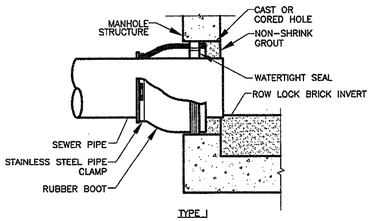

TYPE I

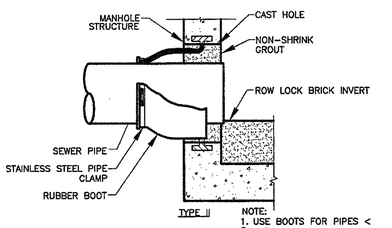

TYPE II

NOTE:
1. USE BOOTS FOR PIPES < 42" DIAMETER
2. TYPE I IS FOR MECHANICALLY ATTACHED TYPE BOOTS.
3. TYPE II IS FOR CAST-IN BOOTS

BOOT CONNECTION
NTS

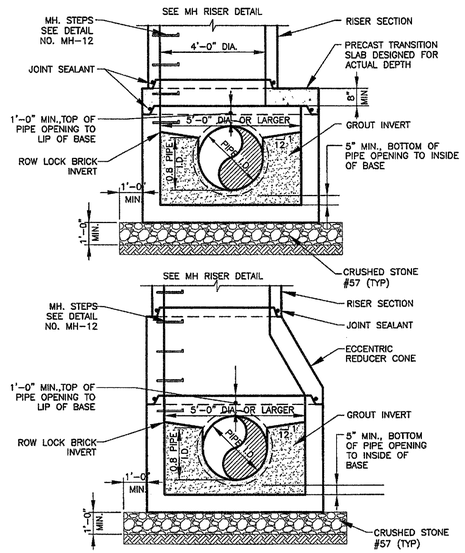

LARGE DIAMETER MANHOLE BASE
NTS

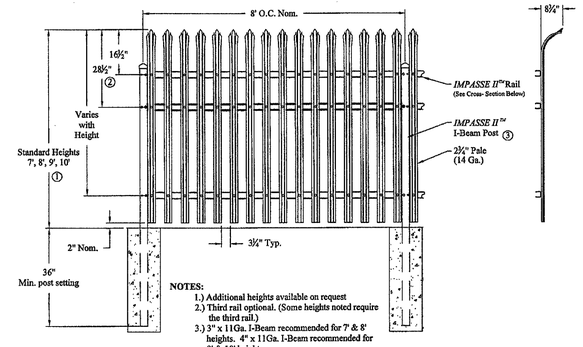

NOTES:
1.) Additional heights available on request
2.) Third rail optional. (Some heights noted require the third rail.)
3.) 3" x 11Ga. I-Beam recommended for 7' & 8' heights. 4" x 11Ga. I-Beam recommended for 9' & 10' heights.

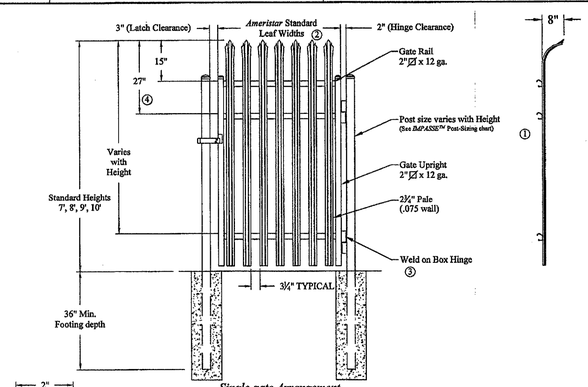

Single gate Arrangement

NOTES:
1.) Post size depends on fence height, weight and wind loads. See IMPASSE™ post sizing chart.
2.) See *Ameristar* gate table for standard out to outs. Custom gate openings available for special out to out/leaf widths.
3.) Additional styles of gate hardware are available on request. This could change the Latch & Hinge Clearance.
4.) Third rail optional. (Some heights noted require the third rail.)

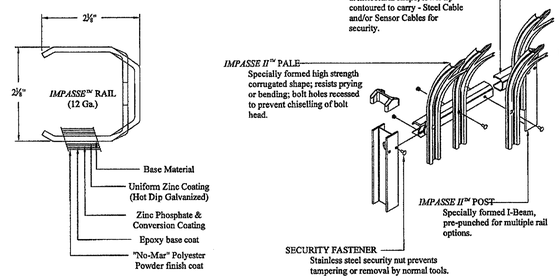

ANTI-RAM HIGH SECURITY STEEL FENCE
NTS

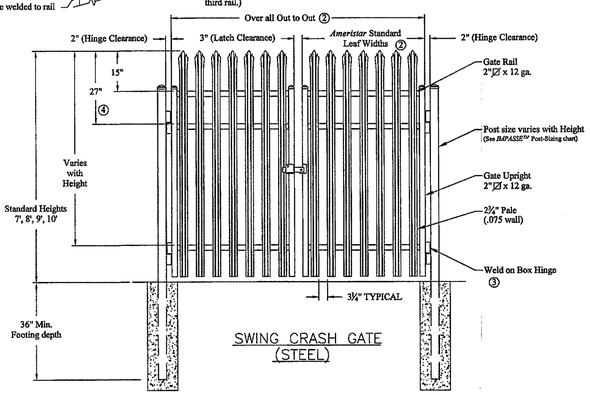

SWING CRASH GATE (STEEL)

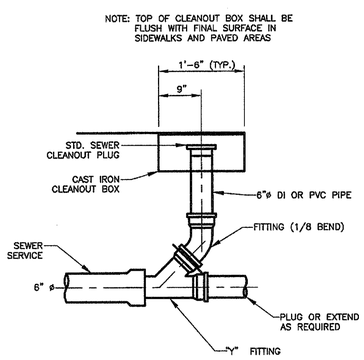

SERVICE CONNECTION CLEANOUT
NTS

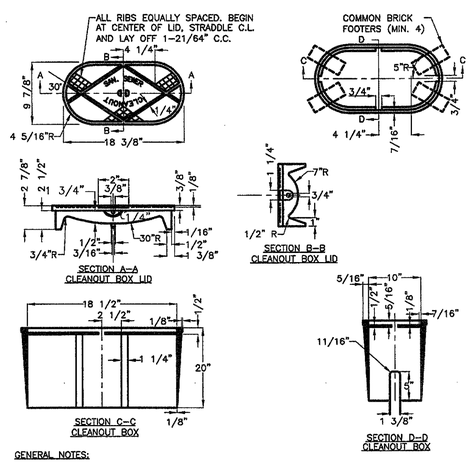

GENERAL NOTES:
1. UNLESS NOTED OTHERWISE, CAST IRON SHALL CONFORM TO A.S.T.M. SPECIFICATIONS A48 LATEST REVISION FOR CLASS 20 GREY IRON CASTINGS.
2. CASTINGS SHALL BE TRUE AND FREE OF HOLES. THEY SHALL BE CLEANED ACCORDING TO GOOD FOUNDRY PRACTICE, CHIPPED AND GROUND AS NEEDED TO REMOVE FINS AND ROUGH PLACES.
3. FINISHED CASTINGS SHALL BE COATED INSIDE AND OUTSIDE WITH COAL TAR PITCH VARNISH AS INDICATED IN A.W.W.A. SPECIFICATIONS C110, LATEST REVISION. COATING MAY BE APPLIED COLD AND SHALL BE SMOOTH, GLOSSY, NOT BRITTLE WHEN COLD, NOT STICKY WHEN EXPOSED TO THE SUN, AND SHALL ADHERE TO THE METAL AT ALL TEMPERATURES.
4. WHEN COATING IS COMPLETE, LID SHALL FIT SNUGLY WITHOUT ROCKING.

SANITARY CLEANOUT BOX
NTS

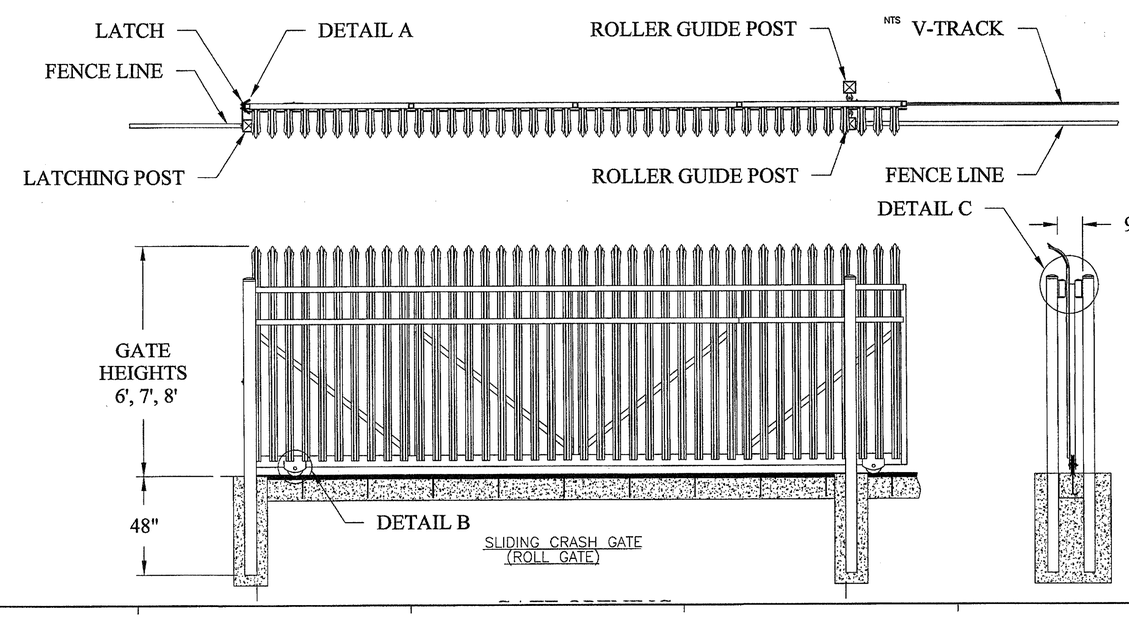

SLIDING CRASH GATE (ROLL GATE)

Atlanta Gas Light

GEORGIA REGISTERED PROFESSIONAL ENGINEER DEREK R. WESTFALL
10/24/12

PEACHTREE CREEK SOUTH FORK RELIEF STORAGE AND PUMPING STATION

CITY OF ATLANTA
DEPARTMENT of WATERSHED MANAGEMENT

REV	DATE	REVISION DESCRIPTION
0	10/28/12	100 PERCENT BID PACKAGE

THIS LINE ——— IS ONE INCH LONG WHEN PLOTTED FULL SCALE

THIS DRAWING MUST BE USED IN CONJUNCTION WITH THE APPLICABLE OR GOVERNING TECHNICAL SPECIFICATIONS AND OTHER CONTRACT DOCUMENTS.

PROJECT NO: FC-6260

DATE: OCTOBER 2012

RESP PROF:	DESIGNER:	CHECKER:
DW	PD	TC

SHEET TITLE
CIVIL
00 - GENERAL
GENERAL DETAILS

SHEET NO. CD-505 REV. 0