CITY OF ATLANTA
DEPARTMENT OF WATERSHED MANAGEMENT
OFFICE OF ENGINEERING SERVICES

CITY OF ATLANTA
KEISHA LANCE BOTTOMS
MAYOR

DEPARTMENT OF WATERSHED MANAGEMENT
KISHIA L. POWELL
COMMISSIONER

LOCATION MAP

SHT#	DWG #	TITLE
1	G-1000	COVER SHEET
2	G-2000	GENERAL NOTES
3	G-3000	OVERALL PROJECT AREA
4	C-300	PROJECT SUMMARY SHEET
5	C-301	PROJECT PLAN VIEW
6	C-302	PROJECT PLAN VIEW
7	C-303	PROJECT PLAN VIEW
8	C-304	PROJECT PLAN VIEW
9	C-305	EROSION AND SEDIMENT CONTROL NOTES
10	C-306	EROSION AND SEDIMENT CONTROL DETAILS
11	C-307	EROSION AND SEDIMENT CONTROL DETAILS
12	C-308	EROSION AND SEDIMENT CONTROL PLAN
13	C-309	EROSION AND SEDIMENT CONTROL PLAN
14	C-310	EROSION AND SEDIMENT CONTROL PLAN
15	C-311	EROSION AND SEDIMENT CONTROL PLAN
16	C-312	STANDARD DETAILS

CONSTRUCTION PLANS
FOR
LOWER PROCTOR CREEK TRUNK SEWER REHABILITATION
NOVEMBER, 2018

PROJECT DESCRIPTION:
THIS PROJECT WILL PROVIDE FOR THE INTERNAL REPAIR OF DEFECTS IN THE EXISTING 54" LOWER PROCTOR CREEK GRAVITY SANITARY TRUNK SEWER BY THE USE OF A FIBER-REINFORCED POLYMER PRODUCT (QUAKEWRAP OR APPROVED EQUAL).

THE DEFECTS TO BE ADDRESSED IN THIS PROJECT HAVE BEEN IDENTIFIED FROM PREVIOUS, INTERNAL CCTV INSPECTIONS OF THE TRUNK SEWER. THESE INSPECTIONS WERE CONDUCTED IN 2004 BY THE CITY OF ATLANTA, AND IN 2017 FOR THE CITY OF ATLANTA BY AMTEC SURVEYING INC. THE DEFECTS IDENTIFIED INCLUDE DETERIORATED AND LEAKING JOINTS, LONGITUDINAL CRACKING AND RADIAL CRACKING.

THE PROJECT INCLUDES THE FOLLOWING WORK: BYPASS PUMPING OF EXISTING SEWER FLOWS; INTERNAL CLEANING OF APPROXIMATELY 13,670 LINEAR FEET OF 54" GRAVITY SANITARY SEWER; REMOVAL AND DISPOSAL OF DEBRIS REMOVED FROM THE SEWER; PRE- AND POST-REHABILITATION CCTV INSPECTION; INTERNAL LINING OF APPROXIMATELY 2,778 FEET OF 54" GRAVITY SEWER WITH FIBER REINFORCED POLYMER (FRP)-MANHOLE TO MANHOLE SEMI-STRUCTURAL REPAIR; INTERNAL LINING OF APPROXIMATELY 345 FEET OF 54" GRAVITY SEWER WITH FIBER REINFORCED POLYMER (FRP)-MANHOLE TO MANHOLE (STRUCTURAL REPAIR); SEALING OF 54" LEAKING JOINT/POINT REPAIR WITH FIBER REINFORCED POLYMER (FRP) REPAIR, AT FORTY-FIVE (45) LOCATIONS (NON STRUCTURAL); EROSION AND SEDIMENTATION CONTROL; TRAFFIC CONTROL AS NECESSARY; ANY OTHER WORK NECESSARY TO PROVIDE THE OWNER WITH A COMPLETED PROJECT.

EROSION NOTE:
EROSION AND SEDIMENT CONTROL BEST MANAGEMENT PRACTICES (BMP'S) WILL BE EMPLOYED AND ENFORCED PURSUANT TO AN EROSION AND SEDIMENT CONTROL PLAN PREPARED BY A GEORGIA SOIL AND WATER CONSERVATION COMMISSION LEVEL-2 DESIGN PROFESSIONAL.
PRIOR TO LAND-DISTURBING ACTIVITIES, THE CONTRACTOR SHALL SCHEDULE A PRE-CONSTRUCTION MEETING WITH THE AREA EROSION CONTROL INSPECTOR. CALL (404) 546-1300 TO CONTACT THE INSPECTOR.

ch2m | ROH&DFOX

811 Know what's below. Call before you dig.

ENGINEER OF RECORD

REVISIONS

NO.	DATE	DESCRIPTION

CITY OF ATLANTA
DEPARTMENT OF WATERSHED MANAGEMENT
OFFICE OF ENGINEERING SERVICES

LOWER PROCTOR SEWER REPAIRS

SURVEYOR	FIELD BOOKS	L.L. DIST.	COUNTY	SCALE
			FULTON	NTS
DRAWN BY G. BOQUIN	DESIGNED BY C. NORRIS	CHECKED BY A. BOYD	APPROVED BY T. KELLEY	DATE NOV 2018

PROJECT NUMBER: 674854 | Sheet : G-1000 | SHEET 1 OF 16

GENERAL NOTES:

1. THIS PROJECT WILL PROVIDE FOR THE INTERNAL REPAIR OF DEFECTS IN THE EXISTING 54" GRAVITY SEWER LINE BY THE USE OF A FIBER REINFORCED POLYMER (FRP) PRODUCT (QUAKEWRAP) OR APPROVED EQUAL. THE PROJECT WILL ALSO REQUIRE BYPASS PUMPING OF THE EXISTING SEWER FLOWS AS NECESSARY TO COMPLETE THE WORK ALONG WITH SEWER CLEANING AND CCTV INSPECTION OF THE LINES AND ANY OTHER WORK NECESSARY TO PROVIDE THE OWNER WITH A COMPLETED PROJECT.

2 . THE DESIGN OF THE SPECIFIC REPAIR SHALL BE PROVIDED BY THE CONTRACTOR. THE SPECIFIC DESIGN FOR THE INDIVIDUAL FRP INTERNAL REPAIRS TO THE PIPELINE SHALL BE DESIGNED AND STAMPED BY AN ENGINEER REGISTERED IN THE STATE OF GEORGIA. THE DETAILED DESIGN CALCULATIONS AND DESIGN ASSUMPTIONS SHALL BE PROVIDED FOR EACH SPECIFIC REPAIR AND SHALL BE SUBMITTED FOR DOCUMENTATION.

3. THESE DRAWINGS ARE SCHEMATIC IN NATURE AND ARE INTENDED TO GENERALLY LOCATE THE MANHOLES AND SEWER LINES ALONG WITH POTENTIAL ACCESS ROUTES TO THE SEWER MANHOLES.

4. NO DETAILED SURVEY WAS OBTAINED FOR THIS PROJECT. THE DRAWINGS ARE SCHEMATIC IN NATURE INDICATING THE GENERAL LOCATION OF THE EXISTING SEWER LINE AND MANHOLES. MANHOLES AND SEWER LINES MAY NOT BE SHOWN IN THE ACTUAL LOCATION.

5. UTILITIES SHOWN (IF ANY) ARE APPROXIMATE. GEORGIA LAW REQUIRES THE CONTRACTOR TO NOTIFY THE UTILITIES PROTECTION CENTER MINIMUM 3 WORKING DAYS BUT NOT MORE THAN 10 DAYS BEFORE BEGINNING CONSTRUCTION. THIS NOTICE WILL REMAIN IN EFFECT FOR 30 WORKING DAYS FROM THE DATE UTILITIES PROTECTION CENTER IS NOTIFIED. IN THE ATLANTA AREA, THE CONTRACTOR IS TO CALL THE UTILITIES PROTECTION CENTER AT 770-623-4344.

6. NO EXCAVATIONS ARE ANTICIPATED FOR THIS PROJECT. ALL WORK IS TO BE COMPLETED FROM WITHIN EXISTING SEWER PIPELINES AND SEWER MANHOLES.

7. THE CONTRACTOR WILL BE REQUIRED TO POSITIVELY LOCATE EXISTING MANHOLES AND PROVIDE CLEARING AND ACCESS WORK TO MANHOLES AS REQUIRED TO COMPLETE THE WORK.

8. CONTRACTOR SHALL HAVE A CONFORMED SET OF PLANS AND SPECIFICATIONS ON THE JOB SITE DURING WORKING HOURS.

9. ALL CONSTRUCTION AND MATERIALS SHALL CONFORM TO THE LATEST CITY OF ATLANTA STANDARDS.

10. SEWER DISTANCES SHOWN ON THE PROFILE DRAWINGS ARE FROM CENTER-TO-CENTER OF THE MANHOLE STRUCTURES AND ARE FOR LAYOUT PURPOSES ONLY. THE INVERTS SHOWN ARE THE THEORETICAL PIPE INVERTS AT THE CENTER OF THE STRUCTURE.

11. THE CONTRACTOR SHALL COORDINATE WORK WITH CITY OF ATLANTA. CONTRACTOR SHALL PROVIDE SUFFICIENT ADVANCE NOTICES OF PROPOSED WORK SCHEDULE AS DEFINED IN THE SPECIFICATIONS.

12. ALL AREAS DISTURBED AND DAMAGED BY THE CONTRACTOR, INCLUDING CURB AND GUTTER, AND TRENCH SETTLEMENT RELATED AREAS, SHALL BE RESTORED TO THE ORIGINAL CONDITIONS TO THE SATISFACTION OF THE CITY OF ATLANTA AND AT NO ADDITIONAL COST TO THE CITY.

13. CONTRACTOR SHALL INSTALL 6-FOOT HIGH TEMPORARY CHAIN LINK FENCE AROUND ALL WORK AREAS AND TO PROVIDE FOR TEMPORARY ENCLOSURE OF YARDS FOR SECURITY OF PETS, DOMESTIC ANIMALS, AND THE PROPERTY WHEN PERMANENT FENCES MUST BE REMOVED DUE TO CONSTRUCTION OF STORM OR SANITARY SEWER LINES.

14. CONTRACTOR SHALL CONSTRUCT AND MAINTAIN EROSION AND SEDIMENT CONTROL DEVICES IN ACCORDANCE WITH "THE MANUAL FOR EROSION AND SEDIMENT CONTROL IN GEORGIA", LATEST EDITION.

15. THE CONTRACTOR SHALL REPLACE ALL FENCING DAMAGED BY CONSTRUCTION. FENCING SHALL BE REPLACED TO ORIGINAL SIZE, QUALITY AND CONDITION, AND TO THE APPROVAL OF THE CITY OF ATLANTA OR ITS AUTHORIZED REPRESENTATIVE.

16. PRIOR TO FINAL ACCEPTANCE OF WORK, CONTRACTOR SHALL PROVIDE "AS-BUILT" MARK-UP PLANS IN ACCORDANCE WITH PARAGRAPH GC-28.4 OF THE GENERAL CONDITIONS TO THE CITY OF ATLANTA ASSIGNED INSPECTOR FOR FINAL INSPECTION OF ALL NEWLY INSTALLED STORM AND SANITARY SEWERS AS WELL AS ELECTRONIC "AS-BUILT" TABLES PER SPECIFICATION SECTION 01720: RECORD DOCUMENTS. AFTER THE FINAL INSPECTION APPROVAL, CONTRACTOR SHALL PROVIDE "AS-BUILT" DRAWINGS TO THE OFFICE OF ENGINEERING SERVICES, UTILITY DESIGN GROUP, PROJECT DESIGN ENGINEER AND ELECTRONIC "AS-BUILT" TABLES TO THE CITY'S CONSENT DECREE PROGRAM DESIGN MANAGER.

17. CONTRACTOR SHALL OBTAIN NECESSARY PERMITS FROM THE CITY OF ATLANTA DEPARTMENT OF PUBLIC WORKS AND IF APPLICABLE, FROM THE GEORGIA DEPARTMENT OF TRANSPORTATION PRIOR TO ANY REQUIRED LANE CLOSURES.

18. CONTRACTOR SHALL INSTALL STEEL COVER PLATES TO PROTECT AREAS, INCLUDING DRIVEWAYS LEFT OPEN AT THE END OF EACH DAY'S WORK. CONTRACTOR SHALL MAINTAIN ACCESS TO DRIVEWAYS AND MAILBOXES AT ALL TIMES.

19. THE LENGTH OF PIPE FOR PAYMENT PURPOSE WILL BE CONSIDERED THE DISTANCE FROM THE CENTER OF MANHOLE TO CENTER OF MANHOLE, SUBTRACTED BY THE WIDTH OF THE MANHOLE.

20. CONTRACTOR SHALL ENTER UPON PRIVATE PROPERTY ONLY AFTER OBTAINING RIGHT OF ENTRY LETTER IN ACCORDANCE WITH PARAGRAPH GC-15 OF THE GENERAL CONDITIONS FROM THE CITY OF ATLANTA AND NOTIFYING HOMEOWNER IN ADVANCE.

21. ALL TRENCHING AND BACKFILL SHALL BE IN ACCORDANCE WITH SECTION 02200 EARTHWORK, SECTION 02730 SEWERS AND ACCESSORIES, AND CITY OF ATLANTA DETAILS. TEMPORARY TRENCH EXCAVATION SHALL AT ALL TIMES CONFORM TO THE SAFETY REQUIREMENTS OF OSHA.

22. AT COMPLETION OF SEWER AND WATER CONSTRUCTION SET ALL MANHOLES, VALVE BOXES, METERS, AND APPURTENANCES FOR PROPER FINAL GRADE. CONTRACTOR SHALL BE RESPONSIBLE FOR DAMAGE TO THE ABOVE ITEMS UNTIL SYSTEM IS ACCEPTED BY THE CITY.

23. ALL NEW MANHOLES ARE PROJECTED. CONTRACTOR MUST VERIFY SEWER ELEVATIONS AT APPROPRIATE LOCATIONS THROUGH VACUUM EXCAVATION.

24. CONTRACTOR SHALL FIELD VERIFY ALL INVERT ELEVATIONS, ANGLES, AND SERVICE STATUS.

25. MANHOLES WITHIN PUBLIC RIGHT-OF-WAY TO BE ABANDONED IN PLACE IN ACCORDANCE WITH ATLANTA SPECIFICATIONS.

26. ALL MANHOLES LOCATED BELOW THE 100 YR FLOOD ELEVATION SHALL HAVE WATERTIGHT FRAME AND COVERS UNLESS SHOWN OTHERWISE.

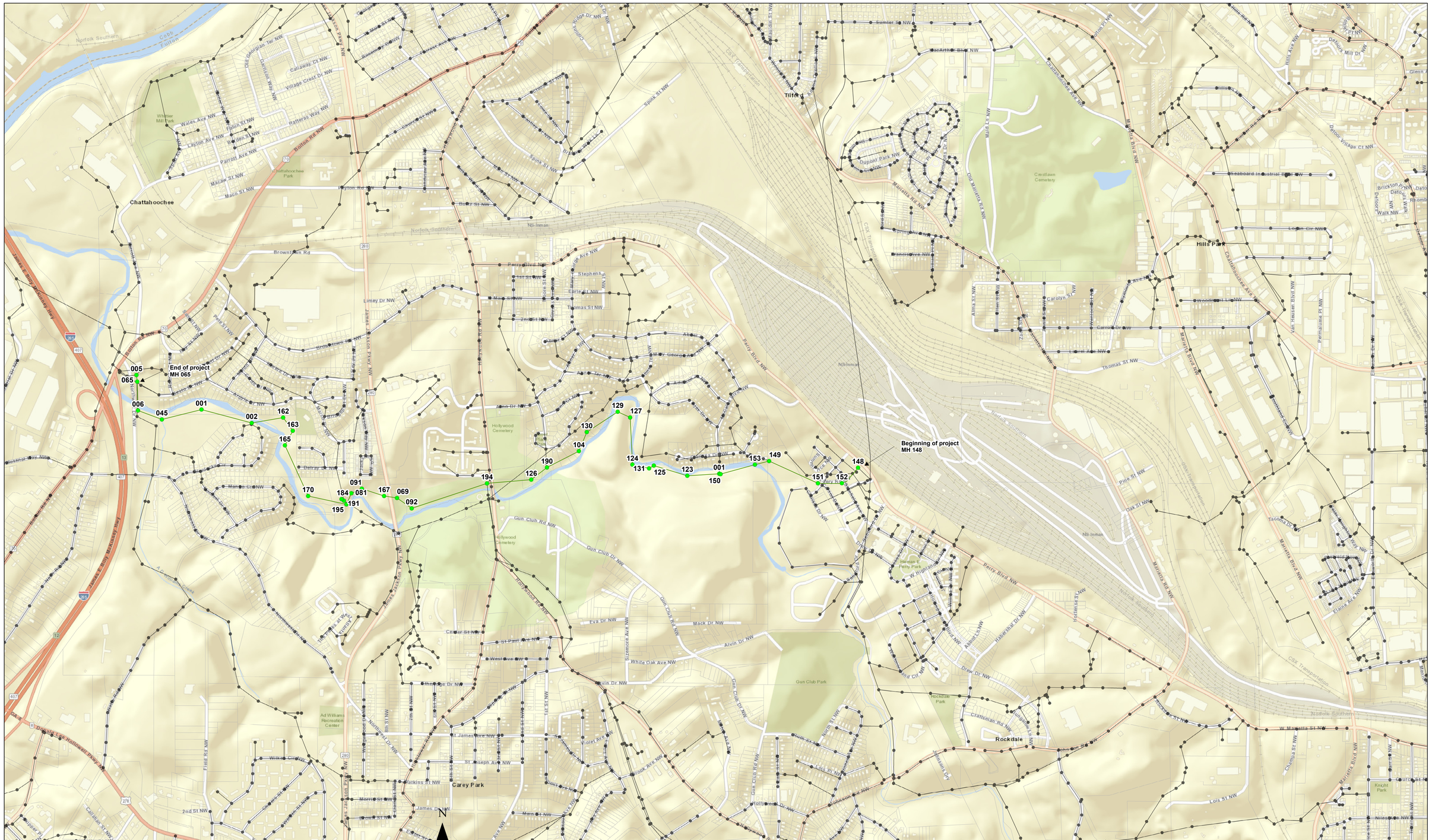

ch2m | ROH&DFOX

811 Know what's below. Call before you dig.

GEORGIA REGISTERED No. 013814 PROFESSIONAL ENGINEER ROY THOMAS KELLEY

ENGINEER OF RECORD

REVISIONS		
NO.	DATE	DESCRIPTION

CITY OF ATLANTA
DEPARTMENT OF WATERSHED MANAGEMENT
OFFICE OF ENGINEERING SERVICES

LOWER PROCTOR SEWER REPAIRS
OVERALL PROJECT AREA

SURVEYOR	FIELD BOOKS	L.L. DIST.	COUNTY FULTON	SCALE NTS
DRAWN BY G. BOQUIN	DESIGNED BY C. NORRIS	CHECKED BY A. BOYD	APPROVED BY T. KELLEY	DATE NOV 2018
PROJECT NUMBER 674854		Sheet: G-3000		SHEET 3 OF 16

LOWER PROCTOR CREEK TRUNK : IDENTIFIED MAINLINE REPAIRS

Trunk/Outfall	SEWERSHED	SEWER GROUP	US MH ID	DS MH ID	US MH	DS MH	LENGTH (LF)	DEPTH (FT)	EXISTING DIAMETER (INCH)	Quakewrap Recommendations
Lower Proctor Creek Trunk	PRC03	3	23080414801	23080415201	148	152	329.6	14.0	54	RELINE with FRP, Semi-Structural ; Stagnant, murky water. Invert not visible. Heavy debris in the pipe. Mild corrosion upstream. Inspection in reverse order (from downstream to upstream)
Lower Proctor Creek Trunk	PRC03	3	23080415201	23080415101	152	151	352.2	8.5	54	No Lining required; Heavy debris (boulders) at 23080415201. MSA at 120 ft.
Lower Proctor Creek Trunk	PRC03	3	23080415101	23080414901	151	149	789.4	17.2	54	Reline with FRP/semi structural
Lower Proctor Creek Trunk	PRC03	3	23080414901	23080415301	149	153	215.0	17.9	54	FRP Point repair at 129 , 210 ft; Stagnant, murky water (~2 ft)nvert not visible.Inspection in reverse order (from downstream to upstream). Heavy debris, MSA at 207 ft.
Lower Proctor Creek Trunk	PRC03	3	23080415301	23080415001	153	150	524.5	18.3	54	FRP Point repair at 187, seal joint at 463 ft; Stagnant, murky water (~ 2 ft). Heavy debris in the pipe
Lower Proctor Creek Trunk	PRC03	3	23080415001	23080400106	150	1	20.2	NA	54	NA
Lower Proctor Creek Trunk	PRC03	3	23080400106	23080412301	1	123	509.0	8.3	54	FRP Point repair 62, 72, seal leak at 413 ft; Invert Not visible.
Lower Proctor Creek Trunk	PRC17_18E	3	23080412301	23080412501	123	125	514.6	8.3	54	FRP Point repair at 25 and 54 ft.
Lower Proctor Creek Trunk	PRC17_18E	3	23080412501	23080413101	125	131	81.1	NA	54	NA; Mild Corrosion
Lower Proctor Creek Trunk	PRC17_18E	3	23080413101	23080412401	131	124	250.1	9.7	54	NA
Lower Proctor Creek Trunk	PRC17_18E	3	23080412401	23080412701	124	127	715.4	18.6	54	Reline with FRP / semi-structural
Lower Proctor Creek Trunk	PRC17_18E	3	23080412701	23080412901	127	129	200.9	18.1	54	NA; ~ 2 ft of water in the pipe with high velocity. Invert not visible. Potential corrosion below the water line due to scour.
Lower Proctor Creek Trunk	PRC17_18E	3	23080412901	23080413001	129	130	544.5	16.5	54	FRP Point repair at 98, 238; Picture not clear, invert not visible beyond 450 ft. Mild corrosion noted at 500+ ft. at 4-5 o'clock.
Lower Proctor Creek Trunk	PRC17_18E	3	23080413001	23080410401	130	104	303.1	15.4	54	NA; Inspection in reverse order (from downstream to upstream). Mild corrosion noted after 250 ft.
Lower Proctor Creek Trunk	PRC17_18E	3	23080410401	23080419003	104	190	530.7	8.1	54	FRP Point repair at 205 and 446 ft. Survey abandoned at protruding tap at 531 ft; Invert Not Visible.
Lower Proctor Creek Trunk	PRC17_18E	3	23080419003	23080412601	190	126	290.1	NA	54	Reline with FRP / semi-structural; Video mislabeled as 23080419001 (US)
Lower Proctor Creek Trunk	PRC17_18E	3	23080412601	23080319403	126	194	653.0	7.9	54	Reline with FRP / semi-structural; Corroded from 4 o'clock to 8 o'clock (SAV/SAP). Leaks (inlcuding a couple of gushers) at multiple joints.
Lower Proctor Creek Trunk	PRC17_18E	3	23080319403	990804092A06	194	092A	584.2	NA	54	FRP Point repair at 38 ft., seal joint at 54, 97, 150, 500, 545, 576, 820 ft. Point repair 630-640 ft., 940-955, 978-986 ft; ~ 2 ft of water in the pipe with high velocity. Invert not visible. Potential corrosion below the water line due to scour.
Lower Proctor Creek Trunk	PRC17_18E	3	990804092A06	23080309201	192A	92	584.2	NA	54	FRP Repairs listed in segment above.
Lower Proctor Creek Trunk	PRC17_18E	3	23080309201	23080306901	92	69	264	13.66	54	FRP Point repair at 28 ft; ~ 2 ft of water in the pipe with high velocity. Invert not visible. Potential corrosion below the water line due to scour.
Lower Proctor Creek Trunk	PRC17_18E	3	23080306901	23080316701	69	167	192.216	13.7	54	FRP Point repair at 12, 116, 185 ft; ~ 2 ft of water in the pipe with high velocity. Invert not visible. Potential corrosion below the water line due to scour.
Lower Proctor Creek Trunk	PRC17_18E	3	23080316701	23080309101	167	91	344.4	9.59	54	Reline / structural; Continuous cracking along 12 o'clock.
Lower Proctor Creek Trunk	PRC17_18E	3	23080309101	23080308101	91	81	167.237	19.335	54	FRP Point repair at 12, 40 ft; ~ 2 ft of water in the pipe with high velocity. Invert not visible. Potential corrosion below the water line due to scour.
Lower Proctor Creek Trunk	PRC17_18E	3	23080308101	23080319503	81	195	178.526	17.515	54	Point Repair at 10.9 ft.
Lower Proctor Creek Trunk	PRC17_18E	3	23080319503	23080317001	195	170	592.5	7.7	54	FRP, Seal joint at 86, 468, point repair at 216 ft; ~ 2 ft of water in the pipe with high velocity. Invert not visible. Potential corrosion below the water line due to scour.
Lower Proctor Creek Trunk	PRC17_18E	3	23080317001	23080316501	170	165	820.4	7.32	54	FRP, Seal joints at 130, and 256 ft;~ 1 ft of water in the pipe with high velocity. Invert not visible. Scour/corrosion possible below water line.
Lower Proctor Creek Trunk	PRC17_18E	3	23080316501	23080316301	165	163	242.828	15.22	54	NA; ~ 1 ft of water in the pipe with high velocity. Invert not visible. Scour/corrosion possible below water line.
Lower Proctor Creek Trunk	PRC17_18E	3	23080316301	23080316201	163	162	241.125	16.17	54	FRP, Seal joint at 115, 154 ft; ~ 1 ft of water in the pipe with high velocity. Invert not visible. Scour/corrosion possible below water line.
Lower Proctor Creek Trunk	PRC17_18E	3	23080316201	23080300201	162	2	468.5	18.94	54	FRP, IPR- 2 locations, verify in field.
Lower Proctor Creek Trunk	PRC17_18E	3	23080300201	23080300101	2	1	764.7	20.24	54	FRP, IPR-4 Locations, Repair at 120' and 407' Seal Joints at 97' and 120'
Lower Proctor Creek Trunk	PRC17_18E	3	23080300101	13980404501	2	45	601.3	18.47	54	FRP, IPR-1 Location, Seal Joint at 42'
Lower Proctor Creek Trunk	PRC17_18E	3	13980404501	13980400601	45	6	374.9	8.9	54	FRP, IPR-2 Locations, Seal Joint at 6' and 28'
Lower Proctor Creek Trunk	PRC17_18E	3	13980400601	13980406501	6	65	423.9	19.2	54	FRP, IPR-1 Location, Seal Joint at 167'

Existing Manhole Table

Manhole	Work	US MH ID	Northing	Easting	DEPTH (FT)	EXISTING SEWER MAIN DIAMETER (INCH)
148	RETAIN	23080414801	1381234.253	2209931.84	14.0	54
152	RETAIN	23080415201	1381279.297	2209694.458	8.5	54
151	RETAIN	23080415101	1381004.724	2209342.246	17.2	54
149	RETAIN	23080414901	1381332.376	2208624.088	17.9	54
153	RETAIN	23080415301	1381279.297	2208415.776	18.3	54
150	RETAIN	23080415001	1381140.425	2207910.006	NA	54
1	RETAIN	23080400106	NA	NA	8.3	54
123	RETAIN	23080412301	1381114.799	2207420.542	8.3	54
125	RETAIN	23080412501	1381265.146	2206928.363	NA	54
131	RETAIN	23080413101	NA	NA	9.7	54
124	RETAIN	23080412401	1381279.235	2206613.718	18.6	54
127	RETAIN	23080412701	1381973.899	2206579.6	18.1	54
129	RETAIN	23080412901	1382056.905	2206396.663	16.5	54
130	RETAIN	23080413001	1381758.286	2205941.367	15.4	54
104	RETAIN	23080410401	1381478.255	2205825.365	8.1	54
190	RETAIN	23080419003	NA	NA	NA	54
126	RETAIN	23080412601	1381058.064	2205124.787	7.9	54
194	RETAIN	23080319403	NA	NA	NA	54
192A	RETAIN	990804092A06	NA	NA	NA	54
92	RETAIN	23080309201	1380636.346	2203365.109	13.66	54
69	RETAIN	23080306901	1380789.606	2203150.124	13.7	54
167	RETAIN	23080316701	1380817.197	2202959.899	9.59	54
91	RETAIN	23080309101	1380923.498	2202632.269	19.335	54
81	RETAIN	23080308101	1380857.63	2202478.117	17.515	54
195	RETAIN	23080319503	NA	NA	7.7	54
170	RETAIN	23080317001	1380817.369	2201842.422	7.32	54
165	RETAIN	23080316501	1381563.312	2201501.001	15.22	54
163	RETAIN	23080316301	1381776.882	2201616.558	16.17	54
162	RETAIN	23080316201	1381971.746	2201474.539	18.94	54
2	RETAIN	23080300201	1381892.725	2201012.724	20.24	54
2	RETAIN	23080300101	1382089.582	2200273.78	18.47	54
45	RETAIN	13980404501	1381944.773	2199690.207	8.9	54
6	RETAIN	13980400601	1382075.741	2199338.913	19.2	54

ch2m | ROH&DFOX

811 Know what's below. Call before you dig.

GEORGIA REGISTERED No. 013814 PROFESSIONAL ENGINEER ROY THOMAS KELLEY

ENGINEER OF RECORD

REVISIONS

NO.	DATE	DESCRIPTION

CITY OF ATLANTA
DEPARTMENT OF WATERSHED MANAGEMENT
OFFICE OF ENGINEERING SERVICES

LOWER PROCTOR SEWER REPAIRS
PROJECT SUMMARY SHEET

SURVEYOR	FIELD BOOKS	L.L. DIST.	COUNTY FULTON	SCALE NTS
DRAWN BY G. BOQUIN	DESIGNED BY C. NORRIS	CHECKED BY A. BOYD	APPROVED BY T. KELLEY	DATE NOV 2018

PROJECT NUMBER 674854 | Sheet: C-300 | SHEET 4 OF 16

GENERAL NOTES:

1. SEE OVERALL SHEET FOR SPECIFIC REPAIR LOCATIONS AND DETAILS. THE REPAIRS ARE TO MADE USING AN INTERNAL REPAIR PROCEDURE USING A FIBERGLAS REINFORCED POLYMER (FRP) PRODUCT USING FIBERGLASS, RESIN AND CARBON FIBER (IF NEEDED) TO EFFECT PERMANENT REPAIRS TO THE EXISTING 54" GRAVITY SEWER LINE.

2. THE CONTRACTOR WILL BE REQUIRED TO PROVIDE ENGINEERING DRAWINGS, DETAILS, AND SPECIFICATIONS GOVERNING THE REPAIR. THESE ARE TO BE STAMPED BY AN ENGINEER REGISTERED IN THE STATE OF GEORGIA.

3. THE CONTRACTOR WILL BE REQUIRED TO CLEAR AND OBTAIN ACCESS TO THE SEWER LINES FOR THIS WORK.

4. THE CITY HAS LIMITED PRIOR CCTV INSPECTION DATA FOR THESE LINE SEGMENTS THAT CAN BE PROVIDED FOR REVIEW.

5. THE FINAL DETERMINATION OF THE SPECIFIC LOCATION AND TYPES OF THE REPAIRS WILL BE DETERMINED BASED ON THE INSPECTION OF THE SEWER LINE AND CONVERSATIONS WITH THE CITY OF ATLANTA.

6. BYPASS PUMPING WILL BE REQUIRED IN ORDER TO COMPLETE THIS WORK. UPSTREAM OF THE TERRELL CREEK INTERCEPTOR, (MH 194) THE CITY OF ATLANTA HAS THE CAPABILITY TO REDUCE WASTEWATER FLOWS TO THE LOWER PROCTOR SEWER CREEK TRUNK SEWER.

SEE SPECIFICATIONS

7. THIS PROJECT WILL PROVIDE FOR THE INTERNAL REPAIR OF DEFECTS IN THE EXISTING 54" GRAVITY SEWER LINE BY THE USE OF A FIBER REINFORCED POLYMER (FRP) PRODUCT (QUAKEWRAP) OR APPROVED EQUAL.
THE PROJECT WILL ALSO REQUIRE BYPASS PUMPING OF THE EXISTING SEWER FLOWS AS NECESSARY TO COMPLETE THE WORK ALONG WITH SEWER CLEANING AND CCTV INSPECTION OF THE LINES AND ANY OTHER WORK NECESSARY TO PROVIDE THE OWNER WITH A COMPLETED PROJECT.

8. THE DESIGN OF THE SPECIFIC REPAIR SHALL BE PROVIDED BY THE CONTRACTOR. THE SPECIFIC DESIGN FOR THE INDIVIDUAL FRP INTERNAL REPAIRS TO THE PIPELINE SHALL BE DESIGNED AND STAMPED BY AN ENGINEER REGISTERED IN THE STATE OF GEORGIA. THE DETAILED DESIGN CALCULATIONS AND DESIGN ASSUMPTIONS SHALL BE PROVIDED FOR EACH SPECIFIC REPAIR AND SHALL BE SUBMITTED FOR DOCUMENTATION.

N

0 50 100
Feet

Legend

- LOWER PROCTOR MANHOLES
- SANITARY SEWER STRUCTURE
- CAST IRON
- DUCTILE IRON
- FLOW
- PROCTOR CREEK
- MATCHLINE

AccessPoints

- LOWER PROCTOR PIPES
- SANITARY SEWER MAIN
- PARCEL
- LIMITS OF CONSTRUCTION

ch2m | ROH&DFOX
A JOINT VENTURE

811
Know what's below.
Call before you dig.

GEORGIA REGISTERED No. 013814 PROFESSIONAL ENGINEER ROY THOMAS KELLEY

ENGINEER OF RECORD

REVISIONS		
NO.	DATE	DESCRIPTION

CITY OF ATLANTA
DEPARTMENT OF WATERSHED MANAGEMENT
OFFICE OF ENGINEERING SERVICES

LOWER PROCTOR SEWER REPAIRS
PROJECT PLAN VIEW

SURVEYOR	FIELD BOOKS	L.L. DIST.	COUNTY FULTON	SCALE NTS
DRAWN BY G. BOQUIN	DESIGNED BY C. NORRIS	CHECKED BY A. BOYD	APPROVED BY T. KELLEY	DATE NOV 2018
PROJECT NUMBER 674854		Sheet : C-301		SHEET 5 OF 16

GENERAL NOTES:

1. SEE OVERALL SHEET FOR SPECIFIC REPAIR LOCATIONS AND DETAILS. THE REPAIRS ARE TO MADE USING AN INTERNAL REPAIR PROCEDURE USING A FIBERGLAS REINFORCED POLYMER (FRP) PRODUCT USING FIBERGLASS, RESIN AND CARBON FIBER (IF NEEDED) TO EFFECT PERMANENT REPAIRS TO THE EXISTING 54" GRAVITY SEWER LINE.

2. THE CONTRACTOR WILL BE REQUIRED TO PROVIDE ENGINEERING DRAWINGS, DETAILS, AND SPECIFICATIONS GOVERNING THE REPAIR. THESE ARE TO BE STAMPED BY AN ENGINEER REGISTERED IN THE STATE OF GEORGIA.

3. THE CONTRACTOR WILL BE REQUIRED TO CLEAR AND OBTAIN ACCESS TO THE SEWER LINES FOR THIS WORK.

4. THE CITY HAS LIMITED PRIOR CCTV INSPECTION DATA FOR THESE LINE SEGMENTS THAT CAN BE PROVIDED FOR REVIEW.

5. THE FINAL DETERMINATION OF THE SPECIFIC LOCATION AND TYPES OF THE REPAIRS WILL BE DETERMINED BASED ON THE INSPECTION OF THE SEWER LINE AND CONVERSATIONS WITH THE CITY OF ATLANTA.

6. BYPASS PUMPING WILL BE REQUIRED IN ORDER TO COMPLETE THIS WORK. UPSTREAM OF THE TERRELL CREEK INTERCEPTOR, (MH 194) THE CITY OF ATLANTA HAS THE CAPABILITY TO REDUCE WASTEWATER FLOWS TO THE LOWER PROCTOR SEWER CREEK TRUNK SEWER.

SEE SPECIFICATIONS

7. THIS PROJECT WILL PROVIDE FOR THE INTERNAL REPAIR OF DEFECTS IN THE EXISTING 54" GRAVITY SEWER LINE BY THE USE OF A FIBER REINFORCED POLYMER (FRP) PRODUCT (QUAKEWRAP) OR APPROVED EQUAL.
THE PROJECT WILL ALSO REQUIRE BYPASS PUMPING OF THE EXISTING SEWER FLOWS AS NECESSARY TO COMPLETE THE WORK ALONG WITH SEWER CLEANING AND CCTV INSPECTION OF THE LINES AND ANY OTHER WORK NECESSARY TO PROVIDE THE OWNER WITH A COMPLETED PROJECT.

8. THE DESIGN OF THE SPECIFIC REPAIR SHALL BE PROVIDED BY THE CONTRACTOR. THE SPECIFIC DESIGN FOR THE INDIVIDUAL FRP INTERNAL REPAIRS TO THE PIPELINE SHALL BE DESIGNED AND STAMPED BY AN ENGINEER REGISTERED IN THE STATE OF GEORGIA. THE DETAILED DESIGN CALCULATIONS AND DESIGN ASSUMPTIONS SHALL BE PROVIDED FOR EACH SPECIFIC REPAIR AND SHALL BE SUBMITTED FOR DOCUMENTATION.

N

0 50 100
Feet

Legend

- LOWER PROCTOR MANHOLES
- SANITARY SEWER STRUCTURE
- CAST IRON
- DUCTILE IRON
- FLOW
- PROCTOR CREEK
- MATCHLINE

AccessPoints

- LOWER PROCTOR PIPES
- SANITARY SEWER MAIN
- PARCEL
- LIMITS OF CONSTRUCTION

ch2m | ROH&DFOX
A JOINT VENTURE

811
Know what's below.
Call before you dig.

GEORGIA REGISTERED No. 013814 PROFESSIONAL ENGINEER ROY THOMAS KELLEY

ENGINEER OF RECORD

REVISIONS		
NO.	DATE	DESCRIPTION

CITY OF ATLANTA
DEPARTMENT OF WATERSHED MANAGEMENT
OFFICE OF ENGINEERING SERVICES

LOWER PROCTOR SEWER REPAIRS
PROJECT PLAN VIEW

SURVEYOR	FIELD BOOKS	L.L. DIST.	COUNTY	SCALE
			FULTON	NTS
DRAWN BY	DESIGNED BY	CHECKED BY	APPROVED BY	DATE
G. BOQUIN	C. NORRIS	A. BOYD	T. KELLEY	NOV 2018

PROJECT NUMBER 674854 | Sheet : C-302 | SHEET 6 OF 16

GENERAL NOTES:

1. SEE OVERALL SHEET FOR SPECIFIC REPAIR LOCATIONS AND DETAILS. THE REPAIRS ARE TO MADE USING AN INTERNAL REPAIR PROCEDURE USING A FIBERGLAS REINFORCED POLYMER (FRP) PRODUCT USING FIBERGLASS, RESIN AND CARBON FIBER (IF NEEDED) TO EFFECT PERMANENT REPAIRS TO THE EXISTING 54" GRAVITY SEWER LINE.

2. THE CONTRACTOR WILL BE REQUIRED TO PROVIDE ENGINEERING DRAWINGS, DETAILS, AND SPECIFICATIONS GOVERNING THE REPAIR. THESE ARE TO BE STAMPED BY AN ENGINEER REGISTERED IN THE STATE OF GEORGIA.

3. THE CONTRACTOR WILL BE REQUIRED TO CLEAR AND OBTAIN ACCESS TO THE SEWER LINES FOR THIS WORK.

4. THE CITY HAS LIMITED PRIOR CCTV INSPECTION DATA FOR THESE LINE SEGMENTS THAT CAN BE PROVIDED FOR REVIEW.

5. THE FINAL DETERMINATION OF THE SPECIFIC LOCATION AND TYPES OF THE REPAIRS WILL BE DETERMINED BASED ON THE INSPECTION OF THE SEWER LINE AND CONVERSATIONS WITH THE CITY OF ATLANTA.

6. BYPASS PUMPING WILL BE REQUIRED IN ORDER TO COMPLETE THIS WORK. UPSTREAM OF THE TERRELL CREEK INTERCEPTOR, (MH 194) THE CITY OF ATLANTA HAS THE CAPABILITY TO REDUCE WASTEWATER FLOWS TO THE LOWER PROCTOR SEWER CREEK TRUNK SEWER.

SEE SPECIFICATIONS

7. THIS PROJECT WILL PROVIDE FOR THE INTERNAL REPAIR OF DEFECTS IN THE EXISTING 54" GRAVITY SEWER LINE BY THE USE OF A FIBER REINFORCED POLYMER (FRP) PRODUCT (QUAKEWRAP) OR APPROVED EQUAL.
THE PROJECT WILL ALSO REQUIRE BYPASS PUMPING OF THE EXISTING SEWER FLOWS AS NECESSARY TO COMPLETE THE WORK ALONG WITH SEWER CLEANING AND CCTV INSPECTION OF THE LINES AND ANY OTHER WORK NECESSARY TO PROVIDE THE OWNER WITH A COMPLETED PROJECT.

8. THE DESIGN OF THE SPECIFIC REPAIR SHALL BE PROVIDED BY THE CONTRACTOR. THE SPECIFIC DESIGN FOR THE INDIVIDUAL FRP INTERNAL REPAIRS TO THE PIPELINE SHALL BE DESIGNED AND STAMPED BY AN ENGINEER REGISTERED IN THE STATE OF GEORGIA. THE DETAILED DESIGN CALCULATIONS AND DESIGN ASSUMPTIONS SHALL BE PROVIDED FOR EACH SPECIFIC REPAIR AND SHALL BE SUBMITTED FOR DOCUMENTATION.

N

0 50 100
Feet

Legend

- LOWER PROCTOR MANHOLES
- SANITARY SEWER STRUCTURE
- CAST IRON
- DUCTILE IRON
- FLOW
- PROCTOR CREEK
- MATCHLINE

AccessPoints

- LOWER PROCTOR PIPES
- SANITARY SEWER MAIN
- PARCEL
- LIMITS OF CONSTRUCTION

ch2m | ROH&FOX

811 Know what's below. Call before you dig.

GEORGIA REGISTERED No. 013814 PROFESSIONAL ENGINEER ROY THOMAS KELLEY

ENGINEER OF RECORD

REVISIONS		
NO.	DATE	DESCRIPTION

CITY OF ATLANTA
DEPARTMENT OF WATERSHED MANAGEMENT
OFFICE OF ENGINEERING SERVICES

LOWER PROCTOR SEWER REPAIRS
PROJECT PLAN VIEW

SURVEYOR	FIELD BOOKS	L.L. DIST.	COUNTY FULTON	SCALE NTS
DRAWN BY G. BOQUIN	DESIGNED BY C. NORRIS	CHECKED BY A. BOYD	APPROVED BY T. KELLEY	DATE NOV 2018
PROJECT NUMBER 674854		Sheet : C-303		SHEET 7 OF 16

GENERAL NOTES:

1. SEE OVERALL SHEET FOR SPECIFIC REPAIR LOCATIONS AND DETAILS. THE REPAIRS ARE TO MADE USING AN INTERNAL REPAIR PROCEDURE USING A FIBERGLAS REINFORCED POLYMER (FRP) PRODUCT USING FIBERGLASS, RESIN AND CARBON FIBER (IF NEEDED) TO EFFECT PERMANENT REPAIRS TO THE EXISTING 54" GRAVITY SEWER LINE.

2. THE CONTRACTOR WILL BE REQUIRED TO PROVIDE ENGINEERING DRAWINGS, DETAILS, AND SPECIFICATIONS GOVERNING THE REPAIR. THESE ARE TO BE STAMPED BY AN ENGINEER REGISTERED IN THE STATE OF GEORGIA.

3. THE CONTRACTOR WILL BE REQUIRED TO CLEAR AND OBTAIN ACCESS TO THE SEWER LINES FOR THIS WORK.

4. THE CITY HAS LIMITED PRIOR CCTV INSPECTION DATA FOR THESE LINE SEGMENTS THAT CAN BE PROVIDED FOR REVIEW.

5. THE FINAL DETERMINATION OF THE SPECIFIC LOCATION AND TYPES OF THE REPAIRS WILL BE DETERMINED BASED ON THE INSPECTION OF THE SEWER LINE AND CONVERSATIONS WITH THE CITY OF ATLANTA.

6. BYPASS PUMPING WILL BE REQUIRED IN ORDER TO COMPLETE THIS WORK. UPSTREAM OF THE TERRELL CREEK INTERCEPTOR, (MH 194) THE CITY OF ATLANTA HAS THE CAPABILITY TO REDUCE WASTEWATER FLOWS TO THE LOWER PROCTOR SEWER CREEK TRUNK SEWER.

SEE SPECIFICATIONS

7. THIS PROJECT WILL PROVIDE FOR THE INTERNAL REPAIR OF DEFECTS IN THE EXISTING 54" GRAVITY SEWER LINE BY THE USE OF A FIBER REINFORCED POLYMER (FRP) PRODUCT (QUAKEWRAP) OR APPROVED EQUAL.
THE PROJECT WILL ALSO REQUIRE BYPASS PUMPING OF THE EXISTING SEWER FLOWS AS NECESSARY TO COMPLETE THE WORK ALONG WITH SEWER CLEANING AND CCTV INSPECTION OF THE LINES AND ANY OTHER WORK NECESSARY TO PROVIDE THE OWNER WITH A COMPLETED PROJECT.

8. THE DESIGN OF THE SPECIFIC REPAIR SHALL BE PROVIDED BY THE CONTRACTOR. THE SPECIFIC DESIGN FOR THE INDIVIDUAL FRP INTERNAL REPAIRS TO THE PIPELINE SHALL BE DESIGNED AND STAMPED BY AN ENGINEER REGISTERED IN THE STATE OF GEORGIA. THE DETAILED DESIGN CALCULATIONS AND DESIGN ASSUMPTIONS SHALL BE PROVIDED FOR EACH SPECIFIC REPAIR AND SHALL BE SUBMITTED FOR DOCUMENTATION.

N

0 50 100
Feet

Legend

- LOWER PROCTOR MANHOLES
- SANITARY SEWER STRUCTURE
- CAST IRON
- DUCTILE IRON
- FLOW
- PROCTOR CREEK
- MATCHLINE

AccessPoints

- LOWER PROCTOR PIPES
- SANITARY SEWER MAIN
- PARCEL
- LIMITS OF CONSTRUCTION

ch2m | ROH&DFOX
A JOINT VENTURE

811
Know what's below.
Call before you dig.

GEORGIA REGISTERED No. 013814 PROFESSIONAL ENGINEER ROY THOMAS KELLEY

ENGINEER OF RECORD

REVISIONS

NO.	DATE	DESCRIPTION

CITY OF ATLANTA
DEPARTMENT OF WATERSHED MANAGEMENT
OFFICE OF ENGINEERING SERVICES

LOWER PROCTOR SEWER REPAIRS
PROJECT PLAN VIEW

SURVEYOR	FIELD BOOKS	L.L. DIST.	COUNTY	SCALE
			FULTON	NTS
DRAWN BY	DESIGNED BY	CHECKED BY	APPROVED BY	DATE
G. BOQUIN	C. NORRIS	A. BOYD	T. KELLEY	NOV 2018

PROJECT NUMBER 674854 | Sheet : C-304 | SHEET 8 OF 16

CERTIFICATIONS

DESIGN PROFESSIONAL

√ 11 1. I CERTIFY UNDER PENALTY OF LAW THAT THIS PLAN WAS PREPARED AFTER A SITE VISIT TO THE LOCATIONS DESCRIBED HEREIN BY MYSELF OR MY AUTHORIZED AGENT, UNDER MY SUPERVISION.

NAME: CHRISTOPHER S. HAMBLEN

GEORGIA REGISTERED ENGINEER NO: 038034

LEVEL II CERTIFIED DESIGN PROFESSIONAL NO: 0000069253

SIGNATURE: _____

PROJECT INFORMATION

√ 4 1. PRIMARY PERMITTEE:
NAME: REGINALD CRAYTON
COMPANY: CITY OF ATLANTA, DEPARTMENT OF WATERSHED MANAGEMENT
ADDRESS: 72 MARIETTA STREET NW
CITY/STATE/ZIP: ATLANTA, GA 30303
PHONE: (404) 798-5612

2. ENGINEER:
CH2M
6600 PEACHTREE DUNWOODY ROAD
400 EMBASSY ROW, SUITE 600
ATLANTA GA 30328

√ 3 3. 24-HR CONTACT: REGINALD CRAYTON, (404) 798-5612

√ 5 4. TOTAL PROJECT AREA: 6.4 ACRES
TOTAL DISTURBED AREA: 0.1 ACRES

√ 6 5. GPS LOCATIONS OF PROJECT(WGS84)
BEGINNING OF PROJECT: (33.796778°, -084.451943°)
END OF PROJECT: (33.800443°, -084.486886°)

√ 8 6. PROJECT DESCRIPTION

THIS PROJECT WILL PROVIDE FOR THE INTERNAL REPAIR OF DEFECTS IN THE EXISTING 54" GRAVITY SEWER LINE BY THE USE OF A FIBER REINFORCED POLYMER (FRP) PRODUCT (QUAKEWRAP) OR APPROVED EQUAL. ALL WORK PERFORMED WILL BE THROUGH EXISTING MANHOLES WITHIN CITY EASEMENTS, WITH LIMITED LAND DISTURBANCES. THE PROJECT WILL ALSO REQUIRE BYPASS PUMPING OF THE EXISTING SEWER FLOWS AS NECESSARY TO COMPLETE THE WORK ALONG WITH SEWER CLEANING AND CCTV INSPECTION OF THE LINES AND ANY OTHER WORK NECESSARY TO PROVIDE THE OWNER WITH A COMPLETED PROJECT.

√ 10 7. RECEIVING WATERS

- THE RECEIVING WATERS OF THIS PROJECT IS PROCTOR CREEK, WHICH IS PART OF THE UPPER CHATTAHOOCHEE WATERSHED (HUC-03130001).
- PROCTOR CREEK IS AN IMPARED STREAM SEGMENT AS DEFINED IN THE 2016 GEORGIA EPD 305(B)/303(D) LIST.
- A TMDL IMPLEMENTATION PLAN FOR FECAL COLIFORM WAS DEVELOPED FOR PROCTOR CREEK IN 2003, REVISED 2008. A TMDL IMPLEMENTATION PLAN FOR SEDIMENT HAS NOT BEEN DEVELOPED FOR PROCTOR CREEK.

8. BASE FLOOD INFORMATION
MAP NUMBER: 13121C
PANEL NUMBER: 0236F, 0237F
REVISED: SEPTEMBER 18, 2013

√ 46 9. SOILS TYPE

AS PER NRCS WEB SOIL SURVEY, SOIL TYPES FOR THIS PROJECT ARE DELINEATED IN THE C SERIES SHEETS. SOIL TYPE LEGEND (WITH DESCRIPTIONS) IS PROVIDED ON SHEETS C-308 TO C-311.

√ 41 10. WETLANDS

THE PRESENCE OF ON-SITE WETLANDS HAS BEEN INVESTIGATED AND IT WAS DETERMINED THERE ARE NO WETLANDS WITHIN THE PROJECT AREA.

√ 41 11. STATE WATERS

STATE WATERS LOCATED ON AND WITHIN 200 FEET OF THE PROJECT SITE HAVE BEEN IDENTIFIED AND WILL BE PROTECTED BY ASSOCIATED STATE AND CITY PROTECTION REGULATIONS AND BUFFERS.

√ 44 12. RUNOFF COEFFICIENT OR PEAK DISCHARGE FLOWS OF THE SITE PRIOR TO AND AFTER CONSTRUCTION ACTIVITIES ARE COMPLETED SHALL STAY THE SAME. THE PROPOSED WORK DOES NOT ALTER THE HYDROLOGY OF THE SITE.

√ 48 13. WRITTEN JUSTIFICATION AGAINST SEDIMENT BASIN IMPLEMENTATION: THE TOPOGRAPHY OF THE SITE, AS WELL CONSTRUCTION TECHNIQUES, LIMITS THE LAND DISTURBANCE ACTIVITIES TO A NARROW AND NON-CONTINUOUS LINEAR AREAS. THIS ELIMINATES THE OPPORTUNITY TO USE A CENTRALIZED SEDIMENT STORAGE BMP TO ADEQUATELY TREAT SEDIMENT POLLUTION. TO MEET THE GOALS OF LIMITING SEDIMENT POLLUTION, THE SEDIMENT CONTROL PROGRAM WILL BE EXECUTED BY THE CONTRACTOR IN COORDINATION WITH LIMITING LAND DISTURBANCE AS SPECIFIED IN THIS PLAN SET AT ANY GIVEN TIME: BEFORE, DURING, AND AFTER CONSTRUCTION.

REQUIRED ES&CP NOTES (CITY OF ATLANTA REQUIRED NOTES INCLUDED AS SHOWN IN BOLD)

√ 15 1. NON-EXEMPT ACTIVITIES SHALL NOT BE CONDUCTED WITHIN THE 25 OR 50-FOOT UNDISTURBED STREAM BUFFERS AS MEASURED FROM THE POINT OF WRESTED VEGETATION OR WITHIN 25-FEET OF THE COASTAL MARSHLAND BUFFER AS MEASURED FROM THE JURISDICTIONAL DETERMINATION LINE WITHOUT FIRST ACQUIRING THE NECESSARY VARIANCES AND PERMITS.

√ 16 1.B BUFFER VARIANCE IS NOT REQUIRED FOR THIS PROJECT. NO WORK IS REQUIRED WITHIN THE 25-FOOT GAEPD STREAM BUFFER. THE EXTENT OF THE BUFFER IS SHOWN ON PAGES C-308 THROUGH C-311.

√ 25 2. SPILL CLEANUP AND CONTROL PRACTICES

2.1. LOCAL, STATE AND MANUFACTURER'S RECOMMENDED METHODS FOR SPILL CLEANUP WILL BE CLEARLY POSTED AND PROCEDURES WILL BE MADE TO SITE PERSONNEL.

2.2. MATERIAL AND EQUIPMENT NECESSARY FOR SPILL CLEANUP WILL BE KEPT IN THE MATERIAL STORAGE AREAS. TYPICAL MATERIALS AND EQUIPMENT INCLUDES, BUT IS NOT LIMITED TO, BROOMS, DUSTPANS, MOPS, RAGS, GLOVES, GOGGLES, CAT LITTER, SAND, SAWDUST AND PROPERLY LABELED PLASTIC AND METAL WASTE CONTAINERS.

2.3. SPILL PREVENTION PRACTICES AND PROCEDURES WILL BE REVIEWED AFTER A SPILL AND ADJUSTED AS NECESSARY TO PREVENT FUTURE SPILLS. ALL SPILLS WILL BE CLEANED UP IMMEDIATELY UPON DISCOVERY. ALL SPILLS WILL BE REPORTED AS REQUIRED BY LOCAL, STATE AND FEDERAL REGULATIONS.

2.4. FOR SPILLS THAT IMPACT SURFACE WATER (LEAVE A SHEEN ON SURFACE WATER), THE NATIONAL RESPONSE CENTER (NRC) WILL BE CONTACTED WITHIN 24 HOURS AT 1-800-424-8802.

a. FOR SPILLS OF AN UNKNOWN AMOUNT, THE NATIONAL CENTER (NRC) WILL BE CONTACTED WITHIN 24 HOURS AT 1-800-424-8802.
b. FOR SPILLS GREATER THAN 25 GALLONS AND NO SURFACE WATER IMPACTS, THE GEORGIA EPD WILL BE CONTACTED WITHIN 24 HOURS.
c. FOR SPILLS LESS THAN 25 GALLONS AND NO SURFACE WATER IMPACTS, THE SPILL WILL BE CLEANED UP AND LOCAL AGENCIES WILL BE CONTACTED AS REQUIRED.

2.5 THE CONTRACTOR SHALL NOTIFY THE LICENSED PROFESSIONAL WHO PREPARED THIS PLAN IF MORE THAN 1,320 GALLONS OF PETROLEUM IS STORED ONSITE (THIS INCLUDES CAPACITIES OF EQUIPMENT) OR IF ANY ONE PIECE OF EQUIPMENT HAS A CAPACITY GREATER THAN 660 GALLONS. THE CONTRACTOR WILL NEED A SPILL PREVENTION CONTAINMENT AND COUNTERMEASURES PLAN PREPARED BY THAT LICENSED PROFESSIONAL.

√ 19 **3. THE ESCAPE OF SEDIMENT FROM THE SITE SHALL BE PREVENTED BY THE INSTALLATION OF EROSION AND SEDIMENT CONTROL MEASURES AND PRACTICES PRIOR TO LAND DISTURBING ACTIVITIES.**

√ 20 **4. EROSION CONTROL MEASURES WILL BE MAINTAINED AT ALL TIMES. IF FULL IMPLEMENTATION OF THE APPROVED PLAN DOES NOT PROVIDE FOR EFFECTIVE EROSION CONTROL, ADDITIONAL EROSION AND SEDIMENT CONTROL MEASURES SHALL BE IMPLEMENTED TO CONTROL OR TREAT THE SEDIMENT SOURCE.**

√ 21 **5. ANY DISTURBED AREA LEFT EXPOSED FOR A PERIOD GREATER THAN 14 DAYS SHALL BE STABILIZED WITH MULCH OR TEMPORARY SEEDING.**

6. PERIMETER EROSION AND SEDIMENT CONTROL DEVICES AND ORANGE BARRIER FENCE SHALL BE INSTALLED PRIOR TO COMMENCEMENT OF SITE WORK AND REMAIN UNTIL COMPLETION OF WORK. CONTRACTOR IS RESPONSIBLE TO REPAIR OR REPLACE DAMAGED ITEMS. EROSION AND SEDIMENT CONTROL MEASURES SHALL BE INSPECTED AT LEAST WEEKLY, AFTER EACH RAIN, AND REPAIRED AS NECESSARY. ACCUMULATED SILT SHALL BE REMOVED AS SOON AS PRACTICAL, BUT NO LATER THAN WHEN FENCE IS HALF FULL.

7. ADDITIONAL EROSION AND SEDIMENT CONTROL MEASURES SHALL BE INSTALLED IF DETERMINED NECESSARY BY ON-SITE INSPECTION.

8. SILT FENCE SHALL MEET THE REQUIREMENTS OF SECTION 171 - TYPE C TEMPORARY SILT FENCE, OF THE GEORGIA DEPARTMENT OF TRANSPORTATION STANDARD SPECIFICATIONS, 1993 EDITION, AND BE WIRE REINFORCED.

9. THE PROPERTY OWNER AND CONTRACTOR ARE EQUALLY RESPONSIBLE FOR ALL EROSION CONTROL ACTIVITIES.

10. IT IS THE RESPONSIBILITY OF THE CONTRACTOR TO OBTAIN QUALIFIED PROFESSIONAL ADVICE WHEN QUESTIONS ARISE CONCERNING DESIGN AND EFFECTIVENESS OF EROSION CONTROL DEVICES, NOT THE CITY OF ATLANTA.

11. ALL TEMPORARY AND PERMANENT SEEDING MUST BE PERFORMED AT THE APPROPRIATE SEASON. IN SUCH INSTANCES WHERE THE ESTABLISHMENT OF VEGETATION IS INOPPORTUNE DUE TO SEASON OR DROUGHT, DISTURBED AREAS SHALL BE TEMPORARILY STABILIZED USING 2"-4" OF MULCH (DS1). ADDITIONAL PLANTINGS WILL BE NECESSARY IF A SUFFICIENT STAND OF GRASS FAILS TO GROW.

12. THE CITY'S DESIGNEE WILL VERIFY ADEQUATE COVER (100% COVER, 70% DENSITY) OF PERMANENT STABILIZATION (DS3, DS4).

13. SILT FENCES SHALL NOT BE PLACED IN STREAM BUFFER OR FLOODPLAINS, UNLESS UTILIZED FOR THE CONSTRUCTION OF AN EXEMPT ACTIVITY (I.E. ROADWAY DRAINAGE STRUCTURES, SEWER/WATER CROSSINGS, OR DRAINAGE STRUCTURES) PER THE APPROVED PLANS. FOR SUCH DISTURBANCES WITHIN THE BUFFER, THE AREA SHALL BE IMMEDIATELY STABILIZED USING EROSION CONTROL MATTING AND/OR BLANKETS ONCE THE ACTIVITY IS COMPLETE.

14. SUBCONTRACTORS INVOLVED WITH LAND DISTURBANCE ACTIVITIES SHALL MEET THE EDUCATION REQUIREMENTS (LEVEL 1) DESCRIBED IN O.C.G.A 12-7-19.

15. EROSION CONTROL AND TREE PROTECTION MEASURES SHALL BE INSTALLED PRIOR TO ANY OTHER CONSTRUCTION ACTIVITY AND SHALL BE MAINTAINED UNTIL PERMANENT GROUND COVER IS ESTABLISHED.

16. SOIL DISTURBING ACTIVITIES WILL INCLUDE: PLACEMENT OF EROSION AND SEDIMENT CONTROL, DEMOLITION, SITE CLEARING AND GRUBBING, GRADING OPERATIONS, FACILITIES CONSTRUCTION, TRENCH EXCAVATION AND BACKFILL, AND SURFACE RESTORATION.

17. CONTRACTOR IS RESPONSIBLE FOR MAINTAINING ALL EROSION CONTROL MEASURES INSTALLED IN GOOD WORKING ORDER FOR THE FULL DURATION OF THIS CONTRACT.

18. EROSION, SEDIMENT AND POLLUTION CONTROL MEASURES SHALL BE PROVIDED AS SHOWN AND ARE THE MINIMUM REQUIRED. ADDITIONAL EROSION AND SEDIMENT CONTROL MEASURES SHALL BE INSTALLED IF DETERMINED NECESSARY BY ON-SITE INSPECTION. ADDITIONAL DEVICES MAY BE REQUIRED AS NECESSARY DURING CONSTRUCTION.

19. CONTRACTOR SHALL INSTALL AND ADD TO EROSION CONTROL MEASURES AS DETERMINED BY THE ENGINEER, OWNER OR THE CITY.

20. PROVISIONS TO PREVENT EROSION OF SOIL FROM THE SITE SHALL BE, AT A MINIMUM, IN CONFORMANCE WITH THE REQUIREMENTS OF THE MANUAL FOR EROSION AND SEDIMENT CONTROL IN GEORGIA, CURRENT EDITION. THIS DESIGN SHALL CONFORM TO AND ALL WORK WILL BE PERFORMED IN ACCORDANCE WITH THE STANDARDS AND SPECIFICATIONS OF THIS PUBLICATION.

21. CONSTRUCTION EXITS (Co) SHALL BE REQUIRED AT ALL LOCATIONS USED FOR INGRESS/EGRESS FROM THE CONSTRUCTION AREA. CONSTRUCTION MATERIAL STORAGE AREAS WILL REQUIRE THE INSTALLATION OF A CONSTRUCTION EXIT TO REDUCE OR ELIMINATE THE TRANSPORT OF MUD FROM THE AREA. SILT FENCE SHALL ALSO BE INSTALLED TO PREVENT SEDIMENT FROM LEAVING THE MATERIAL STORAGE AREA. AFTER DEMOBILIZATION, THE MATERIAL STORAGE AREA SHALL BE SEEDED AND MULCHED, AND THE SILT FENCE SHALL REMAIN UNTIL THE AREA IS PERMANENTLY STABILIZED.

22. CONSTRUCTION DEBRIS (INCLUDING CONCRETE WASHOUT) SHALL BE PROPERLY DISPOSED OF OFFSITE IN LICENSED LANDFILLS OR LOCATIONS THAT ARE APPROVED BY FEDERAL, STATE, AND LOCAL AUTHORITIES. WASTE MATERIALS SHALL NOT BE DISCHARGED TO WATERS OF THE STATE, EXCEPT AS AUTHORIZED BY A SECTION 404 PERMIT.

23. NO BURN OR BURY PITS SHALL BE PERMITTED ON THE SITE WITHOUT THE EXPRESS WRITTEN AUTHORIZATION OF THE SITE OWNER AND/OR THE ENGINEER OF RECORD.

24. A TEMPORARY COVER OF HEAVY MULCH OR MULCH WITH TEMPORARY SEEDING SHALL BE PLACED ON ALL AREAS WHERE PERMANENT COVER CAN NOT BE ESTABLISHED IMMEDIATELY DUE TO SEASONAL LIMITATIONS.

25. IT IS THE RESPONSIBILITY OF THE CONTRACTOR TO ENSURE THAT UNDER NO CIRCUMSTANCES ANY SEDIMENT, TRASH, OR DEBRIS BE ALLOWED ONTO ADJACENT PROPERTIES, PUBLIC LANDS, OR OUTSIDE OF THE CONSTRUCTION LIMITS.

26. ALL EROSION CONTROL DEVICES, THAT ARE NOT DIRECTLY SPECIFIED AS TO INSTALLATION AND MATERIALS, SHALL MEET THE REQUIREMENTS OF THE GA. DEPT. OF TRANSPORTATION, SPECIFICATIONS FOR THE CONSTRUCTION OF ROADS AND BRIDGES, CURRENT EDITION, AND LATEST SUPPLEMENT IN EFFECT AT THE TIME OF BID OPENING OR THE MANUAL FOR EROSION AND SEDIMENT CONTROL IN GEORGIA, CURRENT EDITION.

27. ACCEPTANCE AND/OR SUBSEQUENT ACCEPTANCE OF THESE PLANS DOES NOT CONSTITUTE APPROVAL BY COA OF ANY LAND DISTURBING ACTIVITIES WITHIN WETLAND AREAS, JURISDICTIONAL WATERS OF THE STATE, AREAS OF THREATENED/ENDANGERED SPECIES, OR AREAS OF HISTORICAL SIGNIFICANCE. IT IS THE OWNER'S RESPONSIBILITY TO CONTACT THE APPROPRIATE REGULATORY AGENCY FOR ANY REQUIRED APPROVALS.

28. A COPY OF THE APPROVED LAND DISTURBANCE PLAN AND PERMIT SHALL BE PRESENT ON THE SITE AT ALL TIMES.

SOIL INFORMATION NOTES

1. SOILS INFORMATION IS FROM THE USDA NATURAL RESOURCES CONSERVATION SERVICE'S WEB SOIL SURVEY. SPATIAL EXTENTS OF SOIL LAYERS ARE SHOWN ON SHEETS C-308 AND C-309.
2. SOIL SERIES ARE GROUPINGS OF SIMILAR SOILS THAT WITH THE ALLOWABLE EXCEPTIONS FOR TEXTURE OF SURFACE LAYER OR THE UNDERLYING SUBSTRATUM, HAVE MAJOR HORIZONS THAT ARE SIMILAR IN COMPOSITION, THICKNESS, AND ARRANGEMENT IN THE PROFILE. THE SOIL PROFILE MAPPED IN THE SURVEY ONLY DESCRIBES THE HORIZONS UP TO A DEPTH OF 80-INCHES.

MAP UNIT SYMBOL	*MAP UNIT NAME*	*SLOPE (%)*
AaC	Altavista sandy loam	6-10
AgC	Appling-Hard Labor complex	6-10
BaA	Buncombe loamy sand	0-3
CaA	Cartecay-Toccoa complex	0-2
CpA	Congaree sandy loam	0-2
ReD	Rion sandy loam	10-15
ReE	Rion sandy loam	15-25
Ub	Urban land	N/A
UeE	Urban land-Ashlar-Rion complex	10-25
UfC2	Urban land-Cecil complex	2-10
UgE	Urban land-Grover-Mountain Park complex	10-25
UmC2	Urban land-Madison-Bethlehem complex	2-10
UrE	Urban land-Rion complex	10-25
W	Water	N/A

√ 28 ANTICIPATED CONSTRUCTION SCHEDULE

START: TO BE DETERMINED
COMPLETION: TO BE DETERMINED

ACTIVITY	MONTH 1	2	3	4	5
INITIAL PHASE BMP'S					
CLEARING & GRUBBING					
TEMPORARY VEGETATION					
INFRASTRUCTURE REHABILITATION					
REMOVE TEMP. EROSION CONTROL					
MAINTENANCE OF BMPS					

National Flood Hazard Layer FIRMette

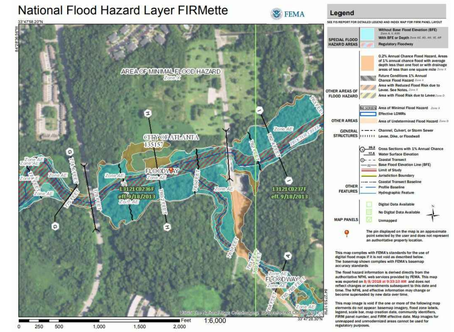

National Flood Hazard Layer FIRMette

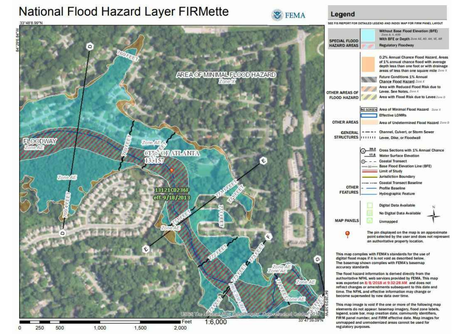

National Flood Hazard Layer FIRMette

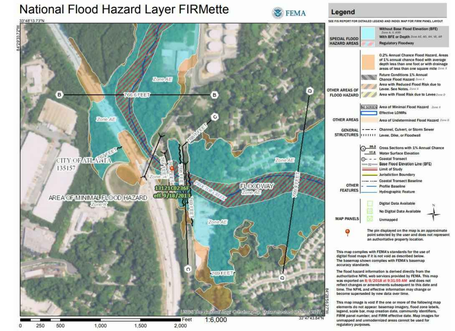

National Flood Hazard Layer FIRMette

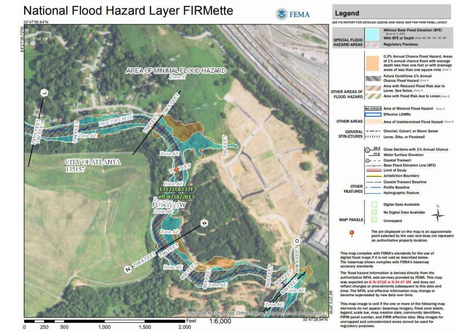

National Flood Hazard Layer FIRMette

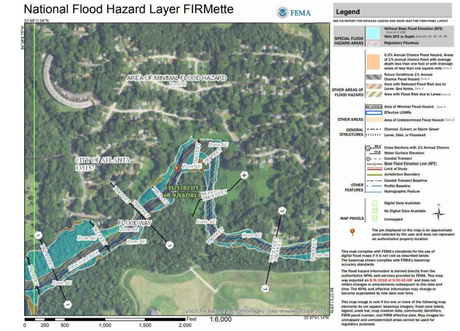

FEMA FIRMETTE FLOOD INSURANCE MAPS

NOTE: SCALE DEPICTED AS SHOWN DOES NOT REFLECT PRINTED SCALE.

GSWCC
Georgia Soil and Water Conservation Commission
Christopher Hamblen
Level II Certified Design Professional
Certification Number: 0000069253 Expires: 08-21-2019
Issued: 08-21-2015

CH2M | ROH&DFOX A JOINT VENTURE

811 Know what's below. Call before you dig.

GEORGIA REGISTERED No. 038034 PROFESSIONAL ENGINEER CHRISTOPHER S. HAMBLEN

ENGINEER OF RECORD

REVISIONS		
NO.	DATE	DESCRIPTION

CITY OF ATLANTA
DEPARTMENT OF WATERSHED MANAGEMENT
OFFICE OF ENGINEERING SERVICES

LOWER PROCTOR SEWER REPAIRS
EROSION AND SEDIMENT CONTROL NOTES

SURVEYOR	FIELD BOOKS	L.L. DIST.	COUNTY	SCALE
			FULTON	NTS
DRAWN BY D CORBETT	DESIGNED BY A KINSEY	CHECKED BY C HAMBLEN	APPROVED BY T KELLEY	DATE NOV 2018

PROJECT NUMBER: 674854 SHEET: C-305

GEORGIA
UNIFORM CODING SYSTEM
FOR SOIL EROSION AND SEDIMENT CONTROL PRACTICES
GEORGIA SOIL AND WATER CONSERVATION COMMISSION

STRUCTURAL PRACTICES

CODE	PRACTICE	DETAIL	MAP SYMBOL	DESCRIPTION
Cd	CHECKDAM			A small temporary barrier or dam constructed across a swale, drainage ditch or area of concentrated flow.
Ch	CHANNEL STABILIZATION			Improving, constructing or stabilizing an open channel, existing stream, or ditch.
Co	CONSTRUCTION EXIT			A crushed stone pad located at the construction site exit to provide a place for removing mud from tires thereby protecting public streets.
Cr	CONSTRUCTION ROAD STABILIZATION			A travelway constructed as part of a construction plan including access roads, subdivision roads, parking areas and other on-site vehicle transportation routes.
Dc	STREAM DIVERSION CHANNEL			A temporary channel constructed to convey flow around a construction site while a permanent structure is being constructed.
Di	DIVERSION			An earth channel or dike located above, below, or across a slope to divert runoff. This may be a temporary or permanent structure.
Dn1	TEMPORARY DOWNDRAIN STRUCTURE			A flexible conduit of heavy-duty fabric or other material designed to safely conduct surface runoff down a slope. This is temporary and inexpensive.
Dn2	PERMANENT DOWNDRAIN STRUCTURE			A paved chute, pipe, sectional conduit or similar material designed to safely conduct surface runoff down a slope.
Fr	FILTER RING			A temporary stone barrier constructed at storm drain inlets and pond outlets.
Ga	GABION			Rock filter baskets which are hand-placed into position forming soil stabilizing structures.
Gr	GRADE STABILIZATION STRUCTURE			Permanent structures installed to protect channels or waterways where otherwise the slope would be sufficient for the running water to form gullies.
Lv	LEVEL SPREADER			A structure to convert concentrated flow of water into less erosive sheet flow. This should be constructed only on undisturbed soils.
Rd	ROCK FILTER DAM			A permanent or temporary stone filter dam installed across small streams or drainageways.
Re	RETAINING WALL			A wall installed to stabilize cut and fill slopes where maximum permissible slopes are not obtainable. Each situation will require special design.
Rt	RETRO FITTING			A device or structure placed in front of a permanent stormwater detention pond outlet structure to serve as a temporary sediment filter.
Sd1	SEDIMENT BARRIER		(INDICATE TYPE)	A barrier to prevent sediment from leaving the construction site. It may be sandbags, bales of straw or hay, brush, logs and poles, gravel, or a silt fence.
Sd2	INLET SEDIMENT TRAP			An impounding area created by excavating around a storm drain drop inlet. The excavated area will be filled and stabilized on completion of construction activities.
Sd3	TEMPORARY SEDIMENT BASIN			A basin created by excavation or a dam across a waterway. The surface water runoff is temporarily stored allowing the bulk of the sediment to drop out.
Sd4	TEMPORARY SEDIMENT TRAP			A small temporary pond that drains a disturbed area so that sediment can settle out. The principle feature distinguishing a temporary sediment trap from a temporary sediment basin is the lack of a pipe or riser.
Sk	FLOATING SURFACE SKIMMER			A buoyant device that releases/drains water from the surface of sediment ponds, traps, or basins at a controlled rate of flow.
Spb	SEEP BERM			Linear control device constructed as a diversion perpendicular to the direction of runoff to enhance dissipation and infiltration, while creating multiple sedimentation chambers with the employment of intermediate dikes.

STRUCTURAL PRACTICES

CODE	PRACTICE	DETAIL	MAP SYMBOL	DESCRIPTION
Sr	TEMPORARY STREAM CROSSING			A temporary bridge or culvert-type structure protecting a stream or watercourse from damage by crossing construction equipment.
St	STORMDRAIN OUTLET PROTECTION			A paved or short section of riprap channel at the outlet of a storm drain system preventing erosion from the concentrated runoff.
Su	SURFACE ROUGHENING			A rough soil surface with horizontal depressions on a contour or slopes left in a roughened condition after grading.
Tc	TURBIDITY CURTAIN			A floating or staked barrier installed within the water (it may also be referred to as a floating boom, silt barrier, or silt curtain).
Tp	TOPSOILING		(SHOW STRIPPING AND STORAGE AREAS)	The practice of stripping off the more fertile soil, storing it, then spreading it over the disturbed area after completion of construction activities.
Tr	TREE PROTECTION		(DENOTE TREE CENTERS)	To protect desirable trees from injury during construction activity.
Wt	VEGETATED WATERWAY OR STORMWATER CONVEYANCE CHANNEL			Paved or vegetative water outlets for diversions, terraces, berms, dikes or similar structures.

VEGETATIVE PRACTICES

CODE	PRACTICE	DETAIL	MAP SYMBOL	DESCRIPTION
Bf	BUFFER ZONE		Bf	Strip of undisturbed original vegetation, enhanced or restored existing vegetation or the reestablishment of vegetation surrounding an area of disturbance or bordering streams.
Cs	COASTAL DUNE STABILIZATION (WITH VEGETATION)		Cs	Planting vegetation on dunes that are denuded, artificially constructed, or re-nourished.
Ds1	DISTURBED AREA STABILIZATION (WITH MULCHING ONLY)		Ds1	Establishing temporary protection for disturbed areas where seedlings may not have a suitable growing season to produce an erosion retarding cover.
Ds2	DISTURBED AREA STABILIZATION (WITH TEMP SEEDING)		Ds2	Establishing a temporary vegetative cover with fast growing seedings on disturbed areas.
Ds3	DISTURBED AREA STABILIZATION (WITH PERM SEEDING)		Ds3	Establishing a permanent vegetative cover such as trees, shrubs, vines, grasses, or legumes on disturbed areas.
Ds4	DISTURBED AREA STABILIZATION (SODDING)		Ds4	A permanent vegetative cover using sods on highly erodable or critically eroded lands.
Du	DUST CONTROL ON DISTURBED AREAS		Du	Controlling surface and air movement of dust on construction site, roadways and similar sites.
Fl-Co	FLOCCULANTS AND COAGULANTS		Fl-Co	Substance formulated to assist in the solids/liquid separation of suspended particles in solution.
Sb	STREAMBANK STABILIZATION (USING PERM VEGETATION)		Sb	The use of readily available native plant materials to maintain and enhance streambanks, or to prevent, or restore and repair small streambank erosion problems.
Ss	SLOPE STABILIZATION		Ss	A protective covering used to prevent erosion and establish temporary or permanent vegetation on steep slopes, shore lines, or channels.
Tac	TACKIFIERS AND BINDERS		Tac	Substance used to anchor straw or hay mulch by causing the organic material to bind together.

GaSWCC (Amended – 2013)

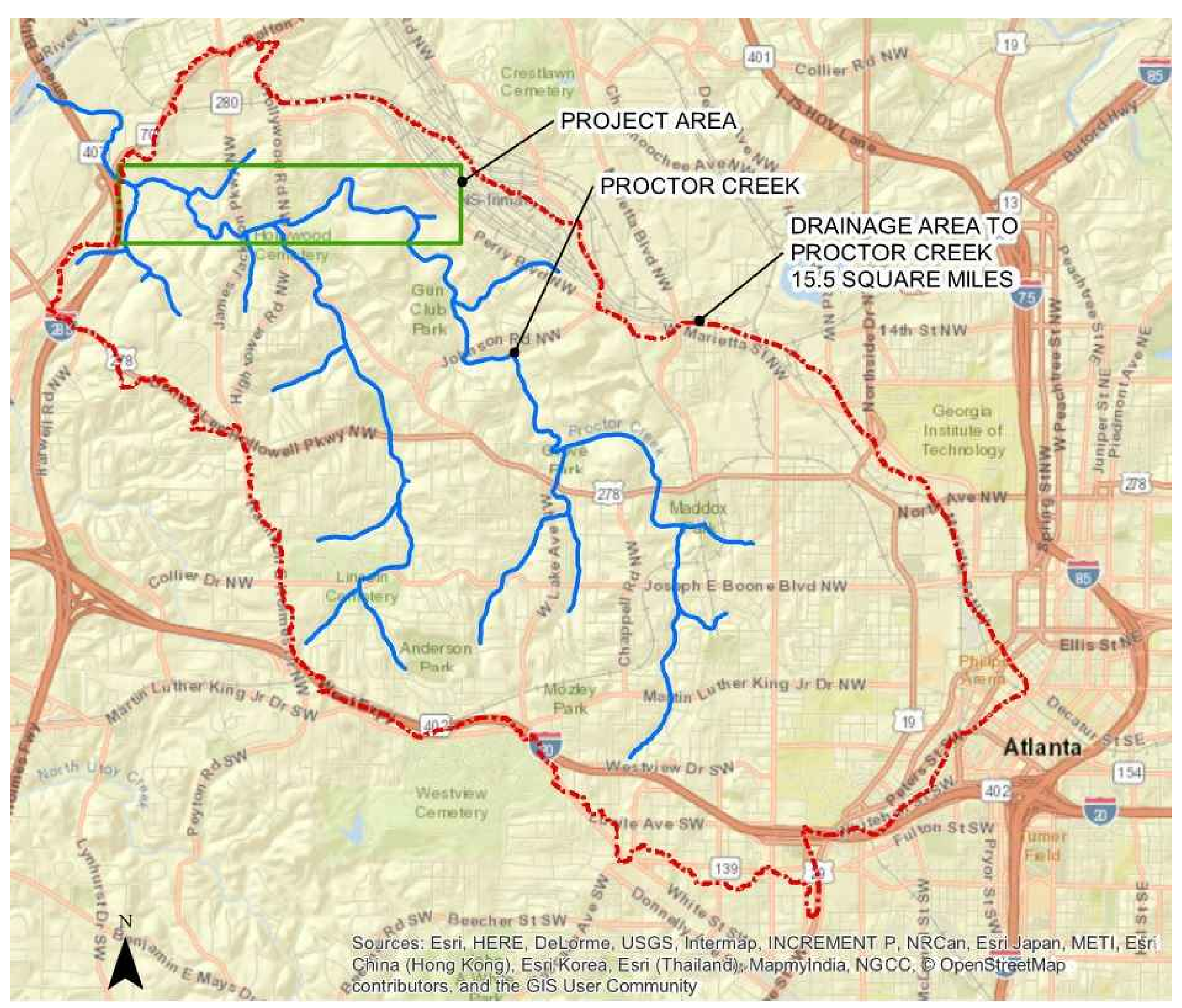

√ 9 OFFSITE DRAINAGE AREA (USGS TOPO MAP)

√ 42 NOTE: DRAINAGE AREA DELINEATED USING USGS STREAMSTATS.

√ 43

(Co) CRUSHED STONE CONSTRUCTION EXIT

EXIT DIAGRAM

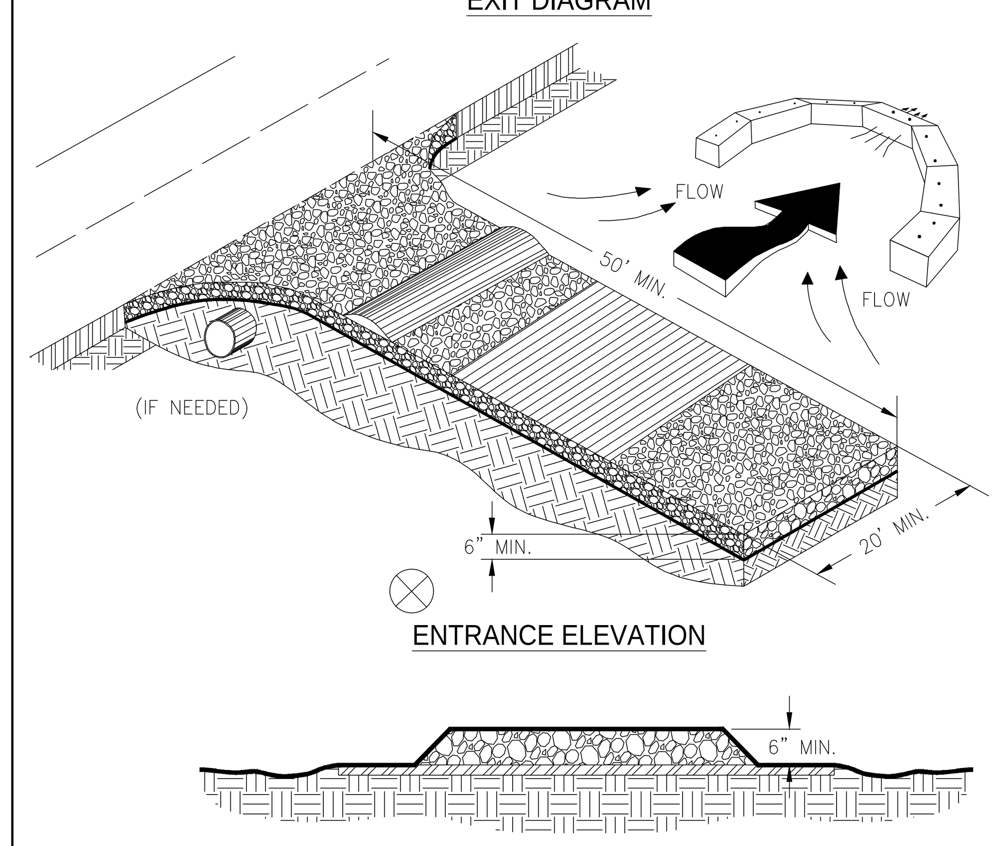

NOTES:
1. AVOID LOCATING ON STEEP SLOPES OR AT CURVES ON PUBLIC ROADS.
2. REMOVE ALL VEGETATION AND OTHER UNSUITABLE MATERIAL FROM THE FOUNDATION AREA, GRADE, AND CROWN FOR POSITIVE DRAINAGE.
3. AGGREGATE SIZE SHALL BE IN ACCORDANCE WITH NATIONAL STONE ASSOCIATION R-2 (1.5"-3.5" STONE).
4. GRAVEL PAD SHALL HAVE A MINIMUM THICKNESS OF 6".
5. PAD WIDTH SHALL BE EQUAL FULL WIDTH AT ALL POINTS OF VEHICULAR EGRESS, BUT NO LESS THAN 20'.
6. A DIVERSION RIDGE SHOULD BE CONSTRUCTED WHEN GRADE TOWARD PAVED AREA IS GREATER THAN 2%..
7. INSTALL PIPE UNDER THE ENTRANCE IF NEEDED TO MAINTAIN DRAINAGE DITCHES.
8. WHEN WASHING IS REQUIRED, IT SHOULD BE DONE ON AN AREA STABILIZED WITH CRUSHED STONE THAT DRAINS INTO AN APPROVED SEDIMENT TRAP OR SEDIMENT BASIN (DIVERT ALL SURFACE RUNOFF AND DRAINAGE FROM THE ENTRANCE TO A SEDIMENT CONTROL DEVICE).
9. WASHRACKS AND/OR TIRE WASHERS MAY BE REQUIRED DEPENDING ON SCALE AND CIRCUMSTANCE. IF NECESSARY, WASHRACK DESIGN MAY CONSIST OF ANY MATERIAL SUITABLE FOR TRUCK TRAFFIC THAT REMOVE MUD AND DIRT.
10. MAINTAIN AREA IN A WAY THAT PREVENTS TRACKING AND/OR FLOW OF MUD ONTO PUBLIC RIGHTS-OF-WAYS. THIS MAY REQUIRE TOP DRESSING, REPAIR AND/OR CLEANOUT OF ANY MEASURES USED TO TRAP SEDIMENT.

(Sd1-S) SILT FENCE - TYPE SENSITIVE

SIDE VIEW

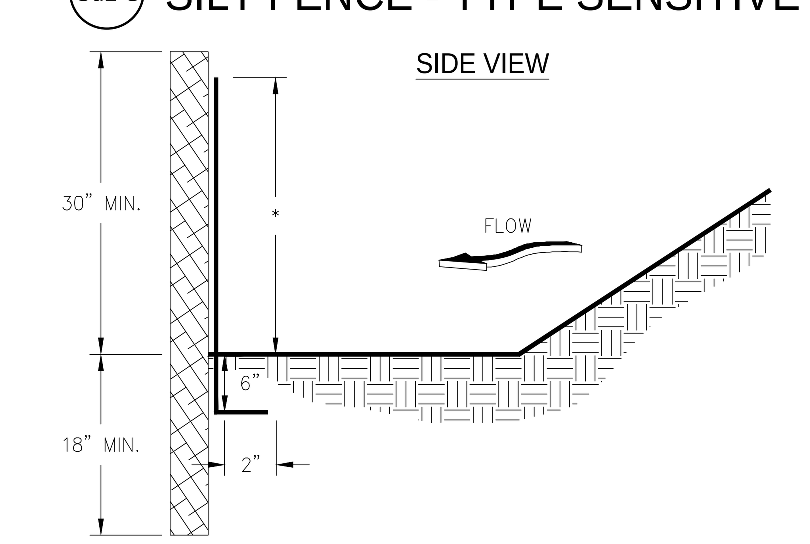

FRONT VIEW

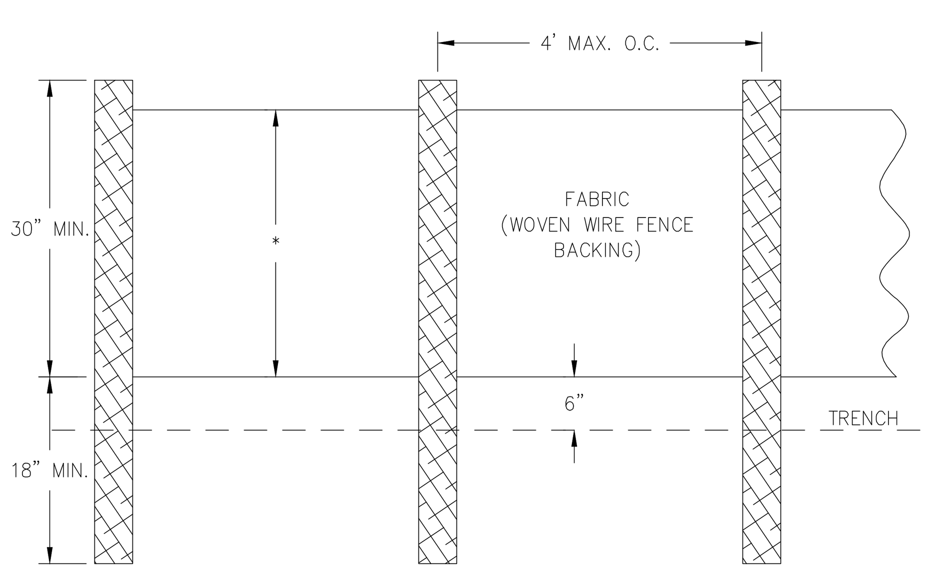

NOTES:
1. USE STEEL OR WOOD POSTS OR AS SPECIFIED BY THE EROSION, SEDIMENTATION, AND POLLUTION CONTROL PLAN.
2. HEIGHT (*) IS TO BE SHOWN ON THE EROSION, SEDIMENTATION, AND POLLUTION CONTROL PLAN.

√ 1

EROSION, SEDIMENTATION & POLLUTION CONTROL PLAN CHECKLIST
INFRASTRUCTURE CONSTRUCTION PROJECTS
SWCD: Fulton County - Region 1

Project Name: Lower Proctor Creek Trunk Sewer Rehab. **Address:** 72 Marietta Street NW, Atlanta GA 30303
City/County: Atlanta, GA **Date on Plans:** October 2018
Name &email of person filling out checklist: A. Kinsey, Jacobs

Plan Page #	Included Y/N	TO BE SHOWN ON ES&PC PLAN
C-306	Y	1 The applicable Erosion, Sedimentation and Pollution Control Plan Checklist established by the Commission as of January 1 of the year in which the land-disturbing activity was permitted. (The completed Checklist must be submitted with the ES&PC Plan or the Plan will not be reviewed)
C-305 - C-311	Y	2 Level II certification number issued by the Commission, signature and seal of the certified design professional. (Signature, seal and Level II number must be on each sheet pertaining to ES&PC Plan or the Plan will not be reviewed)
C-305	Y	3 The name and phone number of the 24-hour local contact responsible for erosion, sedimentation and pollution controls.
C-305	Y	4 Provide the name, address and phone number of primary permittee.
C-305	Y	5 Note total and disturbed acreage of the project or phase under construction.
C-305	Y	6 Provide the GPS locations of the beginning and end of the Infrastructure project. Give the Latitude and Longitude in decimal degrees.
C SERIES	Y	7 Initial date of the Plan and the dates of any revisions made to the Plan including the entity who requested the revisions.
C-305	Y	8 Description of the nature of construction activity.
C-306	Y	9 Provide vicinity map showing site's relation to surrounding areas. Include designation of specific phase, if necessary.
C-305	Y	10 Identify the project receiving waters and describe all sensitive adjacent areas including streams, lakes, residential areas, wetlands, marshlands, etc. which may be affected.
C-305	Y	11 Design professional's certification statement and signature that the site was visited prior to development of the ES&PC Plan as stated on page 15 of the permit.
NONE	N/A	12 Design professional's certification statement and signature that the permittee's ES&PC Plan provides for an appropriate and comprehensive system of BMPs and sampling to meet permit requirements as stated on page 15 of the permit.*
NONE	N/A	13 Design professional certification statement and signature that the permittee's ES&PC Plan provides for representative sampling as stated on page 26 of permit as applicable.*
NONE	N/A	14 Clearly note the statement that "The design professional who prepared the ES&PC Plan is to inspect the installation of the initial sediment storage requirements, perimeter control BMPs, and sediment basins in accordance with part IV.A.5. within 7 days after installation."*
C-305	Y	15 Clearly note the statement that "Non-exempt activities shall not be conducted within the 25 or 50-foot undisturbed stream buffers as measured from the point of wrested vegetation or within 25-feet of the coastal marshland buffer as measured from the Jurisdictional Determination Line without first acquiring the necessary variances and permits."
C-305	Y	16 Provide a description of any buffer encroachments and indicate whether a buffer variance is required.
NONE	N/A	17 Clearly note the statement that "Amendments/revisions to the ES&PC Plan which have a significant effect on BMPs with a hydraulic component must be certified by the design professional."*
NONE	N/A	18 Clearly note the statement that "Waste materials shall not be discharged to waters of the State, except as authorized by a section 404 permit."*
C-305	Y	19 Clearly note statement that "The escape of sediment from the site shall be prevented by the installation of erosion and sediment control measures and practices prior to land disturbing activities."
C-305	Y	20 Clearly note statement that "Erosion control measures will be maintained at all times. If full implementation of the approved Plan does not provide for effective erosion control, additional erosion and sediment control measures shall be implemented to control or treat the sediment source."
C-305	Y	21 Clearly note the statement "Any disturbed area left exposed for a period greater than 14 days shall be stabilized with mulch or temporary seeding."
NONE	N/A	22 Any construction activity which discharges storm water into an Impaired Stream Segment, or within 1 linear mile upstream of and within the same watershed as, any portion of an Biota Impaired Stream Segment must comply with Part III. C. of the Permit. Include the completed Appendix 1 listing all the BMPs that will be used for those areas of the site which discharge to the Impaired Stream Segment.*
NONE	N/A	23 If a TMDL Implementation Plan for sediment has been finalized for the Impaired Stream Segment (identified in item 22 above) at least six months prior to submittal of NOI, the ES&PC Plan must address any site-specific conditions or requirements included in the TMDL Implementation Plan.*
NONE	N/A	24 BMPs for concrete washdown of tools, concrete mixer chutes, hoppers and the rear of the vehicles. Washout of the drum at the construction site is prohibited.*
C-305	Y	25 Provide BMPs for the remediation of all petroleum spills and leaks.
NONE	N/A	26 Description of the measures that will be installed during the construction process to control pollutants in storm water that will occur after construction operations have been completed.*
NONE	N/A	27 Description of the practices that will be used to reduce the pollutants in storm water discharges.*
C-305	Y	28 Description and chart or timeline of the intended sequence of major activities which disturb soils for the major portions of the site (i.e., initial perimeter and sediment storage BMPs, clearing and grubbing activities, excavation activities, utility activities, temporary and final stabilization).
NONE	N/A	29 Provide complete requirements of inspections and record keeping by the primary permittee.*
NONE	N/A	30 Provide complete requirements of sampling frequency and reporting of sampling results.*
NONE	N/A	31 Provide complete details for retention of records as per Part IV.F. of the permit.*
NONE	N/A	32 Description of analytical methods to be used to collect and analyze the samples from each location.*
NONE	N/A	33 Appendix B rationale for NTU values at all outfall sampling points where applicable.*
NONE	N/A	34 Delineate all sampling locations, perennial and intermittent streams and other water bodies into which storm water is discharged also provide a summary chart of the justification and analysis for the representative sampling as applicable.*
NONE	N/A	35 A description of appropriate controls and measures that will be implemented at the construction site including: (1) initial sediment storage requirements and perimeter control BMPs, (2) intermediate grading and drainage BMPs, and (3) final BMPs. For construction sites where there will be no mass grading and the initial perimeter control BMPs, intermediate grading and drainage BMPs, and final BMPs are the same, the plan may combine all of the BMPs into a single phase.*
C-308 - C-311	Y	36 Graphic scale and North arrow.
C-308 - C-311	Y	37 Existing and proposed contour lines with contour lines drawn at an interval in accordance with the following: Existing Contours – USGS 1": 2000' Topographical Sheets; Proposed Contours – 1" : 400' Centerline Profile
NONE	N/A	38 Use of alternative BMPs whose performance has been documented to be equivalent to or superior to conventional BMPs as certified by a Design Professional (unless disapproved by EPD or the Georgia Soil and Water Conservation Commission). Please refer to the Alternative BMP Guidance Document found at www.gaswcc.org.
NONE	N/A	39 Use of alternative BMP for application to the Equivalent BMP List. Please refer to Appendix A-2 of the Manual for Erosion & Sediment Control in Georgia 2016 Edition.*
C-308 - C-311	Y	40 Delineation of the applicable 25-foot or 50-foot undisturbed buffers adjacent to State waters and any additional buffers required by the Local Issuing Authority. Clearly note and delineate all areas of impact.
C-308 - C-311	Y	41 Delineation of on-site wetlands and all State waters located on and within 200 feet of the project site.
C-306	Y	42 Delineation and acreage of contributing drainage basins on the project site.
C-306	Y	43 Delineate on-site drainage and off-site watersheds using USGS 1" :2000' topographical sheets.
C-305	Y	44 An estimate of the runoff coefficient or peak discharge flow of the site prior to and after construction activities are completed.
N/A	N	45 Storm-drain pipe and weir velocities with appropriate outlet protection to accommodate discharges without erosion. Identify/Delineate all storm water discharge points.
C-305, 308-311	Y	46 Soil series for the project site and their delineation.
C-308 - C-311	Y	47 The limits of disturbance for each phase of construction.
C-308 - C-311	Y	48 Provide a minimum of 67 cubic yards of sediment storage per acre drained using a temporary sediment basin, retrofitted detention pond, and/or excavated inlet sediment traps for each common drainage location. Sediment storage volume must be in place prior to and during all land disturbance activities until final stabilization of the site has been achieved. A written justification explaining the decision to use equivalent controls when a sediment basin is not attainable must be included in the plan for each common drainage location in which a sediment basin is not provided. A written justification as to why 67 cubic yards of storage is not attainable must also be given. Worksheets from the Manual must be included for structural BMPs and all calculations used by the design professional to obtain the required sediment storage when using equivalent controls. When discharging from sediment basins and impoundments, permittees are required to utilize outlet structures that withdraw water from the surface, unless infeasible. If outlet structures that withdraw water from the surface are not feasable, a written justification explaining this decision must be included in the plan.
C-308 - C-311	Y	49 Location of Best Management Practices that are consistent with and no less stringent than the Manual for Erosion and Sediment Control in Georgia. Use uniform coding symbols from the Manual, Chapter 6, with legend.
C-306, C-307	Y	50 Provide detailed drawings for all structural practices. Specifications must, at a minimum, meet the guidelines set forth in the Manual for Erosion and Sediment Control in Georgia.
C-307	Y	51 Provide vegetative plan, noting all temporary and permanent vegetative practices. Include species, planting dates and seeding, fertilizer, lime and mulching rates. Vegetative plan shall be site specific for appropriate time of year that seeding will take place and for the appropriate geographic region of Georgia.

*If using this checklist for a project that is less than 1 acre and not part of a common development but within 200 ft of a perennial stream the * checklist items would be N/A.

Effective January 1, 2018

Du DUST CONTROL ON DISTURBED AREAS

DEFINITION

CONTROLLING SURFACE AND AIR MOVEMENT OF DUST ON CONSTRUCTION SITES, ROADS, AND DEMOLITION SITES.

CONDITIONS

THIS PRACTICE IS APPLICABLE TO AREAS SUBJECT TO SURFACE AND AIR MOVEMENT OF DUST WHERE ON AND OFF-SITE DAMAGE MAY OCCUR WITHOUT TREATMENT.

METHOD AND MATERIALS

A. TEMPORARY METHODS
- MULCHES. SEE STANDARD DS1 - DISTURBED AREA STABILIZATION (WITH MULCHING ONLY). SYNTHETIC RESINS MAY BE USED INSTEAD OF ASPHALT TO BIND MULCH MATERIAL. REFER TO STANDARD TB-TACKIFIERS AND BINDERS. RESINS SUCH AS CURASOL OR TERRATACK SHOULD BE USED ACCORDING TO MANUFACTURER'S RECOMMENDATIONS.
- VEGETATIVE COVER. SEE STANDARD DS2 - DISTURBED AREA STABILIZATION (WITH TEMPORARY SEEDING).
- SPRAY-ON ADHESIVES. THESE ARE USED ON MINERAL SOILS (NOT EFFECTIVE ON MUCK SOILS). KEEP TRAFFIC OFF THESE AREAS. REFER TO STANDARD TB-TACKIFIERS AND BINDERS.
- TILLAGE. THIS PRACTICE IS DESIGNED TO ROUGHEN AND BRING CLODS TO THE SURFACE. IT IS AN EMERGENCY MEASURE WHICH SHOULD BE USED BEFORE WIND EROSION STARTS. BEGIN PLOWING ON WINDWARD SIDE OF SITE. CHISEL-TYPE PLOWS SPACED ABOUT 12 INCHES APART, SPRING-TOOTHED HARROWS, AND SIMILAR PLOWS ARE EXAMPLES OF EQUIPMENT WHICH MAY PRODUCE THE DESIRED EFFECT.
- IRRIGATION. THIS IS GENERALLY DONE AS AN EMERGENCY TREATMENT. SITE IS SPRINKLED WITH WATER UNTIL THE SURFACE IS WET. REPEAT AS NEEDED.
- BARRIERS. SOLID BOARD FENCES, SNOW FENCES, BURLAP FENCES, CRATE WALLS, BALES OF HAY AND SIMILAR MATERIAL CAN BE USED TO CONTROL AIR CURRENTS AND SOIL BLOWING. BARRIERS PLACED AT RIGHT ANGLES TO PREVAILING CURRENTS AT INTERVALS OF ABOUT 15 TIMES THEIR HEIGHT ARE EFFECTIVE IN CONTROLLING WIND EROSION.
- CALCIUM CHLORIDE. APPLY AT RATE THAT WILL KEEP SURFACE MOIST. MAY NEED RETREATMENT.

B. PERMANENT METHODS
- PERMANENT VEGETATION: SEE STANDARD DS3 -DISTURBED AREA STABILIZATION (WITH PERMANENT VEGETATION). EXISTING TREES AND LARGE SHRUBS MAY AFFORD VALUABLE PROTECTION IF LEFT IN PLACE.
- TOPSOILING: THIS ENTAILS COVERING THE SURFACE WITH LESS EROSIVE SOIL MATERIAL. SEE STANDARD TP - TOPSOILING.
- STONE: COVER SURFACE WITH CRUSHED STONE OR COARSE GRAVEL. SEE STANDARD CR-CONSTRUCTION ROAD STABILIZATION.

GSWCC Georgia Soil and Water Conservation Commission
Christopher Hamblen
Level II Certified Design Professional
Certification Number: 0000069253 Expires: 08-21-2019
Issued: 08-21-2015

ch2m | ROHADFOX A JOINT VENTURE

811 Know what's below. Call before you dig.

GEORGIA REGISTERED No. 038034 PROFESSIONAL ENGINEER CHRISTOPHER S. HAMBLEN

ENGINEER OF RECORD

REVISIONS

NO.	DATE	DESCRIPTION

CITY OF ATLANTA
DEPARTMENT OF WATERSHED MANAGEMENT
OFFICE OF ENGINEERING SERVICES

LOWER PROCTOR SEWER REPAIRS
EROSION AND SEDIMENT CONTROL DETAILS

SURVEYOR	FIELD BOOKS	L.L. DIST.	COUNTY	SCALE
DRAWN BY D CORBETT	DESIGNED BY A KINSEY	CHECKED BY C HAMBLEN	APPROVED BY T KELLEY	DATE NOV 2018

PROJECT NUMBER: 674854 SHEET: C-306

Ds1 DISTURBED AREA STABILIZATION (WITH MULCHING ONLY)

DEFINITION

APPLYING PLANT RESIDUES OR OTHER SUITABLE MATERIALS, PRODUCED ON THE SITE IF POSSIBLE, TO THE SOIL SURFACE.

MULCHING RATE		
MATERIAL	RATE	DEPTH
STRAW	2.0 TON/ACRE	2" - 4"
HAY	2.5 TON/ACRE	2" - 4"
WOOD WASTE: CHIPS, SAWDUST, BARK	---	2" - 3"
POLYETHYLENE FILM	SECURE W/ SOIL AND ANCHORS	---

CONDITIONS

MULCH OR TEMPORARY GRASSING SHALL BE APPLIED TO ALL EXPOSED AREAS WITHIN 14 DAYS OF DISTURBANCE. MULCH CAN BE USED AS A SINGULAR EROSION CONTROL DEVICE FOR UP TO SIX MONTHS, BUT IT SHALL BE APPLIED AT THE APPROPRIATE DEPTH, DEPENDING ON THE MATERIAL USED, ANCHORED, AND HAVE A CONTINUOUS 90% COVER OR GREATER OF THE SOIL SURFACE. MAINTENANCE SHALL BE REQUIRED TO MAINTAIN APPROPRIATE DEPTH AND 90% COVER. TEMPORARY VEGETATION MAY BE EMPLOYED INSTEAD OF MULCH IF THE AREA WILL REMAIN UNDISTURBED FOR LESS THAN SIX MONTHS. IF AN AREA WILL REMAIN UNDISTURBED FOR GREATER THAN SIX MONTHS, PERMANENT VEGETATIVE TECHNIQUES SHALL BE EMPLOYED.

SPECIFICATIONS

MULCHING WITHOUT SEEDING
THIS STANDARD APPLIES TO GRADES OR CLEARED AREAS WHERE SEEDINGS MAY NOT HAVE A SUITABLE GROWING SEASON TO PRODUCE AN EROSION RETARDANT COVER, BUT CAN BE STABILIZED WITH A MULCH COVER.

SITE PREPARATION
1. GRADE TO PERMIT THE USE OF EQUIPMENT FOR APPLYING AND ANCHORING MULCH.
2. INSTALL NEEDED EROSION CONTROL MEASURES AS REQUIRED SUCH AS DIKES, DIVERSIONS, BERMS, TERRACES AND SEDIMENT BARRIERS.
3. LOOSEN COMPACT SOIL TO A MINIMUM DEPTH OF 3 INCHES.

MULCHING MATERIALS
SELECT ONE OF THE FOLLOWING MATERIALS AND APPLY AT THE DEPTH INDICATED:
1. DRY STRAW OR HAY SHALL BE APPLIED AT A DEPTH OF 2 TO 4 INCHES PROVIDING COMPLETE SOIL COVERAGE. ONE ADVANTAGE OF THIS MATERIAL IS EASY APPLICATION.
2. WOOD WASTE (CHIPS, SAWDUST OR BARK) SHALL BE APPLIED AT A DEPTH OF 2 TO 3 INCHES. ORGANIC MATERIAL FROM THE CLEARING STAGE OF DEVELOPMENT SHOULD REMAIN ON SITE, BE CHIPPED, AND APPLIED AS MULCH. THIS METHOD OF MULCHING CAN GREATLY REDUCE EROSION CONTROL COSTS.
3. CUTBACK ASPHALT (SLOW CURING) SHALL BE APPLIED AT 1200 GALLONS PER ACRE (OR 1/4 GALLON PER SQ.YD.).
4. POLYETHYLENE FILM SHALL BE SECURED OVER BANKS OR STOCKPILED SOIL MATERIAL FOR TEMPORARY PROTECTION. THIS MATERIAL CAN BE SALVAGED AND REUSED.

APPLYING MULCH
WHEN MULCH IS USED WITHOUT SEEDING, MULCH SHALL BE APPLIED TO PROVIDE FULL COVERAGE OF THE EXPOSED AREA.
1. DRY STRAW OR HAY MULCH AND WOOD CHIPS SHALL BE APPLIED UNIFORMLY BY HAND OR BY MECHANICALEQUIPMENT.
2. IF THE AREA WILL EVENTUALLY BE COVERED WITH PERENNIAL VEGETATION, 20-30 POUNDS OF NITROGEN PER ACRE IN ADDITION TO THE NORMAL AMOUNT SHALL BE APPLIED TO OFFSET THE UPTAKE OF NITROGEN CAUSED BY THE DECOMPOSITION OF THE ORGANIC MULCHES.
3. CUTBACK ASPHALT SHALL BE APPLIED UNIFORMLY. CARE SHOULD BE TAKEN IN AREAS OF PEDESTRIAN TRAFFIC DUE TO PROBLEMS OF 'TRACKING IN" OR DAMAGE TO SHOES, CLOTHING, ETC.
4. APPLY POLYETHYLENE FILM ON EXPOSED AREAS.

ANCHORING MULCH
1. STRAW OR HAY MULCH CAN BE PRESSED INTO THE SOIL WITH A DISK HARROW WITH THE DISK SET STRAIGHT OR WITH A SPECIAL "PACKER DISK." DISKS MAY BE SMOOTH OR SERRATED AND SHOULD BE 20 INCHES OR MORE IN DIAMETER AND 8 TO 12 INCHES APART. THE EDGES OF THE DISK SHOULD BE DULL ENOUGH NOT TO CUT THE MULCH BUT TO PRESS IT INTO THE SOIL LEAVING MUCH OF IT IN AN ERECT POSITION. STRAW OR HAY MULCH SHALL BE ANCHORED IMMEDIATELY AFTER APPLICATION. STRAW OR HAY MULCH SPREAD WITH SPECIAL BLOWER-TYPE EQUIPMENT MAY BE ANCHORED WITH EMULSIFIED ASPHALT (GRADE AE-5 OR SS-1). THE ASPHALT EMULSION SHALL BE SPRAYED ONTO THE MULCH AS IT IS EJECTED FROM THE MACHINE. USE 100 GALLONS OF EMULSIFIED ASPHALT AND 100 GALLONS OF WATER PER TON OF MULCH. TACKIFERS AND BINDERS CAN BE SUBSTITUTED FOR EMULSIFIED ASPHALT. PLEASE REFER TO SPECIFICATION TB -TACKIFERS AND BINDERS. PLASTIC MESH OR NETTING WITH MESH NO LARGER THAN ONE INCH BY ONE INCH SHALL BE INSTALLED ACCORDING TO MANUFACTURER'S SPECIFICATIONS.
2. NETTING OF THE APPROPRIATE SIZE SHALL BE USED TO ANCHOR WOOD WASTE. OPENINGS OF THE NETTING SHALL NOT BE LARGER THAN THE AVERAGE SIZE OF THE WOOD WASTE CHIPS.
3. POLYETHYLENE FILM SHALL BE ANCHOR TRENCHED AT THE TOP AS WELL AS INCREMENTALLY AS NECESSARY.

Ds2 DISTURBED AREA STABILIZATION (WITH TEMPORARY SEEDING)

DEFINITION

THE ESTABLISHMENT OF TEMPORARY VEGETATIVE COVER WITH FAST GROWING SEEDINGS FOR SEASONAL PROTECTION ON DISTURBED OR DENUDED AREAS.

CONDITIONS

TEMPORARY GRASSING, INSTEAD OF MULCH, CAN BE APPLIED TO ROUGH GRADED AREAS THAT WILL BE EXPOSED FOR LESS THAN SIX MONTHS. TEMPORARY VEGETATIVE MEASURES SHOULD BE COORDINATED WITH PERMANENT MEASURES TO ASSURE ECONOMICAL AND EFFECTIVE STABILIZATION. MOST TYPES OF TEMPORARY VEGETATION ARE IDEAL TO USE AS COMPANION CROPS UNTIL THE PERMANENT VEGETATION IS ESTABLISHED.

SPECIFICATIONS

GRADING AND SHAPING

EXCESSIVE WATER RUN-OFF SHALL BE REDUCED BY PROPERLY DESIGNED AND INSTALLED EROSION CONTROL PRACTICES SUCH AS CLOSED DRAINS, DITCHES, DIKES, DIVERSIONS, SEDIMENT BARRIERS AND OTHERS.

NO SHAPING OR GRADING IS REQUIRED IF SLOPES CAN BE STABILIZED BY HAND-SEEDED VEGETATION OR IF HYDRAULIC SEEDING EQUIPMENT IS TO BE USED.

SEEDBED PREPARATION

WHEN A HYDRAULIC SEEDER IS USED, SEEDBED PREPARATION IS NOT REQUIRED. WHEN USING CONVENTIONAL OR HANDSEEDING, SEEDBED PREPARATION IS NOT REQUIRED IF THE SOIL MATERIAL IS LOOSE AND NOT SEALED BY RAINFALL.

WHEN SOIL HAS BEEN SEALED BY RAINFALL OR CONSISTS OF SMOOTH CUT SLOPES, THE SOIL SHALL BE PITTED, TRENCHED OR OTHERWISE SCARIFIED TO PROVIDE A PLACE FOR SEED TO LODGE AND GERMINATE.

LIME AND FERTILIZER

AGRICULTURAL LIME IS REQUIRED UNLESS SOIL TESTS INDICATE OTHERWISE. APPLY AGRICULTURAL LIME AT A RATE OF ONE TON PER ACRE. GRADED AREAS REQUIRE LIME APPLICATION. SOILS CAN BE TESTED TO DETERMINE IF FERTILIZER IS NEEDED. ON REASONABLY FERTILE SOILS OR SOIL MATERIAL, FERTILIZER IS NOT REQUIRED. FOR SOILS WITH VERY LOW FERTILITY, 500 TO 700 POUNDS OF 10-10-10 FERTILIZER OR THE EQUIVALENT PER ACRE (12-16 LBS./1,000 SQ. FT.) SHALL BE APPLIED. FERTILIZER SHOULD BE APPLIED BEFORE LAND PREPARATION AND INCORPORATED WITH A DISK, RIPPER OR CHISEL.

SEEDING

SELECT A GRASS OR GRASS-LEGUME MIXTURE SUITABLE TO THE AREA AND SEASON OF THE YEAR. SEED SHALL BE APPLIED UNIFORMLY BY HAND, CYCLONE SEEDER, DRILL, CULTIPACKER SEEDER, OR HYDRAULIC SEEDER (SLURRY INCLUDING SEED AND FERTILIZER). DRILL OR CULTIPACKER SEEDERS SHOULD NORMALLY PLACE SEED ONE-QUARTER TO ONE-HALF INCH DEEP. APPROPRIATE DEPTH OF PLANTING IS TEN TIMES THE SEED DIAMETER. SOIL SHOULD BE "RAKED" LIGHTLY TO COVER SEED WITH SOIL IF SEEDED BY HAND.

MULCHING

TEMPORARY VEGETATION CAN, IN MOST CASES, BE ESTABLISHED WITHOUT THE USE OF MULCH. MULCH WITHOUT SEEDING SHOULD BE CONSIDERED FOR SHORT TERM PROTECTION. REFER TO DS1 - DISTURBED AREA STABILIZATION (WITH MULCHING ONLY).

IRRIGATION

DURING TIMES OF DROUGHT, WATER SHALL BE APPLIED AT A RATE NOT CAUSING RUNOFF AND EROSION. THE SOIL SHALL BE THOROUGHLY WETTED TO A DEPTH THAT WILL INSURE GERMINATION OF THE SEED. SUBSEQUENT APPLICATIONS SHOULD BE MADE WHEN NEEDED.

Georgia Soil & Water Conservation Commission
Manual for Erosion and Sediment Control in Georgia (amended 2014)
Table 6-4.1 - Plants, planting rates and planting dates for **TEMPORARY COVER** or **COMPANION CROPS**
Major Land Resource Area (MLRA): *Southern Piedmont* (P), per Figure 6-4.1

Species	Broadcast Rates per acre (lbs.)	Broadcast Rates per 1000 sq.ft. (lbs.)	J	F	M	A	M	J	J	A	S	O	N	D	Remarks
Lovegrass, weeping (Eragrosits curvula)															
alone	4	0.1			-	X	X	-							1,500,000 seed per pound. May last for several years.
in mixtures	2	0.05													Mix with Sericea lespedeza.
Millet, browntop (Panicum faxciculatum)															137,000 seed per pound. Quick dense cover. Will
alone	40	0.9				-	X	X	-						provide too much competition in mixtures if seeded at
in mixtures	10	0.2													high rates.
Millet, pearl (Pennesetum glaucum)															
alone	50	1.1				-	X	X	X	-					88,000 seed per pound. Quick dense cover. May reach 5 feet in height. Not recommended for mixtures.
Ryegrass, annual (Lolium temulentum)															
alone	40	0.9	-	-	-	-				-	X	X	X	X	227,000 seed per pound. Dense cover. Very competitive and is not used in mixtures.

* 'X' are optimum dates; '-' are permissible but marginal dates

Ds3 DISTURBED AREA STABILIZATION (WITH PERMANENT SEEDING)

DEFINITION

THE PLANTING OF PERENNIAL VEGETATION SUCH AS TREES, SHRUBS, VINES, GRASSES, OR LEGUMES ON EXPOSED AREAS FOR FINAL PERMANENT STABILIZATION. PERMANENT PERENNIAL VEGETATION SHALL BE USED TO ACHIEVE FINAL STABILIZATION..

CONDITIONS

PERMANENT PERENNIAL VEGETATION IS USED TO PROVIDE A PROTECTIVE COVER FOR EXPOSED AREAS INCLUDING CUTS, FILLS, DAMS, AND OTHER DENUDED AREAS.

SPECIFICATIONS

GRADING AND SHAPING
1. GRADING AND SHAPING MAY NOT BE REQUIRED WHERE HYDRAULIC SEEDING AND FERTILIZING EQUIPMENT IS TO BE USED. VERTICAL BANKS SHALL BE SLOPED TO ENABLE PLANT ESTABLISHMENT.
2. WHEN CONVENTIONAL SEEDING AND FERTILIZING ARE TO BE DONE, GRADE AND SHAPE WHERE FEASIBLE AND PRACTICAL, SO THAT EQUIPMENT CAN BE USED SAFELY AND EFFICIENTLY DURING SEEDBED PREPARATION, SEEDING, MULCHING AND MAINTENANCE OF THE VEGETATION.
3. CONCENTRATIONS OF WATER THAT WILL CAUSE EXCESSIVE SOIL EROSION SHALL BE DIVERTED TO A SAFE OUTLET. DIVERSIONS AND OTHER TREATMENT PRACTICES SHALL CONFORM WITH THE APPROPRIATE STANDARDS AND SPECIFICATIONS.

SEEDBED PREPARATION
- SEEDBED PREPARATION MAY NOT BE REQUIRED WHERE HYDRAULIC SEEDING AND FERTILIZING EQUIPMENT IS TO BE USED. WHEN CONVENTIONAL SEEDING IS TO BE USED, SEEDBED PREPARATION WILL BE DONE AS FOLLOWS:

BROADCAST PLANTINGS
1. TILLAGE AT A MINIMUM, SHALL ADEQUATELY LOOSEN THE SOIL TO A DEPTH OF 4 TO 6 INCHES; ALLEVIATE COMPACTION; INCORPORATE LIME AND FERTILIZER; SMOOTH AND FIRM THE SOIL; ALLOW FOR THE PROPER PLACEMENT OF SEED, SPRIGS, OR PLANTS; AND ALLOW FOR THE ANCHORING OF STRAW OR HAY MULCH IF A DISK IS TO BE USED.
2. TILLAGE MAY BE DONE WITH ANY SUITABLE EQUIPMENT.
3. TILLAGE SHOULD BE DONE ON THE CONTOUR WHERE FEASIBLE.
4. ON SLOPES TOO STEEP FOR THE SAFE OPERATION OF TILLAGE EQUIPMENT, THE SOIL SURFACE SHALL BE PITTED OR TRENCHED ACROSS THE SLOPE WITH APPROPRIATE HAND TOOLS TO PROVIDE TWO PLACES 6 TO 8 INCHES APART IN WHICH SEED MAY LODGE AND GERMINATE. HYDRAULIC SEEDING MAY ALSO BE USED.

INDIVIDUAL PLANTS
1. WHERE INDIVIDUAL PLANTS ARE TO BE SET, THE SOIL SHALL BE PREPARED BY EXCAVATING HOLES, OPENING FURROWS, OR DIBBLE PLANTING.
2. FOR NURSERY STOCK PLANTS, HOLES SHALL BE LARGE ENOUGH TO ACCOMMODATE ROOTS WITHOUT CROWDING.
3. WHERE PINE SEEDLINGS ARE TO BE PLANTED, SUBSOIL UNDER THE ROW 36 INCHES DEEP ON THE CONTOUR FOUR TO SIX MONTHS PRIOR TO PLANTING. SUBSOILING SHOULD BE DONE WHEN THE SOIL IS DRY, PREFERABLY IN AUGUST OR SEPTEMBER.

PLANTING
1. HYDRAULIC SEEDING
   MIX THE SEED (INNOCULATED IF NEEDED), FERTILIZER, AND WOOD CELLULOSE OR WOOD PULP FIBER MULCH WITH WATER AND APPLY IN A SLURRY UNIFORMLY OVER THE AREA TO BE TREATED. APPLY WITHIN ONE HOUR AFTER THE MIXTURE IS MADE.
2. CONVENTIONAL SEEDING
   SEEDING WILL BE DONE ON A FRESHLY PREPARED AND FIRMED SEEDBED. FOR BROADCAST PLANTING, USE A CULTIPACKER SEEDER, DRILL, ROTARY SEEDER, OTHER MECHANICAL SEEDER, OR HAND SEEDING TO DISTRIBUTE THE SEED UNIFORMLY OVER THE AREA TO BE TREATED. COVER THE SEED LIGHTLY WITH 1/8 TO 1/4 INCH OF SOIL FOR SMALL SEED AND 1/2 TO 1 INCH FOR LARGE SEED WHEN USING A CULTIPACKER OR OTHER SUITABLE EQUIPMENT.
3. NO-TILL SEEDING
   NO-TILL SEEDING IS PERMISSIBLE INTO ANNUAL COVER CROPS WHEN PLANTING IS DONE FOLLOWING MATURITY OF THE COVER CROP OR IF THE TEMPORARY COVER STAND IS SPARSE ENOUGH TO ALLOW ADEQUATE GROWTH OF THE PERMANENT (PERENNIAL) SPECIES. NO-TILL SEEDING SHALL BE DONE WITH APPROPRIATE NO-TILL SEEDING EQUIPMENT. THE SEED MUST BE UNIFORMLY DISTRIBUTED AND PLANTED AT THE PROPER DEPTH.
4. INDIVIDUAL PLANTS
   SHRUBS, VINES AND SPRIGS MAY BE PLANTED WITH APPROPRIATE PLANTERS OR HAND TOOLS. PINE TREES SHALL BE PLANTED MANUALLY IN THE SUBSOIL FURROW. EACH PLANT SHALL BE SET IN A MANNER THAT WILL AVOID CROWDING THE ROOTS. NURSERY STOCK PLANTS SHALL BE PLANTED AT THE SAME DEPTH OR SLIGHTLY DEEPER THAN THEY GREW AT THE NURSERY. THE TIPS OF VINES AND SPRIGS MUST BE AT OR SLIGHTLY ABOVE THE GROUND SURFACE. WHERE INDIVIDUAL HOLES ARE DUG, FERTILIZER SHALL BE PLACED IN THE BOTTOM OF THE HOLE, TWO INCHES OF SOIL SHALL BE ADDED AND THE PLANT SHALL BE SET IN THE HOLE.

MULCHING
1. MULCH IS REQUIRED FOR ALL PERMANENT VEGETATION APPLICATIONS. MULCH APPLIED TO SEEDED AREAS SHALL ACHIEVE 75% SOIL COVER. SELECT THE MULCHING MATERIAL FROM THE FOLLOWING AND APPLY AS INDICATED:
2. DRY STRAW OR DRY HAY OF GOOD QUALITY AND FREE OF WEED SEEDS CAN BE USED. DRY STRAW SHALL BE APPLIED AT THE RATE OF 2 TONS PER ACRE. DRY HAY SHALL BE APPLIED AT A RATE OF 2 1/2 TONS PER ACRE.
3. WOOD CELLULOSE MULCH OR WOOD PULP FIBER SHALL BE USED WITH HYDRAULIC SEEDING. IT SHALL BE APPLIED AT THE RATE OF 500 POUNDS PER ACRE. DRYSTRAW OR DRY HAY SHALL BE APPLIED (AT THE RATE INDICATED ABOVE) AFTER HYDRAULIC SEEDING.
4. ONE THOUSAND POUNDS OF WOOD CELLULOSE OR WOOD PULP FIBER, WHICH INCLUDES A TACKIFIER, SHALL BE USED WITH HYDRAULIC SEEDING ON SLOPES 3/4:1 OR STEEPER.
5. SERICEA LESPEDEZA HAY CONTAINING MATURE SEED SHALL BE APPLIED AT A RATE OF THREE TONS PER ACRE.
6. PINE STRAW OR PINE BARK SHALL BE APPLIED AT A THICKNESS OF 3 INCHES FOR BEDDING PURPOSES. OTHER SUITABLE MATERIALS IN SUFFICIENT QUANTITY MAY BE USED WHERE ORNAMENTALS OR OTHER GROUND COVERS ARE PLANTED. THIS IS NOT APPROPRIATE FOR SEEDED AREAS.
7. WHEN USING TEMPORARY EROSION CONTROL BLANKETS OR BLOCK SOD, MULCH IS NOT REQUIRED.
8. BITUMINOUS TREATED ROVING MAY BE APPLIED ON PLANTED AREAS ON SLOPES, IN DITCHES OR DRY WATERWAYS TO PREVENT EROSION. BITUMINOUS TREATED ROVING SHALL BE APPLIED WITHIN 24 HOURS AFTER AN AREA HAS BEEN PLANTED. APPLICATION RATES AND MATERIALS MUST MEET GEORGIA DEPARTMENT OF TRANSPORTATION SPECIFICATIONS.
9. WOOD CELLULOSE AND WOOD PULP FIBERS SHALL NOT CONTAIN GERMINATION OR GROWTH INHIBITING FACTORS. THEY SHALL BE EVENLY DISPERSED WHEN AGITATED IN WATER. THE FIBERS SHALL CONTAIN A DYE TO ALLOW VISUAL METERING AND AID IN UNIFORM APPLICATION DURING SEEDING.

APPLYING MULCH
1. STRAW OR HAY MULCH WILL BE SPREAD UNIFORMLY WITHIN 24 HOURS AFTER SEEDING AND/OR PLANTING. THE MULCH MAY BE SPREAD BY BLOWER-TYPE SPREADING EQUIPMENT, OTHER SPREADING EQUIPMENT OR BY HAND. MULCH SHALL BE APPLIED TO COVER 75% OF THE SOIL SURFACE.
2. WOOD CELLULOSE OR WOOD FIBER MULCH SHALL BE APPLIED UNIFORMLY WITH HYDRAULIC SEEDING EQUIPMENT.

ANCHORING MULCH
1. ANCHOR STRAW OR HAY MULCH IMMEDIATELY AFTER APPLICATION BY ONE OF THE FOLLOWING METHODS:
2. EMULSIFIED ASPHALT CAN BE (A) SPRAYED UNIFORMLY ONTO THE MULCH AS IT IS EJECTED FROM THE BLOWER MACHINE OR (B) SPRAYED ON THE MULCH IMMEDIATELY FOLLOWING MULCH APPLICATION WHEN STRAW OR HAY IS SPREAD BY METHODS OTHER THAN SPECIAL BLOWER EQUIPMENT.
3. THE COMBINATION OF ASPHALT EMULSION AND WATER SHALL CONSIST OF A HOMOGENEOUS MIXTURE SATISFACTORY FOR SPRAYING. THE MIXTURE SHALL CONSIST OF 100 GALLONS OF GRADE SS-1H OR CSS-1H EMULSIFIED ASPHALT AND 100 GALLONS OF WATER PER TON OF MULCH.
4. CARE SHALL BE TAKEN AT ALL TIMES TO PROTECT STATE WATERS, THE PUBLIC, ADJACENT PROPERTY, PAVEMENTS, CURBS, SIDEWALKS, AND ALL OTHER STRUCTURES FROM ASPHALT DISCOLORATION.
5. HAY AND STRAW MULCH SHALL BE PRESSED INTO THE SOIL IMMEDIATELY AFTER THE MULCH IS SPREAD. A SPECIAL "PACKER DISK"' OR DISK HARROW WITH THE DISKS SET STRAIGHT MAY BE USED. THE DISKS MAY BE SMOOTH OR SERRATED AND SHOULD BE 20 INCHES OR MORE IN DIAMETER AND 8 TO 12 INCHES APART. THE EDGES OF THE DISKS SHALL BE DULL ENOUGH TO PRESS THE MULCH INTO THE GROUND WITHOUT CUTTING IT, LEAVING MUCH OF IT IN AN ERECT POSITION. MULCH SHALL NOT BE PLOWED INTO THE SOIL.
6. SYNTHETIC TACKIFIERS OR BINDERS APPROVED BY GDOT SHALL BE APPLIED IN CONJUNCTION WITH OR IMMEDIATELY AFTER THE MULCH IS SPREAD. SYNTHETIC TACKIFIERS SHALL BE MIXED AND APPLIED ACCORDING TO MANUFACTURER'S SPECIFICATIONS. REFER TO TB - TACKIFIERS AND BINDERS.
7. RYE OR WHEAT CAN BE INCLUDED WITH FALL AND WINTER PLANTINGS TO STABILIZE THE MULCH. THEY SHALL BE APPLIED AT A RATE OF ONE-QUARTER TO ONE HALF BUSHEL PER ACRE.
8. PLASTIC MESH OR NETTING WITH MESH NO LARGER THAN ONE INCH BY ONE INCH MAY BE NEEDED TO ANCHOR STRAW OR HAY MULCH ON UNSTABLE SOILS AND CONCENTRATED FLOW AREAS. THESE MATERIALS SHALL BE INSTALLED AND ANCHORED ACCORDING TO MANUFACTURER'S SPECIFICATIONS.

IRRIGATION
- IRRIGATION SHALL BE APPLIED AT A RATE THAT WILL NOT CAUSE RUNOFF.

Lime Application for PERMANENT COVER - **DS3**
Agricultural lime is required at the rate of **one to two tons per acre** unless soil tests indicate otherwise.

Georgia Soil & Water Conservation Commission
Manual for Erosion and Sediment Control in Georgia (amended 2000)
Table 6-5.2 - Plants, planting rates and planting dates for **PERMANENT COVER**
Major Land Resource Area (MLRA): *Southern Piedmont* (P), per Figure 6-4.1

Species	Broadcast Rates per acre (lbs.)	Broadcast Rates per 1000 sq.ft. (lbs.)	J	F	M	A	M	J	J	A	S	O	N	D	Remarks
Bermuda, common (Cynodon dactylon) - **Hulled**															
alone	10	0.2			-	X	X	-							1,787,000 see per pound. Quick cover. Low growing and sod forming. Full sun. Good
with other perennials	6	0.1													for athletic fields.
Bermuda, common (Cynodon dactylon) - **Unhulled**															
alone	10	0.2	X	X								X	X	X	Plant with winter annuals.
with other perennials	6	0.1													Plant with Tall fescue.
Fescue, tall (festuca arundinacea)															227,000 seed per pound. Use alone only on better sites. Not for droughty soils. Mix
alone	50	1.1								-	X	X			with perennial lespedezas or Crownvetch. Apply topdressing in spring following fall
with other perennials	30	0.7													plantings. Not for heavy use areas or athletic fields.
Lovegrass, weeping (Eragrosits curvula)															
alone	4	0.1			-	X	X	-							1,500,000 seed per pound. May last for several years. Grows well with Sericea
in mixtures	2	0.05													lespedeza on road banks.

* 'X' are optimum dates; '-' are permissible but marginal dates

GSWCC Georgia Soil and Water Conservation Commission
Christopher Hamblen
Level II Certified Design Professional
Certification Number: 0000069253 Expires: 08-21-2019
Issued: 08-21-2015

Know what's **below.**
Call before you dig.

GEORGIA REGISTERED No. 038034 PROFESSIONAL ENGINEER CHRISTOPHER S. HAMBLEN

ENGINEER OF RECORD

REVISIONS		
NO.	DATE	DESCRIPTION

CITY OF ATLANTA
DEPARTMENT OF WATERSHED MANAGEMENT
OFFICE OF ENGINEERING SERVICES

LOWER PROCTOR SEWER REPAIRS
EROSION AND SEDIMENT CONTROL DETAILS

SURVEYOR	FIELD BOOKS	L.L. DIST.	COUNTY	SCALE
DRAWN BY D CORBETT	DESIGNED BY A KINSEY	CHECKED BY C HAMBLEN	APPROVED BY T KELLEY	DATE NOV 2018

PROJECT NUMBER: 674854 SHEET: C-307 SHEET 11 OF 16

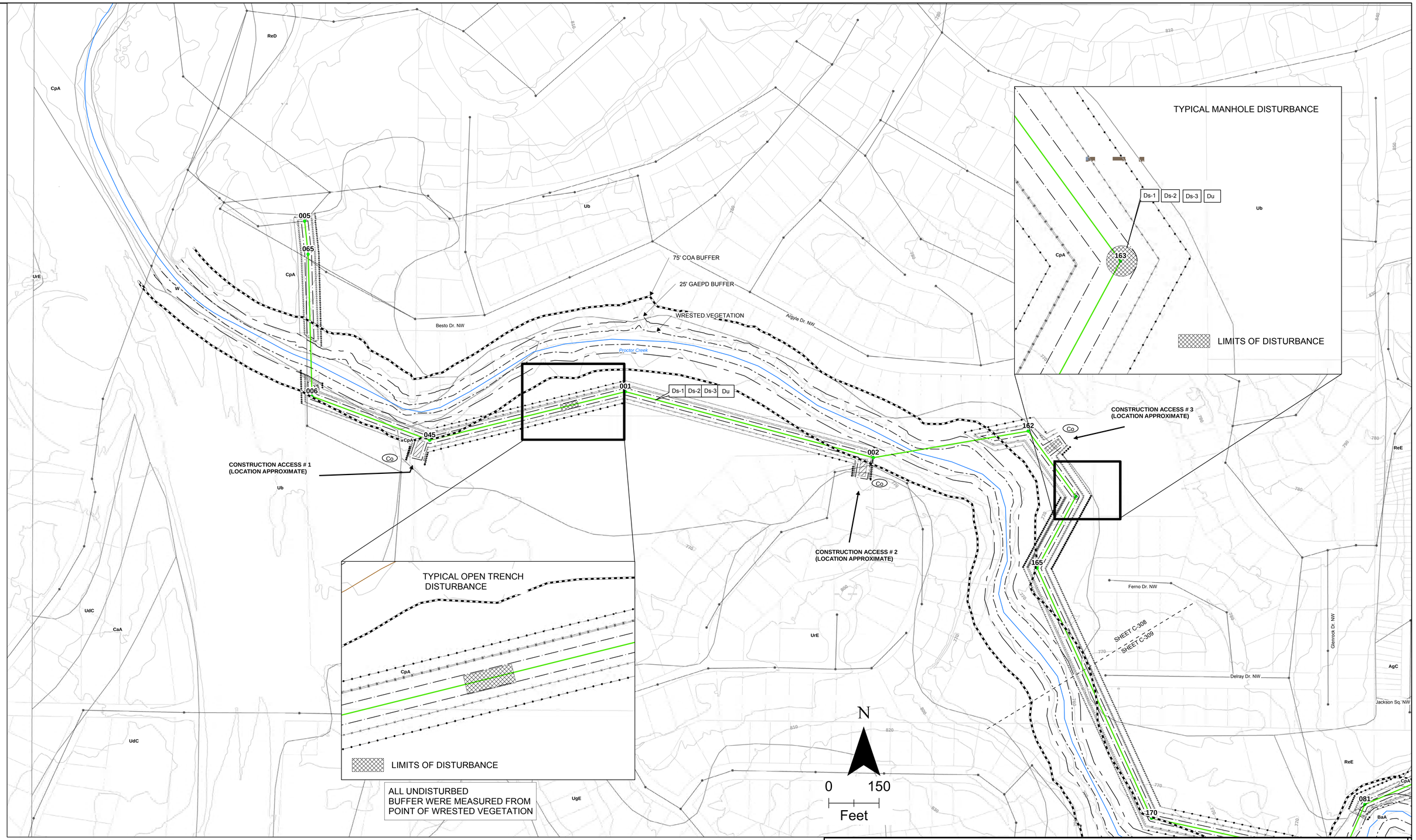

GENERAL NOTES:

1.PLANS BASED ON ASSUMPTION THAT ALL WORK IS PERFORMED IN EXISTING INFRASTRUCTURE MANHOLES. LAND DISTURBANCE ACTIVITIES WILL BE LIMITED TO NARROW AND NON-CONTINUOUS AREAS AROUND MANHOLES

2. SEDIMENT AND EROSION CONTROLS AND ACCESSS ROUTES SHOWN ON THIS DRAWING MAY BE FIELD ADJUSTED IF APPROVED BY BOTH THE ENGINEER AND THE CITY. THE CONTRACTOR SHALL BE RESPONSIBLE FOR STAKING THE PROPOSED LOCATIONS OF ALL CONSTRUCTION ACCESS ROUTES. THE ENGINEER, THE CITY, AND AFFECTED PROPERTY OWNERS SHALL BE IN AGREEMENT WITHTHE CONTRACTOR'S PROPOSED ACCESS ROUTES PRIOR TO PROCEEDING WITH ANY ACTIVITIES.

3. ALL CLEARING ACTIVITIES WITHIN THE CONSTRUCTION AREA WILL BE CLEARED BY HAND TO AVOID ANY LAND DISTURBANCES.

4.CONTRACTOR TO MAINTAIN A 25-FOOT BUFFER FROM WRESTED VEGETATION, OR APPLY FOR A STREAM BUFFER VARIANCE.

5. SEDIMENT BARRIERS HAVE BEEN DELIBERATELY OFFSET FROM THE LIMITS OF CONSTRUCTION FOR VISUALIZATION PURPOSES. SILT FENCE AND ORANGE BARRIER FENCE SHALL BE PLACED 2' INSIDE OF LIMITS OF CONSTRUCTION OR 1' INSIDE EDGE OF PAVEMENT AS NEEDED TO PROTECT FROM RUNOFF.

Legend

- LOWER PROCTOR MANHOLES
- SANITARY SEWER STRUCTURE
- MATCHLINE
- PROCTOR CREEK
- ELEVATION CONTOUR
- WRESTED VEGETATION
- LOWER PROCTOR SEWER PIPES
- SANITARY SEWER MAIN
- APPROXIMATE 75' CITY OF ATLANTA BUFFER
- APPROXIMATE 25' CITY OF ATLANTA BUFFER
- LIMITES OF CONSTRUCTION
- PARCELS
- SOILS
- CONSTRUCTION ACCESS

ch2m | ROH&DFOX A JOINT VENTURE

811 Know what's below. Call before you dig.

GEORGIA REGISTERED No. 038034 PROFESSIONAL ENGINEER CHRISTOPHER S. HAMBLEN

ENGINEER OF RECORD

REVISIONS		
NO.	DATE	DESCRIPTION

CITY OF ATLANTA
DEPARTMENT OF WATERSHED MANAGEMENT
OFFICE OF ENGINEERING SERVICES

LOWER PROCTOR SEWER REPAIRS
EROSION AND SEDIMENT CONTROL PLAN

SURVEYOR	FIELD BOOKS	L.L. DIST.	COUNTY	SCALE
			FULTON	NTS
DRAWN BY G. BOQUIN	DESIGNED BY C. NORRIS	CHECKED BY A. BOYD	APPROVED BY T. KELLEY	DATE NOV 2018

PROJECT NUMBER 674854 | Sheet : C-308 | SHEET 12 OF 16

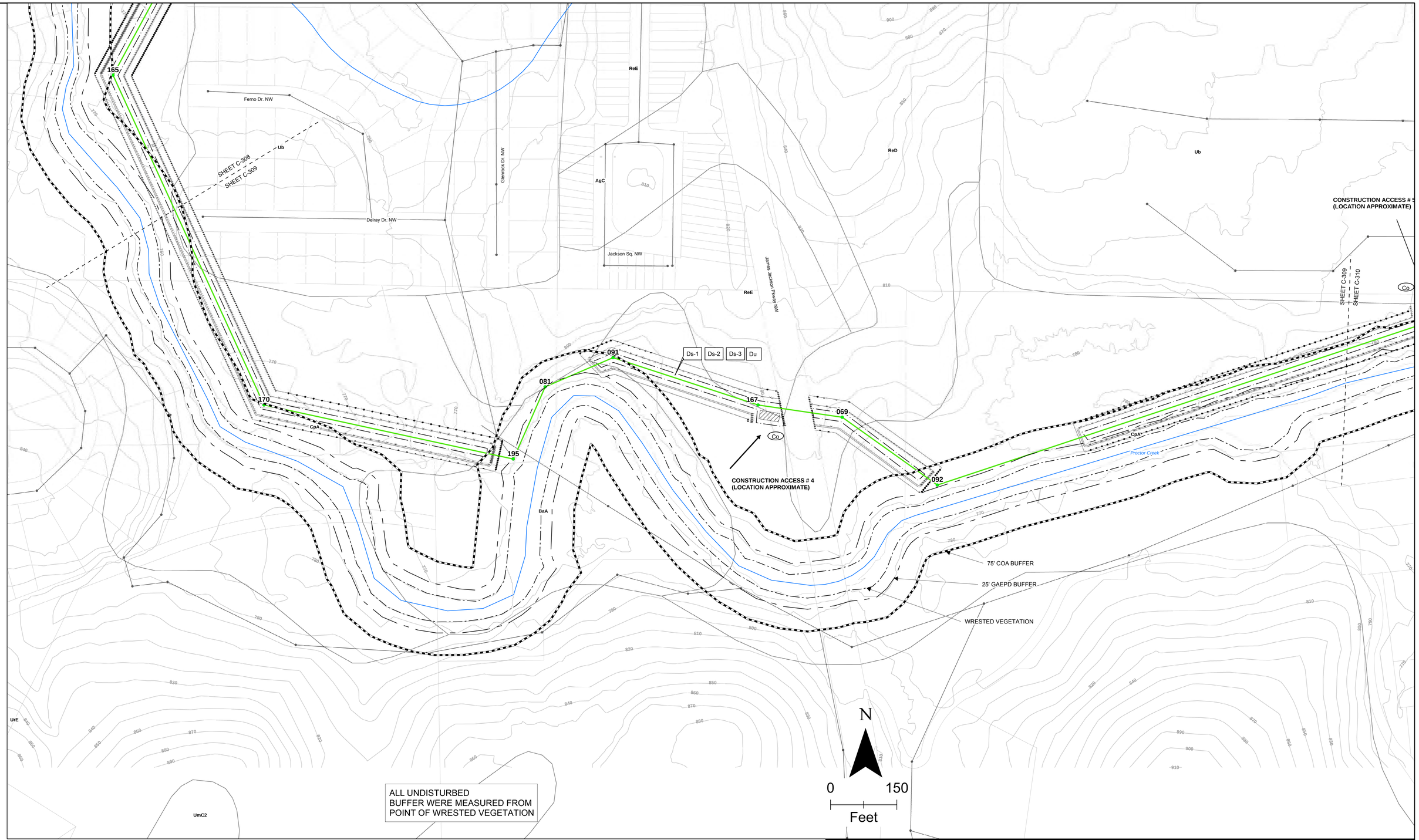

GENERAL NOTES:

1PLANS BASED ON ASSUMPTION THAT ALL WORK IS PERFORMED IN EXISTING INFRASTRUCTURE MANHOLES. LAND DISTURBANCE ACTIVITIES WILL BE LIMITED TO NARROW AND NON-CONTINUOUS AREAS AROUND MANHOLES.

2. SEDIMENT AND EROSION CONTROLS AND ACCESSS ROUTES SHOWN ON THIS DRAWING MAY BE FIELD ADJUSTED IF APPROVED BY BOTH THE ENGINEER AND THE CITY. THE CONTRACTOR SHALL BE RESPONSIBLE FOR STAKING THE PROPOSED LOCATIONS OF ALL CONSTRUCTION ACCESS ROUTES. THE ENGINEER, THE CITY, AND AFFECTED PROPERTY OWNERS SHALL BE IN AGREEMENT WITHTHE CONTRACTOR'S PROPOSED ACCESS ROUTES PRIOR TO PROCEEDING WITH ANY ACTIVITIES.

3. ALL CLEARING ACTIVITIES WITHIN THE CONSTRUCTION AREA WILL BE CLEARED BY HAND TO AVOID ANY LAND DISTURBANCES.

4.CONTRACTOR TO MAINTAIN A 25-FOOT BUFFER FROM WRESTED VEGETATION, OR APPLY FOR A STREAM BUFFER VARIANCE.

5. SEDIMENT BARRIERS HAVE BEEN DELIBERATELY OFFSET FROM THE LIMITS OF CONSTRUCTION FOR VISUALIZATION PURPOSES. SILT FENCE AND ORANGE BARRIER FENCE SHALL BE PLACED 2' INSIDE OF LIMITS OF CONSTRUCTION OR 1' INSIDE EDGE OF PAVEMENT AS NEEDED TO PROTECT FROM RUNOFF.

Legend

- LOWER PROCTOR MANHOLES
- SANITARY SEWER STRUCTURE
- MATCHLINE
- PROCTOR CREEK
- ELEVATION CONTOUR
- WRESTED VEGETATION
- LOWER PROCTOR SEWER PIPES
- SANITARY SEWER MAIN
- APPROXIMATE 75' CITY OF ATLANTA BUFFER
- APPROXIMATE 25' CITY OF ATLANTA BUFFER
- LIMITES OF CONSTRUCTION
- PARCELS
- SOILS
- CONSTRUCTION ACCESS

ch2m ROH&DFOX

811 Know what's below. Call before you dig.

GEORGIA REGISTERED No. 038034 PROFESSIONAL ENGINEER CHRISTOPHER S. HAMBLEN

ENGINEER OF RECORD

REVISIONS		
NO.	DATE	DESCRIPTION

CITY OF ATLANTA
DEPARTMENT OF WATERSHED MANAGEMENT
OFFICE OF ENGINEERING SERVICES

LOWER PROCTOR SEWER REPAIRS
EROSION AND SEDIMENT CONTROL PLAN

SURVEYOR	FIELD BOOKS	L.L. DIST.	COUNTY FULTON	SCALE NTS
DRAWN BY G. BOQUIN	DESIGNED BY C. NORRIS	CHECKED BY A. BOYD	APPROVED BY T. KELLEY	DATE NOV 2018
PROJECT NUMBER 674854		Sheet : C-309		SHEET 13 OF 16

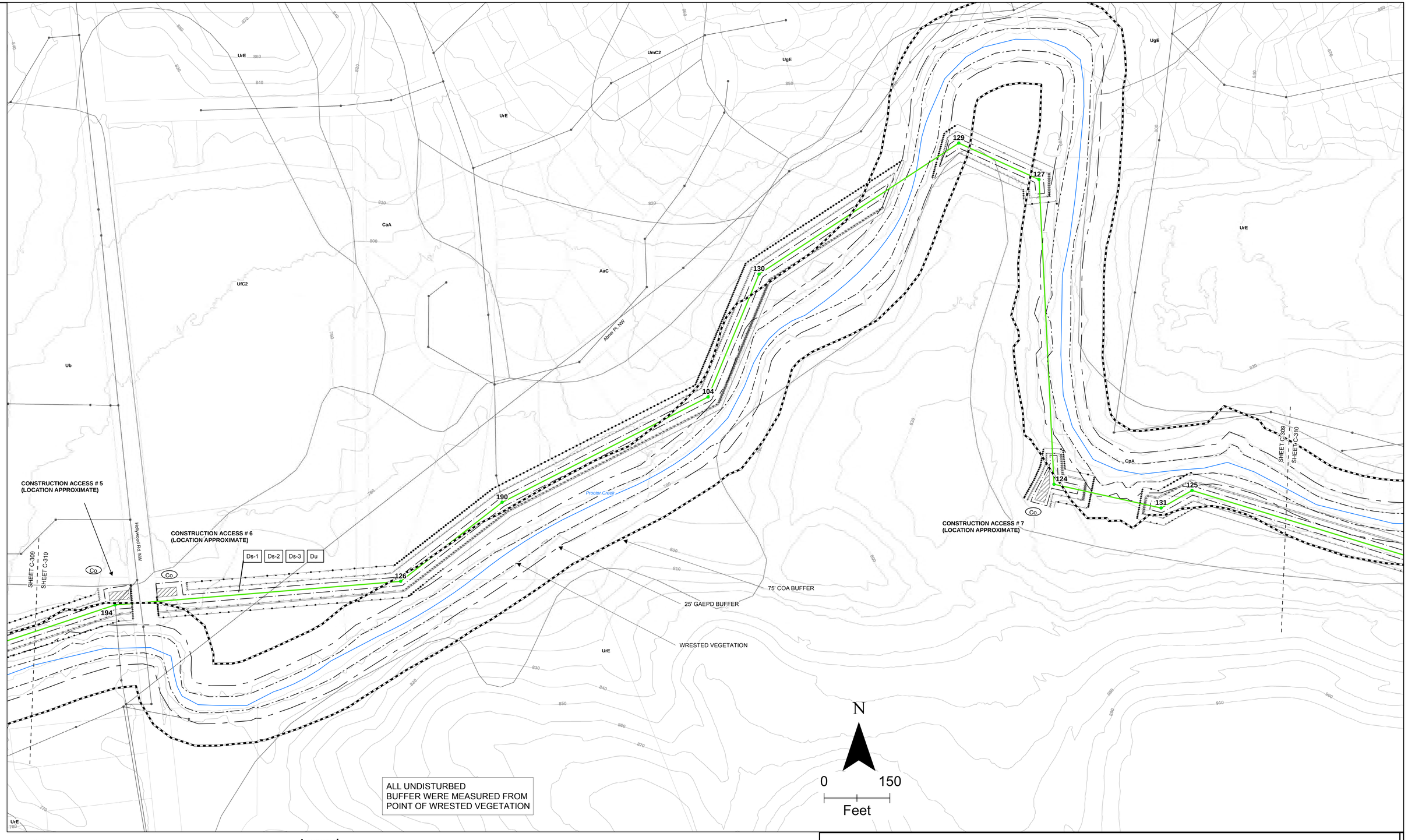

GENERAL NOTES:
1PLANS BASED ON ASSUMPTION THAT ALL WORK IS PERFORMED IN EXISTING INFRASTRUCTURE MANHOLES. LAND DISTURBANCE ACTIVITIES WILL BE LIMITED TO NARROW AND NON-CONTINUOUS AREAS AROUND MANHOLES.

2. SEDIMENT AND EROSION CONTROLS AND ACCESSS ROUTES SHOWN ON THIS DRAWING MAY BE FIELD ADJUSTED IF APPROVED BY BOTH THE ENGINEER AND THE CITY. THE CONTRACTOR SHALL BE RESPONSIBLE FOR STAKING THE PROPOSED LOCATIONS OF ALL CONSTRUCTION ACCESS ROUTES. THE ENGINEER, THE CITY, AND AFFECTED PROPERTY OWNERS SHALL BE IN AGREEMENT WITHTHE CONTRACTOR'S PROPOSED ACCESS ROUTES PRIOR TO PROCEEDING WITH ANY ACTIVITIES.

3. ALL CLEARING ACTIVITIES WITHIN THE CONSTRUCTION AREA WILL BE CLEARED BY HAND TO AVOID ANY LAND DISTURBANCES.

4.CONTRACTOR TO MAINTAIN A 25-FOOT BUFFER FROM WRESTED VEGETATION, OR APPLY FOR A STREAM BUFFER VARIANCE.

5. SEDIMENT BARRIERS HAVE BEEN DELIBERATELY OFFSET FROM THE LIMITS OF CONSTRUCTION FOR VISUALIZATION PURPOSES. SILT FENCE AND ORANGE BARRIER FENCE SHALL BE PLACED 2' INSIDE OF LIMITS OF CONSTRUCTION OR 1' INSIDE EDGE OF PAVEMENT AS NEEDED TO PROTECT FROM RUNOFF.

Legend

- LOWER PROCTOR MANHOLES
- SANITARY SEWER STRUCTURE
- MATCHLINE
- PROCTOR CREEK
- ELEVATION CONTOUR
- WRESTED VEGETATION
- LOWER PROCTOR SEWER PIPES
- SANITARY SEWER MAIN
- APPROXIMATE 75' CITY OF ATLANTA BUFFER
- APPROXIMATE 25' CITY OF ATLANTA BUFFER
- LIMITES OF CONSTRUCTION
- PARCELS
- SOILS
- CONSTRUCTION ACCESS

ch2m ROH&DFOX

811 Know what's below. Call before you dig.

GEORGIA REGISTERED No. 038034 PROFESSIONAL ENGINEER CHRISTOPHER S. HAMBLEN

ENGINEER OF RECORD

REVISIONS		
NO.	DATE	DESCRIPTION

CITY OF ATLANTA
DEPARTMENT OF WATERSHED MANAGEMENT
OFFICE OF ENGINEERING SERVICES

LOWER PROCTOR SEWER REPAIRS
EROSION AND SEDIMENT CONTROL PLAN

SURVEYOR	FIELD BOOKS	L.L. DIST.	COUNTY FULTON	SCALE NTS
DRAWN BY G. BOQUIN	DESIGNED BY C. NORRIS	CHECKED BY A. BOYD	APPROVED BY T. KELLEY	DATE NOV 2018
PROJECT NUMBER 674854		Sheet : C-310		SHEET 14 OF 16

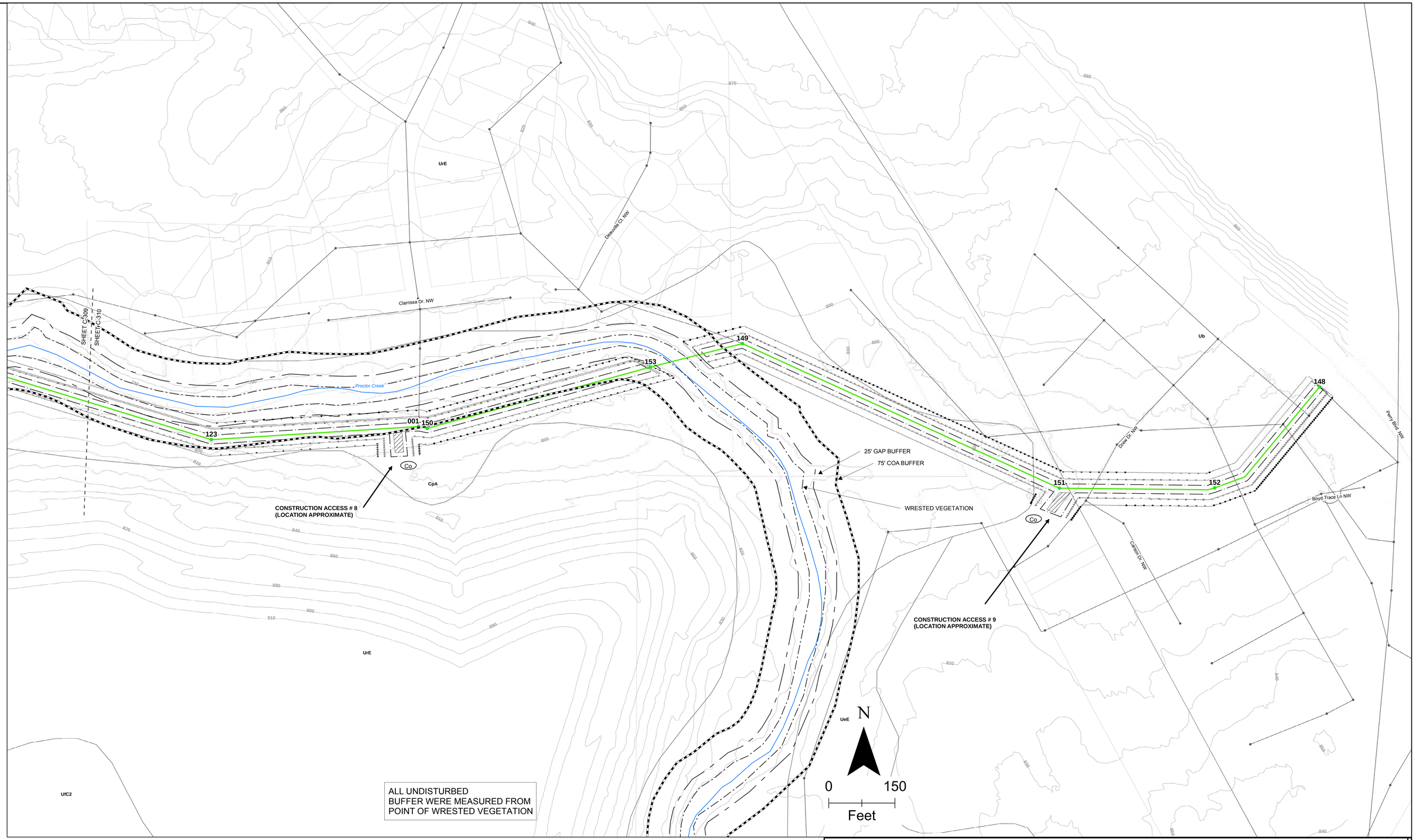

GENERAL NOTES:
1PLANS BASED ON ASSUMPTION THAT ALL WORK IS PERFORMED IN EXISTING INFRASTRUCTURE MANHOLES. LAND DISTURBANCE ACTIVITIES WILL BE LIMITED TO NARROW AND NON-CONTINUOUS AREAS AROUND MANHOLES.

2. SEDIMENT AND EROSION CONTROLS AND ACCESSS ROUTES SHOWN ON THIS DRAWING MAY BE FIELD ADJUSTED IF APPROVED BY BOTH THE ENGINEER AND THE CITY. THE CONTRACTOR SHALL BE RESPONSIBLE FOR STAKING THE PROPOSED LOCATIONS OF ALL CONSTRUCTION ACCESS ROUTES. THE ENGINEER, THE CITY, AND AFFECTED PROPERTY OWNERS SHALL BE IN AGREEMENT WITHTHE CONTRACTOR'S PROPOSED ACCESS ROUTES PRIOR TO PROCEEDING WITH ANY ACTIVITIES.

3. ALL CLEARING ACTIVITIES WITHIN THE CONSTRUCTION AREA WILL BE CLEARED BY HAND TO AVOID ANY LAND DISTURBANCES.

4.CONTRACTOR TO MAINTAIN A 25-FOOT BUFFER FROM WRESTED VEGETATION, OR APPLY FOR A STREAM BUFFER VARIANCE.

5. SEDIMENT BARRIERS HAVE BEEN DELIBERATELY OFFSET FROM THE LIMITS OF CONSTRUCTION FOR VISUALIZATION PURPOSES. SILT FENCE AND ORANGE BARRIER FENCE SHALL BE PLACED 2' INSIDE OF LIMITS OF CONSTRUCTION OR 1' INSIDE EDGE OF PAVEMENT AS NEEDED TO PROTECT FROM RUNOFF.

Legend

- LOWER PROCTOR MANHOLES
- SANITARY SEWER STRUCTURE
- MATCHLINE
- PROCTOR CREEK
- ELEVATION CONTOUR
- WRESTED VEGETATION
- LOWER PROCTOR SEWER PIPES
- SANITARY SEWER MAIN
- APPROXIMATE 75' CITY OF ATLANTA BUFFER
- APPROXIMATE 25' CITY OF ATLANTA BUFFER
- LIMITES OF CONSTRUCTION
- PARCELS
- SOILS
- CONSTRUCTION ACCESS

ch2m ROHADFOX A JOINT VENTURE

811 Know what's below. Call before you dig.

GEORGIA REGISTERED No. 038034 PROFESSIONAL ENGINEER CHRISTOPHER S. HAMBLEN

ENGINEER OF RECORD

REVISIONS		
NO.	DATE	DESCRIPTION

CITY OF ATLANTA
DEPARTMENT OF WATERSHED MANAGEMENT
OFFICE OF ENGINEERING SERVICES

LOWER PROCTOR SEWER REPAIRS
EROSION AND SEDIMENT CONTROL PLAN

SURVEYOR	FIELD BOOKS	L.L. DIST.	COUNTY FULTON	SCALE NTS
DRAWN BY G. BOQUIN	DESIGNED BY C. NORRIS	CHECKED BY A. BOYD	APPROVED BY T. KELLEY	DATE NOV 2018

PROJECT NUMBER 674854 | Sheet : C-311 | SHEET 15 OF 16

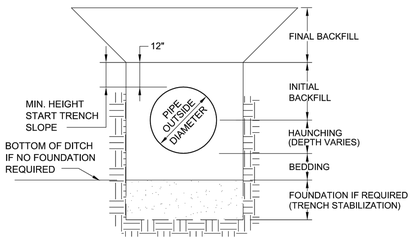

NOTE: SEE SPECIFICATIONS SECTION 02225 AND DETAILS NO. G-2 & G-3 FOR DIMENSIONS AND MATERIALS

U:\2002 Std Sewer Details\FINISHED\G-1 GTO01PD4.DWG 12/6/2004 2:09:45 PM EST

City of Atlanta Department of Public Works

STANDARD DETAILS

TRENCH TERMINOLOGY

DATE : JAN 1997
SCALE : NONE
DETAIL NO. G-1

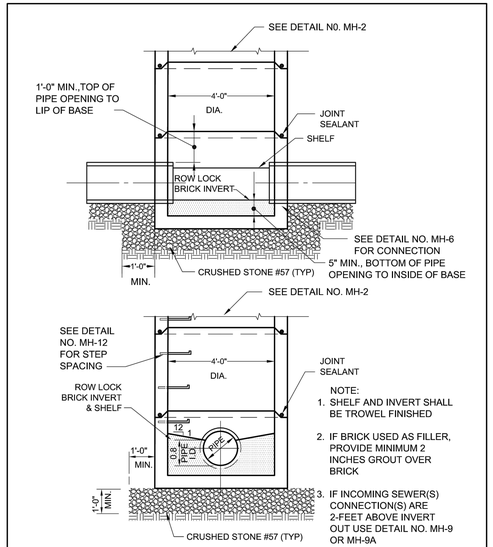

NOTE:
1. SHELF AND INVERT SHALL BE TROWEL FINISHED
2. IF BRICK USED AS FILLER, PROVIDE MINIMUM 2 INCHES GROUT OVER BRICK
3. IF INCOMING SEWER(S) CONNECTION(S) ARE 2-FEET ABOVE INVERT OUT USE DETAIL NO. MH-9 OR MH-9A

U:\2002 Std Sewer Details\FINISHED\MH-1 GTO01PDB.dwg 12/6/2004 2:25:30 PM EST

City of Atlanta Department of Public Works

STANDARD DETAILS

MANHOLE BASE

DATE : NOV 2004
SCALE : NONE
DETAIL NO. MH-1

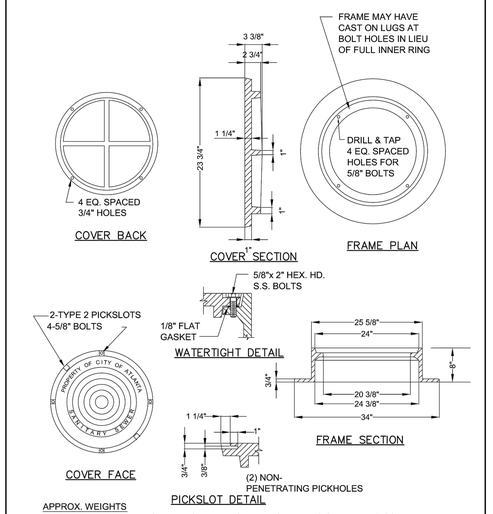

APPROX. WEIGHTS
COVER 178 LBS.
FRAME 292 LBS.
TOTAL 470 LBS.

NOTE: PROVIDE RAISED MATCH MARKS ON FRAME & COVER; TWO PICK HOLES ON SIDE OF COVER & CORRUGATIONS. NO PERFORATIONS.

U:\2002 Std Sewer Details\FINISHED\MH-5 GTO01PD2.dwg 12/6/2004 2:30:31 PM EST

City of Atlanta Department of Public Works

STANDARD DETAILS

WATERTIGHT FRAME AND COVER

DATE : NOV 2004
SCALE : NONE
DETAIL NO. MH-5

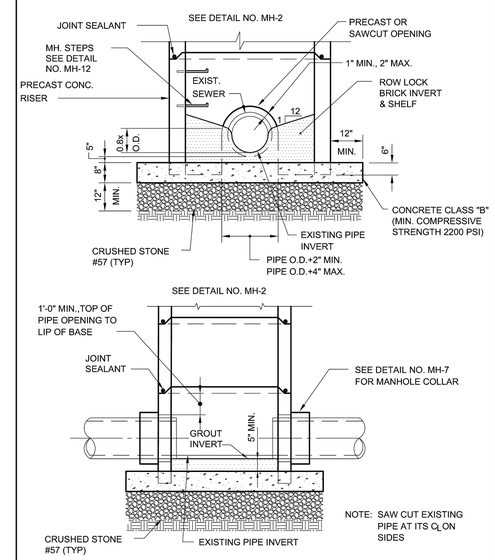

NOTE: SAW CUT EXISTING PIPE AT ITS ℄ ON SIDES

U:\2002 Std Sewer Details\FINISHED\MH-10 GTO01P12.DWG 12/6/2004 2:41:11 PM EST

City of Atlanta Department of Public Works

STANDARD DETAILS

MANHOLE OVER EXISTING SEWER

DATE : NOV 2004
SCALE : NONE
DETAIL NO. MH-10

GTO01P07
01/24/05
COLOSTER

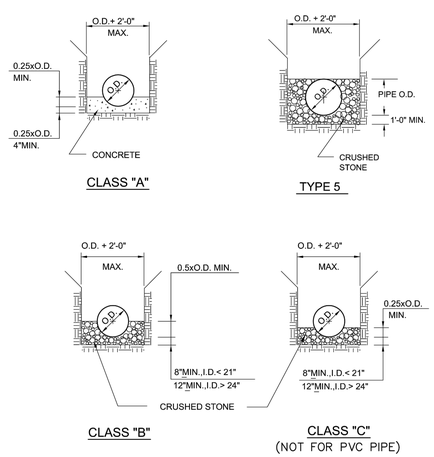

U:\2002 Std Sewer Details\FINISHED\G-2 GTO01PD7.DWG 12/6/2004 2:10:40 PM EST

City of Atlanta Department of Public Works

STANDARD DETAILS

SEWER BEDDING AND HAUNCHING

DATE : JAN 1997
SCALE : NONE
DETAIL NO. G-2

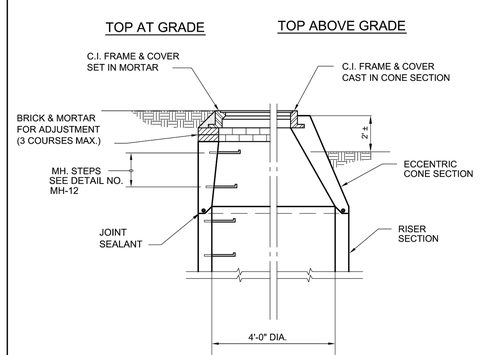

NOTE: FRAME & COVER SHALL BE CAST IN ALL CONE SECTIONS UNLESS FRAME & COVER IS TO BE FLUSH WITH FINAL GRADE.

U:\2002 Std Sewer Details\FINISHED\MH-2 GTO01P23.dwg 12/6/2004 2:26:32 PM EST

City of Atlanta Department of Public Works

STANDARD DETAILS

MANHOLE RISER AND CONE

DATE : JAN 1997
SCALE : NONE
DETAIL NO. MH-2

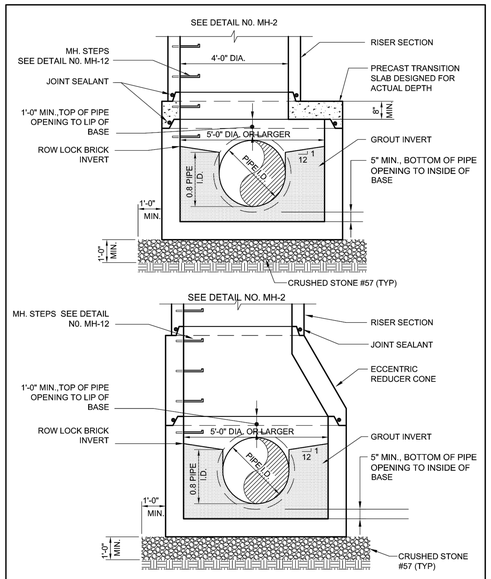

U:\2002 Std Sewer Details\FINISHED\MH-8 GTO01P22.dwg 12/6/2004 2:38:31 PM EST

City of Atlanta Department of Public Works

STANDARD DETAILS

LARGE DIAMETER MANHOLE BASE

DATE : NOV 2004
SCALE : NONE
DETAIL NO. MH-8

GTO01P09
01/24/05
COLOSTER

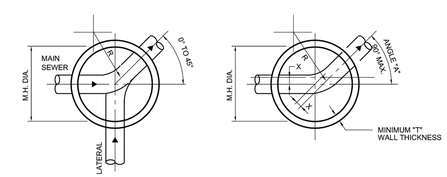

STANDARD MANHOLE SCHEDULE OF GOVERNING DIMENSIONS

PIPE SIZE	ANGLE "A"	MH. DIA.	"T"	"X"
8" TO 15"	0° TO 90°	4'-0"	5"	0"
18" TO 24"	0° TO 60°	4'-0"	5"	0"
18" TO 24"	60° TO 90°	5'-0"	6"	6"
27" TO 30"	0° TO 30°	5'-0"	6"	0"
27" TO 30"	30° TO 60°	5'-0"	6"	6"
27" TO 30"	60° TO 90°	6'-0"	7"	8"
36"	0° TO 90°	6'-0"	7"	0"
42"	0° TO 60°	7'-0"	8"	8"
42"	60° TO 90°	8'-0"	9"	6"
48"	0° TO 45°	8'-0"	9"	6"
48"	60° TO 90°	12'-0"	13"	6"
54"	0° TO 60°	8'-0"	9"	6"
54"	60° TO 90°	12'-0"	13"	6"
60"	0° TO 30°	8'-0"	9"	0"
60"	30° TO 45°	8'-0"	9"	6"
60"	45° TO 60°	10'-0"	11"	6"
60"	60° TO 90°	12'-0"	13"	8"

NOTE:
MINIMUM℄ RADIUS (R) OF M.H. INVERT
= 1.5 x PIPE DIAMETER

U:\2002 Std Sewer Details\FINISHED\MH-13 GTO01PD9.dwg 12/6/2004 2:43:22 PM EST

City of Atlanta Department of Public Works

STANDARD DETAILS

MANHOLE PLAN & DIAMETERS

DATE : JAN 1997
SCALE : NONE
DETAIL NO. MH-13

ch2m | ROLADFOX & ASSOCIATES

811 Know what's below. Call before you dig.

GEORGIA REGISTERED No. 013814 PROFESSIONAL ENGINEER ROY THOMAS KELLEY

ENGINEER OF RECORD

REVISIONS

NO.	DATE	DESCRIPTION

CITY OF ATLANTA
DEPARTMENT OF WATERSHED MANAGEMENT
OFFICE OF ENGINEERING SERVICES

LOWER PROCTOR SEWER REPAIRS
STANDARD DETAILS

SURVEYOR	FIELD BOOKS	L.L. DIST.	COUNTY	SCALE
DRAWN BY D CORBETT	DESIGNED BY C NORRIS	CHECKED BY A BOYD	APPROVED BY T KELLEY	DATE NOV 2018

PROJECT NUMBER: 674854 SHEET: C-312 SHEET 16 OF 16