COPYRIGHT © WK DICKSON & CO., INC. ALL RIGHTS RESERVED. REPRODUCTION OR USE OF THE CONTENTS OF THIS DOCUMENT, ADDITIONS OR DELETIONS TO THIS DOCUMENT, IN WHOLE OR IN PART, WITHOUT WRITTEN CONSENT OF WK DICKSON & CO., INC., IS PROHIBITED. ONLY COPIES FROM THE ORIGINAL OF THIS DOCUMENT, MARKED WITH AN ORIGINAL SIGNATURE AND SEAL SHALL BE CONSIDERED TO BE VALID, TRUE COPIES.

KILLIAN CREEK WWTP PHASE 3 UPGRADE

FOR

LINCOLN COUNTY, NORTH CAROLINA

SEPT. 2018

WK DICKSON NO.: 20170294.00.CL

CWSRF PROJECT NO. CS 370825-02

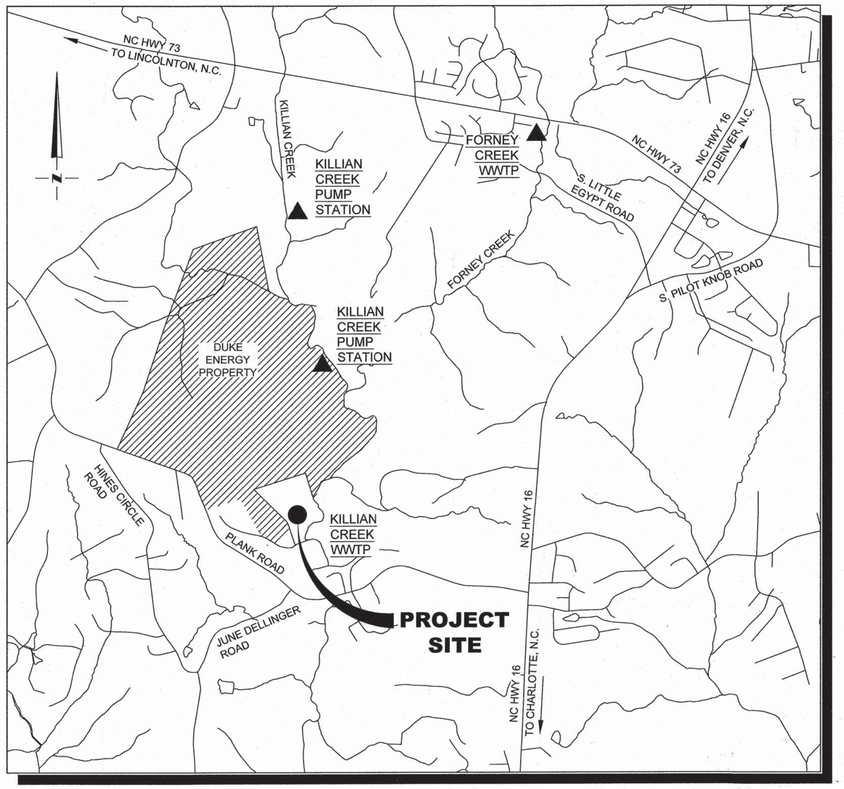

VICINITY MAP

NOT TO SCALE

LINCOLN COUNTY

115 WEST MAIN STREET
LINCOLNTON, NC 28092

BOARD OF COMMISSIONERS

BILL BEAM - CHAIRMAN
MARTIN OAKES - VICE CHAIRMAN
ANITA McCALL - COMMISSIONER
CARROL MITCHEM - COMMISSIONER
RICHARD PERMENTER - COMMISSIONER
AMY ATKINS - CLERK TO THE BOARD
KELLY ATKINS - COUNTY MANAGER
DON CHAMBLEE - DIRECTOR OF PUBLIC WORKS

NOTICE TO CONTRACTOR

1) PRIOR TO CONSTRUCTION, DIGGING, OR EXCAVATION THE CONTRACTOR IS RESPONSIBLE FOR LOCATING ALL UNDERGROUND UTILITIES (PUBLIC OR PRIVATE) THAT MAY EXIST AND CROSS THROUGH THE AREA(S) OF CONSTRUCTION, WHETHER INDICATED ON THE PLANS OR NOT. CALL "811" A MINIMUM OF 72 HOURS PRIOR TO DIGGING OR EXCAVATING. REPAIRS TO ANY UTILITY DAMAGED RESULTING FROM CONSTRUCTION ACTIVITIES SHALL BE THE RESPONSIBILITY OF THE CONTRACTOR.

WK DICKSON
community infrastructure consultants

811
Know what's below.
Call before you dig

FINAL DRAWINGS - NOT RELEASED FOR CONSTRUCTION

WK DICKSON
community infrastructure consultants
616 COLONNADE DRIVE
CHARLOTTE, NC 28205
(t)704-334-5348
(f)704-334-0078
WWW.WKDICKSON.COM
NC LICENSE NO.F-0374

NORTH CAROLINA PROFESSIONAL SEAL 8802 11-5-18 ENGINEER CHARLES F. FLOWERS
PROFESSIONAL SEAL

REVISION RECORD

NO.	DATE	DESCRIPTION	BY
A	10/9/18	ISSUE FOR OWNER/NCDEQ REVIEW	CRF

PROJECT NAME: KILLIAN CREEK WWTP PHASE 3 UPGRADE

DRAWING TITLE: COVER SHEET

PROJ. MGR.:	CRF
DESIGN BY:	CRF
DRAWN BY:	NS/CH
PROJ. DATE:	SEPT. 2018

DRAWING NUMBER: C.0 OF 168

WKD PROJ. NO.: 20170294.00.CL

COPYRIGHT © W.K. DICKSON & CO., INC., ALL RIGHTS RESERVED. REPRODUCTION OR USE OF THIS CONTENTS OF THIS DOCUMENT, ADDITIONS OR CHANGES TO THIS DOCUMENT WITHOUT WRITTEN CONSENT OF W.K. DICKSON & CO., INC. IS PROHIBITED. ADDITIONS OR CHANGES TO THIS DOCUMENT MARKED WITH AN ORIGINAL SIGNATURE AND SEAL SHALL BE CONSIDERED TO BE VALID, TRUE COPIES FROM THE ORIGINAL OF THIS DOCUMENT.

LEGEND

EXISTING	DESCRIPTION	PROPOSED
	RIGHT-OF-WAY LINE	
SBACK	SETBACK	
	PERMANENT EASEMENT	PE
	CONSTRUCTION EASEMENT	CE
PDE	PERMANENT DRAINAGE EASEMENT	PDE
	INDEX CONTOUR	100
	INTERVAL CONTOUR	96
12" RCP	STORM SEWER LINE RCP = REINFORCED CONCRETE PIPE CMP = CORRUGATED METAL PIPE	
	STORM DRAINAGE STRUCTURE	
	STORM DRAINAGE MANHOLE	
	ROOF DRAIN	RD
	HYDROLOGIC FEATURE	
	FENCE	
	GUARDRAIL	
	RAILROAD LINE	
	SIGN	
	CURB AND GUTTER	
	CONCRETE WALK/PAD	
	HEAVY-DUTY ASPHALT	
	LIGHT-DUTY ASPHALT	
	FORCE MAIN	
	GRAVITY SEWER	
	SANITARY SEWER MANHOLE	
C.O.	SANITARY SEWER CLEAN OUT	C.O.
	PLUG VALVE	
BB	BOTTOM OF BANK	BB
TB	TOP OF BANK	TB
	DITCH LINE	
OW	OVERHEAD WIRE	OW
UE	UNDERGROUND ELECTRIC	UE
FO	FIBER OPTIC CABLE	FO
4"G	UNDERGROUND GAS	G
T	UNDERGROUND TELEPHONE	UT
	POWER POLE	
	LIGHT POLE	
	GUY WIRE	
	SHRUB LINE	
	TREE LINE	
	WATER LINE	
WV	GATE VALVE	
	WATER METER	
	FIRE HYDRANT	
	UNDERGROUND UTILITY LINE E = ELECTRIC FM = FORCE MAIN G = GAS SS = SANITARY SEWER T = TELEPHONE TS = GAS TEST STATION W = WATER	
TP	TELEPHONE PEDESTAL	
X	FENCE	
C	LIMIT OF CUT SECTION	C
F	LIMIT OF FILL SECTION	F
	PERMANENT DIVERSION DITCH	
	TEMPORARY DIVERSION DITCH	TDD
	TEMPORARY SILT FENCE	
	TREE	
	SHRUB	
	SOIL BORE	
ELEV X	SPOT ELEVATION	ELEV X
	BENCHMARK ELEVATION	
	CHECK DAM	
	TEMPORARY SEDIMENT TRAP	
	RIP-RAP	
	TEMPORARY SEEDING	TS
	PERMANENT SEEDING	PS
	TELEPHONE PEDESTAL	
	TELEVISION PEDESTAL	
	FIBER OPTIC PEDESTAL	
	MAILBOX	
	BENCHMARK	

GENERAL NOTES

1. THE ENGINEER HAS MADE ALL POSSIBLE ATTEMPTS TO LOCATE EXISTING UTILITIES. IT IS THE CONTRACTOR'S RESPONSIBILITY TO FIELD-VERIFY THE LOCATIONS OF ALL UTILITIES PRIOR TO CONSTRUCTION AND TO NOTE ANY CONFLICTS. ANY DAMAGE TO UTILITIES INCURRED DURING CONSTRUCTION IS THE RESPONSIBILITY OF THE CONTRACTOR AND IS TO BE REPAIRED AT THE CONTRACTOR'S EXPENSE.
2. MINIMUM SEPARATION DISTANCES FOR SANITARY SEWER LINES FROM:
   A. WATER LINES - 18" VERTICAL OR 10' HORIZONTAL
   B. STORM SEWERS - 12" VERTICAL
3. D.I.P. WITH MECHANICAL JOINT ENDS MAY BE SUBSTITUTED WHERE SEPARATION DISTANCES BETWEEN THE SANITARY SEWER LINE AND WATER LINE OR STORM SEWER CANNOT BE MAINTAINED. PIPE MUST BE LAID SUCH THAT FULL SECTIONS OF PIPE ARE CENTERED ON THE CROSSING POINT AND EXTEND A DISTANCE OF 10' ON EACH SIDE OF THE POINT OF CROSSING.
4. ALL PROCESS WATER PIPELINES TO BE RESTRAINED AT EVERY JOINT.
5. ALL PROCESS WATER PIPELINES UNDER STRUCTURES TO BE RESTRAINED JOINT AND CONCRETE ENCASED.
6. DISTANCES NOTED ON PLANS ARE FROM CENTERLINE TO CENTERLINE OF MANHOLES.
7. ALL MANHOLE RIM ELEVATIONS ARE APPROXIMATE. MAKE MANHOLE COVERS "FLUSH", OR SLIGHTLY ABOVE FINISHED GRADE. THE SURROUND- ING GRADE SHOULD BE SLOPED GENTLY AWAY FROM THE COVER TO PROVIDE POSITIVE SURFACE DRAINAGE AWAY FROM THE MANHOLE COVER. THIS MUST BE PROVIDED ON ALL INSTALLATIONS UNLESS NOTED ON THE PLANS OR DIRECTED BY THE ENGINEER.
8. SEWER SERVICE LATERALS ARE SHOWN AT ANTICIPATED LOCATIONS. CONTRACTOR SHALL COORDINATE FINAL LOCATIONS WITH PROPERTY OWNERS TO BEST SERVE THE PROPERTY.
9. PAVEMENT PATCHING AND RESURFACING MUST BE COMPLETED WITHIN 5 DAYS AFTER COMPLETION OF TRENCHING ACTIVITIES. SMALL PATCH AREAS CAN BE MAINTAINED WITH TEMPORARY PAVEMENT PATCHING OR CABC STONE UNTIL PERMANENT PATCHING IS COMPLETE.
10. N.C.D.O.T. CLASS I RIP RAP SHALL BE PLACED AT ALL CREEK CROSSINGS ON CREEK BANKS AND EXTENDING DOWN TO THE CREEK WATER LINE. THE TOP OF RIP RAP PLACED SHALL BE FLUSH WITH THE TOP OF EXISTING BANKS; WIDTH OF RIP RAP SHALL EQUAL WIDTH OF DISTURBED AREA OR MINIMUM 10' OR AS PER PLANS. SEE PLANS FOR RIP RAP THICKNESS.
11. FENCE REMOVAL AND REPLACEMENT: AREAS SHOWN ON THE PLANS REQUIRING FENCE REMOVAL SHALL BE PERFORMED BY THE CONTRACTOR ONLY TO THE EXTENT REQUIRED FOR SAFE CONSTRUCTION OF THE SEWER LINE. THE FENCE SHALL BE CAREFULLY REMOVED AND SAFELY STORED FOR REPLACEMENT AFTER CONSTRUCTION IS COMPLETE. THE CONTRACTOR WILL BE RESPONSIBLE FOR PROPER REALIGNMENT OF THE RESTORED FENCE LINE. ANY MISALIGNMENT OR DAMAGE TO THE RESTORED FENCE SHALL BE REPAIRED AT THE CONTRACTOR'S EXPENSE. THE CONTRACTOR SHALL BE RESPONSIBLE TO NOTE ANY DAMAGE TO THE FENCE PRIOR TO CONSTRUCTION WITH ADEQUATE PHOTOGRAPHS OR OTHER EVIDENCE AND SHALL IDENTIFY THE SAME TO THE ENGINEER PRIOR TO CONSTRUCTION.

FINAL DRAWINGS

- NOT RELEASED FOR CONSTRUCTION

WK DICKSON
community infrastructure consultants
616 COLONNADE DRIVE
CHARLOTTE, NC 28205
(t)704-334-5348
(f)704-334-0078
WWW.WKDICKSON.COM
NC LICENSE NO.F-0374

NORTH CAROLINA PROFESSIONAL SEAL 8802 ENGINEER CHARLES R. FRONEBERGER

PROFESSIONAL SEAL

REVISION RECORD

NO.	DATE	DESCRIPTION	BY
A	10/9/18	ISSUE FOR OWNER/NCDEQ REVIEW	CRF

PROJECT NAME: KILLIAN CREEK WWTP PHASE 3 UPGRADE

DRAWING TITLE: GENERAL NOTES

PROJ. MGR.:	CRF
DESIGN BY:	CRF
DRAWN BY:	NS/CH
PROJ. DATE:	SEPT. 2018

DRAWING NUMBER:

C.01 OF 168

WKD PROJ. NO.: 20170294.00.CL

COPYRIGHT © W.K. DICKSON & CO., INC., ALL RIGHTS RESERVED. REPRODUCTION OR USE OF THE CONTENTS OF THE DOCUMENT, ADDITIONS OR MODIFICATIONS TO THE DOCUMENT WITHOUT WRITTEN PERMISSION IS PROHIBITED. ONLY COPIES FROM THE ORIGINAL OF THIS DOCUMENT MARKED WITH AN ORIGINAL SIGNATURE AND SEAL SHALL BE CONSIDERED TO BE VALID. TRUE COPIES.

ARCHITECTURAL

Sheet Number	Sheet Title
3.A-A.1	APPENDIX B - BLOWER BUILDING #3
3.A-A.2	BLOWER BUILDING PHASE 3 BUILDING #3.A
4.A-A.1	APPENDIX B - SLUDGE PUMP BUILDING #4
4.A-A.2	SLUDGE PUMP BUILDING #4.A
5.A-A.1	APPENDIX B - SLUDGE DEWATERING BLDG. #5
5.A-A.2	SLUDGE DEWATERING BUILDING #5.A
7.A-A.1	APPENDIX B - ROTARY DRUM THICKENER BLDG. #7
7.A-A.2	ROTARY DRUM THICKENER BUILDING #7
8.A-A.2	CHEMICAL FEED BUILDING #8
~~9.A-A.1~~	~~APPENDIX B - EFFLUENT FILTER BUILDING #9~~
3 9.A-A.2	EFFLUENT FILTER BUILDING #9
10.A-A.1	SCHEDULES
10.A-A.2	DETAILS

STRUCTURAL

Sheet Number	Sheet Title
S.0.0	GENERAL NOTES
S.0.1	GENERAL NOTES
S.0.2	GENERAL NOTES
S.0.3	GENERAL NOTES & ABREVIATIONS
S.0.4	STATEMENT OF SPECIAL INSPECTIONS
S.1	HEADWORKS FOUNDATION PLAN
S.2	HEADWORKS SECTIONS
S.3	HEADWORKS SECTIONS
S.4	HEADWORKS SECTIONS
S.5	SBR SYSTEMS AND DIGESTER PLAN
S.6	SBR SYSTEMS AND DIGESTER SECTIONS
S.7	SBR SYSTEMS AND DIGESTER SECTIONS
S.8	SBR SYSTEMS AND DIGESTER SECTIONS
3.A-S.1	BLOWER BUILDING FOUNDATION PLAN & SECTIONS
4.A-S.1	SLUDGE PUMP BUILDING FOUNDATION PLAN & SECTIONS
4.A-S.2	SLUDGE PUMP BUILDING SECTIONS
5.A-S.1	SLUDGE DEWATERING BUILDING FOUNDATION PLAN & SECTIONS
5.A-S.2	SLUDGE DEWATERING BUILDING ROOF FRAMING PLAN
6-S.1	EFFLUENT UV BUILDING PLAN (Formerly Effluent Filter / UV Building)
6-S.2	EFFLUENT UV BUILDING PLAN (Formerly Effluent Filter / UV Building)
7.A-S.1	ROTARY DRUM THICKENER BUILDING FOUNDATION PLAN & SECTIONS
7.A-S.2	ROTARY DRUM THICKENER BUILDING ROOF FRAMING PLAN
9-S.1	EFFLUENT BUILDING PLAN & DETAILS
9-S.2	EFFLUENT BUILDING PLAN & DETAILS
S.10	GENERAL FOUNDATION DETAILS
S.11	GENERAL DETAILS
S.12	GENERAL DETAILS
S.13	GENERAL PRECAST CONCRETE SECTIONS
S.14	GENERAL MASONRY DETAILS

PLUMBING

Sheet Number	Sheet Title
P0.1	SPECIFICATIONS - PLUMBING
4-P.1	EXISTING SLUDGE PUMP BUILDING PLUMBING
4.A-P.1	SLUDGE PUMP BUILDING PLUMBING
5.A-P.1	SLUDGE DEWATERING BUILDING PLUMBING
6-P.1	EFFLUENT UV BUILDING PLUMBING
7-P.1	EXISTING ROTARY DRUM THICKENER BUILDING PLUMBING
7.A-P.1	ROTARY DRUM THICKENER BUILDING PLUMBING
8-P.1	CHEMICAL FEED BUILDING PLUMBING
9-P.1	EFFLUENT BUILDING PLUMBING

MECHANICAL

Sheet Number	Sheet Title
M0.1	SPECIFICATIONS HVAC
3.A-M.1	BLOWER BUILDING HVAC
4-M.1	EXISTING SLUDGE PUMP BUILDING HVAC
4.A-M.1	SLUDGE PUMP BUILDING HVAC
5.A-M.1	SLUDGE DEWATERING BUILDING HVAC
5.A-M.2	SLUDGE DEWATERING BUILDING HVAC SCHEDULES
6-M.1	EFFLUENT UV BUILDING HVAC
7.A-M.1	ROTARY DRUM THICKENER BUILDING HVAC
8-M.1	CHEMICAL FEED BUILDING HVAC
9-M.1	EFFLUENT FILTER BUILDING HVAC

ELECTRICAL

Sheet Number	Sheet Title
E0.1	SCHEDULES, DETAIL
E0.2	DETAILS
E0.3	DETAILS
E0.4	SCHEDULES
E0.5	SCHEDULES
E0.6	SCHEDULES
E0.7	DETAILS
E0.8	SITE PLAN - ELECTRICAL
E1.1	HEADWORKS ELECTRICAL
E2.1	SBR ELECTRICAL
E2.2	SBR ELECTRICAL
E2.3	SBR CONTROL AND INSTRUMENTATION
E2.4	POST EQUALIZATION TRANSFER PUMP SBR ELECTRICAL
E2.5	SBR DIGESTER ELECTRICAL
E2.6	SBR DIGESTER CONTROL AND INSTRUMENTATION
E2.7	SBR DIGESTER ELECTRICAL
E2.8	SBR FLOW SPLITTER ELECTRICAL
3-E.1	EXISTING BLOWER BUILDING ELECTRICAL
3.A-E.1	BLOWER BUILDING ELECTRICAL
3.A-E.2	BLOWER BUILDING CONTROL & INSTRUMENTATION SCHEDULE
4-E.1	EXISTING SLUDGE BUILDING ELECTRICAL
4.A-E.1	SLUDGE BUILDING ELECTRICAL
4.A-E.2	SLUDGE BUILDING INSTRUMENTATION & CONTROL PLAN
5.A-E.1	SLUDGE DEWATERING BUILDING POWER
5.A-E.2	SLUDGE DEWATERING BUILDING LIGHTING
5.A-E.3	SLUDGE DEWATERING BUILDING INSTRUMENTATION & CONTROL PLAN
~~5.A-E.4~~	~~SLUDGE DEWATERING BUILDING INSTRUMENTATION & CONTROL PLAN~~
3 5.A-E.5	SLUDGE DEWATERING BUILDING INSTRUMENTATION & CONTROL
6-E.1	EFFLUENT UV BUILDING ELECTRICAL
7.A-E.1	ROTARY DRUM THICKENER BUILDING ELECTRICAL
7-E.1	EXISTING ROTARY DRUM THICKENER BUILDING ELECTRICAL
8-E.1	CHEMICAL FEED BUILDING ELECTRICAL
9-E.1	EFFLUENT FILTER BUILDING POWER
9-E.2	EFFLUENT UV BUILDING LIGHTING
9-E.3	EFFLUENT FILTER BUILDING INSTRUMENTATION & CONTROL

CIVIL

Sheet Number	Sheet Title
C.0	COVER SHEET
C.01	GENERAL NOTES
C.02	SHEET INDEX
C.1	EXISTING CONDITIONS AND DEMOLITION PLAN
C.2	OVERALL SITE PLAN
C.3	SITE LAYOUT PLAN
C.4	SITE GRADING & DRAINAGE PLAN
C.5	GRADING AND DRAINAGE DETAIL PLAN
C.6	GRADING AND DRAINAGE DETAIL PLAN
C.7	STORM PROFILES
C.8	STORM PROFILES
C.9	YARD PIPING PLAN
C.10	PLANT SEWER PLAN AND PROFILE
C.11	PRE AND POST DRAINAGE AREA MAP
C.12	EROSION CONTROL PLAN - PHASE I
C.13	EROSION CONTROL PLAN - PHASE II
C.14	EROSION CONTROL NOTES
C.15	EROSION CONTROL DETAILS
C.16	EROSION CONTROL DETAILS
C.17	EROSION CONTROL DETAILS
C.18	MISCELLANEOUS DETAILS
C.19	MISCELLANEOUS DETAILS
C.20	UTILITY DETAILS
C.21	UTILITY DETAILS

GENERAL ARRANGEMENT & PROCESS

Sheet Number	Sheet Title
G.1	PROCESS BLOCK DIAGRAM
G.2	PROCESS FLOW DIAGRAM - HEADWORKS & SBR
G.3	PROCESS FLOW DIAGRAM - POST EQ & EFFLUENT FILTERS
G.4	PROCESS FLOW DIAGRAM - UV DISINFECTION REAERATION PLANT PS
G.5	PROCESS FLOW DIAGRAM - CAUSTIC & ALUM CHEMICAL FEED SYSTEMS
G.6	PROCESS FLOW DIAGRAM - AEROBIC DIGESTERS & SLUDGE PUMP STA
G.7	PROCESS FLOW DIAGRAM - SLUDGE DEWATERING
G.8	PROCESS FLOW DIAGRAM - SLUDGE THICKENERS
G.9	HYDRAULIC PROFILE
G.10	EXISTING HEADWORKS MODIFICATIONS
G.11	PROPOSED HEADWORKS PLAN & SECTIONS
G.12	PROPOSED HEADWORKS SECTIONS & DETAILS SHEET 1
G.13	PROPOSED HEADWORKS, SECTIONS & DETAILS SHEET 2
G.14	SBR INFLUENT FLOW SPLITTER PLAN, SECTION & DETAILS
G.15	EXISTING DIGESTER MODIFICATION PLAN
G.16	EXISTING SBR SYSTEM MODIFICATIONS PLAN
G.17	EXISTING SBR & DIGESTER SECTIONS
G.18	PROPOSED DIGESTER & SLUDGE HOLDING BASIN PLAN
G.19	PROPOSED SBR NO. 3 & 4 POST EQ PLAN
G.20	SBR & DIGESTER SECTIONS & DETAILS SHEET 1
G.21	SBR & DIGESTER SECTIONS & DETAILS SHEET 2
G.22	SBR & DIGESTER SECTIONS & DETAILS SHEET 3
G.23	SBR & DIGESTER SECTIONS & DETAILS SHEET 4
G.24	SBR & DIGESTER SECTIONS & DETAILS SHEET 5
G.25	SBR & DIGESTER SECTIONS & DETAILS SHEET 6
G.26	EXISTING RDT BUILDING PLAN
G.27	PROPOSED RDT BUILDING PLAN & SECTIONS
G.28	PROPOSED RDT BUILDING SECTIONS
G.29	PROPOSED RDT BUILDING DETAILS
G.30	PROPOSED RDT PUMP STATION SECTIONS & DETAILS
G.31	EXISTING BLOWER BUILDING MODIFICATIONS
G.32	PROPOSED BLOWER BUILDING #3A
G.33	EFFLUENT FILTER BUILDING PLAN
G.34	EFFLUENT FILTER BUILDING SECTIONS
G.35	EFFLUENT FILTER BUILDING SECTIONS
G.36	EFFLUENT FILTER UV BUILDING DEMOLITION PLAN SHEET 1 OF 2
G.37	EFFLUENT FILTER UV BUILDING DEMOLITION PLAN SHEET 2 OF 2
G.38	EXISTING UV BUILDING PLAN
G.39	EXISTING UV BUILDING SECTIONS & DETAILS
G.40	EXISTING SLUDGE PUMP STATION BUILDING #4 PLAN
G.41	SLUDGE PUMPING STATION BUILDING #4A, PLAN AND SECTIONS
G.42	SLUDGE DEWATERING BUILDING #5A PLAN
G.43	SLUDGE DEWATERING BUILDING #5A SECTIONS
G.44	SLUDGE DEWATERING BUILDING #5A SECTIONS
G.45	GENERAL DETAILS
G.46	HANDRAIL DETAIL PLAN - 1
G.47	HANDRAIL DETAIL PLAN - 2
G.48	HANDRAIL DETAIL PLAN - 3
G.49	UTILITY DETAILS
G.50	VALVE SCHEDULE DETAIL

WK DICKSON
community infrastructure consultants
616 COLONNADE DRIVE
CHARLOTTE, NC 28205
(t)704-334-5348
(f)704-334-0078
WWW.WKDICKSON.COM
NC LICENSE NO.F-0374

NORTH CAROLINA PROFESSIONAL ENGINEER SEAL 18602 CHARLES R. FRONEBERGER
PROFESSIONAL SEAL

REVISION RECORD

NO.	DATE	DESCRIPTION	BY
1	10/9/18	ISSUE FOR OWNER/NCDEQ REVIEW	CRF
2	5/21/19	REVISED DRAWING TITLES	WBK
3	9/16/19	REVISED ELECTRICAL SHEET TITLE	RWH

PROJECT NAME: KILLIAN CREEK WWTP PHASE 3 UPGRADE

DRAWING TITLE: SHEET INDEX

FINAL DRAWINGS - NOT RELEASED FOR CONSTRUCTION

PROJ. MGR.:	CRF
DESIGN BY:	CRF
DRAWN BY:	NS/CH
PROJ. DATE:	SEPT. 2018

DRAWING NUMBER:
C.02 OF 168

WKD PROJ. NO.:
20170294.00.CL

COPYRIGHT © 2018 WK DICKSON & CO., INC., ALL RIGHTS RESERVED. REPRODUCTION OR USE OF THE CONTENTS OF THIS DOCUMENT, ADDITIONS OR ALTERATIONS TO THE CONTENTS OF THIS DOCUMENT, OR ANY PORTION THEREOF, WITHOUT WRITTEN CONSENT IS PROHIBITED. COPIES MADE FROM THE ORIGINAL OF THIS DOCUMENT, MARKED WITH AN ORIGINAL SIGNATURE AND SEAL SHALL BE CONSIDERED TO BE VALID, TRUE COPIES.

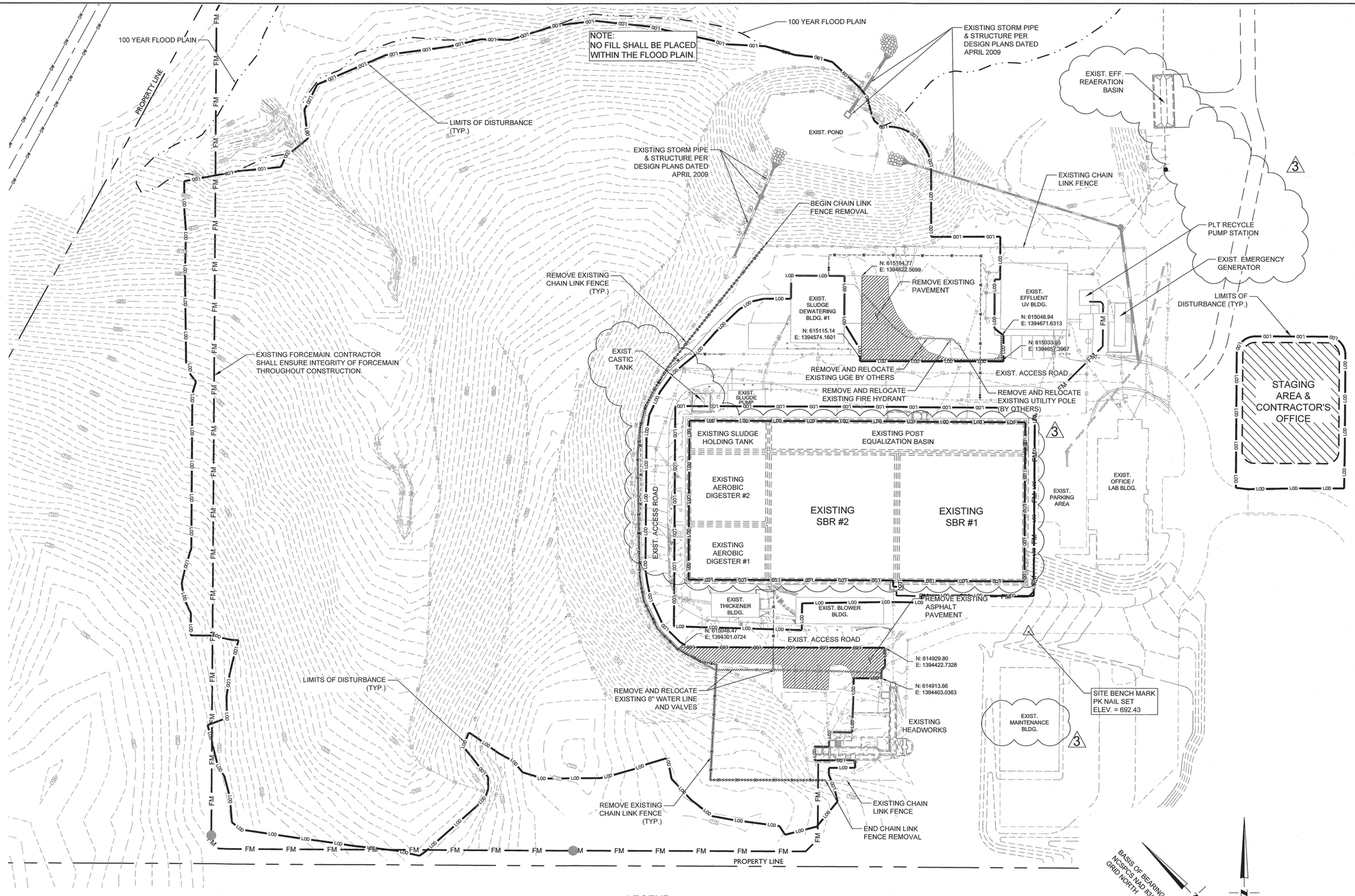

NOTE:
ELEVATIONS FOR THE KILLIAN CREEK PHASE 3 UPGRADE ARE BASED ON THE NAVD88 DATUM.

ELEVATIONS UTILIZED IN 2009 AND 2015 PLANT CONSTRUCTION WERE BASED UPON NGVD29. ELEVATIONS OF EXISTING STRUCTURES AND PIPING HAVE BEEN ADJUSTED TO REFLECT THE NAVD88 DATUM.

LEGEND

- EXISTING PAVEMENT TO BE REMOVED
- EXISTING CHAIN LINK FENCE TO BE REMOVED
- REMOVE AND RELOCATE EXISTING UGE BY OTHERS
- REMOVE AND RELOCATE EXISTING WATER LINE
- LOD — LIMITS OF DISTURBANCE
- 700 — EXISTING CONTOUR
- 100 YEAR FLOOD PLAIN
- PROPERTY LINE
- TB — EXISTING TOP OF BANK
- BB — EXISTING BOTTOM OF BANK
- SS — EXISTING SANITARY SEWER
- W — EXISTING WATER LINE
- UE — EXISTING UNDERGROUND ELECTRICAL

GRAPHIC SCALE
40 0 20 40 80 160
(IN FEET)
1 inch = 40 ft.

WK DICKSON
community infrastructure consultants
616 COLONNADE DRIVE
CHARLOTTE, NC 28205
(t)704-334-5348
(f)704-334-0078
WWW.WKDICKSON.COM
NC LICENSE NO.F-0374

NORTH CAROLINA PROFESSIONAL ENGINEER 8802 CHARLES B. FRONEBERGER

PROFESSIONAL SEAL

REVISION RECORD

NO.	DATE	DESCRIPTION	BY
1	10/9/18	ISSUE FOR OWNER/NCDEQ REVIEW	CRF
2	01/30/19	REVISIONS PER NCDEQ EC COMMENTS	CRF
3	9/17/19	REVISED AND ADD EXISTING BUILDING NAMES	RWH

- NOT RELEASED FOR CONSTRUCTION

FINAL DRAWINGS

PROJECT NAME: KILLIAN CREEK WWTP PHASE 3 UPGRADE

DRAWING TITLE: EXISTING CONDITIONS AND DEMOLITION PLAN

PROJ. MGR.:	CRF
DESIGN BY:	CRF
DRAWN BY:	NS/CH
PROJ. DATE:	SEPT. 2018

DRAWING NUMBER:
C.1 OF 168

WKD PROJ. NO.:
20170294.00.CL

COPYRIGHT © WK DICKSON & CO., INC. ALL RIGHTS RESERVED. REPRODUCTION OR USE OF THE CONTENTS OF THIS DOCUMENT, ADDITIONS OR MODIFICATIONS TO THE CONTENTS OF THIS DOCUMENT WITHOUT WRITTEN CONSENT OF WK DICKSON IS PROHIBITED. ONLY COPIES FROM THE ORIGINAL OF THIS DOCUMENT MARKED WITH AN ORIGINAL SIGNATURE AND SEAL SHALL BE CONSIDERED TO BE VALID, TRUE COPIES.

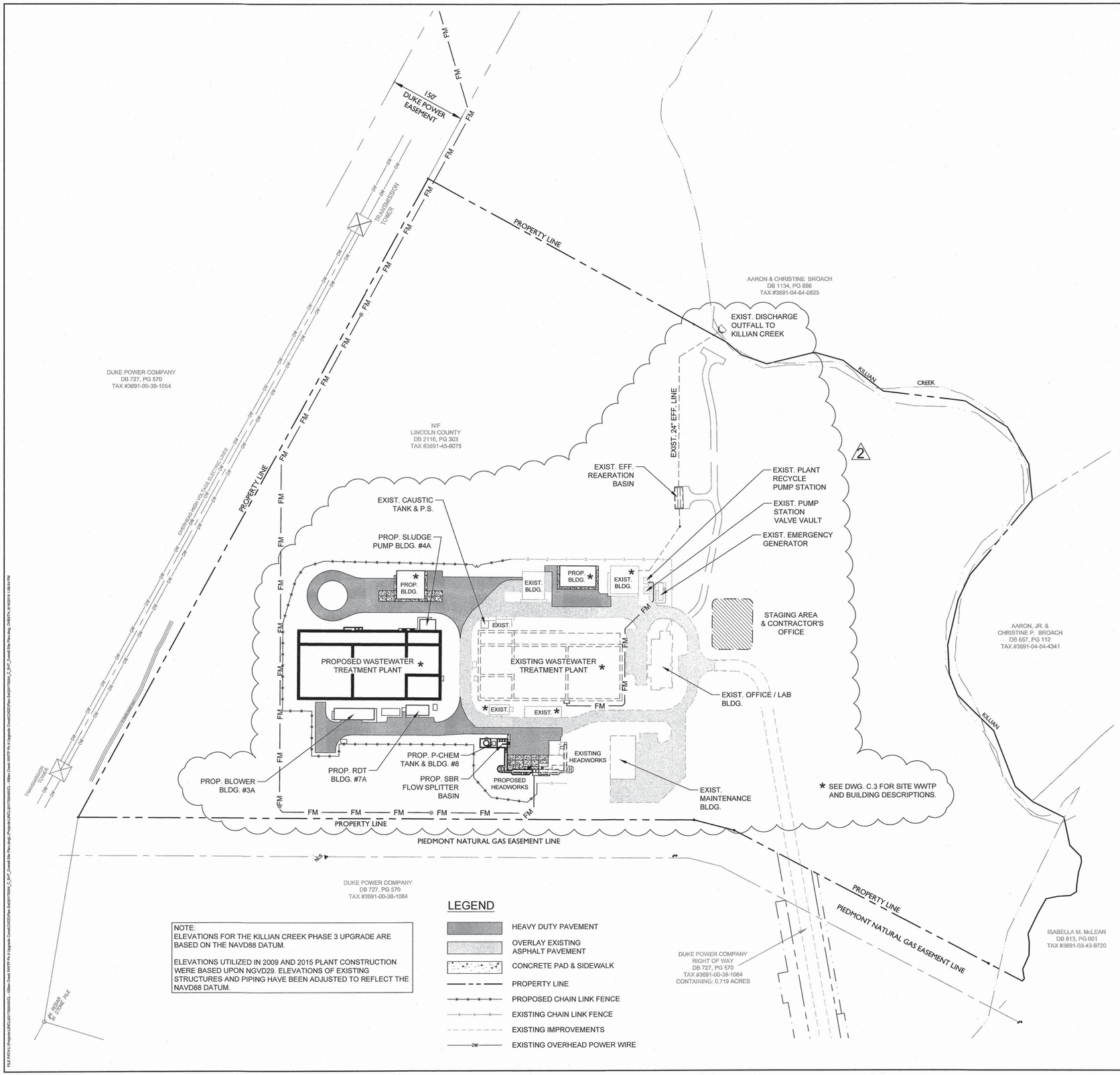

NOTE:
ELEVATIONS FOR THE KILLIAN CREEK PHASE 3 UPGRADE ARE BASED ON THE NAVD88 DATUM.

ELEVATIONS UTILIZED IN 2009 AND 2015 PLANT CONSTRUCTION WERE BASED UPON NGVD29. ELEVATIONS OF EXISTING STRUCTURES AND PIPING HAVE BEEN ADJUSTED TO REFLECT THE NAVD88 DATUM.

LEGEND

- HEAVY DUTY PAVEMENT
- OVERLAY EXISTING ASPHALT PAVEMENT
- CONCRETE PAD & SIDEWALK
- PROPERTY LINE
- PROPOSED CHAIN LINK FENCE
- EXISTING CHAIN LINK FENCE
- EXISTING IMPROVEMENTS
- EXISTING OVERHEAD POWER WIRE

GENERAL NOTES:

1. BOUNDARY AND SURVEY INFORMATION TAKEN FROM A SURVEY PREPARED BY WK DICKSON, DATED NOVEMBER 2006. REFER TO EXISTING CONDITIONS PLAN FOR INFORMATION REGARDING SURVEY.

2. ALL IMPROVEMENTS AND CONSTRUCTION SHALL BE IN ACCORDANCE WITH STATE AND LOCAL STANDARDS AND SPECIFICATIONS OR NC BUILDING CODE AS APPLICABLE.

3. CONTRACTOR SHALL FIELD INSPECT AND VERIFY ALL EXISTING UTILITY SERVICES PRIOR TO CONSTRUCTION. NO SERVICES SHALL BE ABANDONED OR INTERRUPTED UNLESS CALLED FOR ON THE APPROVED CONSTRUCTION DOCUMENTS. ANY DISCREPANCIES FOUND IN THE FIELD WITH THE APPROVED SET OF PLANS SHALL BE CALLED TO THE ATTENTION OF THE ENGINEER AND OWNER PRIOR TO PROCEEDING WITH CONSTRUCTION.

4. THE CONTRACTOR IS CAUTIONED THAT THE LOCATION AND/OR ELEVATION OF EXISTING UTILITIES AS SHOWN ON THESE PLANS ARE BASED ON RECORDS OF THE VARIOUS UTILITY COMPANIES, PREVIOUS DESIGN DOCUMENTS, AND WHERE POSSIBLE, MEASUREMENTS TAKEN IN THE FIELD. THE INFORMATION IS NOT TO BE RELIED ON AS BEING EXACT OR COMPLETE. THE LOCATION OF EXISTING UTILITIES MUST BE VERIFIED IN THE FIELD BY THE CONTRACTOR PRIOR TO CONSTRUCTION. ANY WORK ASSOCIATED WITH SAID UTILITIES TO BE COORDINATED WITH APPROPRIATE UTILITY COMPANY.

5. THE CONTRACTOR SHALL IMMEDIATELY REPORT TO THE OWNER AND ENGINEER ANY DISCREPANCIES FOUND BETWEEN ACTUAL FIELD CONDITIONS AND CONSTRUCTION DOCUMENTS AND SHALL WAIT FOR INSTRUCTIONS PRIOR TO PROCEEDING.

6. PRIOR TO BEGINNING CONSTRUCTION THE CONTRACTOR IS RESPONSIBLE TO VERIFY THAT ALL REQUIRED PERMITS AND APPROVALS HAVE BEEN OBTAINED FROM ALL REGULATORY AUTHORITIES AND SHALL BE THOROUGHLY FAMILIAR WITH CONDITIONS OF SAID PERMITS AND INSPECTION REQUIREMENTS.

7. THE GENERAL CONTRACTOR SHALL CONTACT ALL OWNERS OF EASEMENTS, UTILITIES AND RIGHT-OF-WAYS, PUBLIC OR PRIVATE, PRIOR TO WORKING IN THESE AREAS.

8. THE CONTRACTOR SHALL BE RESPONSIBLE FOR DAMAGE TO ANY EXISTING ITEM AND/OR MATERIAL INSIDE OR OUTSIDE THE CONSTRUCTION LIMITS.

9. CONTRACTOR SHALL VERIFY THEIR SCOPE OF WORK PRIOR TO CONSTRUCTION.

10. ALL DIMENSIONS ARE TO FACE OF CURB, EDGE OF PAVEMENT, OR FACE OF BUILDING UNLESS OTHERWISE NOTED.

11. SIGHT TRIANGLES SHOWN ARE THE MINIMUM REQUIRED.

12. REFER TO ARCHITECTURAL PLANS FOR ACTUAL BUILDING DIMENSIONS.

13. FOR EXTERIOR LIGHTING, REFER TO ELECTRICAL PLANS.

14. CONTRACTOR SHALL FURNISH AND INSTALL ALL PAVEMENT MARKINGS AS SHOWN ON THE PLANS. ALL SIGNS, PAVEMENT MARKINGS, AND OTHER TRAFFIC CONTROL DEVICES SHALL CONFORM TO THE LATEST EDITION OF THE MANUAL ON UNIFORM TRAFFIC CONTROL DEVICES.

15. ALL PAVEMENT MARKINGS SHALL BE FOUR (4) INCH WHITE LINES UNLESS INDICATED OTHERWISE ON THE PLANS.

16. ANY CONSTRUCTION OR USE WITHIN THE AREAS DELINEATED AS 0.1' FLOODWAY ENCROACHMENT AREA IS SUBJECT TO THE RESTRICTIONS IMPOSED BY THE FLOODWAY.

17. PRIOR TO PLAT RECORDATION, OFFSITE RIGHT OF WAY AND/OR CONSTRUCTION EASEMENTS ARE REQUIRED TO BE OBTAINED ACCORDING TO THE GUIDELINES OF THE "OFFSITE RIGHT OF WAY ACQUISITION PROCESS". THESE NEEDED RIGHT OF WAY AND CONSTRUCTION LIMITS ARE CLEARLY SHOWN ON THE ROADWAY IMPROVEMENT PLAN.

18. CONTRACTOR SHALL MAINTAIN THE SITE IN A MANNER SO THAT WORKMEN AND PUBLIC ARE PROTECTED FROM INJURY.

19. DO NOT SCALE DRAWINGS FOR ACTUAL DIMENSIONS AS IT IS A REPRODUCTION AND SUBJECT TO DISTORTION.

20. LABOR SAFETY REGULATIONS SHALL CONFORM TO THE PROVISIONS SET FORTH BY THE OCCUPATIONAL SAFETY AND HEALTH ADMINISTRATION (OSHA) IN THE FEDERAL REGISTER OF THE DEPARTMENT OF TRANSPORTATION

21. CONTRACTOR SHALL MAKE HIMSELF THOROUGHLY FAMILIAR WITH THE GEOTECHNICAL REPORT AS PROVIDED FOR THE PROJECT BY PROJECT GEOTECHNICAL ENGINEER AND ADHERE TO ALL DIRECTION AND RECOMMENDATIONS THEREIN. ANY DISCREPANCIES BETWEEN GEOTECHNICAL REPORT AND CONSTRUCTION DOCUMENTS SHALL BE CALLED TO THE ATTENTION OF THE OWNER AND ENGINEER BEFORE PROCEEDING.

22. ALL SUBSURFACE CONSTRUCTION SHALL COMPLY WITH THE "TRENCH SAFETY ACT." THE CONTRACTOR SHALL INSURE THAT THE METHOD OF TRENCH PROTECTION AND CONSTRUCTION IS IN COMPLIANCE WITH OSHA REGULATIONS.

23. IT SHALL BE THE SOLE RESPONSIBILITY OF THE CONTRACTOR TO COMPLY AND ENFORCE ALL APPLICABLE SAFETY REGULATIONS. INFORMATION PROVIDED HEREIN HAS BEEN PROVIDED FOR THE CONTRACTOR'S INFORMATION ONLY AND DOES NOT IMPLY THAT THE OWNER OR ENGINEER WILL INSPECT AND/OR ENFORCE SAFETY REGULATIONS.

24. WK DICKSON SHALL NOT BE IN CONTROL OR CHARGE OF, AND SHALL NOT BE RESPONSIBLE FOR ACTUAL CONSTRUCTION MEANS, METHODS, TECHNIQUES, PROCEDURES, OR SAFETY PRECAUTIONS IN CONNECTION WITH THE WORK, OR FOR THE ACTS OR OMISSIONS OF CONTRACTORS OR ANY OTHER PERSONS NOT UNDER THE EMPLOYMENT OF WK DICKSON.

25. WORK PERFORMED UNDER THIS CONTRACT SHALL INTERFACE SMOOTHLY WITH ANY OTHER WORK BEING PERFORMED BY OTHER CONTRACTOR/SUBCONTRACTORS AND UTILITY COMPANIES. IT WILL BE NECESSARY FOR THE GENERAL CONTRACTOR TO COORDINATE AND SCHEDULE HIS/HER ACTIVITIES ACCORDINGLY.

26. ALL CONSTRUCTION DEBRIS AND OTHER WASTE MATERIAL SHALL BE DISPOSED OF OFF-SITE BY THI CONTRACTOR IN ACCORDANCE WITH APPLICABLE REGULATORY AGENCY REQUIREMENTS.

27. CONTRACTOR SHALL RESTORE ALL DISTURBED AREAS TO EXISTING CONDITIONS OR BETTER TO INCLUDE FINAL GRADING, SEEDING, SILT FENCE REMOVAL WHEN VEGETATION IS ESTABLISHED.

29. REFER TO SHEETS C.4, C.5, AND C.6 FOR GRADING AND DRAINAGE.

FINAL DRAWINGS

NOT RELEASED FOR CONSTRUCTION

WK DICKSON
community infrastructure consultants
616 COLONNADE DRIVE
CHARLOTTE, NC 28205
(t)704-334-5348
(f)704-334-0078
WWW.WKDICKSON.COM
NC LICENSE NO.F-0374

NORTH CAROLINA PROFESSIONAL ENGINEER SEAL 8802 CHARLES P. FRONEBERGER

PROFESSIONAL SEAL

REVISION RECORD

NO.	DATE	DESCRIPTION	BY
1	10/9/18	ISSUE FOR OWNER/NCDEQ REVIEW	CRF
2	9/17/19	REVISED AND ADD EXISTING AND PROPOSED BUILDING NAMES	RWH

PROJECT NAME: KILLIAN CREEK WWTP PHASE 3 UPGRADE

DRAWING TITLE: OVERALL SITE PLAN

PROJ. MGR.:	CRF
DESIGN BY:	CRF
DRAWN BY:	NS/CH
PROJ. DATE:	SEPT. 2018

DRAWING NUMBER:

C.2 OF 168

WKD PROJ. NO.: 20170294.00.CL

COPYRIGHT © W.K. DICKSON & CO., INC., ALL RIGHTS RESERVED. REPRODUCTION OR USE OF THE CONTENTS OF THIS DOCUMENT, AUDITIONS OR OTHERWISE, WITHOUT THE EXPRESS WRITTEN CONSENT OF W.K. DICKSON & CO., INC., IS PROHIBITED. ELECTRONIC FILES OBTAINED FROM THE ORIGINAL OF THIS DOCUMENT, MARKED WITH AN ORIGINAL SIGNATURE AND SEAL SHALL BE CONSIDERED TO BE VALID, TRUE COPIES.

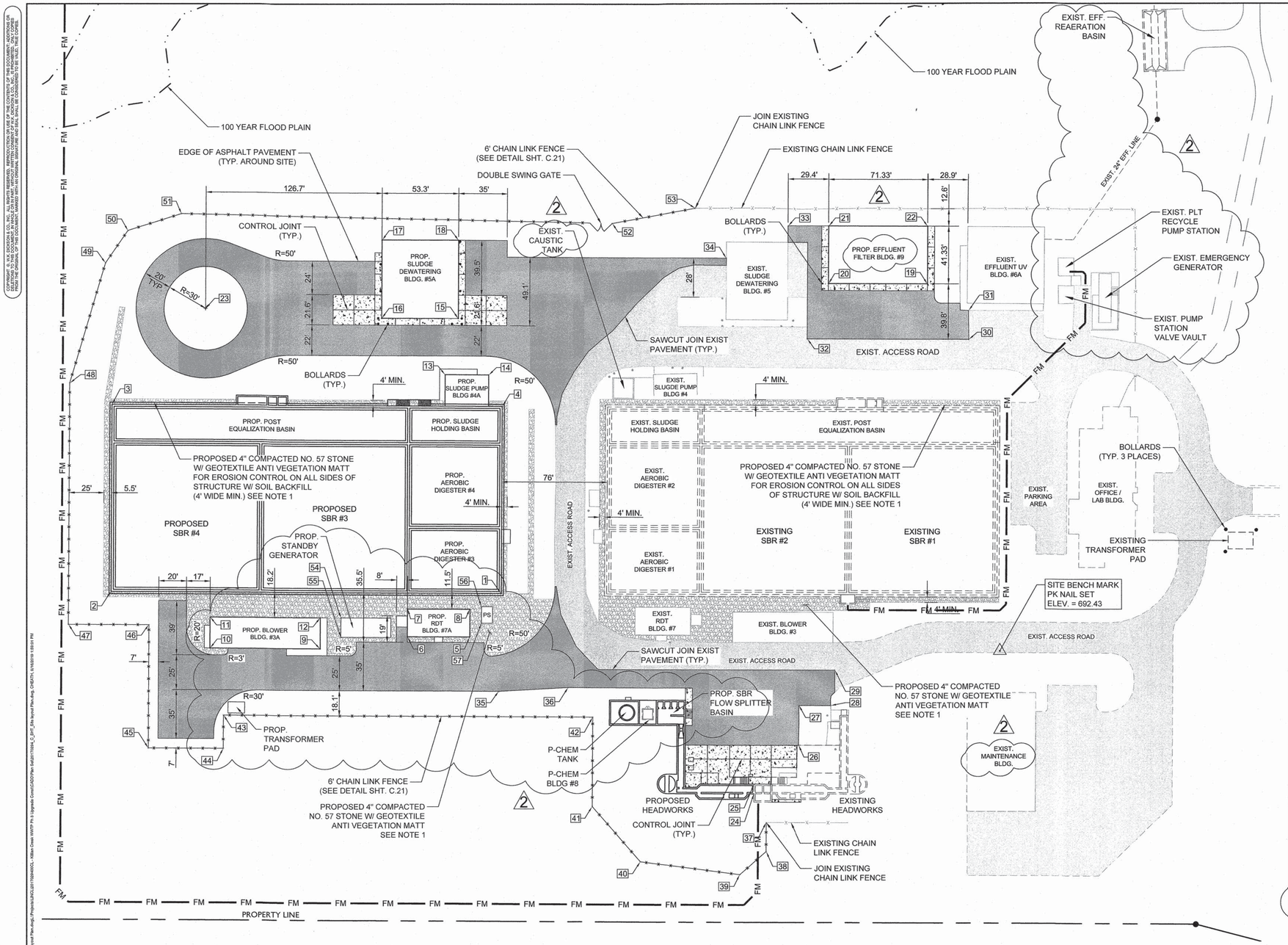

CONTROL POINTS TABLE			
POINT NUMBER	DESCRIPTION	NORTHING	EASTING
1	SBR BLDG. CORNER	615136.82	1394288.56
2	SBR BLDG. CORNER	615333.03	1394087.41
3	SBR BLDG. CORNER	615429.31	1394181.32
4	SBR BLDG. CORNER	615233.10	1394382.47
5	RDT BLDG. CORNER	615129.94	1394250.42
6	RDT BLDG. CORNER	615161.36	1394218.21
7	RDT BLDG. CORNER	615175.68	1394232.17
8	RDT BLDG. CORNER	615144.26	1394264.38
9	BLOWER BLDG. CORNER	615198.81	1394166.95
10	BLOWER BLDG. CORNER	615254.21	1394110.15
11	BLOWER BLDG. CORNER	615270.19	1394125.75
12	BLOWER BLDG. CORNER	615214.80	1394182.54
13	SLUDGE PUMP BLDG. CORNER	615278.07	1394368.83
14	SLUDGE PUMP BLDG. CORNER	615256.20	1394391.26
15	SLUDGE DEWATERING BLDG. CORNER	615300.58	1394403.69
16	SLUDGE DEWATERING BLDG. CORNER	615339.22	1394364.07
17	SLUDGE DEWATERING BLDG. CORNER	615379.36	1394403.23
18	SLUDGE DEWATERING BLDG. CORNER	615340.73	1394442.84
19	EFFLUENT FILTER BLDG. CORNER	615083.31	1394663.72
20	EFFLUENT FILTER BLDG. CORNER	615133.13	1394612.66
21	EFFLUENT FILTER BLDG. CORNER	615162.72	1394641.52
22	EFFLUENT FILTER BLDG. CORNER	615112.91	1394692.59
23	TURNAROUND RADIUS POINT	615432.07	1394277.63
24	HEADWORKS BLDG. CORNER	614906.65	1394319.28
25	HEADWORKS BLDG. CORNER	614911.66	1394324.17
26	CORNER PAVEMENT LIMITS	614909.36	1394366.63
27	CORNER PAVEMENT LIMITS	614929.65	1394386.63
28	CORNER PAVEMENT LIMITS	614913.66	1394403.04
29	CORNER PAVEMENT LIMITS	614929.80	1394422.73
30	CORNER PAVEMENT LIMITS	615033.95	1394657.40
31	CORNER PAVEMENT LIMITS	615048.94	1394671.63
32	CORNER PAVEMENT LIMITS	615115.14	1394574.16
33	CORNER PAVEMENT LIMITS	615183.23	1394620.50
34	CORNER PAVEMENT LIMITS	615197.48	1394572.52
35	CORNER PAVEMENT LIMITS	615087.37	1394238.23
36	CORNER PAVEMENT LIMITS	615054.60	1394276.11
37	CORNER CHAIN LINK FENCE - JOIN EX.	614885.59	1394311.26
38	CORNER CHAIN LINK FENCE	614870.56	1394296.60
39	CORNER CHAIN LINK FENCE	614871.85	1394271.52
40	CORNER CHAIN LINK FENCE	614928.33	1394226.67
41	CORNER CHAIN LINK FENCE	614981.00	1394229.35
42	CORNER CHAIN LINK FENCE	615026.99	1394274.22
43	CORNER CHAIN LINK FENCE	615212.72	1394083.70
44	CORNER CHAIN LINK FENCE	615195.66	1394067.05
45	CORNER CHAIN LINK FENCE	615233.37	1394028.40
46	CORNER CHAIN LINK FENCE	615296.75	1394090.23
47	CORNER CHAIN LINK FENCE	615337.28	1394048.73
48	CORNER CHAIN LINK FENCE	615461.53	1394170.08
49	CORNER CHAIN LINK FENCE	615505.59	1394248.44
50	CORNER CHAIN LINK FENCE	615511.09	1394276.26
51	CORNER CHAIN LINK FENCE	615492.99	1394312.52
52	CORNER CHAIN LINK FENCE	615272.57	1394530.78
53	CORNER CHAIN LINK FENCE - JOIN EX.	615238.89	1394581.32
54	CORNER STANDBY GENERATOR	615204.46	1394193.14
55	CORNER STANDBY GENERATOR	615194.44	1394183.36
56	CORNER RDT PUMP STATION	615139.87	1394271.74
57	CORNER RDT PUMP STATION	615131.28	1394263.36

NOTE:

1. CONTRACTOR SHALL PROVIDE AND INSTALL A HONEYCONE GEOCELL OF NON-WOVEN POLYEHTYLENE/POLYPROPHYLENE GEOTEXTILE MATERIAL IN DESIGNATED AREAS. THE GEOCELL SHALL HAVE A MINIMUM DEPTH OF 4-INCHES AND SHALL BE FILLED WITH 3/4-INCH STONE WITH A GEOTEXTILE NON-WOVEN FILTER FABRIC MATERIAL INSTALLED UNDER THE GEOCELLS FOR VEGETATION CONTROL. INSTALL THE FILTER FABRIC AND GEOCELLS PER MANUFACTURER RECOMMENDATIONS. APPROVED MANUFACTURERS ARE DUPONT, TYPAR, TERRAM OR EQUAL.

LEGEND

- HEAVY DUTY PAVEMENT
- OVERLAY EXISTING ASPHALT PAVEMENT
- CONCRETE PAD & SIDEWALK
- 4" COMPACTED NO. 57 STONE
- 100 YEAR FLOOD PLAIN
- PROPERTY LINE
- PROPOSED CHAIN LINK FENCE
- EXISTING CHAIN LINK FENCE

NOTE:
ELEVATIONS FOR THE KILLIAN CREEK PHASE 3 UPGRADE ARE BASED ON THE NAVD88 DATUM.

ELEVATIONS UTILIZED IN 2009 AND 2015 PLANT CONSTRUCTION WERE BASED UPON NGVD29. ELEVATIONS OF EXISTING STRUCTURES AND PIPING HAVE BEEN ADJUSTED TO REFLECT THE NAVD88 DATUM.

BASIS OF BEARING: NC3PCS NAD 83/96 HARN GRID NORTH

PLANT NORTH

GRAPHIC SCALE
40 0 20 40 80 160
(IN FEET)
1 inch = 40 ft.

WK DICKSON
community infrastructure consultants
616 COLONNADE DRIVE
CHARLOTTE, NC 28205
(t)704-334-5348
(f)704-334-0078
WWW.WKDICKSON.COM
NC LICENSE NO.F-0374

NORTH CAROLINA PROFESSIONAL SEAL 8802 ENGINEER CHARLES R. FROMENBERGER

PROFESSIONAL SEAL

REVISION RECORD

NO.	DATE	DESCRIPTION	BY
1	10/9/18	ISSUE FOR OWNER/NCDEQ REVIEW	CRF
2	9/17/19	REVISED BLDG. NAMES, ADD POINTS, TRANSFORMER AND GENERATOR PAD	RWH

- NOT RELEASED FOR CONSTRUCTION -

FINAL DRAWINGS -

PROJECT NAME: KILLIAN CREEK WWTP PHASE 3 UPGRADE

DRAWING TITLE: SITE LAYOUT PLAN

PROJ. MGR.:	CRF
DESIGN BY:	CRF
DRAWN BY:	NS/CH
PROJ. DATE:	SEPT. 2018

DRAWING NUMBER:

C.3 OF 168

WKD PROJ. NO.: 20170294.00.CL

COPYRIGHT © W.K. DICKSON & CO., INC., ALL RIGHTS RESERVED. REPRODUCTION OR USE OF THE CONTENTS OF THIS DOCUMENT, (EXCEPTING FOR INTERNAL USE BY THE OWNER FOR WHOM THIS DOCUMENT IS PREPARED) WITHOUT WRITTEN PERMISSION IS PROHIBITED. COPIES MADE FROM THE ORIGINAL OF THIS DOCUMENT MARKED WITH AN ORIGINAL SIGNATURE AND SEAL SHALL BE CONSIDERED TO BE VALID, TRUE COPIES.

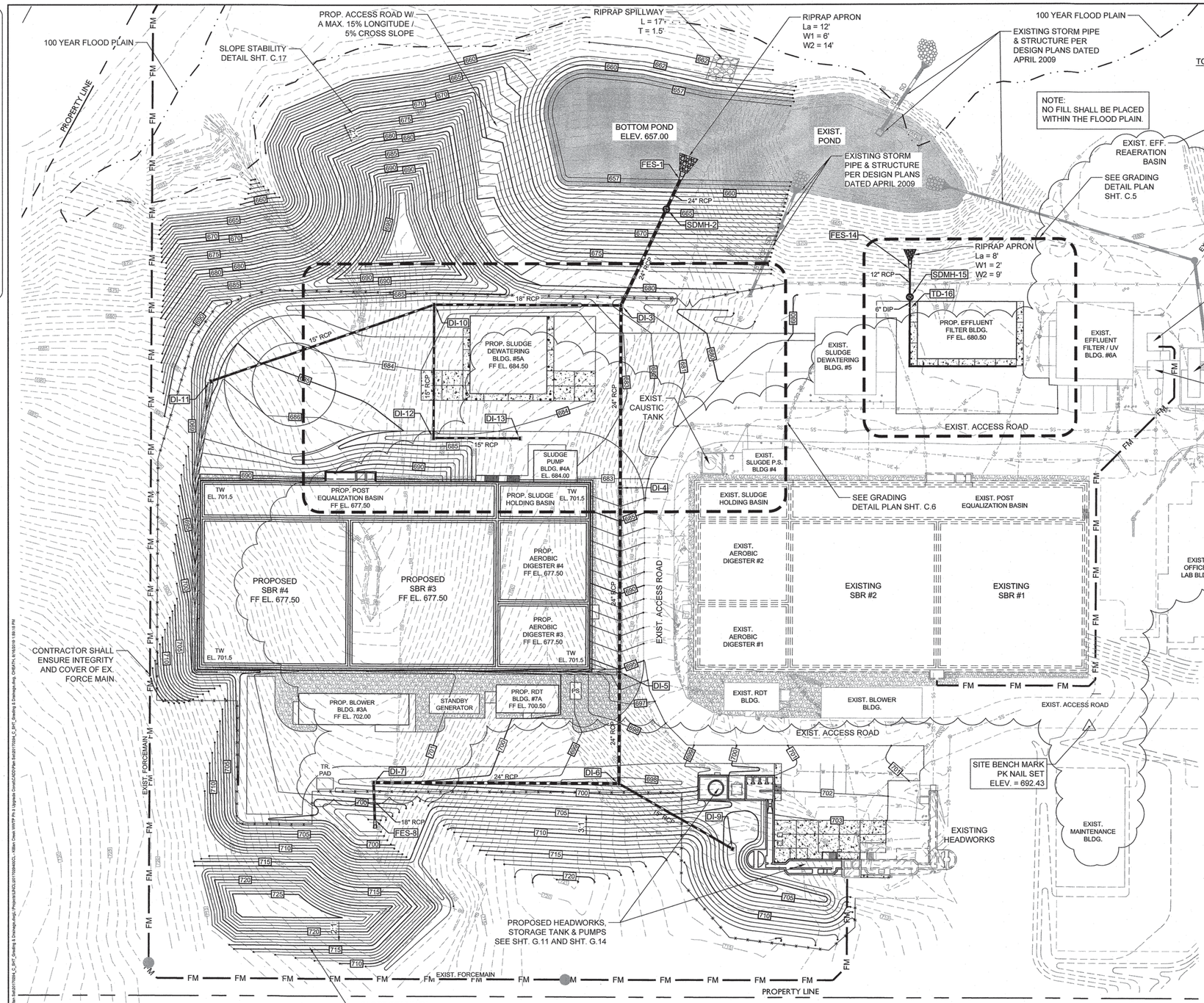

LEGEND

- CONCRETE PAD & SIDEWALK
- 100 YEAR FLOOD PLAIN
- PROPERTY LINE
- PROPOSED CHAIN LINK FENCE
- EXISTING CHAIN LINK FENCE
- 710 PROPOSED CONTOUR
- 700 EXISTING CONTOUR
- PROPOSED STORM PIPE

NOTE:
ELEVATIONS FOR THE KILLIAN CREEK PHASE 3 UPGRADE ARE BASED ON THE NAVD88 DATUM.

ELEVATIONS UTILIZED IN 2009 AND 2015 PLANT CONSTRUCTION WERE BASED UPON NGVD29. ELEVATIONS OF EXISTING STRUCTURES AND PIPING HAVE BEEN ADJUSTED TO REFLECT THE NAVD88 DATUM.

BASIS OF BEARING: NCSPCS NAD 83/95 HARN GRID NORTH

PLANT NORTH

GRAPHIC SCALE
40 0 20 40 80 160
(IN FEET)
1 inch = 40 ft.

GRADING AND DRAINAGE NOTES

1. REFER TO THE SITE PLAN FOR RELATED NOTES.
2. APPROVAL OF THIS PLAN IS NOT AN AUTHORIZATION TO GRADE ADJACENT PROPERTIES. WHEN FIELD CONDITIONS WARRANT OFF-SITE GRADING, PERMISSION MUST BE OBTAINED FROM THE AFFECTED OWNERS.
3. IN ORDER TO ENSURE PROPER DRAINAGE, KEEP A MINIMUM OF 0.5% SLOPE ON THE CURB WITHIN PRIVATE & PUBLIC STREETS.
4. ALL CONTOURS AND SPOT ELEVATIONS REFLECT FINISHED GRADES.
5. ALL ELEVATIONS ARE IN REFERENCE TO THE BENCHMARK. CONTRACTOR SHALL VERIFY THE BENCHMARK PRIOR TO GROUND BREAKING.
6. THE CONTRACTOR SHALL IMMEDIATELY REPORT TO OWNER ANY DISCREPANCIES FOUND BETWEEN ACTUAL FIELD CONDITIONS AND CONSTRUCTION DOCUMENTS AND SHALL WAIT FOR INSTRUCTION PRIOR TO PROCEEDING.
7. CONTRACTOR SHALL VERIFY LOCATION OF ALL EXISTING UTILITIES IN THE FIELD PRIOR TO BEGINNING CONSTRUCTION.
8. CONTRACTOR SHALL BLEND NEW EARTHWORK SMOOTHLY TO TRANSITION BACK TO EXISTING GRADE.
9. ALL FILL SHALL BE PLACED IN MAXIMUM 8-INCH LIFTS AND COMPACTED. ALL FILL WITHIN LIMITS OF BUILDING AND PAVEMENT AREAS SHALL BE COMPACTED TO 100% MODIFIED PROCTOR DENSITY WITHIN THE TOP 24 INCHES AND A MINIMUM 98% STD. PROCTOR DENSITY BELOW 24-INCH DEPTH. FILL WITHIN LANDSCAPED AREAS SHALL BE COMPACTED TO MINIMUM 90% MODIFIED PROCTOR (ASTM 1557) DENSITY. REFER TO GEOTECHNICAL ENGINEER'S REPORT FOR ADDITIONAL EARTHWORK SPECIFICATIONS AND REQUIREMENTS.
10. LIMITS OF CLEARING SHOWN ON GRADING PLAN ARE BASED UPON THE APPROXIMATE CUT AND FILL SLOPE LIMITS, OR OTHER GRADING REQUIREMENTS.
11. THE PROPOSED CONTOURS AND SPOT ELEVATIONS SHOWN WITHIN ROADWAYS, PARKING LOTS, AND SIDEWALK AREAS REFLECT FINISHED ELEVATIONS INCLUDING PAVEMENT. REFER TO PAVEMENT CROSS SECTION DATA TO ESTABLISH CORRECT SUBBASE OR AGGREGATE BASE COURSE ELEVATIONS TO BE COMPLETED UNDER THIS CONTRACT.
12. CONTRACTOR SHALL ENSURE POSITIVE DRAINAGE SUCH THAT RUNOFF WILL DRAIN BY GRAVITY FLOW ACROSS NEW PAVEMENT AREAS TO NEW OR EXISTING DRAINAGE INLETS, OR SHEET OVERLAND.
13. ROOF DRAIN PIPING SHALL BE PVC. PIPE SHALL HAVE A 1% SLOPE MINIMUM AND A MINIMUM 2' COVER UNLESS OTHERWISE INDICATED ON PLAN. REFER TO PLUMBING PLANS FOR ROOF DRAIN LOCATIONS.
14. REFER TO C.14 FOR NOTES & CONSTRUCTION SEQUENCE REQUIREMENTS.
15. ALL GRADED OR DISTURBED AREAS BEYOND THE LIMITS OF PAVING, SIDEWALKS, BUILDINGS, ETC., SHALL BE STABILIZED WITH A NEW LAWN SEEDED IN ACCORDANCE WITH THE SEEDING SPECIFICATION, SHEET C.14. CONTRACTOR SHALL MAINTAIN SEEDED AREAS UNTIL A HEALTHY STAND OF GRASS IS ESTABLISHED.

FINAL DRAWINGS - NOT RELEASED FOR CONSTRUCTION

WK DICKSON
community infrastructure consultants
616 COLONNADE DRIVE
CHARLOTTE, NC 28205
(t)704-334-5348
(f)704-334-0078
WWW.WKDICKSON.COM
NC LICENSE NO.F-0374

NORTH CAROLINA PROFESSIONAL ENGINEER SEAL 8802 CHARLES R. FRONHEFER

PROFESSIONAL SEAL

REVISION RECORD

NO.	DATE	DESCRIPTION	BY
1	10/9/18	ISSUE FOR OWNER/NCDEQ REVIEW	CRF
2	01/30/19	REVISIONS PER NCDEQ EC COMMENTS	CRF
3	9/17/19	REVISED BLDG. NAMES, TRANSFORMER AND GENERATOR PAD	RWH

PROJECT NAME: KILLIAN CREEK WWTP PHASE 3 UPGRADE

DRAWING TITLE: SITE GRADING & DRAINAGE PLAN

PROJ. MGR.:	CRF
DESIGN BY:	CRF
DRAWN BY:	NS/CH
PROJ. DATE:	SEPT. 2018

DRAWING NUMBER:

C.4 OF 168

WKD PROJ. NO.:

20170294.00.CL

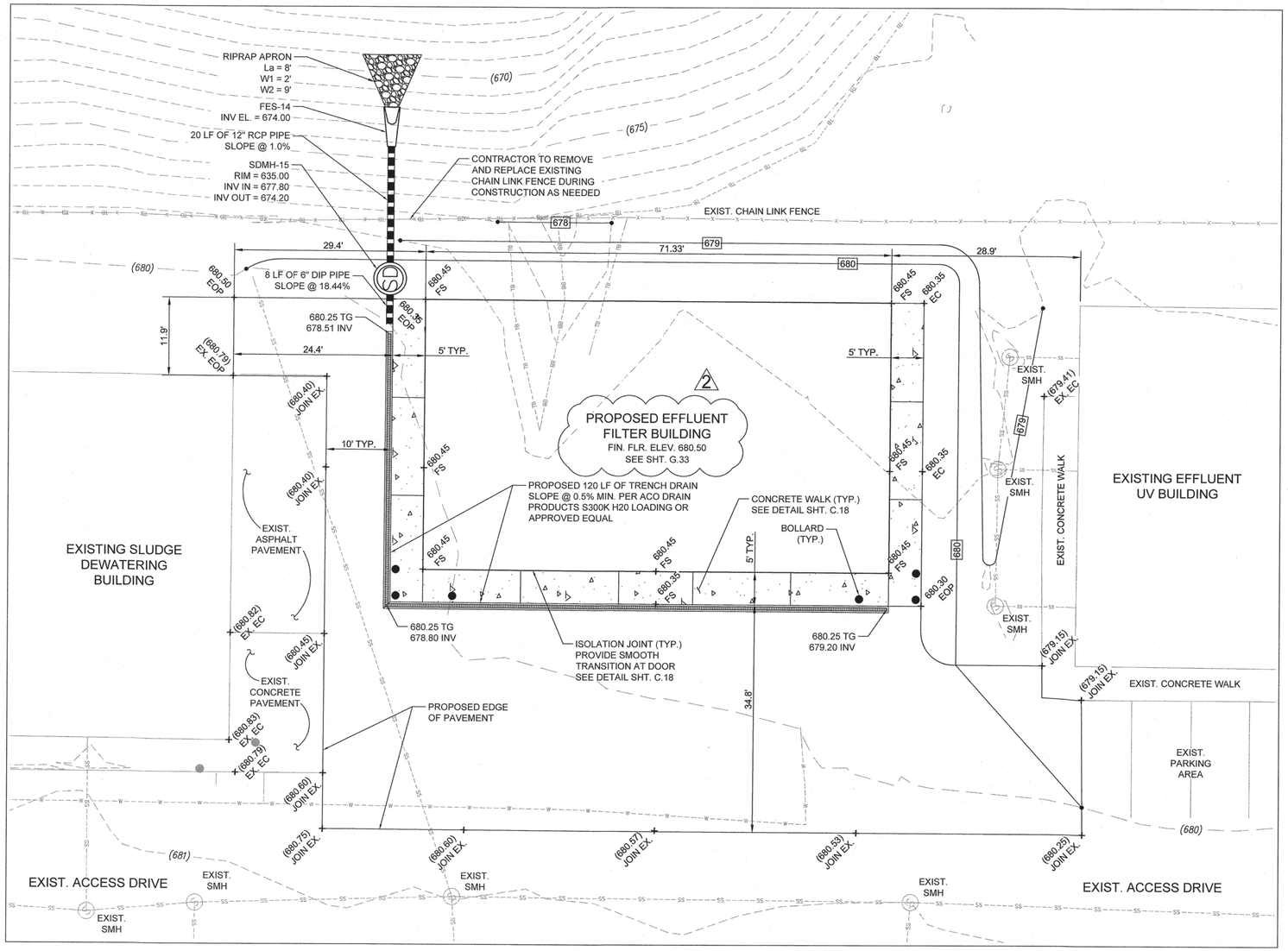

GRADING & DRAINAGE - DETAIL PLAN

SCALE: 1"=10'

LEGEND

- HEAVY DUTY PAVEMENT
- OVERLAY EXISTING ASPHALT PAVEMENT
- CONCRETE PAD & SIDEWALK
- 4" COMPACTED NO. 57 STONE
- 678 — PROPOSED CONTOUR
- (675) — EXISTING CONTOUR
- TB — EXISTING TOP OF BANK
- BB — EXISTING BOTTOM OF BANK
- SS — EXISTING SANITARY SEWER
- W — EXISTING WATER LINE
- UE — EXISTING UNDERGROUND ELECTRICAL
- EXISTING CHAIN LINK FENCE
- PROPOSED STORM PIPE
- PROPOSED CONCRETE BOLLARD
- EOP — EDGE OF PAVEMENT
- EC — EDGE OF CONCRETE
- FS — FINISHED SURFACE

NOTE:
ELEVATIONS FOR THE KILLIAN CREEK PHASE 3 UPGRADE ARE BASED ON THE NAVD88 DATUM.

ELEVATIONS UTILIZED IN 2009 AND 2015 PLANT CONSTRUCTION WERE BASED UPON NGVD29. ELEVATIONS OF EXISTING STRUCTURES AND PIPING HAVE BEEN ADJUSTED TO REFLECT THE NAVD88 DATUM.

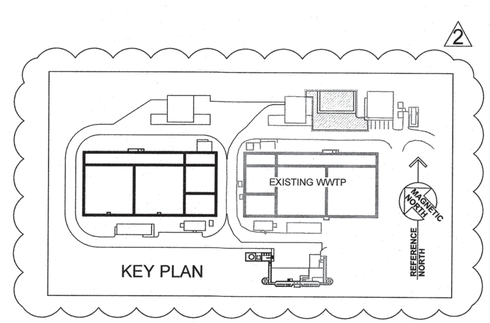

KEY PLAN

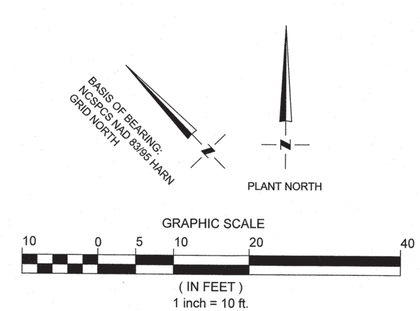

NOT RELEASED FOR CONSTRUCTION

FINAL DRAWINGS -

WK DICKSON
community infrastructure consultants
616 COLONNADE DRIVE
CHARLOTTE, NC 28205
(t)704-334-5348
(f)704-334-0078
WWW.WKDICKSON.COM
NC LICENSE NO.F-0374

NORTH CAROLINA PROFESSIONAL ENGINEER SEAL 8802 CHARLES R. FRONEBERGER
PROFESSIONAL SEAL

REVISION RECORD

NO.	DATE	DESCRIPTION	BY
1	10/9/18	ISSUE FOR OWNER/NCDEQ REVIEW	CRF
2	9/17/19	REVISED BLDG. NAMES, ADD KEY PLAN	RWH

PROJECT NAME: KILLIAN CREEK WWTP PHASE 3 UPGRADE

DRAWING TITLE: GRADING AND DRAINAGE DETAIL PLAN

PROJ. MGR.:	CRF
DESIGN BY:	CRF
DRAWN BY:	NS/CH
PROJ. DATE:	SEPT. 2018
DRAWING NUMBER:	C.5 OF 168
WKD PROJ. NO.:	20170294.00.CL

COPYRIGHT © W.K. DICKSON & CO., INC., ALL RIGHTS RESERVED. REPRODUCTION OR USE OF THIS DOCUMENT, ADDITIONS OR MODIFICATIONS THERETO, IN WHOLE OR IN PART, WITHOUT WRITTEN PERMISSION OF W.K. DICKSON & CO., INC., IS PROHIBITED. ONLY COPIES FROM THE ORIGINAL OF THIS DOCUMENT MARKED WITH AN ORIGINAL SIGNATURE AND SEAL SHALL BE CONSIDERED TO BE VALID, TRUE COPIES.

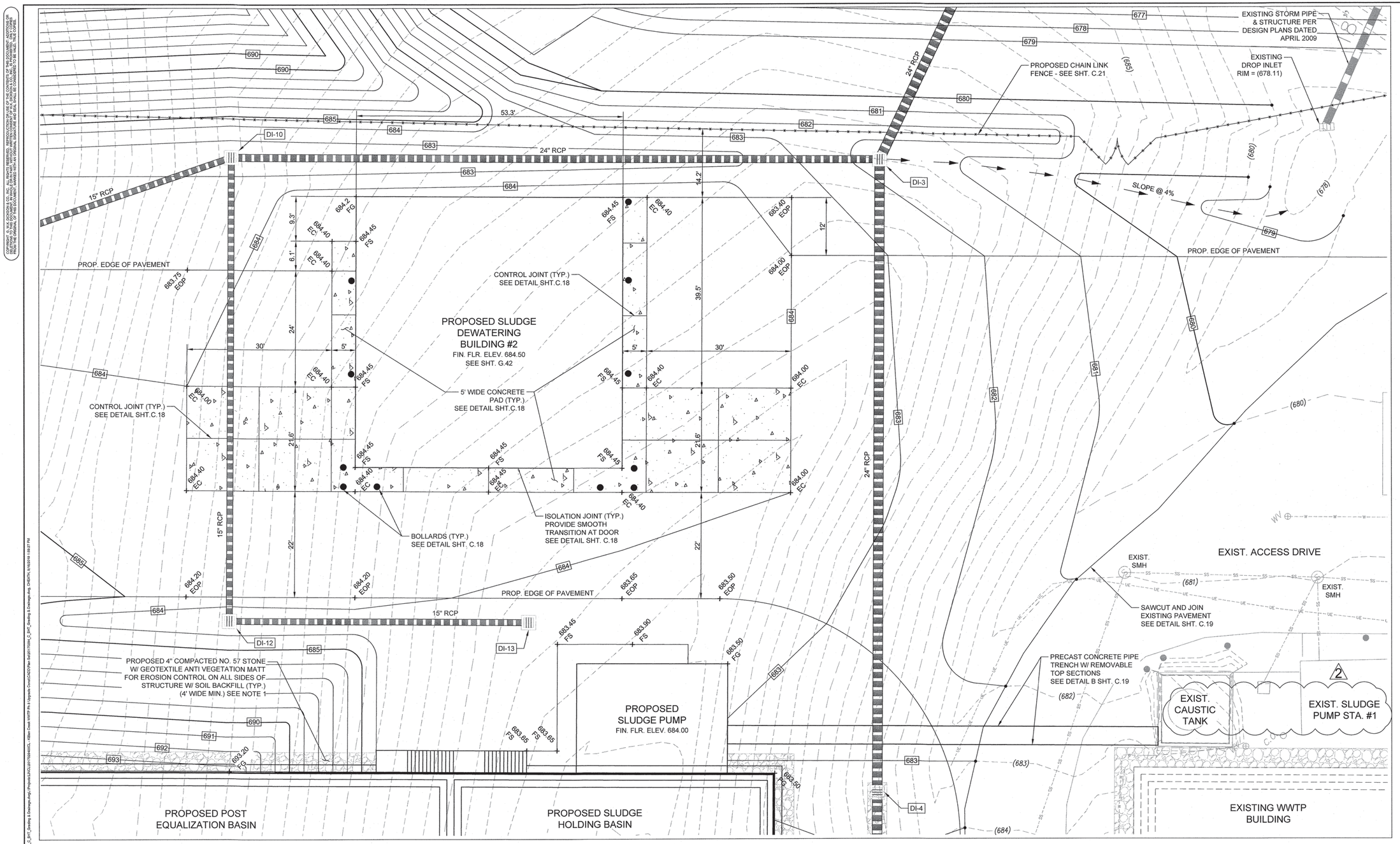

LEGEND

	CONCRETE PAD & SIDEWALK
	4" COMPACTED NO. 57 STONE
678	PROPOSED CONTOUR
(675)	EXISTING CONTOUR
FG	FINISHED GRADE
HP FL	HIGH POINT FLOWLINE
FS	FINISHED SURFACE
SS	EXISTING SANITARY SEWER
W	EXISTING WATER LINE
UE	EXISTING UNDERGROUND ELECTRICAL
	PROPOSED CHAIN LINK FENCE
	EXISTING CHAIN LINK FENCE
	PROPOSED STORM PIPE
	CONCRETE BOLLARDS
EOP	EDGE OF PAVEMENT
EC	EDGE OF CONCRETE

GRADING & DRAINAGE - DETAIL PLAN

SCALE: 1"=10'

NOTES:

1. CONTRACTOR SHALL PROVIDE AND INSTALL A HONEYCONE GEOCELL OF NON-WOVEN POLYEHTYLENE/POLYPROPHYLENE GEOTEXTILE MATERIAL IN DESIGNATED AREAS. THE GEOCELL SHALL HAVE A MINIMUM DEPTH OF 4-INCHES AND SHALL BE FILLED WITH 3/4-INCH STONE WITH A GEOTEXTILE NON-WOVEN FILTER FABRIC MATERIAL INSTALLED UNDER THE GEOCELLS FOR VEGETATION CONTROL. INSTALL THE FILTER FABRIC AND GEOCELLS PER MANUFACTURER RECOMMENDATIONS. APPROVED MANUFACTURERS ARE DUPONT, TYPAR, TERRAM OR EQUAL.
2. SEE SHEETS C.18 AND C.19 FOR DETAILS..

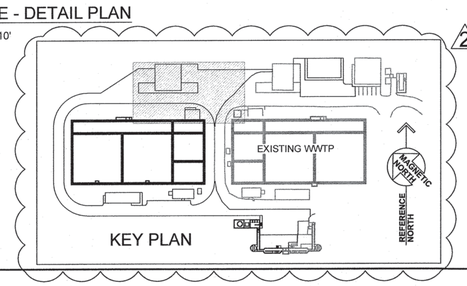

BASIS OF BEARING: NCSPCS NAD 83/95 HARN GRID NORTH

PLANT NORTH

NOTE:
ELEVATIONS FOR THE KILLIAN CREEK PHASE 3 UPGRADE ARE BASED ON THE NAVD88 DATUM.

ELEVATIONS UTILIZED IN 2009 AND 2015 PLANT CONSTRUCTION WERE BASED UPON NGVD29. ELEVATIONS OF EXISTING STRUCTURES AND PIPING HAVE BEEN ADJUSTED TO REFLECT THE NAVD88 DATUM.

GRAPHIC SCALE

10 0 5 10 20 40

(IN FEET)
1 inch = 10 ft.

WK DICKSON
community infrastructure consultants
616 COLONNADE DRIVE
CHARLOTTE, NC 28205
(t)704-334-5348
(f)704-334-0078
WWW.WKDICKSON.COM
NC LICENSE NO.F-0374

NORTH CAROLINA PROFESSIONAL ENGINEER SEAL 8802 CHARLES R. FRONEBERGER 7-26-19

PROFESSIONAL SEAL

REVISION RECORD

NO.	DATE	DESCRIPTION	BY
1	10/9/18	ISSUE FOR OWNER/NCDEQ REVIEW	CRF
2	9/17/19	REVISED BLDG. NAMES, ADD KEY PLAN	RWH

- NOT RELEASED FOR CONSTRUCTION -

FINAL DRAWINGS -

PROJECT NAME: KILLIAN CREEK WWTP PHASE 3 UPGRADE

DRAWING TITLE: GRADING AND DRAINAGE DETAIL PLAN

PROJ. MGR.:	CRF
DESIGN BY:	CRF
DRAWN BY:	NS/CH
PROJ. DATE:	SEPT. 2018

DRAWING NUMBER:

C.6 OF 168

WKD PROJ. NO.:

20170294.00.CL

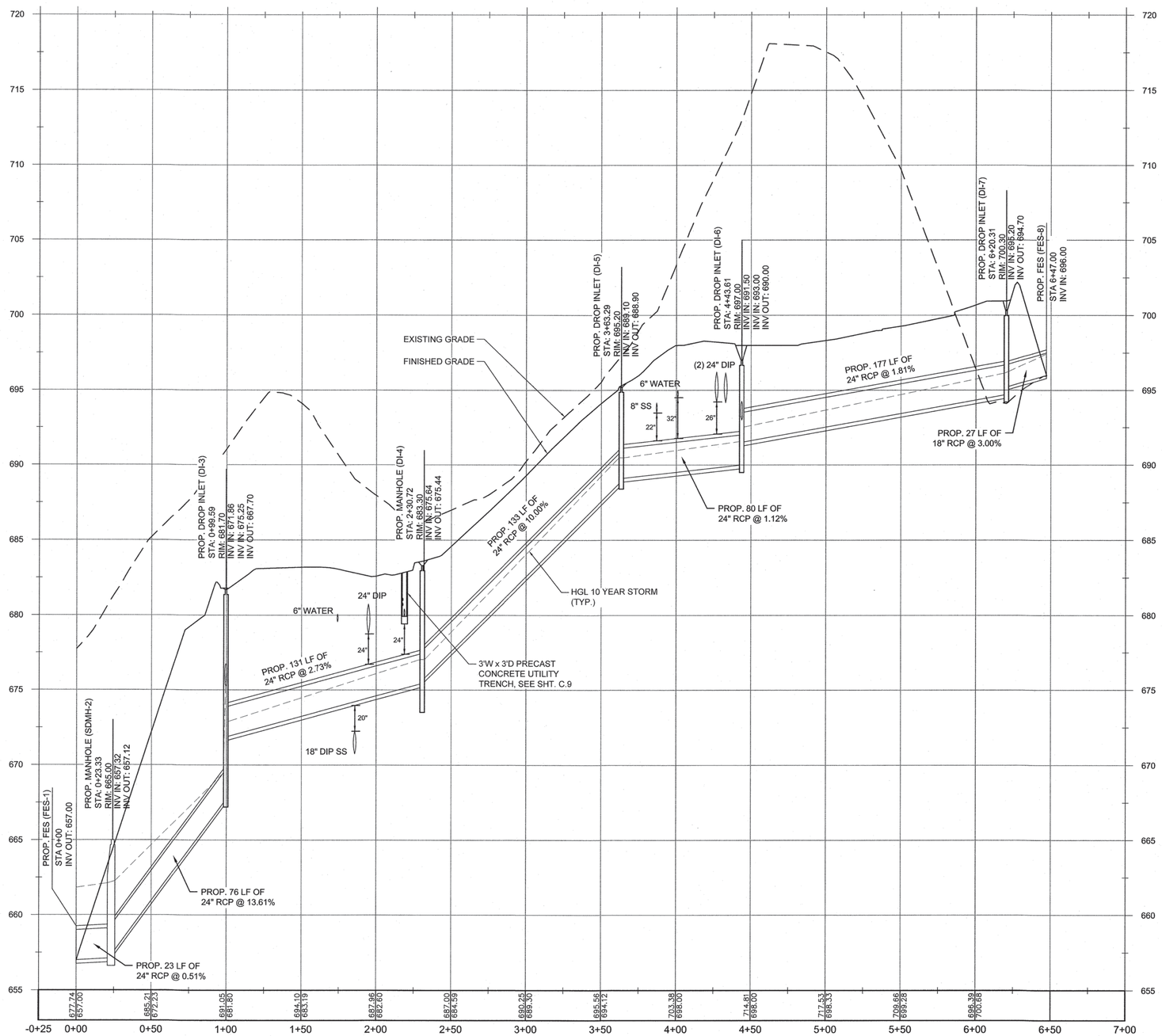

STORM DRAIN 1 PROFILE

SCALE: HOR 1"=40'; VERT 1"=4'

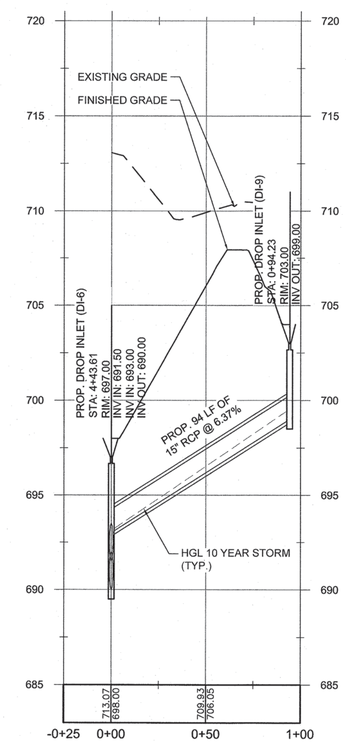

STORM DRAIN 2 PROFILE

SCALE: HOR 1"=40'; VERT 1"=4'

GRAPHIC SCALE

40 0 20 40 80 160

(IN FEET)
1 inch = 40 ft.

WK DICKSON
community infrastructure consultants
616 COLONNADE DRIVE
CHARLOTTE, NC 28205
(t)704-334-5348
(f)704-334-0078
WWW.WKDICKSON.COM
NC LICENSE NO.F-0374

NORTH CAROLINA PROFESSIONAL SEAL 8802 ENGINEER CHARLES R. FRONEBERGER

PROFESSIONAL SEAL

REVISION RECORD

NO.	DATE	DESCRIPTION	BY

FINAL DRAWINGS - NOT RELEASED FOR CONSTRUCTION

PROJECT NAME: KILLIAN CREEK WWTP PHASE 3 UPGRADE

DRAWING TITLE: STORM PROFILES

PROJ. MGR.:	CRF
DESIGN BY:	CRF
DRAWN BY:	NS/CH
PROJ. DATE:	SEPT. 2018

DRAWING NUMBER: C.7 OF 168

WKD PROJ. NO.: 20170294.00.CL

COPYRIGHT © WK DICKSON & CO., INC., ALL RIGHTS RESERVED. REPRODUCTION OR USE OF THE CONTENTS OF THIS DOCUMENT, ADDITIONS OR CHANGES TO THE CONTENTS OF THIS DOCUMENT WITHOUT WRITTEN CONSENT OF WK DICKSON & CO., INC. IS PROHIBITED. COPIES OBTAINED FROM THE ORIGINAL OF THIS DOCUMENT MARKED WITH AN ORIGINAL SIGNATURE AND SEAL SHALL BE CONSIDERED TO BE VALID, TRUE COPIES.

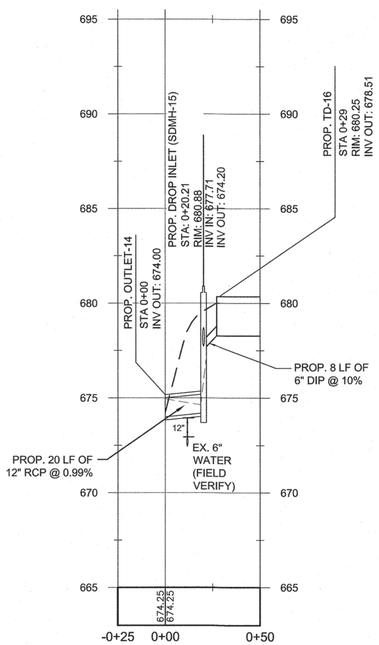

STORM DRAIN 3 PROFILE

SCALE: HOR 1"=40'; VERT 1"=4'

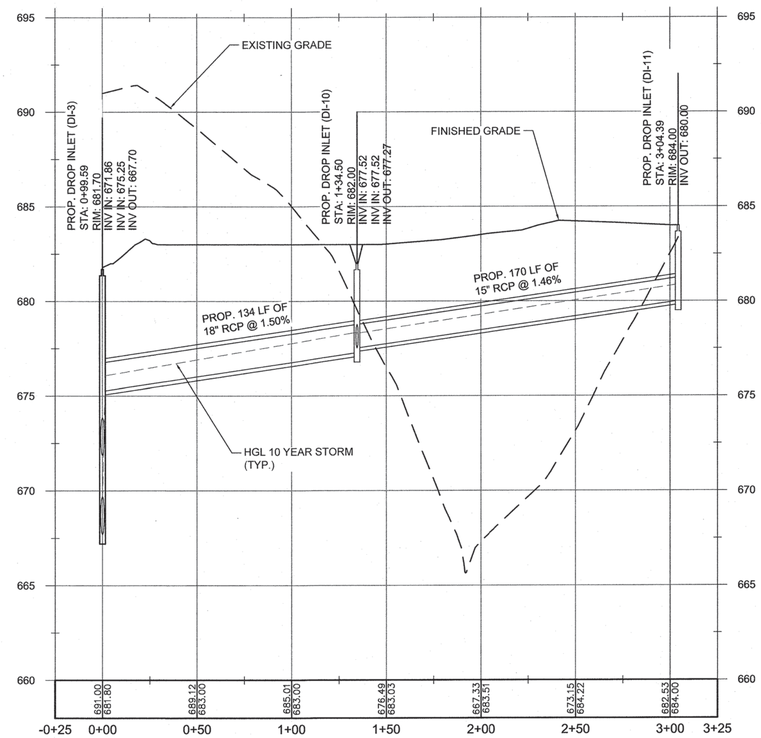

STORM DRAIN 4

SCALE: HOR 1"=40'; VERT 1"=4'

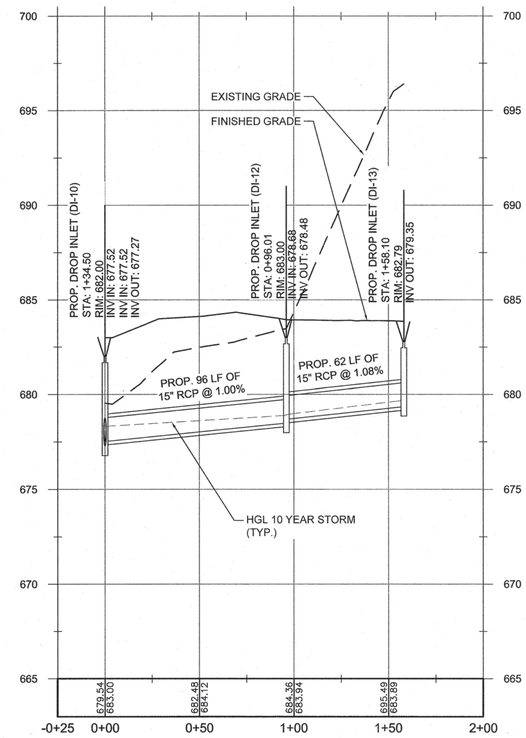

STORM DRAIN 5

SCALE: HOR 1"=40'; VERT 1"=4'

GRAPHIC SCALE

40 0 20 40 80 160

(IN FEET)
1 inch = 40 ft.

- NOT RELEASED FOR CONSTRUCTION -

- FINAL DRAWINGS -

WK DICKSON
community infrastructure consultants

616 COLONNADE DRIVE
CHARLOTTE, NC 28205
(t)704-334-5348
(f)704-334-0078

WWW.WKDICKSON.COM

NC LICENSE NO.F-0374

NORTH CAROLINA PROFESSIONAL ENGINEER SEAL 8802 CHARLES R. FRONSBERGER

PROFESSIONAL SEAL

NO.	DATE	DESCRIPTION	BY

REVISION RECORD

PROJECT NAME: KILLIAN CREEK WWTP PHASE 3 UPGRADE

DRAWING TITLE: STORM PROFILES

PROJ. MGR.:	CRF
DESIGN BY:	CRF
DRAWN BY:	NS/CH
PROJ. DATE:	SEPT. 2018

DRAWING NUMBER:

C.8 OF 168

WKD PROJ. NO.:

20170294.00.CL

COPYRIGHT © 2018 WK DICKSON & CO., INC., ALL RIGHTS RESERVED. REPRODUCTION OR USE OF THE CONTENTS OF THIS DOCUMENT, ADDITIONS OR MODIFICATIONS THERETO, IN WHOLE OR IN PART, WITHOUT WRITTEN PERMISSION OF WK DICKSON & CO., INC., IS PROHIBITED. ALL COPIES FROM THE ORIGINAL OF THIS DOCUMENT, MARKED WITH AN ORIGINAL SIGNATURE AND SEAL SHALL BE CONSIDERED TO BE VALID, TRUE COPIES.

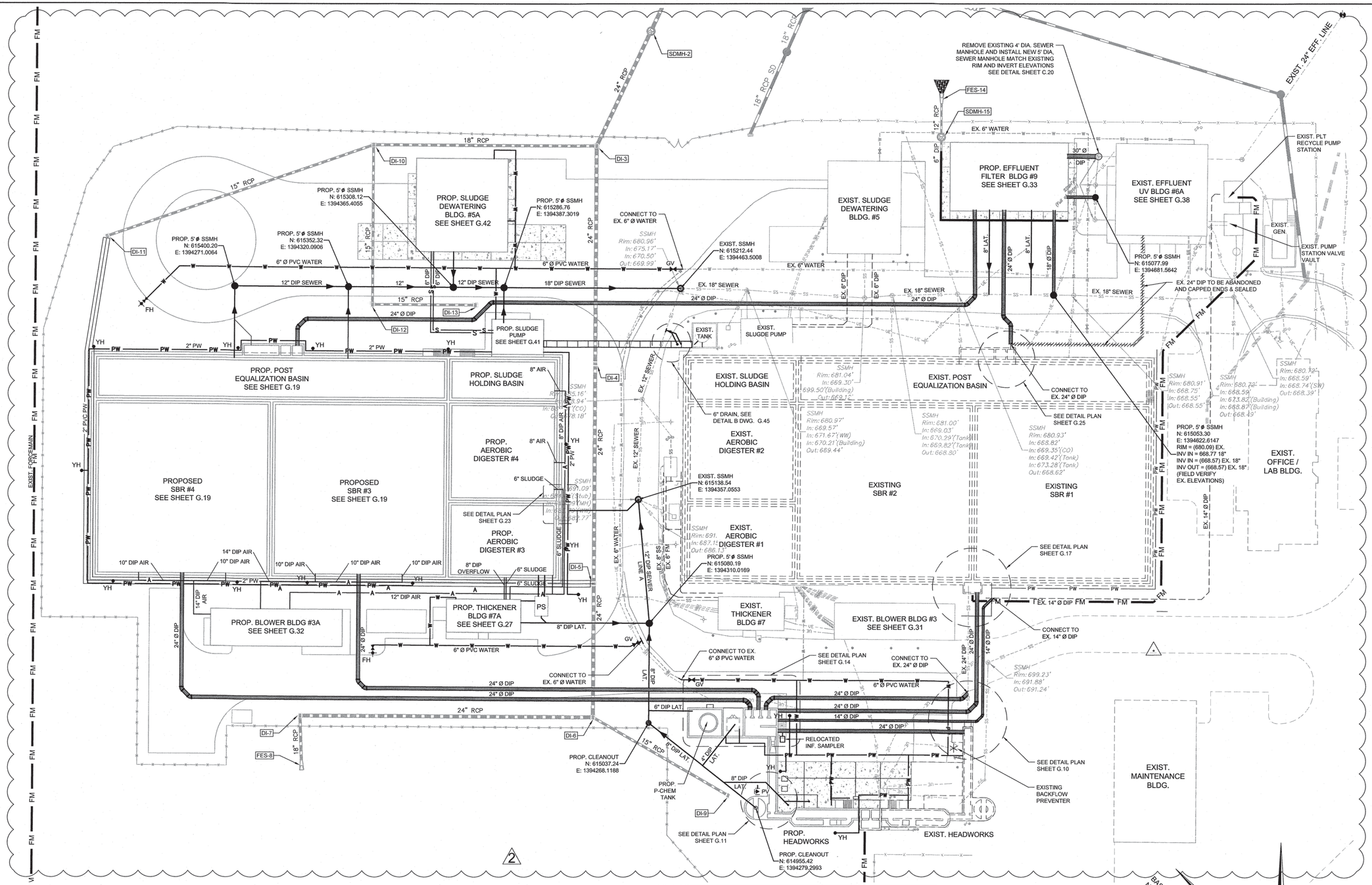

WK DICKSON
community infrastructure consultants
616 COLONNADE DRIVE
CHARLOTTE, NC 28205
(t)704-334-5348
(f)704-334-0078
WWW.WKDICKSON.COM
NC LICENSE NO.F-0374

NORTH CAROLINA PROFESSIONAL ENGINEER SEAL 8802 CHARLES R. FRONEBERGER
PROFESSIONAL SEAL

REVISION RECORD

NO.	DATE	DESCRIPTION	BY
1	10/9/18	ISSUE FOR OWNER/NCDEQ REVIEW	CRF
2	9/17/19	REVISED BLDG. NAMES, TRANSFORMER AND GENERATOR PAD, ELEVATIONS	RWH

FINAL DRAWINGS - NOT RELEASED FOR CONSTRUCTION

PROJECT NAME: KILLIAN CREEK WWTP PHASE 3 UPGRADE

DRAWING TITLE: YARD PIPING PLAN

PROJ. MGR.:	CRF
DESIGN BY:	CRF
DRAWN BY:	NS/CH
PROJ. DATE:	SEPT. 2018

DRAWING NUMBER: C.9 OF 168

WKD PROJ. NO.: 20170294.00.CL

COPYRIGHT © 2018 DICKSON & CO., INC., ALL RIGHTS RESERVED. REPRODUCTION OR USE OF THE CONTENTS OF THIS DOCUMENT, ADDITIONS OR MODIFICATIONS TO THE CONTENTS OF THIS DOCUMENT, IN WHOLE OR IN PART, WITHOUT WRITTEN CONSENT OF DICKSON & CO., INC., IS PROHIBITED. ONLY THOSE SHEETS THAT ARE BEARING THE ORIGINAL OR A COPY OF THE ORIGINAL SIGNATURE AND SEAL SHALL BE CONSIDERED TO BE VALID, TRUE COPIES.

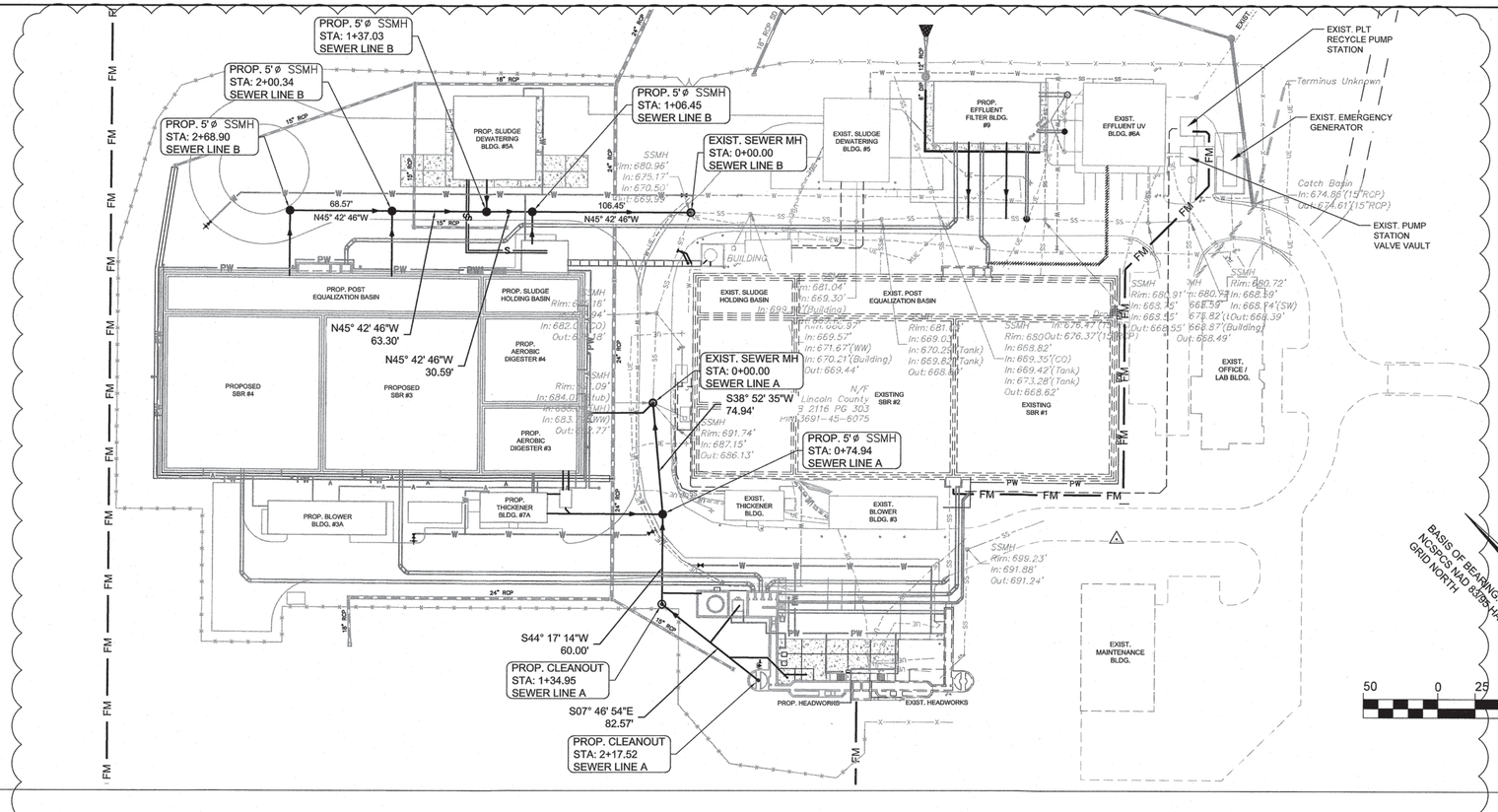

SEWER LINE A

SCALE: 1"=50' HORIZ.; 1"=5' VERT.

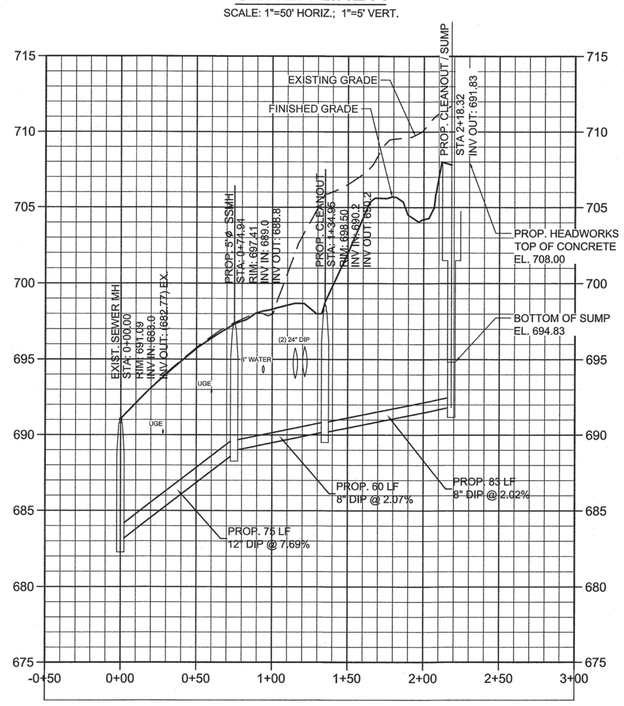

SEWER LINE B

SCALE: 1"=50' HORIZ.; 1"=5' VERT.

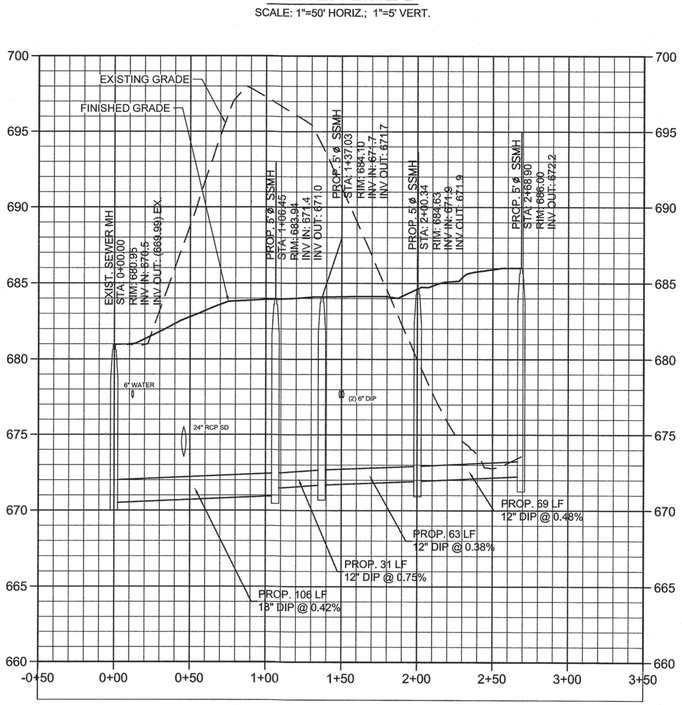

2

FINAL DRAWINGS - - NOT RELEASED FOR CONSTRUCTION

WK DICKSON
community infrastructure consultants
616 COLONNADE DRIVE
CHARLOTTE, NC 28205
(t)704-334-5348
(f)704-334-0078
WWW.WKDICKSON.COM
NC LICENSE NO.F-0374

NORTH CAROLINA PROFESSIONAL ENGINEER SEAL 8802 CHARLES R. FROWEIN

PROFESSIONAL SEAL

REVISION RECORD

NO.	DATE	DESCRIPTION	BY
1	10/9/18	ISSUE FOR OWNER/NCDEQ REVIEW	CRF
2	9/17/19	REVISED BLDG. NAMES, TRANSFORMER AND GENERATOR PAD, ELEVATIONS	RWH

PROJECT NAME: KILLIAN CREEK WWTP PHASE 3 UPGRADE

DRAWING TITLE: PLANT SEWER PLAN AND PROFILE

PROJ. MGR.:	CRF
DESIGN BY:	CRF
DRAWN BY:	NS/CH
PROJ. DATE:	SEPT. 2018

DRAWING NUMBER:

C.10 OF 168

WKD PROJ. NO.:

20170294.00.CL

COPYRIGHT © WK DICKSON & CO., INC., ALL RIGHTS RESERVED. REPRODUCTION OR USE OF THIS CONTENTS OF THIS DOCUMENT, ADDITIONS OR ALTERATIONS TO THIS DOCUMENT WITHOUT WRITTEN PERMISSION OF WK DICKSON & CO., INC. IS PROHIBITED. ADDITIONS OR ALTERATIONS TO THIS DOCUMENT, WHICH WERE ADDED TO THE ORIGINAL SIGNATURE AND SEAL SHALL BE CONSIDERED TO BE VALID. PRINTS CURRENT.

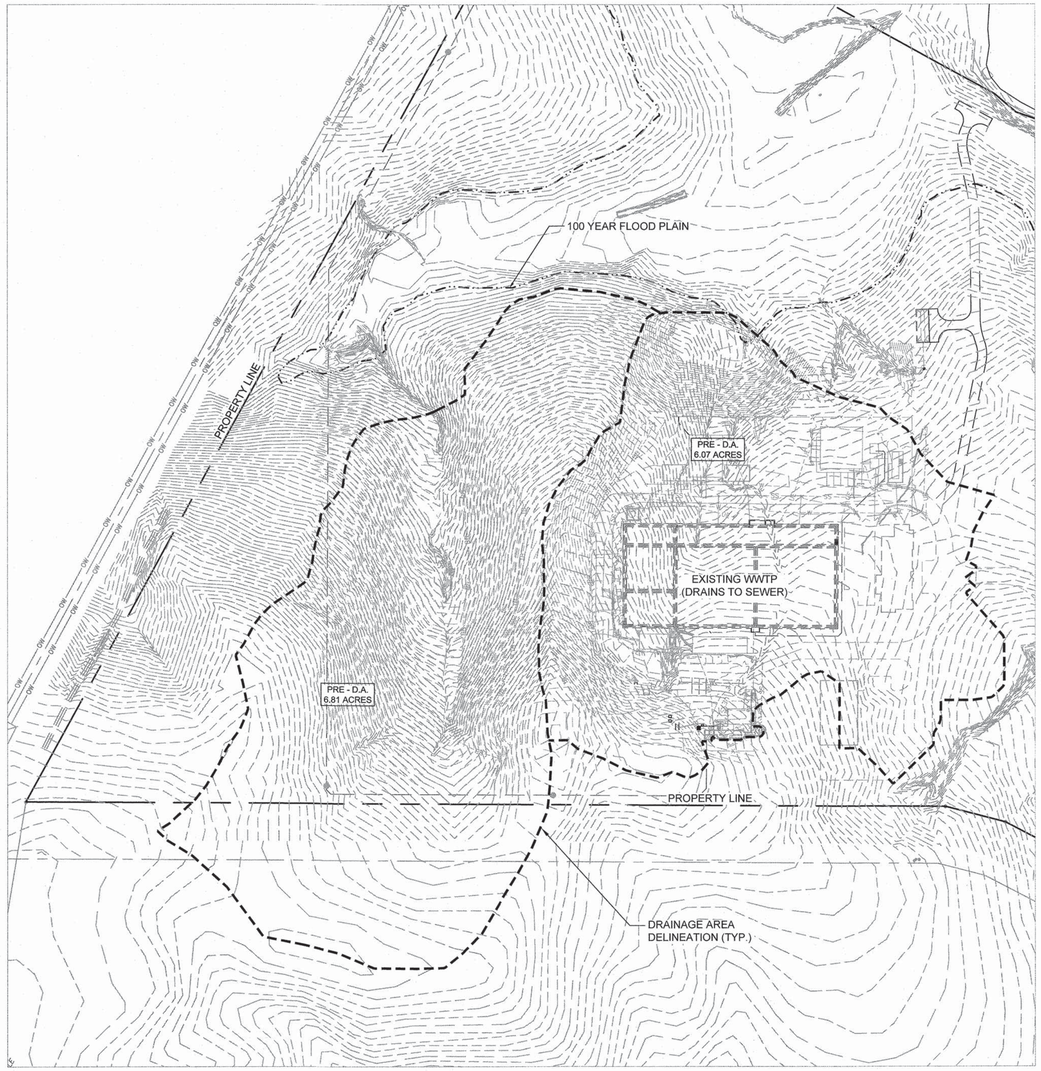

PRE-DEVELOPMENT DRAINAGE AREA

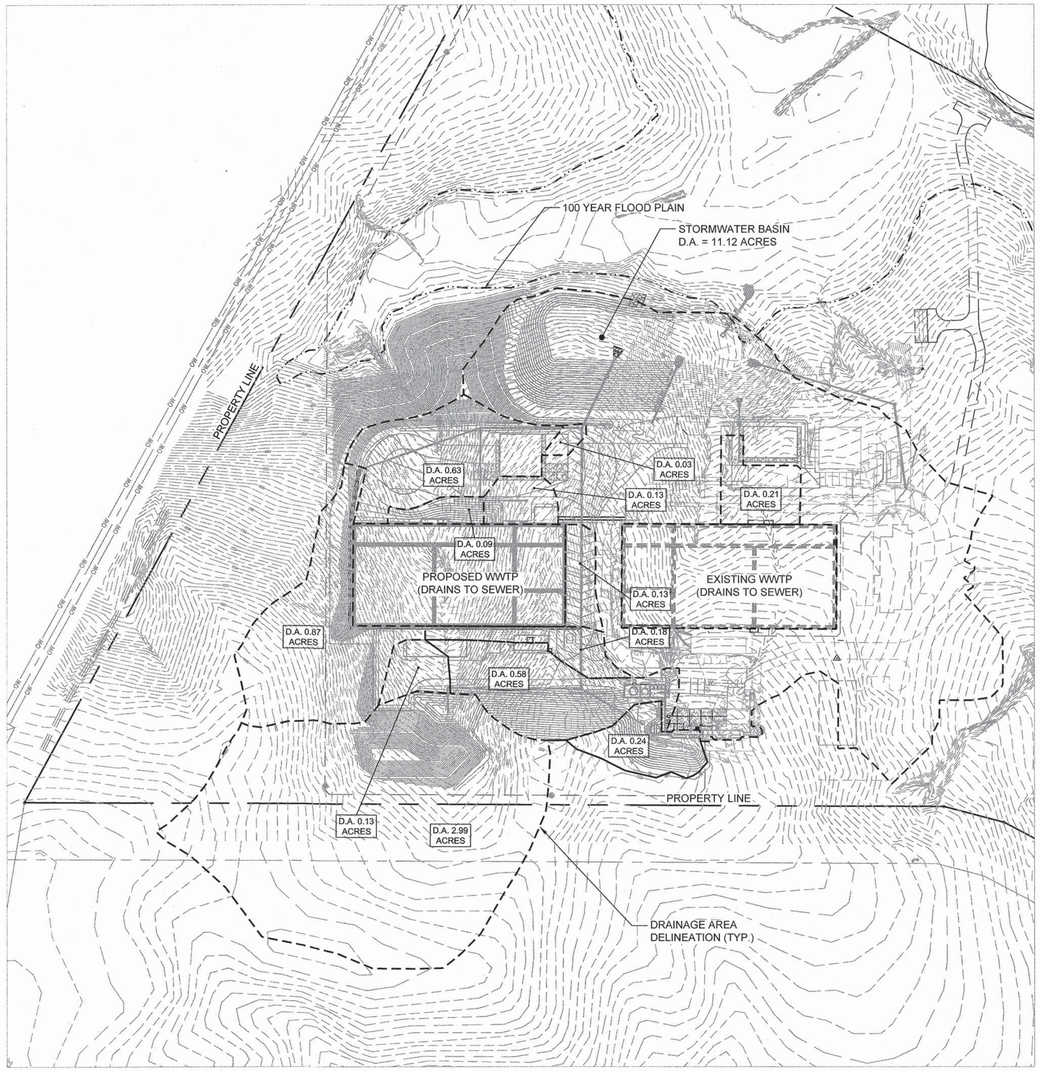

POST-DEVELOPMENT DRAINAGE AREA

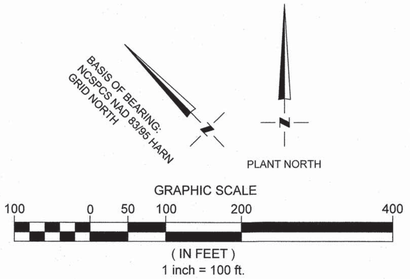

- NOT RELEASED FOR CONSTRUCTION -

FINAL DRAWINGS -

WK DICKSON
community infrastructure consultants
616 COLONNADE DRIVE
CHARLOTTE, NC 28205
(t)704-334-5348
(f)704-334-0078
WWW.WKDICKSON.COM
NC LICENSE NO.F-0374

NORTH CAROLINA PROFESSIONAL SEAL 8802 ENGINEER CHARLES R. FRONTEBERGER

PROFESSIONAL SEAL

NO.	DATE	DESCRIPTION	BY

REVISION RECORD

PROJECT NAME: KILLIAN CREEK WWTP PHASE 3 UPGRADE

DRAWING TITLE: PRE AND POST DRAINAGE AREA MAP

PROJ. MGR.:	CRF
DESIGN BY:	CRF
DRAWN BY:	NS/CH
PROJ. DATE:	SEPT. 2018

DRAWING NUMBER:

C.11 OF 168

WKD PROJ. NO.:

20170294.00.CL

COPYRIGHT © WK DICKSON & CO., INC. ALL RIGHTS RESERVED. REPRODUCTION OR USE OF THE CONTENTS OF THIS DOCUMENT, INCLUDING BY ELECTRONIC MEANS, WITHOUT THE WRITTEN PERMISSION OF WK DICKSON & CO., INC. IS PROHIBITED. ACCEPTANCE OF THIS DOCUMENT IMPLIES THE ACCEPTANCE OF THE ABOVE STATEMENT. ONLY PRINTS FROM THE ORIGINAL OF THIS DOCUMENT MARKED WITH AN ORIGINAL SIGNATURE AND SEAL SHALL BE CONSIDERED TO BE VALID, TRUE COPIES.

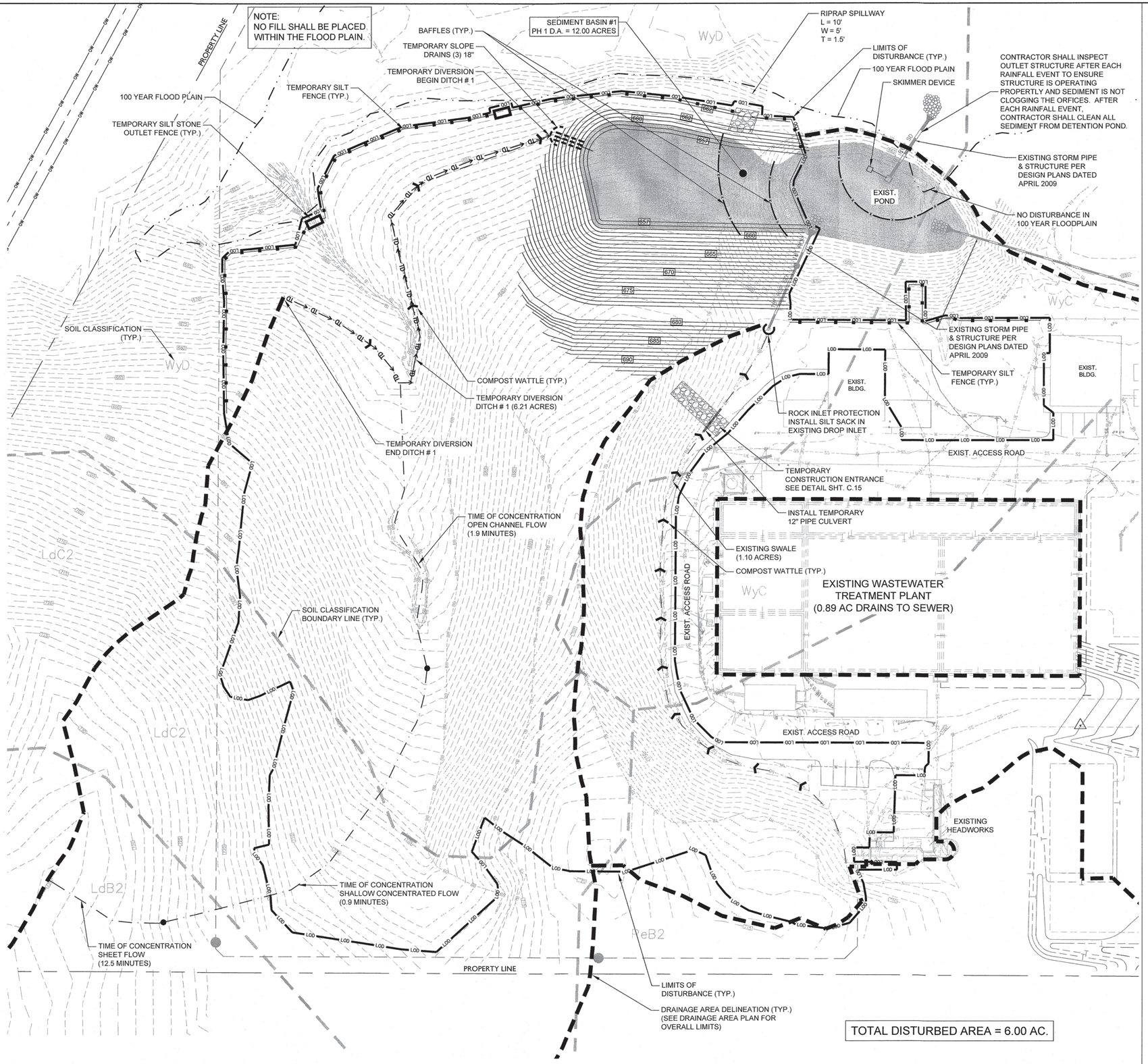

LEGEND (EROSION CONTROL)

SYMBOL

- STABILIZED CONSTRUCTION ENTRANCE
- TEMPORARY SILT FENCE
- TEMPORARY SILT FENCE OUTLET
- STONE INLET PROTECTION
- GRAVEL RIP RAP APRON
- LOD — LIMITS OF DISTURBANCE
- DRAINAGE AREA
- TD — TEMPORARY DIVERSION DITCH
- PROPOSED STORM DRAINAGE
- SEDIMENT BASIN BAFFLE
- SEDIMENT BASIN
- SEDIMENT BASIN SKIMMER
- SPILLWAY
- FLEXIBLE PIPE SLOPE DRAIN
- TEMPORARY WATTLE CHECK DAM
- PeB2 / LcD2 — SOILS DELINEATION

- CONTRACTOR SHALL INSTALL THE SILT FENCE AT THE LIMITS OF DISTURBANCE WHERE PROPOSED GRADING IS WITHIN FIVE FEET (5') OF THE LIMITS OF DISTURBANCE. SILT FENCE IS SHOWN OFFSET FROM THE LIMITS OF DISTURBANCE FOR VISUAL PURPOSES ONLY.

- CONTRACTOR SHALL MODIFY TEMPORARY DIVERSION DITCHES THROUGHOUT CONSTRUCTION TO ENSURE DRAINAGE AREAS FOR BASIN REMAINS THE SAME. CONTRACTOR TO ENSURE NO STORMWATER IS SENT TO SILT FENCE THAT IS SUPPOSE TO GO TO EROSION CONTROL PONDS.

BASIS OF BEARING: NCSPCS NAD 83/95 HARN GRID NORTH

PLANT NORTH

GRAPHIC SCALE

40 0 20 40 80 160

(IN FEET)
1 inch = 40 ft.

FINAL DRAWINGS - ' - NOT RELEASED FOR CONSTRUCTION

WK DICKSON
community infrastructure consultants
616 COLONNADE DRIVE
CHARLOTTE, NC 28205
(t)704-334-5348
(f)704-334-0078
WWW.WKDICKSON.COM
NC LICENSE NO.F-0374

NORTH CAROLINA PROFESSIONAL SEAL 8802 ENGINEER CHARLES R. FROMBERGER

PROFESSIONAL SEAL

NO.	DATE	DESCRIPTION	BY

REVISION RECORD

PROJECT NAME: KILLIAN CREEK WWTP PHASE 3 UPGRADE

DRAWING TITLE: EROSION CONTROL PLAN - PHASE I

PROJ. MGR.:	CRF
DESIGN BY:	CRF
DRAWN BY:	NS/CH
PROJ. DATE:	SEPT. 2018

DRAWING NUMBER:

C.12 OF 168

WKD PROJ. NO.:

20170294.00.CL

COPYRIGHT © W.K. DICKSON & CO., INC., ALL RIGHTS RESERVED. REPRODUCTION OF USE OF THE CONTENTS OF THE DOCUMENT, ADDITIONS OR DELETIONS TO THE DOCUMENT WITHOUT WRITTEN PERMISSION IS PROHIBITED. ONLY PRINTS FROM THE ORIGINAL OF THIS DOCUMENT MARKED WITH AN ORIGINAL SIGNATURE AND SEAL SHALL BE CONSIDERED TO BE VALID, TRUE COPIES.

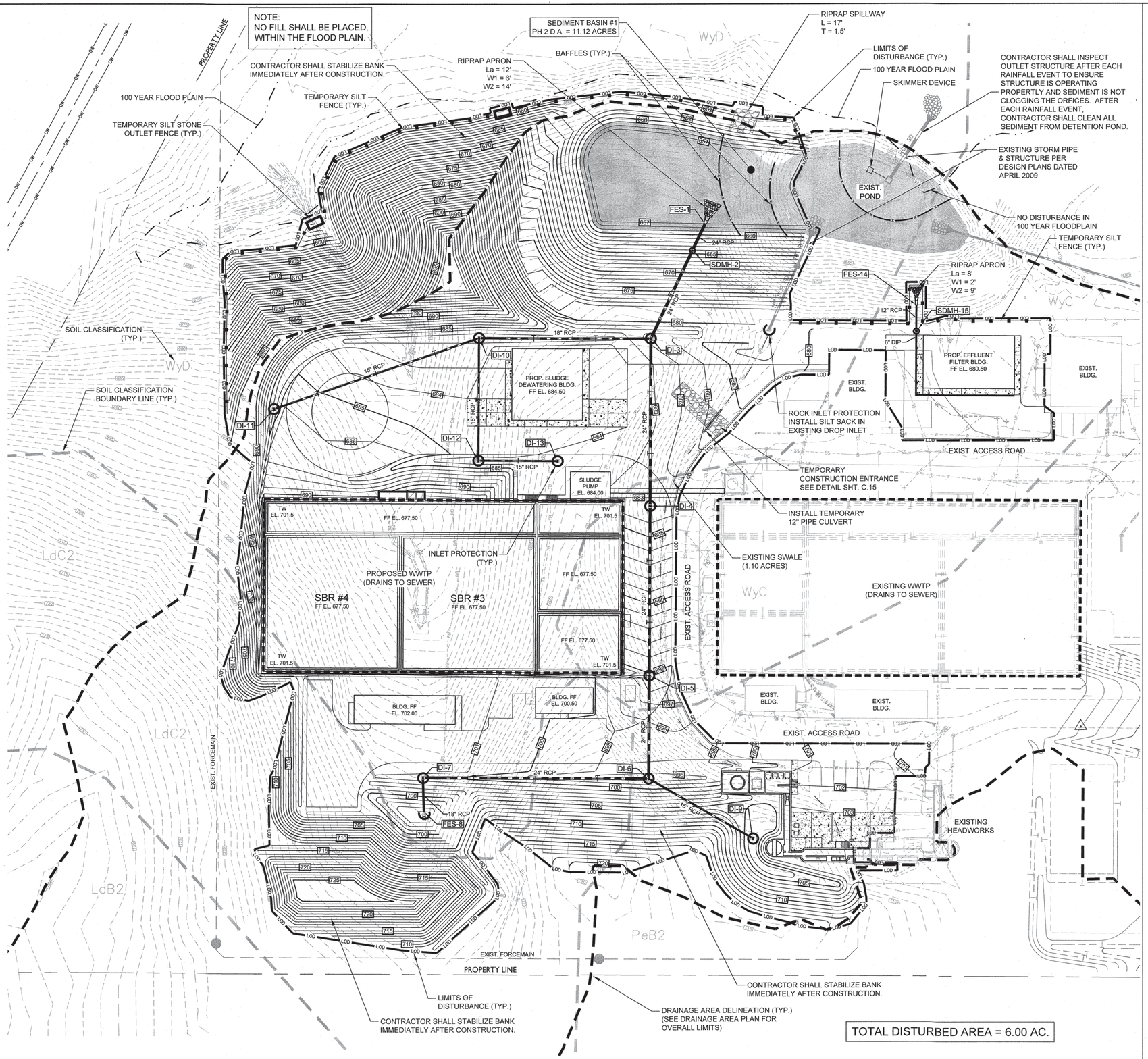

LEGEND (EROSION CONTROL)

SYMBOL

- STABILIZED CONSTRUCTION ENTRANCE
- TEMPORARY SILT FENCE
- TEMPORARY SILT FENCE OUTLET
- STONE INLET PROTECTION
- GRAVEL RIP RAP APRON
- LOD — DENUDED LIMITS
- DRAINAGE AREA
- TD — TEMPORARY DIVERSION DITCH
- PROPOSED STORM DRAINAGE
- SEDIMENT BASIN BAFFLE
- SEDIMENT BASIN
- SEDIMENT BASIN SKIMMER
- SPILLWAY
- FLEXIBLE PIPE SLOPE DRAIN
- TEMPORARY WATTLE CHECK DAM
- PeB2 / LcD2 — SOILS DELINEATION

- CONTRACTOR SHALL INSTALL THE SILT FENCE AT THE LIMITS OF DISTURBANCE WHERE PROPOSED GRADING IS WITHIN FIVE FEET (5') OF THE LIMITS OF DISTURBANCE. SILT FENCE IS SHOWN OFFSET FROM THE LIMITS OF DISTURBANCE FOR VISUAL PURPOSES ONLY.
- CONTRACTOR SHALL MODIFY TEMPORARY DIVERSION DITCHES THROUGHOUT CONSTRUCTION TO ENSURE DRAINAGE AREAS FOR BASIN REMAINS THE SAME. CONTRACTOR TO ENSURE NO STORMWATER IS SENT TO SILT FENCE THAT IS SUPPOSE TO GO TO EROSION CONTROL PONDS.

BASIS OF BEARING: NCSPCS NAD 83/95 HARN GRID NORTH

PLANT NORTH

GRAPHIC SCALE

40 0 20 40 80 160

(IN FEET)
1 inch = 40 ft.

FINAL DRAWINGS

- NOT RELEASED FOR CONSTRUCTION

WK DICKSON
community infrastructure consultants
616 COLONNADE DRIVE
CHARLOTTE, NC 28205
(t)704-334-5348
(f)704-334-0078
WWW.WKDICKSON.COM
NC LICENSE NO.F-0374

NORTH CAROLINA PROFESSIONAL SEAL 8802 ENGINEER CHARLES F. FROELICHER III

PROFESSIONAL SEAL

NO.	DATE	DESCRIPTION	BY

REVISION RECORD

PROJECT NAME: KILLIAN CREEK WWTP PHASE 3 UPGRADE

DRAWING TITLE: EROSION CONTROL PLAN - PHASE II

PROJ. MGR.:	CRF
DESIGN BY:	CRF
DRAWN BY:	NS/CH
PROJ. DATE:	SEPT. 2018
DRAWING NUMBER:	

C.13 OF 168

WKD PROJ. NO.: 20170294.00.CL

COPYRIGHT ©, W.K. DICKSON & CO., INC. ALL RIGHTS RESERVED. REPRODUCTION OR USE OF THE CONTENTS OF THIS DOCUMENT; ADDITIONS OR DELETIONS TO THIS DOCUMENT, IN WHOLE OR IN PART, WITHOUT WRITTEN CONSENT OF W.K. DICKSON & CO., INC. IS PROHIBITED. ONLY COPIES FROM THE ORIGINAL OF THIS DOCUMENT, MARKED WITH AN ORIGINAL SIGNATURE AND SEAL SHALL BE CONSIDERED TO BE VALID, TRUE COPIES.

EROSION CONTROL MAINTENANCE PLAN

1. ALL SEDIMENT AND EROSION CONTROL DEVICES SHALL BE INSPECTED EVERY SEVEN (7) DAYS OR AFTER EACH RAINFALL OCCURRENCE THAT EXCEEDS ONE-HALF (0.5) INCH.
2. ALL EROSION CONTROL DEVICES SHALL BE PROPERLY MAINTAINED DURING ALL PHASES OF CONSTRUCTION UNTIL THE COMPLETION OF ALL CONSTRUCTION ACTIVITIES AND ALL DISTURBED AREAS HAVE BEEN STABILIZED. ADDITIONAL CONTROL DEVICES MAY BE REQUIRED DURING CONSTRUCTION IN ORDER TO CONTROL EROSION AND/OR OFFSITE SEDIMENTATION. ALL TEMPORARY CONTROL DEVICES SHALL BE REMOVED ONCE CONSTRUCTION IS COMPLETE AND THE SITE IS STABILIZED.
3. SEDIMENT WILL BE REMOVED FROM BEHIND THE SILT FENCE WHEN IT BECOMES ABOUT 0.5 FEET DEEP AT THE FENCE. THE SEDIMENT FENCE WILL BE REPAIRED OR REPLACED AS NECESSARY TO MAINTAIN A BARRIER.
4. ALL AREAS WILL BE FERTILIZED, RESEEDED AS NECESSARY, AND MULCHED ACCORDING TO SPECIFICATIONS IN THE VEGETATIVE PLAN TO MAINTAIN A VIGOROUS, DENSE VEGETATIVE COVER.
5. STONE CONSTRUCTION ENTRANCE TO BE CLEANED WHEN SEDIMENT ACCUMULATIONS ARE VISIBLE OR SEDIMENT IS TRACKED ON TO THE PAVEMENT. THE FIRST 50' OF THE ENTRANCE ADJACENT TO THE ROAD WILL BE PERIODICALLY TOP DRESSED WITH 2 INCHES OF #4 STONE TO MAINTAIN A 6 INCH DEPTH. THE REMAINDER OF THE CONSTRUCTION ENTRANCE WILL BE CLASS A STONE. THE CONTRACTOR SHALL DAILY REMOVE MUD/SOIL FROM PAVEMENT, AS MAY BE REQUIRED.
6. CONTRACTOR SHALL TAKE ADDITIONAL STEP AS NEEDED TO ENSURE REESTABLISHMENT OF VEGETATION IS ACHIEVED IN WETLAND AREAS ON A CASE BY CASE BASIS.

CONSTRUCTION SEQUENCE

1. OBTAIN GRADING/EROSION CONTROL PLAN APPROVAL AND ALL OTHER APPLICABLE PERMITS PRIOR TO ANY LAND DISTURBIBING ACTIVITY.
2. SET UP AN ON-SITE PRE-CONSTRUCTION CONFERENCE WITH EROSION CONTROL INSPECTOR TO DISCUSS EROSION CONTROL MEASURES. FAILURE TO SCHEDULE SUCH CONFERENCE 48 HOURS PRIOR TO ANY LAND DISTURBING ACTIVITY IS A VIOLATION AND IS SUBJECT TO A FINE.
3. INSTALL CONSTRUCTION ENTRANCE, SILT FENCE, SILT FENCE OUTLETS, AND TREE PROTECTION, CLEARING ONLY AS NECESSARY TO INSTALL THESE DEVICES.
4. INSTALL SEDIMENT BASINS, CLEARING ONLY AS NECESSARY.
5. THE DOWN GRADIENT PERIMETER OF THE PROJECT MAY NOT BE LEFT UNPROTECTED DURING THE INSTALLATION OF SEDIMENT BASINS UNTIL AFTER ALL BASINS ARE INSTALLED.
6. INSTALL DIVERSION DITCHES, SLOPE DRAINS, AND OTHER DEVICES CALLED FOR ON THE PLANS, CLEARING ONLY AS NECESSARY.
7. COORDINATE WITH EROSION CONTROL INSPECTOR TO OBTAIN APPROVAL THAT EROSION CONTROL MEASURES ARE INSTALLED CORRECTLY.
8. CLEAR AND GRUB SITE.
9. MAINTAIN ALL EROSION CONTROL MEASURES OUTLINED ON THE EROSION CONTROL PLANS, NOTES, AND DETAILS.
10. PROCEED WITH CONSTRUCTION.
11. ONCE STORM DRAINAGE HAS BEEN INSTALLED, INSTALL TEMPORARY SILT SACKS AND INLET PROTECTION ACCORDING TO THE PLANS.
12. ADJUST EROSION CONTROL MEASURES AS NEEDED DURING CONSTRUCTION. COORDINATE WITH EROSION CONTROL INSPECTOR.
13. STABILIZATION TIME FRAMES APPLY TO ANY PERIOD OF INACTIVITY. SEE SEEDING STABILIZATION TIME FRAMES.
14. ONCE SITE IS STABILIZED, COORDINATE WITH EROSION CONTROL INSPECTOR TO OBTAIN APPROVAL TO REMOVE EROSION CONTROL MEASURES.

EROSION CONTROL NOTES:

1. ALL EROSION CONTROL MEASURES SHALL BE IN STRICT ACCORDANCE WITH LOCAL AND/OR STATE STANDARDS.
2. THE CONTRACTOR SHALL DILIGENTLY AND CONTINUOUSLY MAINTAIN ALL EROSION CONTROL DEVICES AND STRUCTURES TO MINIMIZE SEDIMENTATION. THE CONTRACTOR SHALL MAINTAIN CLOSE CONTACT WITH INSPECTOR SO THAT PERIODIC INSPECTIONS CAN BE CONDUCTED AT APPROPRIATE STAGES OF CONSTRUCTION.
3. THE TOTAL DENUDED AREA IS 5.40 ACRES.
4. THE TOTAL DRAINAGE AREAS: (PHASE 2) = 6.74 ACRES; (PHASE 1) = 6.65 ACRES
5. FINAL LOCATION OF SILT FENCE, DIVERSION DITCHES, ETC. SHALL BE ADJUSTED IN THE FIELD BY CONTRACTOR BASED ON SITE CONDITIONS AND INSPECTOR'S RECOMMENDATIONS.
6. ADDITIONAL MEASURES TO CONTROL EROSION AND SEDIMENT MAY BE REQUIRED BY EROSION CONTROL INSPECTOR.
7. THE SITE SHALL BE GRADED DURING CONSTRUCTION TO ALLOW ALL STORM WATER TO DRAIN TO EROSION CONTROL DEVICES.
8. ALL INLETS AND CATCH BASINS SHOULD BE PROTECTED AND MAINTAINED BY SILT SACK OR EQUAL INLET PROTECTION IN ADDITION TO THE MEASURES SHOWN.
9. AN EROSION AND SEDIMENT CONTROL PLAN REQUIRED FOR ANY OFF-SITE BORROW OR WASTE AREA ASSOCIATED WITH THIS SITE WILL BE CONSIDERED THE RESPONSIBILITY OF THE PERSON(S) FINANCIALLY RESPONSIBLE FOR THE LAND DISTURBING ACTIVITY. THE DELEGATION OF THIS RESPONSIBILITY TO THE CONTRACTOR IS CONSIDERED AN OWNER/CONTRACTOR AGREEMENT.
10. FOLLOWING EVERY RAINFALL EVENT GREATER THAN 0.5 INCHES, CONTRACTOR SHALL INSPECT AND REPAIR, AS NECESSARY, ALL DAMAGED EROSION CONTROL MEASURES. THIS INCLUDES BUT IS NOT LIMITED TO SILT FENCE, CONSTRUCTION ENTRANCES, SILT FENCE OUTLET DEVICES, AND INLET PROTECTION. TYPICAL MAINTENANCE INCLUDES CHECKING FOR STRUCTURAL DEFICIENCIES SUCH AS UNDERMINING AND DEBRIS BUILDUP AROUND SILT FENCE.
11. CONTRACTOR SHALL TAKE ALL PRACTICAL MEASURES TO MINIMIZE DISTURBED AREA AND TO ENSURE THAT THE DISTURBED AREAS ARE STABILIZED WITH VEGETATION AS SOON AS POSSIBLE.
12. LOCATE AREAS DEDICATED FOR MANAGEMENT OF LAND CLEARING AND DEMOLITION DEBRIS, CONSTRUCTION AND DOMESTIC WASTE, AND HAZARDOUS OR TOXIC WASTE AT LEAST 50 FEET AWAY FROM STORM DRAIN INLETS AND SURFACE WATERS UNLESS IT CAN BE SHOWN THAT NO ALTERNATIVES ARE REASONABLY AVAILABLE.
13. LOCATE EARTHEN-MATERIAL STOCK PILE AREAS AT LEAST 50 FEET AWAY FROM STORM DRAIN INLETS AND SURFACE WATERS UNLESS IT CAN BE SHOWN THAT NO OTHER ALTERNATIVES ARE REASONABLY AVAILABLE.
14. SILT FENCE SHALL BE INSTALLED AT LEAST 5 FEET OFF THE TOE OF ALL FILL SLOPES.
15. SILT FENCE SHALL BE INSTALLED AT LEAST 10 FEET OFF THE TOE OF ALL FILL SLOPES GREATER THAN 10 FEET IN HEIGHT.
16. ANY OFF-SITE BORROW AND WASTE REQUIRED FOR THIS PROJECT MUST COME FROM A SITE WITH AN APPROVED EROSION CONTROL PLAN, A SITE REGULATED UNDER THE MINING ACT OF 1971, OR A LANDFILL REGULATED BY THE DIVISION OF SOLID WASTE MANAGEMENT. TRASH/DEBRIS FROM DEMOLITION ACTIVITIES MUST BE DISPOSED OF AT A FACILITY REGULATED BY THE DIVISION OF SOLID WASTE MANAGEMENT.
17. ADDITIONAL MEASURES MAY BE REQUIRED - THE APPLICANT IS RESPONSIBLE FOR THE CONTROL OF SEDIMENT ON-SITE. IF THE APPROVED EROSION AND SEDIMENTATION CONTROL MEASURES PROVE INSUFFICIENT, THE APPLICANT MUST TAKE THOSE ADDITIONAL STEPS NECESSARY TO STOP SEDIMENT FROM LEAVING THIS SITE.
18. NO CONCRETE WASHOUTS OR ANY SIMILAR TYPE USE MAY BE LOCATED WITH FIFTY (50') OF A CATCH BASIN, DRAINAGE INLET OR ANY OTHER SIMILAR STRUCTURE.
19. AN EROSION CONTROL INSPECTION IS REQUIRED AT THE BEGINNING AND END OF EACH PHASE OF THE EROSION CONTROL PLAN. UNTIL ONE PHASE IS INSPECTED AND PASSED ANOTHER CANNOT BEGIN.

DEMOLITION/EXISTING CONDITIONS NOTES:

1. CONTRACTOR IS FULLY RESPONSIBLE FOR CONTACTING APPROPRIATE PARTIES AND ASSURING THAT EXISTING UTILITIES ARE LOCATED PRIOR TO BEGINNING CONSTRUCTION.
2. CONTRACTOR IS RESPONSIBLE FOR PLACING BARRICADES, ETC AS NECESSARY TO ENSURE THE SAFETY OF THE PUBLIC.
3. ALL PAVEMENT CUTS, CONCRETE OR ASPHALT, ARE TO BE PLACED IN ACCORDANCE WITH THE STANDARDS OF THE NORTH CAROLINA DEPARTMENT OF TRANSPORTATION.
4. SHORING WILL BE IN ACCORDANCE WITH OSHA TRENCHING STANDARDS PART 1926, SUBPART P OR AS AMENDED.
5. CONTRACTOR SHALL ESTABLISH EROSION CONTROL MEASURES PRIOR TO DEMOLITION OF EXISTING STRUCTURES.
6. CONTRACTOR SHALL ADHERE TO ALL LOCAL, STATE AND FEDERAL RULES AND REGULATIONS CONCERNING THE DEMOLITION AND REMOVAL OFFSITE OF ALL CONSTRUCTION DEBRIS.
7. CONTRACTOR SHALL COMPLETE DEMOLITION WORK IN AN EXPEDITIOUS AND TIMELY MANNER.
8. ABANDONMENT OR REMOVAL OF EXISTING WELLS, SEPTIC SYSTEMS AND ASSOCIATED APPURTENANCE SHALL BE PERFORMED IN ACCORDANCE WITH REGULATORY GUIDELINES AND PROCEDURES ESTABLISHED BY THE NORTH CAROLINA DEPARTMENT OF NATURAL RESOURCES, AND ANY ASSOCIATED REGULATORY AGENCIES.
9. DEMOLITION CONTRACTOR, AND ASSOCIATED SUBCONTRACTORS, ARE RESPONSIBLE FOR CONTACTING AND COORDINATING WITH EACH AFFECTED UTILITY COMPANY PRIOR TO THE REMOVAL OR DISCONNECTION OF ANY EXISTING SERVICES ON SITE.
10. CONTRACTOR SHALL CONTACT ALL AFFECTED UTILITY COMPANIES PRIOR TO BEGINNING DEMOLITION.

TEMPORARY SEEDING - LATE WINTER/EARLY SPRING

SEEDING MIXTURE

SPECIES	RATE (LB/ACRE)
RYE (GRAIN)	120
ANNUAL LESPEDEZA (KOBE IN PIEDMONT AND COASTAL PLAIN, KOREAN IN MOUNTAINS)	50

OMIT ANNUAL LESPEDEZA WHEN DURATION OF TEMPORARY COVER IS NOT TO EXTEND BEYOND JUNE.

SEEDING DATES
MOUNTAINS - ABOVE 2500 FT: FEB. 15-MAY 15
BELOW 2500 FT: FEB. 1-MAY 1
PIEDMONT - JAN. 1-MAY 1
COASTAL PLAIN - DEC.1-APR. 15

SOIL AMENDMENTS
FOLLOW RECOMMENDATIONS OF SOIL TESTS OR APPLY 2,000 LB/ACRE GROUND AGRICULTURAL LIMESTONE AND 750 LB/ACRE 10-10-10 FERTILIZER.

MULCH
APPLY 4,000 LB/ACRE STRAW. ANCHOR STRAW BY TACKING WITH ASPHALT, NETTING OR AS MULCH ANCHORING TOOL. A DISK WITH BLADES SET NEARLY STRAIGHT CAN BE USED AS A MULCH ANCHORING TOOL.

MAINTENANCE
REFERTILIZE IF GROWTH IS NOT FULLY ADEQUATE. RESEED, REFERTILIZE AND MULCH IMMEDIATELY FOLLOWING EROSION OR OTHER DAMAGE.

TEMPORARY SEEDING SCHEDULE - SUMMER

SEEDING MIXTURE

SPECIES	RATE (LB/ACRE)
GERMAN MILLET	40

IN THE PIEDMONT AND MOUNTAINS, A SMALL-STEMMED SUDANGRASS MAY BE SUBSTITUTED AT A RATE OF 50 LB/ACRE.

SEEDING DATES
MOUNTAINS - MAY 15-AUG. 15
PIEDMONT - MAY 1-AUG. 15
COASTAL PLAIN - APR. 15-AUG. 15

SOIL AMENDMENTS
FOLLOW RECOMMENDATIONS OF SOIL TESTS OR APPLY 2,000 LB/ACRE GROUND AGRICULTURAL LIMESTONE AND 750 LB/ACRE 10-10-10 FERTILIZER.

MULCH
APPLY 4,000 LB/ACRE STRAW. ANCHOR STRAW BY TACKING WITH ASPHALT, NETTING OR A MULCH ANCHORING TOOL. A DISK WITH BLADES SET NEARLY STRAIGHT CAN BE USED AS AN ANCHORING TOOL.

MAINTENANCE
REFERTILIZE IF GROWTH IS NOT FULLY ADEQUATE. RESEED, FERTILIZE AND MULCH IMMEDIATELY FOLLOWING EROSION OR OTHER DAMAGE.

TEMPORARY SEEDING SCHEDULE - FALL

SEEDING MIXTURE

SPECIES	RATE (LB/ACRE)
RYE (GRAIN)	120

SEEDING DATES
MOUNTAINS - AUG. 15-DEC. 15
COASTAL PLAIN AND PIEDMONT - AUG. 15-DEC. 30

SOIL AMENDMENTS
FOLLOW SOIL TESTS OR APPLY 2,000 LB/ACRE GROUND AGRICULTURAL LIMESTONE AND 1,000 LB/ACRE 10-10-10 FERTILIZER.

MULCH
APPLY 4,000 LB/ACRE STRAW. ANCHOR STRAW BY TACKING WITH ASPHALT, NETTING OR A MULCH ANCHORING TOOL. A DISK WITH BLADES SET NEARLY STRAIGHT CAN BE USED AS A MULCH ANCHORING TOOL.

MAINTENANCE
REPAIR AND REFERTILIZE DAMAGED AREAS IMMEDIATELY. TOPDRESS WITH 50 LB/ACRE OF NITROGEN IN MARCH. IF IT IS NECESSARY TO EXTEND TEMPORARY COVER BEYOND JUNE 15, OVERSEED WITH 50 LB/ACRE KOBE (PIEDMONT AND COASTAL PLAIN) OR KOREAN (MOUNTAINS) LESPEDEZA IN LATE FEBRUARY OR EARLY MARCH.

PERMANENT SEEDING - GRASS-LINED CHANNELS

SEEDING MIXTURE

SPECIES	RATE (LB/ACRE)
TALL FESCUE	175-200 (3 LB/1000 SQ. FT.)
KENTUCKY BLUEGRASS	20 (1 LB/1000 SQ. FT.)

NURSE PLANTS
BETWEEN MAY 1 AND AUG. 15, ADD 10 LB/ACRE GERMAN MILLET OR 15 LB/ACRE SUDANGRASS. PRIOR TO MAY 1 OR AFTER AUG. 15, ADD 40 LB/ACRE RYE (GRAIN).

SEEDING DATES

	BEST	POSSIBLE
BELOW 2500 FT:	AUG. 15-SEPT. 1 MAR. 1-APR. 1	JULY 25-SEPT. 15 MAR. 1-MAY 10
ABOVE 2500 FT:	JULY 25-AUG. 15 MAR. 20-APR. 20	JULY 15-AUG. 30 MAR. 5-MAY 15

SOIL AMENDMENTS
APPLY LIME AND FERTILIZER ACCORDING TO SOIL TESTS, OR APPLY 4,000 LB/ACRE GROUND AGRICULTURAL LIMESTONE AND 1,200 LB/ACRE 10-10-10 FERTILIZER.

MULCH
USE JUTE, EXCELSIOR MATTING, OR A SIMILAR CHANNEL LINING MATERIAL TO COVER THE BOTTOM OF CHANNELS AND DITCHES. THE LINING SHOULD EXTEND ABOVE THE HIGHEST CALCULATED DEPTH OF FLOW. ON CHANNEL SIDE SLOPES ABOVE THIS HEIGHT, AND IN DRAINAGES NOT REQUIRING TEMPORARY LININGS, APPLY 4,000 LB/ACRE GRAIN STRAW AND ANCHOR STRAW BY STAPLING NETTING OVER THE TOP.

MULCH AND ANCHORING MATERIALS MUST NOT BE ALLOWED TO WASH DOWNSLOPE WHERE THEY CAN CLOG DRAINAGE DEVICES.

MAINTENANCE
INSPECT AND REPAIR MULCH FREQUENTLY. REFERTILIZE IN LATE WINTER ACCORDING TO SOIL TESTS OR APPLY 150 LB/ACRE 10-10-10 FERTILIZER (3 LB/1000 SQ. FT.). MOW REGULARLY TO A HEIGHT OF 2-4 INCHES.

PERMANENT SEEDING SCHEDULE-MIXTURE #1M

SEEDING MIXTURE

SPECIES	RATE (LB/ACRE)
TALL FESCUE	100
SERICEA LESPEDEZA	20
KOREAN LESPEDEZA	10
REDTOP	5
KENTUCKY BLUEGRASS	5

SEEDING NOTE
AFTER AUG. 1, USE UNSCARIFIED SEED FOR SERICEA LESPEDEZA.

NURSE PLANTS
BETWEEN MAY 1 AND AUG. 15 ADD 10 LB/ACRE GERMAN MILLET OR 15 LB/ACRE SUDANGRASS. PRIOR TO MAY 1 OR AFTER AUG. 15, ADD 40 LB/ACRE RYE (GRAIN). IT MAY BE BENEFICIAL TO PLANT THE GRASSES IN LATE SUMMER AND OVERSEED THE LESPEDEZAS IN MARCH.

SEEDING DATES

	BEST	POSSIBLE
BELOW 2500 FT:	AUG. 15-SEPT. 1 MAR. 1-APR. 1	JULY 25-SEPT. 15 MAR. 1-MAY 10
ABOVE 2500 FT:	JULY 25-AUG. 15 MAR. 20-APR. 20	JULY 15-AUG. 30 MAR. 5-MAY 15

COMPLETE SEEDING EARLIER IN THE FALL, AND START LATER IN SPRING ON NORTH AND EAST FACING SLOPES.

SOIL AMENDMENTS
APPLY LIME AND FERTILIZER ACCORDING TO SOIL TESTS, OR APPLY 4,000 LB/ACRE GROUND AGRICULTURAL LIMESTONE AND 1,000 LB/ACRE 5-10-10 FERTILIZER.

MULCH
APPLY 4,000-5,000 LB/ACRE GRAIN STRAW OR EQUIVALENT COVER OF ANOTHER SUITABLE MULCHING MATERIAL. ANCHOR MULCH BY TACKING WITH ASPHALT, ROVING OR NETTING. NETTING IS THE PREFERRED ANCHORING METHOD ON STEEP SLOPES.

MAINTENANCE
MOW NO MORE THAN ONCE A YEAR. REFERTILIZE IN THE SECOND YEAR UNLESS GROWTH IS FULLY ADEQUATE. RESEED, FERTILIZE AND MULCH DAMAGED AREAS IMMEDIATELY.

1. GROUND COVER - WHEREVER LAND DISTURBING ACTIVITY IS UNDERTAKEN ON A TRACT COMPRISING MORE THAN ONE (1) ACRE, A GROUND COVER SUFFICIENT TO RESTRAIN EROSION MUST BE PLANTED OR PROVIDED PER THE GROUND COVER SCHEDULE SHOWN ON THIS SHEET.
2. GRADED SLOPES AND FILLS - PER THE GROUND COVER SCHEDULE SHOWN HERE, OR AT THE COMPLETION OF ANY PHASE OF GRADING, WHICHEVER PERIOD IS SHORTER, SLOPES SHALL BE PLANTED OR OTHERWISE PROVIDED WITH GROUND COVER, DEVICES, OR STRUCTURES SUFFICIENT TO RESTRAIN EROSION.

GROUND COVER SCHEDULE

SITE AREA DESCRIPTION	STABILIZATION TIME FRAME	STABILIZATION TIME FRAME EXCEPTIONS
PERIMETER DIKES, SWALES, DITCHES AND SLOPES	7 DAYS	NONE
HIGH QUALITY WATER (HQW) ZONES	7 DAYS	NONE
SLOPES STEEPER THAN 3:1	7 DAYS	IF SLOPES ARE 10' OR LESS IN LENGTH AND ARE NOT STEEPER THAN 2:1, 14 DAYS ARE ALLOWED
SLOPES 3:1 OR FLATTER	14 DAYS	7 DAYS FOR SLOPES GREATER THAN 50 FEET IN LENGTH
ALL OTHER AREAS WITH SLOPES FLATTER THAN 4:1	14 DAYS	NONE (EXCEPT FOR PERIMETERS AND HWQ ZONES)

3. PER THE GROUND COVER SCHEDULE SHOWN HERE, OR AT THE COMPLETION OF ANY PHASE OF GRADING, WHICHEVER PERIOD IS SHORTER, DISTURBED AREAS SHALL BE PLANTED OR OTHERWISE PROVIDED WITH GROUND COVER, DEVICES, OR STRUCTURES SUFFICIENT TO RESTRAIN EROSION.

FINAL DRAWINGS - NOT RELEASED FOR CONSTRUCTION

WK DICKSON
community infrastructure consultants
616 COLONNADE DRIVE
CHARLOTTE, NC 28205
(t)704-334-5348
(f)704-334-0078
WWW.WKDICKSON.COM
NC LICENSE NO.F-0374

NORTH CAROLINA PROFESSIONAL ENGINEER SEAL 8802 CHARLES R. FRONEBERGER 11-5-18
PROFESSIONAL SEAL

REVISION RECORD

NO.	DATE	DESCRIPTION	BY

PROJECT NAME: KILLIAN CREEK WWTP PHASE 3 UPGRADE

DRAWING TITLE: EROSION CONTROL NOTES

PROJ. MGR.:	CRF
DESIGN BY:	CRF
DRAWN BY:	NS/CH
PROJ. DATE:	SEPT. 2018

DRAWING NUMBER:
C.14 OF 168
WKD PROJ. NO.:
20170294.00.CL

FILE PATH:L:\Projects\LINCL\20170294OOCL - Killian Creek WWTP Ph 3 Upgrade Const\CADD\Plan Set\20170294_C_SHT_Notes.dwg, CHEATH, 11/7/2018 2:11:37 PM

COPYRIGHT © WK DICKSON & CO., INC., ALL RIGHTS RESERVED. REPRODUCTION OF USE OF THE CONTENTS OF THIS DOCUMENT, ADVERTISE OR PUBLISH THE CONTENTS OF THIS DOCUMENT WITHOUT THE WRITTEN CONSENT OF WK DICKSON & CO., INC. IS PROHIBITED. FROM THE ORIGINAL OF THIS DOCUMENT MARKED WITH AN ORIGINAL SIGNATURE AND SEAL SHALL BE CONSIDERED TO BE VALID. TRUE COPIES.

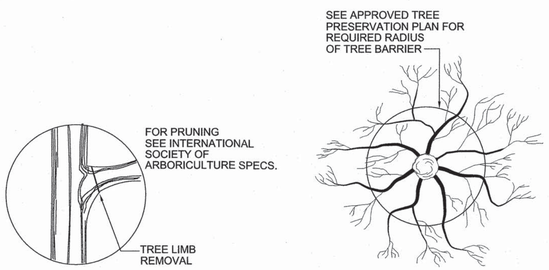

PLAN VIEW OF ROOT ZONE

NOTES:
1. REMOVE ALL BARRIERS UPON COMPLETION OF PROJECT.
2. LANDSCAPING PLANS SHALL SHOW THE LOCATIONS OF ALL TREE PROTECTION FENCES.
3. REFER TO CITY OF CHARLOTTE LANDSCAPE CONSTRUCTION STANDARDS SECTION 01000 FOR GENERAL SPECIFICATION REGARDING TREE PROTECTION.

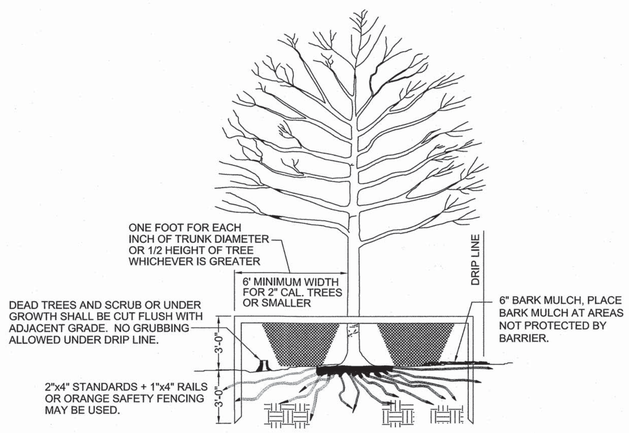

TREE PROTECTION DETAIL
NOT TO SCALE

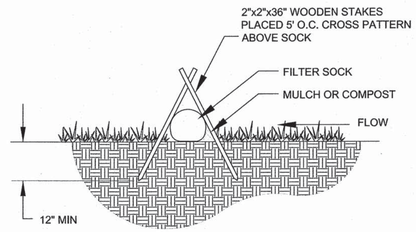

SOCK STAKING
NOT TO SCALE

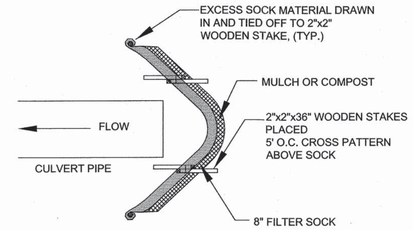

CULVERT INLET- PLAN

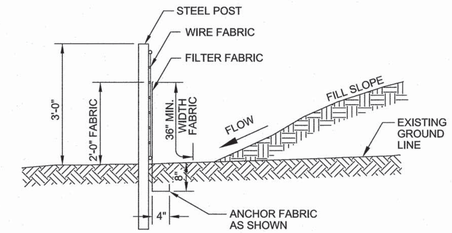

SECTION

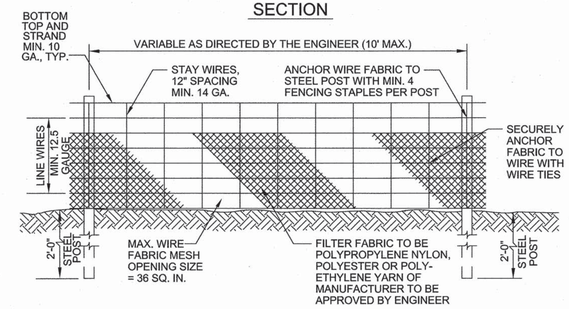

ELEVATION

NOTES:
1. THE CONTRACTOR SHALL MAINTAIN ALL SILT FENCING BY REMOVING AND DISPOSING OF SILT ACCUMULATIONS AS DIRECTED BY THE ENGINEER. FILTER FABRIC SHALL BE REPLACED WHEN IT HAS DETERIORATED TO SUCH EXTENT THAT IT REDUCES THE EFFECTIVENESS OF THE SILT FENCE.

2. FILTER FABRIC SHALL HAVE A MINIMUM TENSILE STRENGTH (@ 20% MAX. ELONGATION) OF 30lbs/LIN. IN., WIRE FABRIC REQUIRED.

3. IF EXTRA STRENGTH FABRIC IS UTILIZED (MIN. TENSILE STRENGTH = 50 lbs/LIN. IN. @ MAX. 20% ELONGATION), WIRE FABRIC IS OPTIONAL, MAXIMUM POST SPACING = 6 FEET.

4. POSTS SHALL BE 1.33 lb/LF STEEL UNLESS OTHERWISE APPROVED BY ENGINEER.

TEMPORARY SILT FENCE
NOT TO SCALE

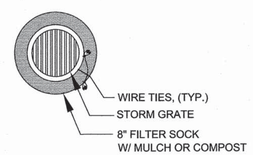

DRAIN INLET- PLAN

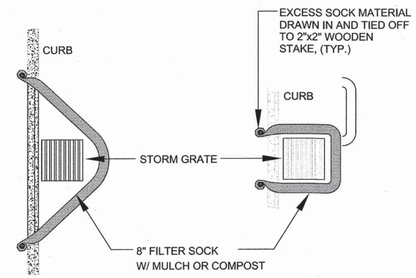

OPTION "A" PLAN

OPTION "B" PLAN

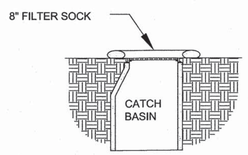

DRAIN INLET- SECTION

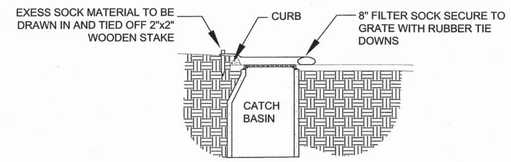

CURBSIDE SECTION

NOTES:
1. ALL MATERIAL TO MEET SPECIFICATIONS.
2. FILTER MEDIA FILL TO MEET APPLICATIONS REQUIREMENTS.
3. COMPOST MATERIAL TO BE DISPERSED ON SITE, AS DETERMINED BY ENGINEER.

INLET PROTECTION
NOT TO SCALE

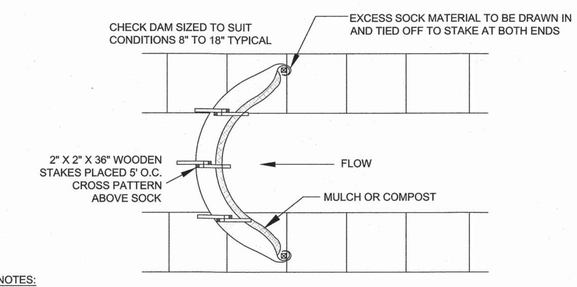

NOTES:

1. ALL MATERIAL TO MEET SPECIFICATIONS.
2. INSTALL SEDIMENT TUBES BY LAYING THEM FLAT ON THE GROUND. EXCESS MULCH CAN BE PLACED AT THE UPSTREAM SEDIMENT TUBE SOIL INTERFACE.
3. INSTALL SEDIMENT TUBES SO NO GAPS EXIST BETWEEN THE SOIL AND THE BOTTOM OF THE SEDIMENT TUBES. LAP THE ENDS OF ADJACENT SEDIMENT TUBES A MINIMUM OF 2 FEET TO PREVENT FLOW AND SEDIMENT FROM PASSING THROUGH THE FIELD JOINT.
4. INSTALL ENDS OF CHECK DAM POINTING SLIGHTLY UP THE SLOPE TO PREVENT RUNOFF FROM FLOWING AROUND THE FILTER SOCK.
5. INSTALL SEDIMENT TUBES IN SWALES OR DRAINAGE DITCHES PERPENDICULAR TO THE WATER FLOW AND EXTEND THEM UP THE SIDE SLOPES A MINIMUM OF 1-FOOT ABOVE THE DESIGN FLOW DEPTH.
6. CHECK DAM SHOULD BE INSTALLED AT LOCATIONS INDICATED ON DRAWINGS.
7. SEDIMENT SHOULD BE REMOVED FROM BEHIND CHECK DAM ONCE THE ACCUMULATED HEIGHT HAS REACHED 1/2 THE HEIGHT OF THE CHECK DAM.
8. LOOSE FILTER MEDIA MAY BE BACKFILLED ON THE UPSLOPE SIDE OF THE SOCK TO ENHANCE PERFORMANCE.
9. CHECK DAM CAN BE DIRECT SEEDED AT THE TIME OF INSTALLATION.

FILTER SOCK CHECK DAM
NOT TO SCALE

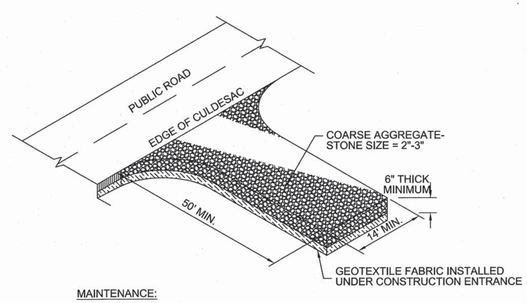

MAINTENANCE:

MAINTAIN THE GRAVEL PAD IN A CONDITION TO PREVENT MUD OR SEDIMENT FROM LEAVING THE CONSTRUCTION SITE. THIS MAY REQUIRE PERIODIC TOP DRESSING WITH 2-INCH STONE. AFTER EACH RAINFALL, INSPECT ANY STRUCTURE USED TO TRAP SEDIMENT AND CLEAN IT OUT AS NECESSARY. IMMEDIATELY REMOVE ALL OBJECTIONABLE MATERIALS SPILLED, WASHED, OR TRACKED ONTO PUBLIC ROADWAYS.

TEMPORARY GRAVEL CONSTRUCTION ENTRANCE
NOT TO SCALE

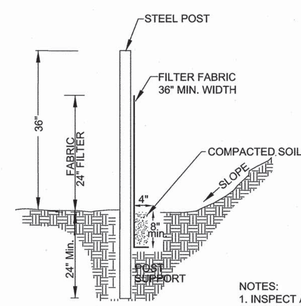

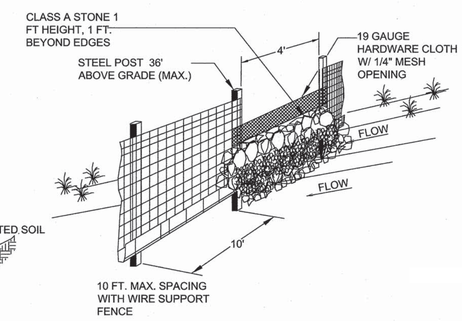

NOTES:
1. INSPECT AND REPAIR FENCE WEEKLY AND AFTER EACH SIGNIFICANT RAINFALL EVENT AND REMOVE SEDIMENT WHEN DEPOSITS REACH 6".

2. REMOVED SEDIMENT SHALL BE DEPOSITED TO AN AREA THAT WILL NOT CONTRIBUTE SEDIMENT OFF-SITE AND CAN BE PERMANENTLY STABILIZED.

3. SILT FENCE SHALL BE PLACED ON SLOPE CONTOURS TO MAXIMIZE PONDING EFFICIENCY.

SILT FENCE - WIRE & STONE REINFORCED OUTLET
NOT TO SCALE

WK DICKSON
community infrastructure consultants
616 COLONNADE DRIVE
CHARLOTTE, NC 28205
(t)704-334-5348
(f)704-334-0078
WWW.WKDICKSON.COM
NC LICENSE NO.F-0374

NORTH CAROLINA PROFESSIONAL SEAL 8802 ENGINEER CHARLES B. FRONABERGER

PROFESSIONAL SEAL

REVISION RECORD

NO.	DATE	DESCRIPTION	BY

FINAL DRAWINGS - NOT RELEASED FOR CONSTRUCTION

PROJECT NAME: KILLIAN CREEK WWTP PHASE 3 UPGRADE

DRAWING TITLE: EROSION CONTROL DETAILS

PROJ. MGR.:	CRF
DESIGN BY:	CRF
DRAWN BY:	NS/CH
PROJ. DATE:	SEPT. 2018

DRAWING NUMBER:
C.15 OF 168

WKD PROJ. NO.:
20170294.00.CL

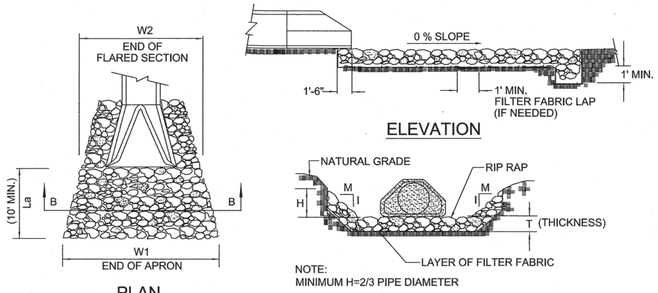

PLAN

ELEVATION

SECTION B-B

RIPRAP APRON
NOT TO SCALE

NOTES:

1. CLASS OR MEDIAN SIZE OF RIPRAP AND LENGTH, WIDTH AND DEPTH OF APRON TO BE DESIGNED BY THE ENGINEER.
2. REFER TO THE CHARLOTTE MECKLENBURG STORM WATER DESIGN MANUAL FOR RIPRAP APRON DESIGN STANDARDS.
3. RIPRAP SHOULD EXTEND UP BOTH SIDES OF THE APRON AND AROUND THE END OF THE PIPE OR CULVERT AT THE DISCHARGE OUTLET AT A MAXIMUM SLOPE OF 2:1 AND A HEIGHT NOT LESS THAN TWO THIRDS THE PIPE DIAMETER OR CULVERT HEIGHT.
4. THERE SHALL BE NO OVERFLOW FROM THE END OF THE APRON TO THE SURFACE OF THE RECEIVING CHANNEL. THE AREA TO BE PAVED OR RIPRAPPED SHALL BE UNDERCUT SO THAT THE INVERT OF THE APRON SHALL BE AT THE SAME GRADE (FLUSH) WITH THE SURFACE OF THE RECEIVING CHANNEL. THE APRON SHALL HAVE A CUTOFF OR TOE WALL AT THE DOWNSTREAM END.
5. THE WIDTH OF THE END OF THE APRON SHALL BE EQUAL TO THE BOTTOM WIDTH OF THE RECEIVING CHANNEL. MAXIMUM TAPER TO RECEIVING CHANNEL 5:1.
6. ALL SUBGRADE FOR STRUCTURE TO BE COMPACTED TO 95% OR GREATER.
7. THE PLACING OF FILL, EITHER LOOSE OR COMPACTED IN THE RECEIVING CHANNEL SHALL NOT BE ALLOWED.
8. NO BENDS OR CURVES IN THE HORIZONTAL ALIGNMENT OF THE APRON WILL BE PERMITTED.
9. FILTER FABRIC SHALL BE INSTALLED ON COMPACTED SUBGRADE PRIOR TO PLACEMENT OF RIP RAP.
10. ANY DISTURBED AREA FROM END OF APRON TO RECIEVING CHANNEL MUST BE STABILIZED.

RIP RAP SUMMARY CHART					
OUTLET	La	W1	W2	T*	H
FES-1	12	6	14	1.13	2
OUTLET-11	8	2	9	0.75	0.5
FES-13	12	6	14	1.13	2

*d50 (see fig 8.06 a&b "NC SEDIMENT AND EROSION CONTROL MANUAL"
dmax = 1.5 x d50
T = 1.5 X dmax.

MAINTENANCE NOTE:
INSPECT BAFFLES AT LEAST ONCE A WEEK AND AFTER EACH RAINFALL. MAKE ANY REQUIRED REPAIRS IMMEDIATELY.

BE SURE TO MAINTAIN ACCESS TO THE BAFFLES. SHOULD THE FABRIC OF A BAFFLE COLLAPSE, TEAR, DECOMPOSE, OR BECOME INEFFECTIVE, REPLACE IT PROMPTLY.

REMOVE SEDIMENT DEPOSITS WHEN IT REACHES HALF FULL TO PROVIDE ADEQUATE STORAGE VOLUME FOR THE NEXT RAIN AND TO REDUCE PRESSURE ON THE BAFFLES. TAKE CARE TO AVOID DAMAGING THE BAFFLES DURING CLEANOUT. SEDIMENT DEPTH SHOULD NEVER EXCEED HALF THE DESIGNED STORAGE DEPTH.

AFTER THE CONTRIBUTING DRAINAGE AREA HAS BEEN PROPERLY STABILIZED, REMOVE ALL BAFFLE MATERIALS AND UNSTABLE SEDIMENT DEPOSITS, BRING THE AREA TO GRADE, AND STABILIZE IT.

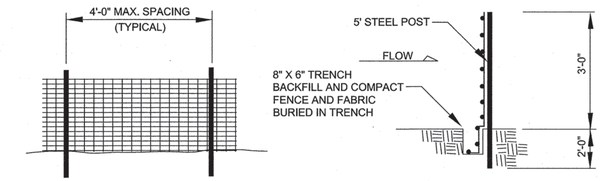

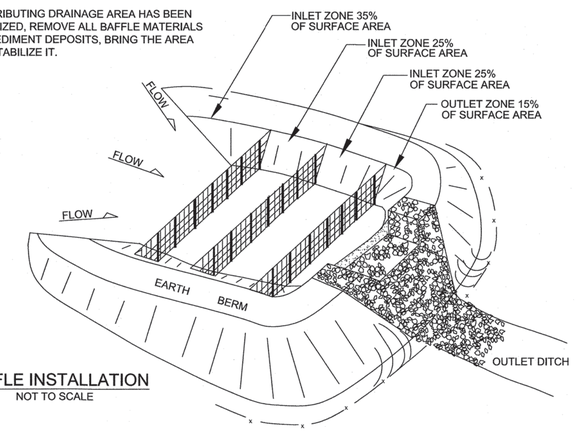

BAFFLE INSTALLATION
NOT TO SCALE

GENERAL NOTES:

1. DRIVE 5' STEEL POST AT LEAST 24" INTO SOLID GROUND.
2. USE STAPLES 1' APART HORIZONTALLY AND VERTICALLY TO ATTACH THE FILTER FABRIC TO THE WIRE FENCE.
3. MINIMUM BAFFLE SPACING IS 10'.
4. THE FLOOR OF THE BASIN IN THE OUTLET ZONE AND BERMS SHOULD BE SEEDED IMMEDIATELY AFTER THE BASIN IS CONSTRUCTED.
5. REFER TO NCESCPDM SECTION #6.65 FOR ADDITIONAL SPECIFICATIONS.
6. BAFFLES TO BE CONSTRUCTED WITH COIR FABRIC OR OTHER APPROVED POROUS FABRIC.

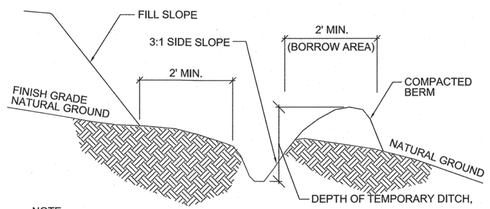

NOTE:
1. DITCH SHOULD HAVE MINIMUM LONGITUDINAL SLOPE OF 1.0%.
2. SILT FENCE MAY BE REQUIRED BEHIND BERM.
3. STABILIZE, SEED, MULCH, AND MATTED IMMEDIATELY AFTER CONSTRUCTION.

MAINTENANCE NOTE:
INSPECT TEMPORARY DIVERSIONS ONCE A WEEK AND AFTER EVERY RAINFALL. IMMEDIATELY REMOVE SEDIMENT FROM THE FLOW AREA AND REPAIR THE DIVERSION RIDGE. CAREFULLY CHECK OUTLETS AND MAKE TIMELY REPAIRS AS NEEDED. WHEN THE AREA PROTECTED IS PERMANENTLY STABILIZED, REMOVE THE RIDGE AND THE CHANNEL TO BLEND WITH THE NATURAL GROUND LEVEL AND APPROPRIATELY STABILIZE IT.

DITCH NO.	DEPTH (FT)	BOTTOM WIDTH (FT)	TOP WIDTH (FT)	SIDE SLOPE (H:V)	CHANNEL LINING TYPE	CHECK DAM SPACING (FT)
TDD #1-PHASE 1	2.00	2.00	10.00	2:1	STRAW W/ NET	202
EXIST. SWALE	2.00	0.50	8.50	2:1	SYNTHETIC MAT	38

TEMPORARY DIVERSION DITCH
NOT TO SCALE

DATA BLOCK

BASIN	DRAINAGE AREA (ACRES)	DENUDED AREA (ACRES)	Q_{10} CFS	BASIN VOLUME REQUIRED (CUBIC FT.)	BASIN VOLUME PROVIDED (CUBIC FT.)	BASIN SURFACE AREA REQUIRED (SQ FT.)	BASIN SURFACE AREA PROVIDED (SQ FT.)	CLEANOUT DEPTH (FT.) H/2	H (FEET)	Z (FEET)	L (FEET)	T (FEET)	W (FEET)	SKIMMER PIPE DIAMETER	SKIMMER ORIFICE DIAMETER	SKIMMER INVERT
PHASE 1	12.00	6.00	31	21,600	38,679	13,485	21,313	1.75	3.5	5	15	1.5	10	4.0 (IN)	2.5 (IN)	657
PHASE 2	11.12	6.00	29	20,016	38,679	12,615	21,313	1.75	3.5	5	15	1.5	10	4.0 (IN)	2.5 (IN)	657

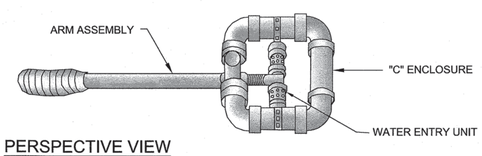

PERSPECTIVE VIEW

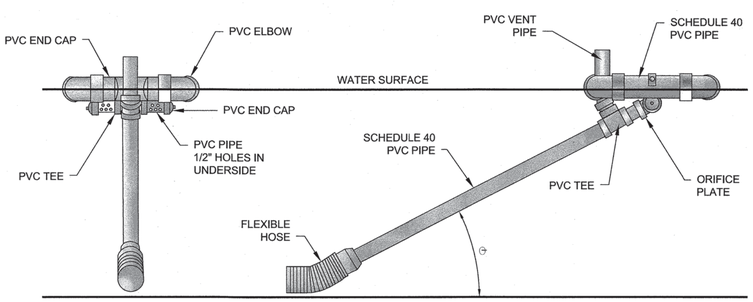

END VIEW

FRONT VIEW

SCHEMATIC OF SKIMMER TAKEN FROM PENNSYLVANIA EROSION AND SEDIMENT POLLUTION CONTROL MANUAL, MARCH 2000.

NOTE:
CONTRACTOR SHALL USE JW FAIRCLOTH SKIMMER

SKIMMER DETAIL
NOT TO SCALE

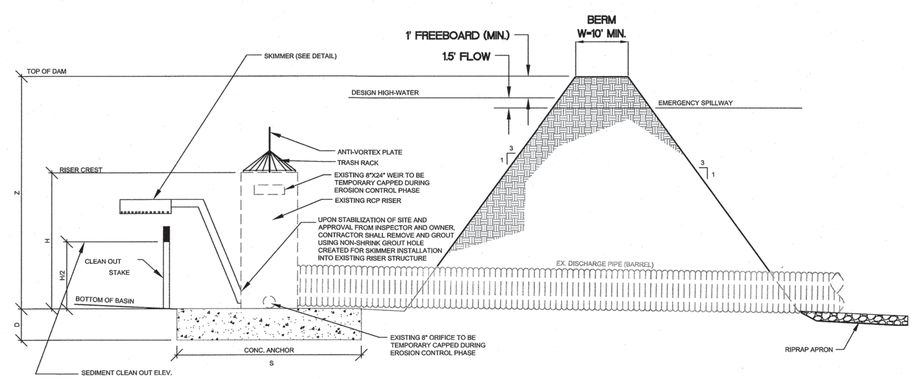

RISER SEDIMENT BASIN
NOT TO SCALE

WK DICKSON
community infrastructure consultants
616 COLONNADE DRIVE
CHARLOTTE, NC 28205
(t)704-334-5348
(f)704-334-0078
WWW.WKDICKSON.COM
NC LICENSE NO.F-0374

NORTH CAROLINA PROFESSIONAL ENGINEER SEAL 8802 CHARLES R. FRONEBERGER

PROFESSIONAL SEAL

REVISION RECORD		
NO.	DATE	DESCRIPTION	BY

FINAL DRAWINGS - NOT RELEASED FOR CONSTRUCTION

PROJECT NAME: KILLIAN CREEK WWTP PHASE 3 UPGRADE

DRAWING TITLE: EROSION CONTROL DETAILS

PROJ. MGR.:	CRF
DESIGN BY:	CRF
DRAWN BY:	NS/CH
PROJ. DATE:	SEPT. 2018

DRAWING NUMBER:
C.16 OF 168
WKD PROJ. NO.:
20170294.00.CL

COPYRIGHT © WK DICKSON & CO. INC. ALL RIGHTS RESERVED. REPRODUCTION BY USE OF THIS CONTENT OF THE DOCUMENT, IN WHOLE OR IN PART, WITHOUT THE EXPRESS WRITTEN CONSENT OF WK DICKSON & CO. INC. IS PROHIBITED. ADDITIONS OR DELETIONS TO THE ORIGINAL OF THIS DOCUMENT, MARKED WITH WK DICKSON, SIGNATURE AND SEAL SHALL BE CONSIDERED TO BE VALID. TRUE COPIES.

FILE:P:\Projects\JACL\20170294\00CL - Killian Creek WWTP Ph 3 Upgrade Const\CADD\Plan Set\20170294_C_GRP_Details Site.dwg, BENDREWO, 11/7/2018 2:11:58 PM

COPYRIGHT © 1-NO DICKSON & CO. INC. ALL RIGHTS RESERVED. REPRODUCTION OR USE OF THE CONTENTS OF THIS DOCUMENT, ADVERSE OR PREJUDICIAL TO THE INTERESTS OF WK DICKSON & CO. INC. IN ANY FORM WITHOUT WRITTEN PERMISSION IS PROHIBITED. ACCEPTANCE OF THIS DOCUMENT IMPLIES THE ORIGINAL OF THIS DOCUMENT, MARKED WITH AN ORIGINAL SIGNATURE AND SEAL SHALL BE CONSIDERED TO BE VALID, TRUE COPIES.

GENERAL NOTES:

1. GRAVEL AND RIP RAP FILTER BERM BASIN SHOULD BE USED TO PROTECT PIPE INVERTS THAT DRAIN 10 ACRES OR LESS.
2. DIMENSIONS SHOWN ARE THE MINIMUM ACCEPTED UNLESS OTHERWISE NOTED.
3. IN LIEU OF RING FILTER, THE OUTLET PIPE MAY BE COVERED WITH HARDWARE CLOTH, RIP RAP AND WASHED STONE WHERE A SPILLWAY IS NOT REQUIRED.

MAINTENANCE NOTES:

INSPECT ROCK PIPE INLET PROTECTION AT LEAST WEEKLY AND AFTER EACH SIGNIFICANT (1/2 INCH OR GREATER) RAINFALL EVENT AND REPAIR IMMEDIATELY. REMOVE SEDIMENT AND RESTORE THE SEDIMENT STORAGE AREA TO ITS ORIGINAL DIMENSIONS WHEN THE SEDIMENT HAS ACCUMULATED TO ONE-HALF THE DESIGN DEPTH OF THE TRAP. PLACE THE SEDIMENT THAT IS REMOVED IN THE DESIGNATED DISPOSAL AREA AND REPLACE THE CONTAMINATED PART OF THE GRAVEL FACING.

CHECK THE STRUCTURE FOR DAMAGE. ANY RIPRAP DISPLACED FROM THE STONE HORSESHOE MUST BE REPLACED IMMEDIATELY.

AFTER ALL THE SEDIMENT PRODUCING AREAS HAVE BEEN PERMANENTLY STABILIZED, REMOVE THE STRUCTURE AND ALL THE UNSTABLE SEDIMENT. SMOOTH THE AREA TO BLEND WITH THE ADJOINING AREAS AND PROVIDE PERMANENT GROUND COVER.

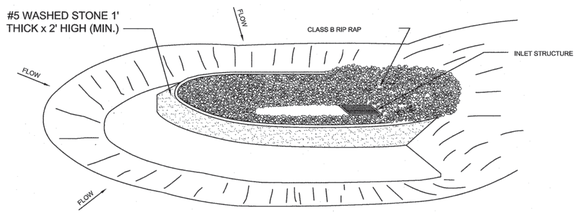

PERSPECTIVE VIEW

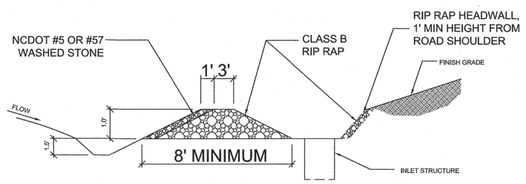

SECTION

ROCK INLET PROTECTION

NOT TO SCALE

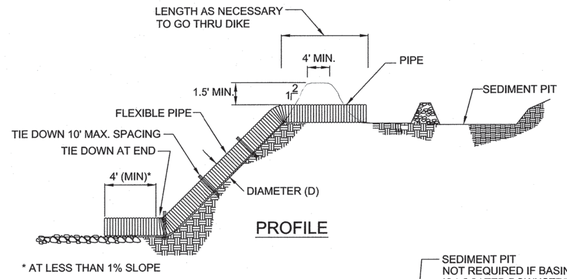

PROFILE

* AT LESS THAN 1% SLOPE

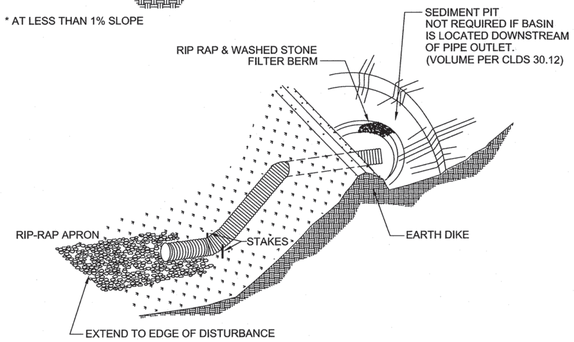

CONSTRUCTION SPECIFICATIONS:

1. THE TOP OF THE EARTH DIKE OVER THE INLET PIPE AND THOSE DIKES CARRYING WATER TO THE PIPE SHALL BE AT LEAST 1.5 FEET HIGHER AT ALL POINTS THAN THE TOP OF THE INLET PIPE.
2. THE PIPE SHALL BE FLEXIBLE WITH WATER TIGHT CONNECTING BANDS. FLEXIBLE PIPE SHOULD BE STAKED ON EITHER SIDE.
3. A RIP RAP APRON SHALL BE PROVIDED AT THE OUTLET, IF EMPTYING INTO A DISTURBED AREA.
4. THE SOIL AROUND AND UNDER THE INLET PIPE AND ENTRANCE SECTION SHALL BE HAND TAMPED IN 4" LIFTS TO THE TOP OF THE EARTH DIKE.
5. FOLLOW-UP INSPECTION AND ANY NEEDED MAINTENANCE SHALL BE PERFORMED AFTER EACH STORM BY THE FINANCIALLY RESPONSIBLE PARTY OR HIS AGENT.
6. OUTLET PIPE SHOULD BE TAKEN OVER OR THROUGH ANY SILT FENCE, TAKING CARE NOT TO VOID THE EFFECTIVENESS OF THE SILT FENCE.

FLEXIBLE PIPE SLOPE DRAIN

NOT TO SCALE

NOTES:

1. INLET MAINTENANCE SHALL BE DOCUMENTED IN PROJECT LOG BOOK.
2. FILTER TYPES SHALL BE APPROVED BY THE CITY INSPECTOR PRIOR TO INSTALLATION.
3. FILTER BAGS MAY BE REMOVED WHEN SITE IS STABILIZED AT THE DIRECTION OF THE ENGINEER.
4. FILTER BAGS SHALL BE REMOVED PRIOR TO STREET ACCEPTANCE.
5. FILTER BAGS SHALL BE CLEANED OR REPLACED EVERY 7 DAYS AND AFTER EVERY 0.5 RAINFALL (BAG SHALL NOT BE MORE THAN HALF FULL AT ANY TIME).
6. FILTER BAGS SHALL NOT BE ALLOWED IN EXISTING CITY OR NCDOT ROADS.

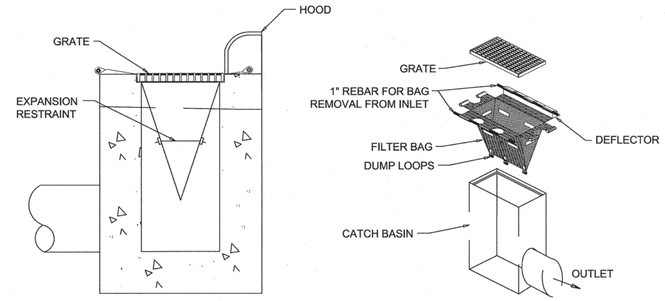

SECTION

INSTALLATION

SILT SACKS DETAIL

NOT TO SCALE

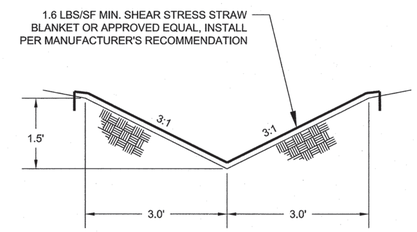

PERMANENT DITCH SECTION WITH MATTING

NOT TO SCALE

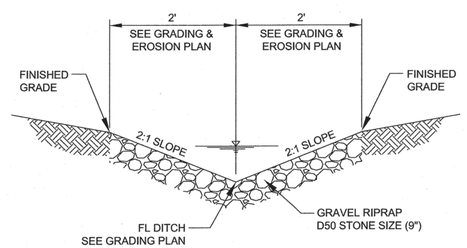

PERMANENT DITCH SECTION

NOT TO SCALE

ALTERNATIVE 1:

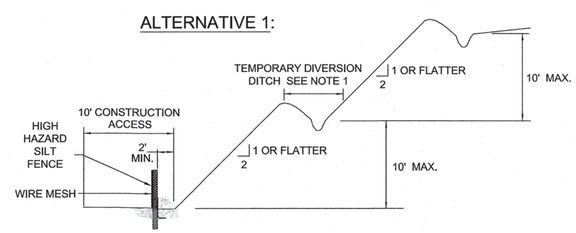

NOTES:

1. IF DIVERSION DITCH USED, IT SHOULD FLOW INTO SEDIMENT BASIN ROCK CHECK DAM, OR SLOPE DRAIN
2. BENCH SHOULD BE GRADED AT 0% LONGITUDINAL SLOPE (ON-CONTOUR)

ALTERNATIVE 2:

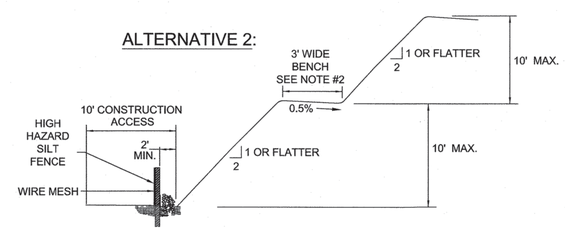

SLOPE STABILITY

NOT TO SCALE

WK DICKSON
community infrastructure consultants
616 COLONNADE DRIVE
CHARLOTTE, NC 28205
(t)704-334-5348
(f)704-334-0078
WWW.WKDICKSON.COM
NC LICENSE NO.F-0374

NORTH CAROLINA PROFESSIONAL SEAL 8802 ENGINEER CHARLES R. FRONHEISER

PROFESSIONAL SEAL

NO.	DATE	DESCRIPTION	BY

REVISION RECORD

- NOT RELEASED FOR CONSTRUCTION -

FINAL DRAWINGS -

PROJECT NAME: KILLIAN CREEK WWTP PHASE 3 UPGRADE

DRAWING TITLE: EROSION CONTROL DETAILS

PROJ. MGR.:	CRF
DESIGN BY:	CRF
DRAWN BY:	NS/CH
PROJ. DATE:	SEPT. 2018

DRAWING NUMBER:

C.17 OF 168

WKD PROJ. NO.:

20170294.00.CL

COPYRIGHT © WK DICKSON & CO., INC. ALL RIGHTS RESERVED. REPRODUCTION OR USE OF THIS DOCUMENT, IN WHOLE OR IN PART, WITHOUT WRITTEN CONSENT OF WK DICKSON & CO., INC. IS PROHIBITED. ALTERATIONS OR ADDITIONS TO THIS DOCUMENT, INCLUDING BUT NOT LIMITED TO ADDING SIGNATURES AND SEALS, SHALL BE CONSIDERED TO BE VALID. FREE COPIES OF THE ORIGINAL OF THIS DOCUMENT MARKED WITH AN ORIGINAL SIGNATURE AND SEAL SHALL BE CONSIDERED TO BE VALID. FREE COPIES.

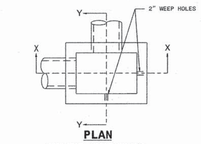

PLAN
WITH GRATE & FRAME REMOVED

GENERAL NOTES:
USE CLASS "B" CONCRETE THROUGHOUT.
PROVIDE ALL DROP INLETS OVER 3'-6" IN DEPTH WITH STEPS 12" ON CENTER. USE STEPS WHICH COMPLY WITH STD. DRAWING 840.66.
OPTIONAL CONSTRUCTION - MONOLITHIC POUR 2" KEYWAY OR #4 BAR DOWELS AT 12" CENTERS AS DIRECTED BY THE ENGINEER.
USE FORMS FOR THE CONSTRUCTION OF THE BOTTOM SLAB.
IF REINFORCED CONCRETE PIPE IS SET IN BOTTOM SLAB OF BOX, ADD TO SLAB AS SHOWN ON STD. NO. 840.00.
CONSTRUCT WITH PIPE CROWNS MATCHING.
SEE STANDARD DRAWING 840.25 FOR ATTACHMENT OF FRAMES AND GRATES NOT SHOWN.
INSTALL 2" WEEPHOLES AS DIRECTED BY THE ENGINEER.
INSTALL STONE DRAINS, OF A MINIMUM OF 1 CUBIC FOOT OF NO. 78M STONE IN A POROUS FABRIC BAG OR WRAP, AT EACH WEEP HOLE OR AS DIRECTED BY THE ENGINEER.
CHAMFER ALL EXPOSED CORNERS 1".
DRAWING NOT TO SCALE.

STATE OF NORTH CAROLINA DEPT. OF TRANSPORTATION DIVISION OF HIGHWAYS RALEIGH, N.C.

1-18

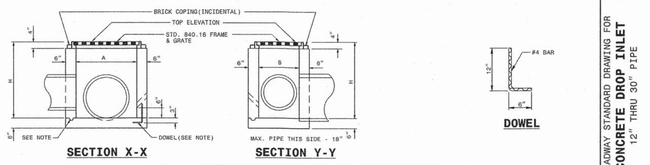

SECTION X-X **SECTION Y-Y** **DOWEL**

DIMENSIONS AND QUANTITIES FOR DROP INLET(BASED ON MIN. HEIGHT, H)									
DIMENSIONS OF BOX & PIPE				CUBIC YARDS CONC. IN BOX				DEDUCTIONS FOR ONE PIPE	
PIPE	SPAN	WIDTH	MIN. HEIGHT	BOTTOM SLAB	WALL PER FT. HT.	CONCRETE FOUNDATION EXCAVATION PER FOOT OF HEIGHT	C.M.	R.C.
D	A	B	H					
12"	3'-0"	3'-0"	2'-0"	0.222	0.222	0.592	0.015	0.026
15"	/	/	2'-3"	/	/	0.648	0.023	0.036
18"	/	/	2'-6"	/	/	0.703	0.033	0.049
24"	/	/	3'-0"	/	/	0.814	0.059	0.085
30"	3'-0"	2'-0"	3'-6"	0.222	0.222	0.925	0.092	0.127

ROADWAY STANDARD DRAWING FOR
CONCRETE DROP INLET
12" THRU 30" PIPE

SHEET 1 OF 1
840.14

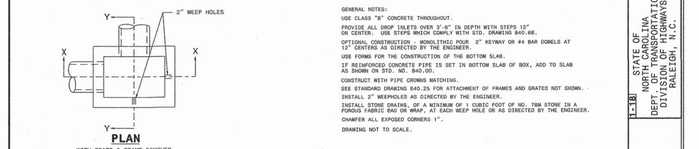

PLAN
WITH GRATE & FRAME REMOVED

GENERAL NOTES:
USE CLASS "B" CONCRETE THROUGHOUT.
PROVIDE ALL DROP INLETS OVER 3'-6" IN DEPTH WITH STEPS 12" ON CENTER. USE STEPS WHICH COMPLY WITH STD. DRAWING 840.66.
OPTIONAL CONSTRUCTION - MONOLITHIC POUR 2" KEYWAY OR #4 BAR DOWELS AT 12" CENTERS AS DIRECTED BY THE ENGINEER.
USE FORMS FOR THE CONSTRUCTION OF THE BOTTOM SLAB.
IF REINFORCED CONCRETE PIPE IS SET IN BOTTOM SLAB OF BOX, ADD TO SLAB AS SHOWN ON STD. NO. 840.00.
CONSTRUCT WITH PIPE CROWNS MATCHING.
SEE STANDARD DRAWING 840.25 FOR ATTACHMENT OF FRAMES AND GRATES NOT SHOWN.
INSTALL 2" WEEPHOLES AS DIRECTED BY THE ENGINEER.
INSTALL STONE DRAINS, OF A MINIMUM OF 1 CUBIC FOOT OF NO. 78M STONE IN A POROUS FABRIC BAG OR WRAP, AT EACH WEEP HOLE OR AS DIRECTED BY THE ENGINEER.
CHAMFER ALL EXPOSED CORNERS 1".
DRAWING NOT TO SCALE.

STATE OF NORTH CAROLINA DEPT. OF TRANSPORTATION DIVISION OF HIGHWAYS RALEIGH, N.C.

1-18

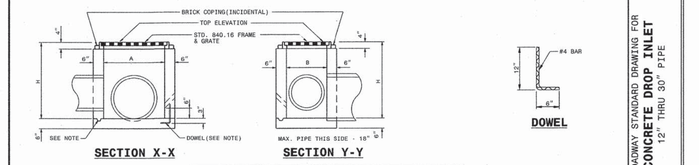

SECTION X-X **SECTION Y-Y** **DOWEL**

DIMENSIONS AND QUANTITIES FOR DROP INLET(BASED ON MIN. HEIGHT, H)									
DIMENSIONS OF BOX & PIPE				CUBIC YARDS CONC. IN BOX				DEDUCTIONS FOR ONE PIPE	
PIPE	SPAN	WIDTH	MIN. HEIGHT	BOTTOM SLAB	WALL PER FT. HT.	CONCRETE FOUNDATION EXCAVATION PER FOOT OF HEIGHT	C.M.	R.C.
D	A	B	H					
12"	3'-0"	3'-0"	2'-0"	0.222	0.222	0.592	0.015	0.026
15"	/	/	2'-3"	/	/	0.648	0.023	0.036
18"	/	/	2'-6"	/	/	0.703	0.033	0.049
24"	/	/	3'-0"	/	/	0.814	0.059	0.085
30"	3'-0"	2'-0"	3'-6"	0.222	0.222	0.925	0.092	0.127

ROADWAY STANDARD DRAWING FOR
CONCRETE DROP INLET
12" THRU 30" PIPE

SHEET 1 OF 1
840.14

GENERAL NOTES
USE 4000 PSI MINIMUM COMPRESSIVE STRENGTH CONCRETE.
USE ASTM A615 GRADE 60 REINFORCING STEEL. USE ASTM A1064 WELDED WIRE FABRIC (WWF).
FABRICATE, ASSEMBLE AND DESIGN PRECAST MANHOLE COMPONENTS ACCORDANCE WITH AASHTO M199.
ASSEMBLE RISER AND GRADE RINGS WITH THE STEPS SPACED 12" FROM THE TOP TO THE BOTTOM OF THE MANHOLE.
WHERE THE MANHOLE IS EXPOSED TO ROAD TRAFFIC, CONSTRUCT THE TOP OF THE MANHOLE FLUSH WITH THE GROUND AND A MINIMUM OF 9" ABOVE THE GROUND AT OTHER LOCATIONS.
LIMIT DEPTH OF FILL TO 30'-0" FROM FINISH GRADE TO TOP OF BOTTOM SLAB.
THE MIN. SLAB THICKNESS 'T' IS THE DIMENSION OF THE THINNEST PORTION OF THE TOP/BOTTOM SLAB.
* TOP MAT OF REINFORCEMENT MAY BE NEGLECTED IF TOP SLAB HAS A DISTINGUISHABLE TOP AND BOTTOM.

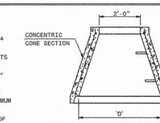

ALTERNATE CONE SECTION

D	W	T	As
INTERNAL DIAMETER (FT.)	MIN. WALL THICKNESS (IN.)	MIN. TOP/BOTTOM SLAB THICKNESS (IN.)	MIN. CIRCUMFERENTIAL AREA OF STEEL PER VERTICAL FT. (SQ. IN.)
4	4	6	0.12
5	5	8	0.15
6	6	8	0.18

STATE OF NORTH CAROLINA DEPT. OF TRANSPORTATION DIVISION OF HIGHWAYS RALEIGH, N.C.

1-18

FRAME AND GRATES	STD. NO.
TRAFFIC BEARING	840.37
NONTRAFFIC BEARING	840.32
	840.35
	840.20
	840.30
	840.39

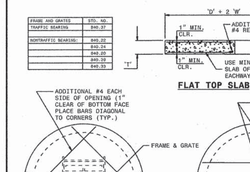

FLAT TOP SLAB

GRATED INLET OPTION

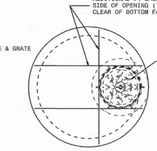

MANHOLE OPTION

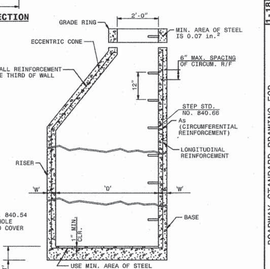

TYPICAL MANHOLE SECTION

ROADWAY STANDARD DRAWING FOR
PRECAST MANHOLE 4', 5' AND 6' DIAMETER
12" THRU 48" PIPE

SHEET 1 OF 1
840.52

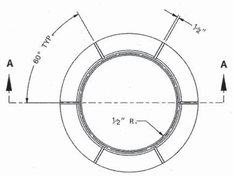

PLAN OF FRAME

SOLID COVER SHOWN PERFORATED. PERFORATED AVAILABLE IF SPECIFIED.
STATE USE OF SYSTEM ON COVER
(I.E.: SEWER, STORM DRAIN, ELECTRICAL)

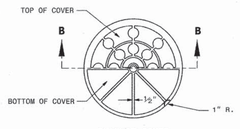

PLAN OF COVER

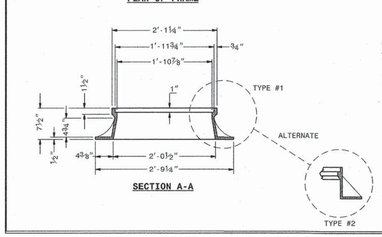

SECTION A-A

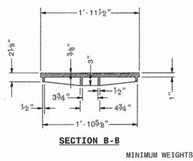

SECTION B-B

MINIMUM WEIGHTS - LBS.
FRAME - 180
COVER - 120
TOTAL - 300

ROADWAY STANDARD DRAWING FOR
MANHOLE FRAME AND COVER

SHEET 1 OF 1
840.54

STATE OF NORTH CAROLINA DEPT. OF TRANSPORTATION DIVISION OF HIGHWAYS RALEIGH, N.C.

1-18

NOTES:
INSTALL ALL STEPS PROTRUDING 4" FROM INSIDE FACE OF STRUCTURE WALL.
STEPS DIFFERING IN DIMENSIONS, CONFIGURATION, OR MATERIALS FROM THOSE SHOWN MAY ALSO BE USED PROVIDED THE CONTRACTOR HAS FURNISHED THE ENGINEER WITH DETAILS OF THE PROPOSED STEPS AND HAS RECEIVED WRITTEN APPROVAL FROM THE ENGINEER FOR THE USE OF SUCH STEPS.

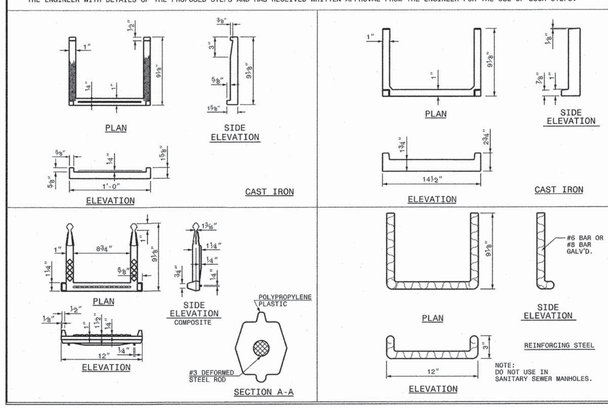

ROADWAY STANDARD DRAWING FOR
DRAINAGE STRUCTURE STEPS

SHEET 1 OF 1
840.66

STATE OF NORTH CAROLINA DEPT. OF TRANSPORTATION DIVISION OF HIGHWAYS RALEIGH, N.C.

1-18

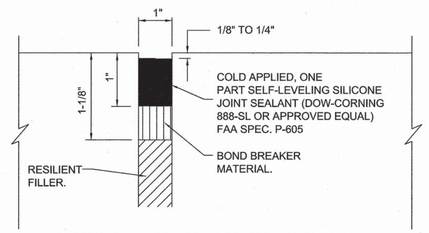

DETAIL SHALL APPLY TO ALL CONTROL JOINTS ("CJ") IN CONCRETE PAVING

CONTROL JOINT DETAIL
NOT TO SCALE

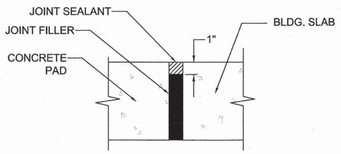

ISOLATION JOINT DETAIL
NOT TO SCALE

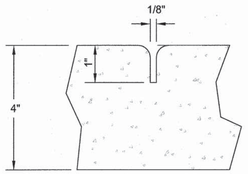

GROOVE JOINT IN SIDEWALK

GENERAL NOTES:

1. A GROOVE JOINT 1" DEEP WITH 1/8" RADII SHALL BE REQUIRED IN THE CONCRETE SIDEWALK AT 5' INTERVALS. ONE 1/2" EXPANSION JOINT WILL BE REQUIRED AT 45' INTERVALS NOT TO EXCEED 50' AND MATCHING EXPANSION/CONSTRUCTION JOINT IN ADJACENT CURB. A SEALED 1/2" EXPANSION JOINT WILL BE REQUIRED WHERE THE SIDEWALK JOINS ANY RIGID STRUCTURE.
2. SIDEWALK AT DRIVEWAY ENTRANCES TO BE 6" THICK.
3. WIDTH OF SIDEWALK ON THOROUGHFARE STREETS SHALL BE A MINIMUM OF 5'. WIDTH OF SIDEWALKS IN THE CENTRAL BUSINESS DISTRICT WILL BE DETERMINED BY THE CITY/COUNTY ENGINEER.
4. WIDTH OF SIDEWALKS SHALL BE A MINIMUM OF 4' OR AS SHOWN ON DRAWINGS.
5. SIDEWALK TO BE POURED TO END OF RADIUS AT INTERSECTING STREETS.
6. CONCRETE COMPRESSIVE STRENGTH SHALL BE 3600 PSI. IN 28 DAYS.

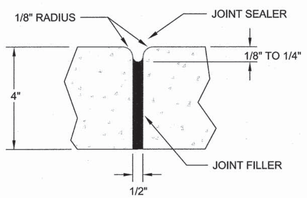

TRANSVERSE EXPANSION JOINT IN SIDEWALK

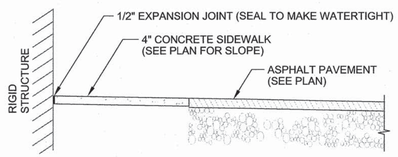

DETAILS SHOWING EXPANSION JOINTS IN CONCRETE SIDEWALK

CONCRETE SIDEWALK DETAIL
NOT TO SCALE

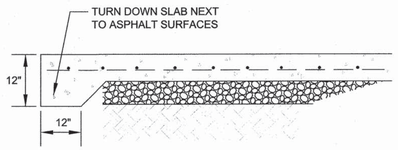

NOTE:
ALL JOINTS TO HAVE SEALANT APPLIED TO PROTECT JOINT FROM MOISTURE

TURN-DOWN CONCRETE PAVEMENT
NOT TO SCALE

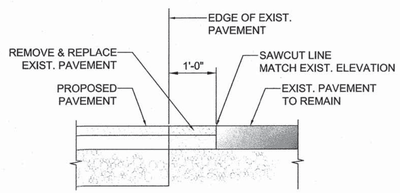

PAVEMENT DETAIL
NOT TO SCALE

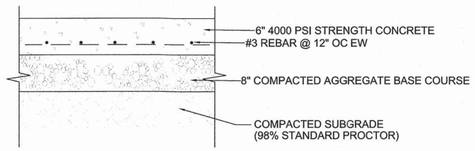

TYPICAL CONCRETE PAD (CP) SECTION
NOT TO SCALE

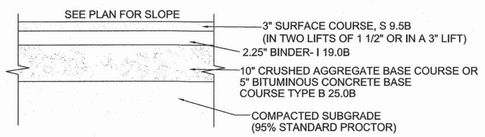

TYPICAL HEAVY DUTY (HD) PAVEMENT SECTION
NOT TO SCALE

WK DICKSON
community infrastructure consultants
616 COLONNADE DRIVE
CHARLOTTE, NC 28205
(t)704-334-5348
(f)704-334-0078
WWW.WKDICKSON.COM
NC LICENSE NO.F-0374

NORTH CAROLINA PROFESSIONAL SEAL 7892 ENGINEER CHARLES R. FRONSBERGER

PROFESSIONAL SEAL

REVISION RECORD			
NO.	DATE	DESCRIPTION	BY

FINAL DRAWINGS - NOT RELEASED FOR CONSTRUCTION

PROJECT NAME: KILLIAN CREEK WWTP PHASE 3 UPGRADE

DRAWING TITLE: MISCELLANEOUS DETAILS

PROJ. MGR.:	CRF
DESIGN BY:	CRF
DRAWN BY:	NS/CH
PROJ. DATE:	SEPT. 2018

DRAWING NUMBER:
C.18 OF 168
WKD PROJ. NO.:
20170294.00.CL

COPYRIGHT © 2018 DICKSON & CO., LLC. ALL RIGHTS RESERVED. REPRODUCTION IS SUBJECT TO THE EXCLUSIVE AUTHORITY OF THE DICKSON & CO., LLC. THIS DOCUMENT IS INTENDED ONLY FOR THE PERSON TO WHOM IT IS DELIVERED. YOU MAY NOT DISTRIBUTE, DISCLOSE, OR DISTRIBUTE THIS DOCUMENT TO ANYONE OTHER THAN THE PERSON TO WHOM IT IS DELIVERED WITHOUT THE WRITTEN CONSENT OF DICKSON & CO., LLC, AND YOU MAY NOT REPRODUCE, DISTRIBUTE, OR DISCLOSE THIS DOCUMENT IN WHOLE OR IN PART, WITHOUT WRITTEN CONSENT OF DICKSON & CO., LLC. THE PERSON TO WHOM THIS DOCUMENT IS DELIVERED MAY PRINT ONE COPY FOR ITS OWN USE. ANY OTHER USE, REPRODUCTION OR DISTRIBUTION IS STRICTLY PROHIBITED. ALL COPIES MUST CONTAIN THIS NOTICE.

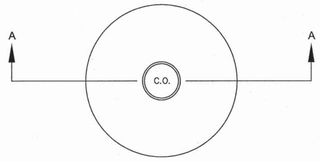

PLAN

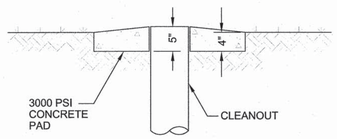

SECTION A-A

CLEANOUT PAD DETAIL

NOT TO SCALE

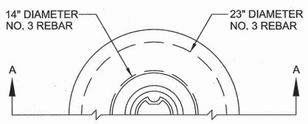

PLAN

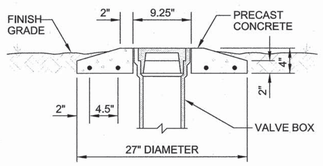

SECTION A-A

STANDARD VALVE BOX PROTECTOR

NOT TO SCALE

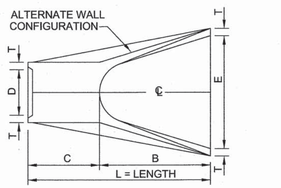

PLAN

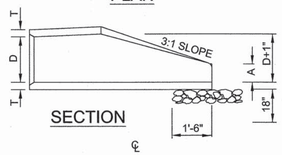

SECTION

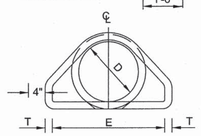

END VIEW

TABLE OF DIMENSIONS							
D	T	A	B	C	E	L	WT.
12"	2-1/4"	4"	2'-0"	4'-1"	2'-0"	6'-1"	730
15"	2-1/4"	6"	2'-3"	3'-10"	2'-0"	6'-1"	730
18"	2-1/2"	9"	2'-3"	3'-10"	3'-0"	6'-1"	1190
24"	3"	10"	3'-8"	2'-6"	4'-0"	6'-2"	1770
30"	3-1/2"	1'-0"	4'-6"	1'-8"	5'-0"	6'-2"	2380
36"	4"	1'-3"	5'-3"	2'-11"	6'-0"	8'-2"	5320
42"	4-1/2"	1'-9"	5'-3"	2'-11"	6'-6"	8'-2"	5920
48"	5"	2'-0"	6'-0"	2'-2"	7'-0"	8'-2"	7470
54"	5-1/2"	2'-3"	5'-6"	2'-10"	7'-6"	8'-4"	8810
60"	6"	2'-6"	5'-0"	3'-3"	8'-0"	8'-3"	11180
66"	6-1/2"	3'-0"	6'-0"	2'-3"	8'-6"	8'-3"	12530
72"	7"	3'-0"	6'-6"	1'-9"	9'-0"	8'-3"	13980

GENERAL NOTES:

1. SEE FORMER NCDOT STANDARD 310.01 FOR DETAILS.
2. REINFORCEMENT SHALL CONFORM TO THE REQUIREMENTS OF REINFORCED CONCRETE PIPE OF LIKE DIAMETER PER AASHTO M170, TABLE 2, WALL B.
3. ALL CONCRETE TO BE 3600 P.S.I COMPRESSIVE STRENGTH.
4. PROVIDE TONGUE OR SPIGOT JOINT AT INLET END SECTION.
5. PROVIDE GROOVE OR BELL JOINT AT OUTLET END SECTION.
6. THE DIMENSIONS FOR END SECTIONS SHALL SUBSTANTIALLY AGREE WITH THE TABLE. MINOR VARIATIONS WILL BE PERMITTED BASED ON THE MANUFACTURER'S STANDARD FORMS AND TEMPLATES.
7. NOT TO BE USED IN NCDOT MAINTAINED RIGHT OF WAY.

FLARED END SECTION

NOT TO SCALE

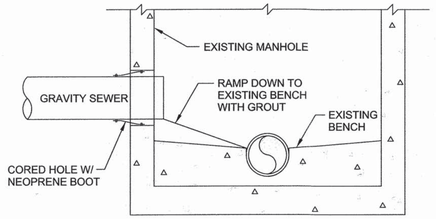

STANDARD SEWER LINE CONNECTION TO EXISTING MANHOLE

NOT TO SCALE

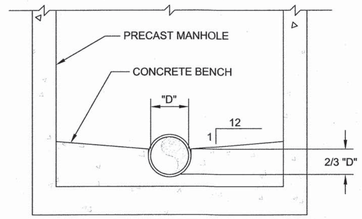

STANDARD MANHOLE CHANNEL & BENCH

NOT TO SCALE

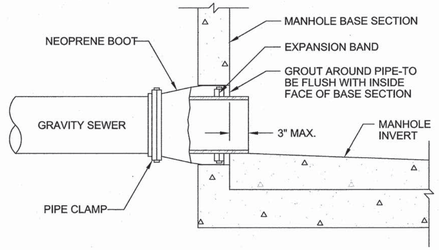

NOTES:

1. MATERIAL SPECIFICATIONS: NEOPRENE BOOT - ASTM C-923; PIPE CLAMP & EXPANSION CLAMP - STAINLESS STEEL, ASTM C-923.
2. TWO PIPE CLAMPS REQUIRED FOR PIPE O.D.'S 15" AND LARGER.

STANDARD MANHOLE BOOT

NOT TO SCALE

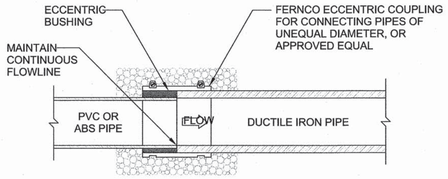

SECTION

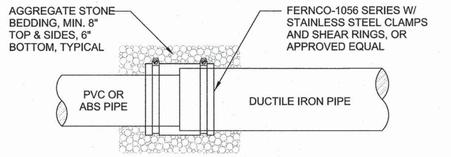

ELEVATION

NOTE: SEE STANDARD SEWER LINE TRENCH DETAIL FOR PIPE BEDDING BEYOND COUPLING.

STANDARD SEWER LINE COUPLING

NOT TO SCALE

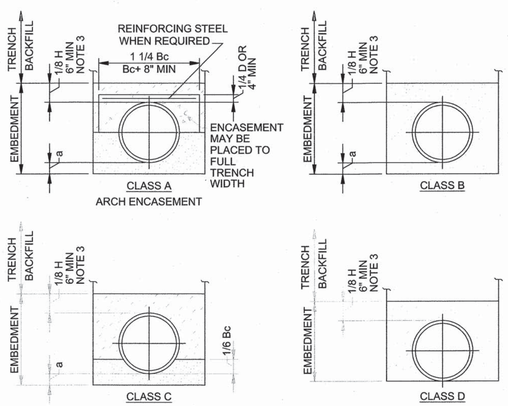

TABLE OF EMBEDMENT
DEPTHS BELOW PIPE

D	a MIN SOIL	a MIN ROCK
27" & SMALLER	6"	6"

LEGEND

Bc OUTSIDE DIAMETER OF PIPE
H COVER ABOVE TOP OF PIPE
D NOMINAL PIPE SIZE
a EMBEDMENT BELOW PIPE (SEE TABLE)

HAND PLACED EMBEDMENT
GRANULAR EMBEDMENT
CONCRETE

NOTES:

1. GRANULAR EMBEDMENT MATERIAL SHALL BE COARSE AGGREGATE SIZE NUMBER 57. EMBEDMENT MATERIAL SHALL BE PLACED IN LAYERS NOT MORE THAN 6" DEEP AND COMPACTED AS SPECIFIED.
2. HAND PLACED EMBEDMENT COARSE AGGREGATE SIZE NUMBER 57 SHALL BE COMPACTED FINELY DIVIDED MATERIAL FREE FROM DEBRIS AND STONES.
3. EMBEDMENT COARSE AGGREGATE SIZE NUMBER 57 ABOVE THE TOP OF THE PIPE SHALL BE AN UNCOMPACTED LAYER FOR ALL INSTALLATIONS.
4. REFER TO SPECIFICATIONS FOR GEOTECHNICAL FABRIC OR SPECIAL EMBEDMENT REQUIREMENTS FOR TRENCHES IN FINE SOILS EXTENDING BELOW GROUNDWATER LEVEL.
5. TRENCH OUTLINES DO NOT INDICATE ACTUAL TRENCH EXCAVATION SHAPE, SOIL CONDITIONS, OR PRESENCE OF SHEETING LEFT IN PLACE. EMBEDMENT MATERIAL SHALL EXTEND THE FULL WIDTH OF THE ACTUAL TRENCH EXCAVATION.
6. SEE SPECIFICATIONS FOR PIPE MATERIAL BEDDING TYPE.

STANDARD BEDDING DETAIL

NOT TO SCALE

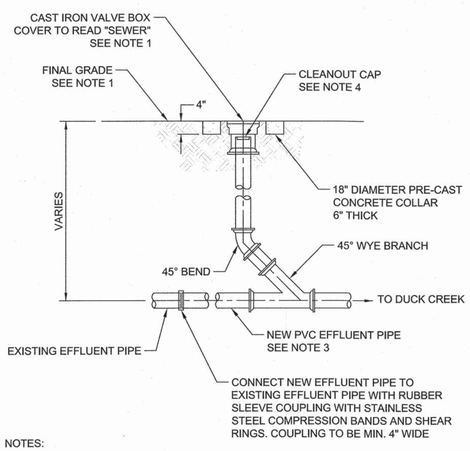

NOTES:

1. CLEANOUT COVER TO BE FLUSH WITH THE FINAL GRADE. RESTORE SURFACE TO MATCH EXISTING CONDITIONS IN ACCORDANCE WITH CHARLOTTE WATER STANDARD SPECIFICATIONS AND DETAILS
2. LOCATION OF CLEANOUT SHALL BE AS DIRECTED BY ENGINEER.
3. NEW EFFLUENT PIPE, CLEANOUT PIPING AND FITTINGS SHALL BE DUCTILE IRON PIPE (DIP) OR PVC. NEW EFFLUENT PIPE SHALL BE INSTALLED TO MATCH THE EXISTING SLOPES AND CONFIGURATION UNLESS NOTED OTHERWISE.
4. CLEANOUT CAP SHALL BE THREADED PVC WITH GRIPPER PLUG, END OF PIPE MODEL.

TYPICAL CLEANOUT ASSEMBLY

NOT TO SCALE

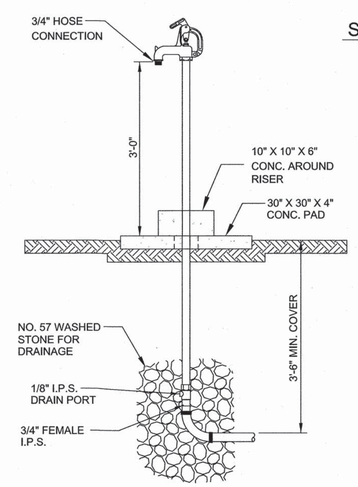

NON-FREEZE YARD HYDRANT

NOT TO SCALE

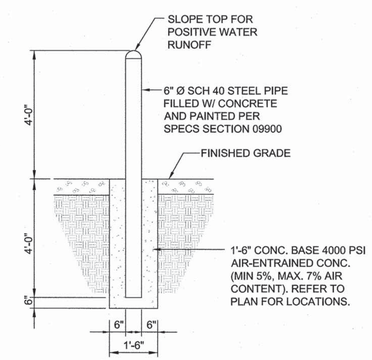

PIPE BOLLARD DETAIL

NOT TO SCALE

WK DICKSON
community infrastructure consultants
616 COLONNADE DRIVE
CHARLOTTE, NC 28205
(t)704-334-5348
(f)704-334-0078
WWW.WKDICKSON.COM
NC LICENSE NO.F-0374

NORTH CAROLINA PROFESSIONAL SEAL 8802 ENGINEER CHARLES B. FRONEBERGER

PROFESSIONAL SEAL

REVISION RECORD			
NO.	DATE	DESCRIPTION	BY

FINAL DRAWINGS - NOT RELEASED FOR CONSTRUCTION

PROJECT NAME: KILLIAN CREEK WWTP PHASE 3 UPGRADE

DRAWING TITLE: MISCELLANEOUS DETAILS

PROJ. MGR.:	CRF
DESIGN BY:	CRF
DRAWN BY:	NS/CH
PROJ. DATE:	SEPT. 2018

DRAWING NUMBER:

C.19 OF 168

WKD PROJ. NO.: 20170294.00.CL

COPYRIGHT © WK DICKSON & CO., INC., ALL RIGHTS RESERVED. REPRODUCTION OR USE OF THE CONTENTS OF THIS DOCUMENT, ADDITIONS OR CHANGES TO THE CONTENTS OF THIS DOCUMENT, OR DELIVERY TO THIRD PARTIES OF THE CONTENTS OF THIS DOCUMENT WITHOUT WRITTEN CONSENT FROM THE ORIGINAL OF THIS DOCUMENT, MARKED WITH AN ORIGINAL SIGNATURE AND SEAL, SHALL BE CONSIDERED TO BE VALID, TRUE COPIES.

X:\LCPW STANDARD DETAIL AND SPECIFICATIONS\2013 DRAFT\04_STANDARD DETAILS\LCPW_WS-01.DWG

THRUST BLOCK SPECIFICATIONS AND DIMENSIONS

FITTING	AREA (IN^2)	TEES		AREA OF THRUST BLOCK (FT^2)	90° BENDS AND DEAD MAN (FT)		AREA OF THRUST BLOCK (FT^2)	45° BENDS AND "Y"'S (FT)		AREA OF THRUST BLOCK (FT^2)	22.5° BENDS (FT)		AREA OF THRUST BLOCK (FT^2)	11.25° BENDS (FT)		AREA OF THRUST BLOCK (FT^2)
SIZES (IN)		A (FT)	B (FT)		A (FT)	B (FT)		A (FT)	B (FT)		A (FT)	B (FT)		A (FT)	B (FT)	
6	28.3	2.1	1.0	2.1	2.4	1.2	3.0	1.8	0.9	1.6	1.3	0.6	0.8	1.3	0.6	0.8
8	50.3	2.7	1.4	3.8	3.3	1.6	5.3	2.4	1.2	2.9	1.7	0.9	1.5	1.7	0.9	1.5
10	78.5	3.4	1.7	5.9	4.1	2.0	8.3	3.0	1.5	4.5	2.1	1.1	2.3	2.1	1.1	2.3
12	113.1	4.1	2.1	8.5	4.9	2.4	12.0	3.6	1.8	6.5	2.6	1.3	3.3	2.6	1.3	3.3
14	153.9	4.8	2.4	11.5	5.7	2.9	16.3	4.2	2.1	8.8	3.0	1.5	4.5	3.0	1.5	4.5
16	201.1	5.5	2.7	15.1	7.1	3.0	21.3	4.8	2.4	11.5	3.4	1.7	5.9	3.4	1.7	5.9
18	254.5	6.4	3.0	19.1	18.0	CY	27.0	5.4	2.7	14.6	3.9	1.9	7.4	3.9	1.9	7.4
20	314.2	7.9	3.0	23.6	22.2	CY	33.3	6.0	3.0	18.0	4.3	2.1	9.2	4.3	2.1	9.2
24	452.4	22	CY	33.9	32.0	CY	48.0	17.3	CY	26.0	5.1	2.6	13.2	5.1	2.6	13.2

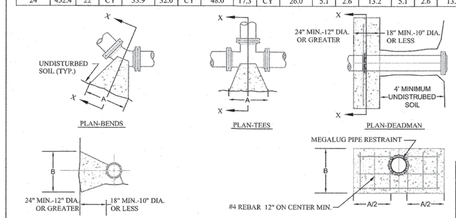

NOTES:

1. BASED ON 200 PSI STATIC PRESSURE PLUS AWWA WATER HAMMER ALLOWANCE ASSUMING 4000 PSF BEARING CAPACITY OF SOIL.
2. ALL BEARING SURFACES TO BE CARRIED TO UNDISTURBED GROUND.
3. THRUST BLOCKS TO BE USED AT ALL LINES OPERATING UNDER PRESSURE. THESE DETAILS IN NO WAY LIMIT THE SIZE OR LOCATION OF ADDITIONAL BLOCKING WHEN REQUESTED BY THE COUNTY ENGINEER.
4. DEPTH FROM GROUND SURFACE TO TOP OF BLOCKING SHALL BE GREATER THAN HEIGHT OF BLOCKING.
5. ALL FITTINGS, VALVES, ETC. SHALL BE WRAPPED WITH VISQUEEN OR POLYWRAP BEFORE CONCRETE IS PLACED, TO PREVENT CORROSION OR BONDING OF THE CONCRETE TO THE BOLTS, FITTINGS, OR PIPE.
6. WIDTH OF THE THRUST BLOCK SHOULD BE AT LEAST TWO TIMES THE HEIGHT OF THE THRUST BLOCK.
7. CUBIC YARDS OF CONCRETE IS SPECIFIED TO OPPOSE THE THRUST FORCE WHEN DIMENSION "A" EXCEEDS 8 FEET.
8. ALTHOUGH THE BEARING STRENGTHS USED IN THIS TABLE HAVE BEEN USED SUCCESSFULLY IN THE DESIGN OF THRUST BLOCKS AND ARE CONSIDERED TO BE CONSERVATIVE, THEIR ACCURACY IS TOTALLY DEPENDANT ON ACCURATE SOIL IDENTIFICATION AND EVALUATION. THE ULTIMATE RESPONSIBILITY FOR SELECTING THE PROPER BEARING STRENGTH OF A PARTICULAR SOIL TYPE RESTS WITH THE DESIGN ENGINEER.

LINCOLN COUNTY PUBLIC WORKS
115 W. MAIN STREET
LINCOLNTON, NC 28092
Phone (704) 736-8497 Fax (704) 736-8499

THRUST BLOCKING DETAIL

APPROVED:	MCN	12/31/2013	DRAWN BY:	JDH
SCALE:	N.T.S.	FIGURE :	WS-01	

2

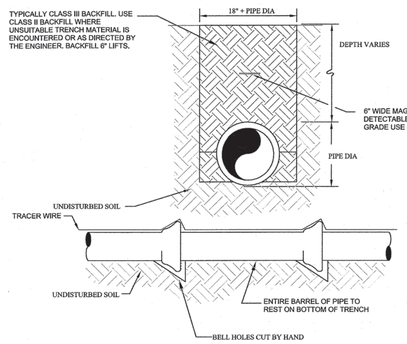

NOTES:

1. BACKFILL TO A MINIMUM 95% OF MAXIMUM DENSITY WHERE EXCAVATIONS CUT THROUGH PAVEMENT, CURBS, AND UNDER OR ADJACENT TO STRUCTURES.
2. WELL TAMPED #57 STONE IS REQUIRED TO 6" BELOW OR HALF THE PIPE DIAMETER WHICHEVER IS GREATER WHERE ROCK OR WETUNSUITABLE MATERIAL IS ENCOUNTERED.
3. ALL PIPE SHALL HAVE 36" MINIMUM COVER
4. TRACER WIRE SHALL BE MINIMUM 14 GAUGE BLUE INSULATED COPPER SECURED WITH MINIMUM 2 WRAPS OF TAPE TO THE MAIN AT 10' INTERVALS

LINCOLN COUNTY PUBLIC WORKS
115 W. MAIN STREET
LINCOLNTON, NC 28092
Phone (704) 736-8497 Fax (704) 736-8499

STANDARD WATER MAIN TRENCH

APPROVED:	MCN	12/31/2013	DRAWN BY:	JDH
SCALE:	N.T.S.	FIGURE :	WL-02	

X:\LCPW STANDARD DETAIL AND SPECIFICATIONS\2013 DRAFT\04_STANDARD DETAILS\LCPW_WS-07.DWG

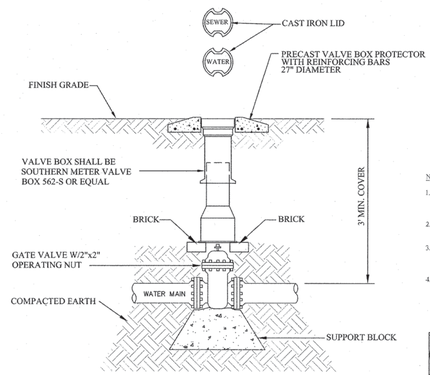

NOTES

1. ALL POTABLE WATER VALVES SHALL BE RESILIENT SEAT GATE VALVES CONFORMING TO AWWA C509-01 OR CURRENT
2. ALL SEWER FORCE MAIN VALVES SHALL BE ECCENTRIC PLUG VALVES UNLESS APPROVED IN WRITING BY LCPW
3. ANY VALVE WITH AN OPERATING NUT DEEPER THAN 6' BELOW GRADE SHALL BE EQUIPED WITH A RISER STEM TO WITHIN 12" OF GRADE
4. SUPPORT BLOCK SHALL BE SIZED TO EVENLY DISTRIBUTE THE WEIGHT OF THE VALVE,VALVE BOX ASSEMBLY, AND ANY OTHER APPLICABLE LOADS AS DETERMINED BY THE DESIGN ENGINEER

LINCOLN COUNTY PUBLIC WORKS
115 W. MAIN STREET
LINCOLNTON, NC 28092
Phone (704) 736-8497 Fax (704) 736-8499

VALVE BOX AND VALVE

APPROVED:	MCN	12/31/2013	DRAWN BY:	JDH
SCALE:	N.T.S.	FIGURE :	WS-07	

X:\LCPW STANDARD DETAIL AND SPECIFICATIONS\2013 DRAFT\04_STANDARD DETAILS\LCPW_WS-05.DWG

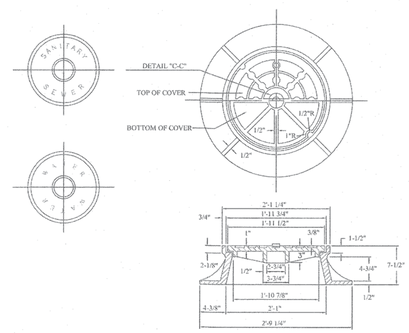

NOTES:

1. ALL CASTINGS TO BE FREE FROM SAND HOLES AND NO PLUGGING WILL BE ALLOWED.
2. CAST WITH THE USE OF ALUMINUM PATTERNS.
3. CASTING TO BE PAINTED WHILE HOT WITH COAL TAR.
4. SLIGHT DRAFT ALLOWED ON STRAIGHT FACES.
5. COVERS SHALL HAVE TWO - 1" DIAMETER HOLES. WATERTIGHT COVERS SHALL BE SOLID WITH RUBBER GASKET SEAL AND LIFTING BARS.
6. STANDARD LETTERS UNLESS OTHERWISE SPECIFIED.
7. APPROXIMATE WEIGHTS
   FRAME - 190 LBS.
   COVER - 120 LBS.
   TOTAL - 310 LBS.
8. COVERS SHALL BE USF669 RING AND KL COVER OR EQUAL. WATERTIGHT COVERS SHALL BE USF710 RING AND DPSSG COVER OR EQUAL.
9. WHEN THE MANHOLE IS EXPOSED TO ROAD TRAFFIC, THE TOP OF THE FRAME IS TO BE FLUSH WITH THE GROUND. AT THE OTHER LOCATIONS IT SHALL BE 9" ABOVE THE GROUND.
10. RINS AND COVERS TO BE GRAY CAST IRON COMPLYING TO ASTM A48, CLASS 30 IRON.
11. MANHOLES COVERS SHALL BE HEAVY DUTY AND RATED FOR H-20 TRAFFIC LOADS.

LINCOLN COUNTY PUBLIC WORKS
115 W. MAIN STREET
LINCOLNTON, NC 28092
Phone (704) 736-8497 Fax (704) 736-8499

CAST IRON FRAME AND COVER FOR MANHOLES

APPROVED:	MCN	12/31/2013	DRAWN BY:	JDH
SCALE:	N.T.S.	FIGURE :	WS-05	

X:\LCPW STANDARD DETAIL AND SPECIFICATIONS\2013 DRAFT\04_STANDARD DETAILS\LCPW_WS-04.DWG

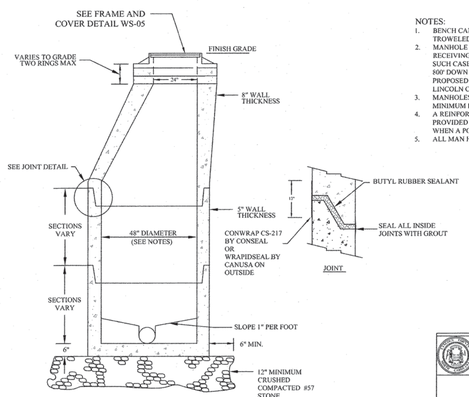

NOTES:

1. BENCH CAN BE PRECAST, OR BRICK AND MORTAR TROWELED SMOOTH.
2. MANHOLE SHALL BE UNLINED UNLESS IT IS THE RECEIVING MANHOLE FOR A FORCE MAIN. IN SUCH CASE ALL MANHOLES FOR A DISTANCE OF 100' DOWN STREAM SHALL BE LINED. ALL PROPOSED LINERS MUST BE SUBMITTED TO LINCOLN COUNTY PUBLIC WORKS FOR APPROVAL.
3. MANHOLES OVER 14 FT. DEEP SHALL HAVE A 60" MINIMUM INSIDE DIAMETER.
4. A REINFORCED CONCRETE SLAB SHALL BE PROVIDED ON MANHOLE OVER 12' IN DEPTH OR WHEN A POOR SOIL IS ENCOUNTERED
5. ALL MAN HOLES SHALL MEET AASHTO M199

LINCOLN COUNTY PUBLIC WORKS
115 W. MAIN STREET
LINCOLNTON, NC 28092
Phone (704) 736-8497 Fax (704) 736-8499

PRECAST CONCRETE MANHOLE

APPROVED:	MCN	12/31/2013	DRAWN BY:	JDH
SCALE:	N.T.S.	FIGURE :	SS-01	

X:\LCPW STANDARD DETAIL AND SPECIFICATIONS\2013 DRAFT\04_STANDARD DETAILS\LCPW_WS-02.DWG

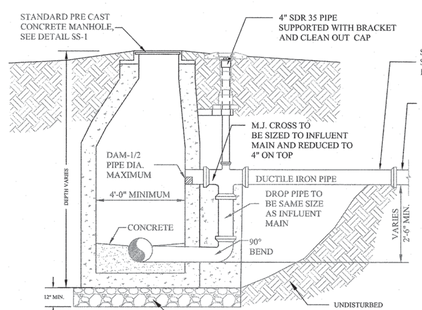

LINCOLN COUNTY PUBLIC WORKS
115 W. MAIN STREET
LINCOLNTON, NC 28092
Phone (704) 736-8497 Fax (704) 736-8499

DROP MANHOLE CONNECTION

APPROVED:	MCN	12/31/2013	DRAWN BY:	JDH
SCALE:	N.T.S.	FIGURE :	SS-03	

X:\LCPW STANDARD DETAIL AND SPECIFICATIONS\2013 DRAFT\04_STANDARD DETAILS\LCPW_WS-03.DWG

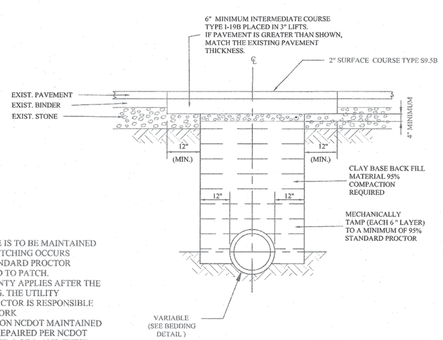

NOTES

1. FULL DEPTH STONE IS TO BE MAINTAINED UNTIL ASPHALT PATCHING OCCURS
2. MINIMUM 95% STANDARD PROCTOR DENSITY REQUIRED TO PATCH.
3. ONE YEAR WARRANTY APPLIES AFTER THE DATE OF PATCHING. THE UTILITY COMPANY CONTRACTOR IS RESPONSIBLE FOR WARRANTY WORK
4. ALL UTILITY CUTS ON NCDOT MAINTAINED ROADS SHALL BE REPAIRED PER NCDOT DRAWING 654.01, SHT. 2 OF 2, AND THESE MATERIALS SHOULD BE COMPACTED TO WITHIN 95% OF STANDARD PROCTOR. THESE CUTS SHOULD BE PATCHED WITH ASPHALT SURFACE MATERIAL, AND PER (71D-26) ON THE SAME DAY AS THE CUT IS MADE.

LINCOLN COUNTY PUBLIC WORKS
115 W. MAIN STREET
LINCOLNTON, NC 28092
Phone (704) 736-8497 Fax (704) 736-8499

UTILITY PAVEMENT REPAIR

APPROVED:	MCN	12/31/2013	DRAWN BY:	JDH
SCALE:	N.T.S.	FIGURE :	WS-03	

X:\LCPW STANDARD DETAIL AND SPECIFICATIONS\2013 DRAFT\04_STANDARD DETAILS\LCPW_SS-03.DWG

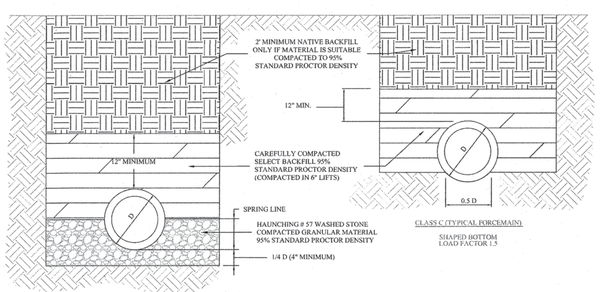

LINCOLN COUNTY PUBLIC WORKS
115 W. MAIN STREET
LINCOLNTON, NC 28092
Phone (704) 736-8497 Fax (704) 736-8499

STANDARD BEDDING FOR SEWER PIPE

APPROVED:	MCN	12/31/2013	DRAWN BY:	JDH
SCALE:	N.T.S.	FIGURE :	SS-04	

X:\LCPW STANDARD DETAIL AND SPECIFICATIONS\2013 DRAFT\04_STANDARD DETAILS\LCPW_WS-02.DWG

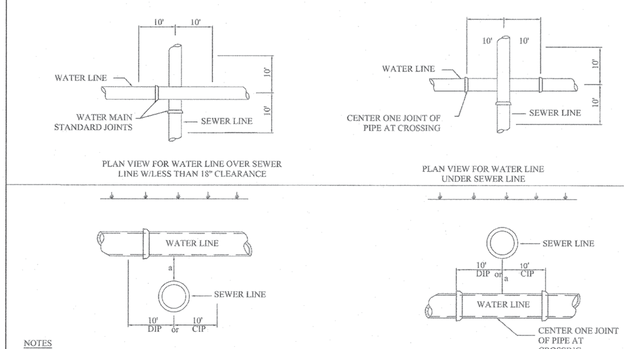

NOTES

1. IF DIMENSION "a" IS LESS THAN 18" BOTH WATER AND SEWER LINE SHALL BE DUCTILE IRON PIPE, FOR 10' EACH SIDE OF CROSSING
2. WHERE WATER MUST CROSS UNDER SEWER ONE JOINT OF DIP WATER MAIN PIPE SHALL BE CENTERED AT THE POINT OF CROSSING
3. ALL WATER AND SEWER CROSSINGS MUST MEET NCDENR MINIMUM SEPARATION REQUIREMENTS

LINCOLN COUNTY PUBLIC WORKS
115 W. MAIN STREET
LINCOLNTON, NC 28092
Phone (704) 736-8497 Fax (704) 736-8499

WATER AND SEWER CROSSING REQUIREMENTS

APPROVED:	MCN	12/31/2013	DRAWN BY:	JDH
SCALE:	N.T.S.	FIGURE :	WS-02	

WK DICKSON
community infrastructure consultants
616 COLONNADE DRIVE
CHARLOTTE, NC 28205
(t)704-334-5348
(f)704-334-0078
WWW.WKDICKSON.COM
NC LICENSE NO.F-0374

NORTH CAROLINA PROFESSIONAL SEAL ENGINEER 8802 CHARLES R. FRONEBERGER

PROFESSIONAL SEAL

REVISION RECORD

NO.	DATE	DESCRIPTION	BY
1	10/9/18	ISSUE FOR OWNER/NCDEQ REVIEW	CRF
2	9/17/19	REVISION TO LINCOLN COUNTY DETAIL WL-02	RWH

NOT RELEASED FOR CONSTRUCTION

FINAL DRAWINGS

PROJECT NAME: KILLIAN CREEK WWTP PHASE 3 UPGRADE

DRAWING TITLE: UTILITY DETAILS

PROJ. MGR.:	CRF
DESIGN BY:	CRF
DRAWN BY:	NS/CH
PROJ. DATE:	SEPT. 2018

DRAWING NUMBER: C.20 OF 168

WKD PROJ. NO.: 20170294.00.CL

COPYRIGHT © 2013 WK DICKSON & CO., INC. ALL RIGHTS RESERVED. REPRODUCTION OR USE OF THIS DOCUMENT IN WHOLE OR IN PART WITHOUT WRITTEN CONSENT OF WK DICKSON & CO., INC. IS PROHIBITED. ONLY COPIES FROM THE ORIGINAL OF THIS DOCUMENT MARKED WITH ORIGINAL SIGNATURE AND SEAL SHALL BE CONSIDERED TO BE VALID, TRUE COPIES.

SECTION 5
STANDARD PLAN NOTES

5.1 GENERAL

The standard notes shown below shall be included on all water and sewer plans submitted for approval to Lincoln County Public Works (LCPW).

A. All work shall conform to latest revision of the LCPW Operational Manual which is on file at the Division of Lincoln County Public Works office (115 W Main Street, Lincolnton, North Carolina 28092).
B. Any quantities shown on plans are not verified by LCPW.
C. At the site keep and maintain one record copy of all Contract Documents, reference documents and all technical documents submitted in good order. As the work progresses the Engineer or his designated representative shall record on one set of reproducible drawings all changes and deviations from the original Plans. He shall record the exact location of all changes in vertical and horizontal alignment by offsets and ties at each; sewer, water, electric, gas, communication and other services by off-set distance to permanent improvements such as building and curbs.

These Record Drawings must be certified by the North Carolina Registered Professional Engineer who prepared the plans and signs and seals these plans. The Record Drawings shall include vertical and horizontal alignment of all water, sewer, and effluent reuse lines, valves, tees, bends, reducers, hydrants, pump stations, service connections, meter boxes and/or pads, and other pertinent structures. Pipeline runs in excess of 500 feet, without fittings shall include vertical alignment information at 500 foot intervals. Said alignment shall be tied to permanent improvements, such as roadway and/or railroad centerlines and rights-of-way, building and property corners, and shall be certified by a Professional Land Surveyor, licensed in the State of North Carolina. The Professional Land Surveyor can coordinate with the Contractor to install the necessary appurtenances on buried utilities to facilitate the survey after construction is completed. In addition, Parcel ID numbers and street names shall be shown on the plan.

On a case by case basis, Lincoln County Public Works may waive the requirement for certification by a Professional Land Surveyor, licensed in the State of North Carolina. However, prior consent must first be obtained from Lincoln County Public Works. The County shall withhold final acceptance of the project until the requirement for record drawings and related records has been met. Record Drawings without detailed field verified horizontal and vertical locations of all facilities shown will be rejected.

D. A pre-construction meeting is required before work may begin. Lincoln County Public Works shall be notified 48 hours prior to project mobilization.

E. All work and materials, which do not conform to LCPW specifications, are subject to removal and replacement at the Contractor's expense.
F. Any work performed without the knowledge of LCPW is subject to re-excavation, removal and replacement of same to be done at the Contractor's expense.
G. The Contractor shall provide sufficient personnel and equipment on the job at all times during construction to satisfy the specifications and to complete work.
H. LCPW inspection staff may observe project construction.
I. The Contractor is to uncover all existing lines being tied into and verify grades before beginning construction.
J. It is the Contractor's responsibility to locate and take all possible precautions to avoid any damage to all underground pipelines, telephone, cable TV, electric lines/conduits and structures in advance of any construction. LCPW will not guarantee any locations as shown on these plans or those omitted from these plans. The Contractor shall be fully responsible for any and all damages which may occur by his failure to exactly locate and protect existing utilities and structures.
K. Contractor shall verify all quantities shown on the plans. If any discrepancies in quantities are found, the Contractor shall notify the Project Engineer and LCPW.
L. All Regulatory and Permitting Agencies' requirements shall be complied with.
M. Appropriate turbidity control devices (e.g. silt fences, hay bails) will be utilized during all phases of installation and grading. Contractor is responsible for contacting Lincoln County Soil and Conservation Department to determine the requirements for permitting, developing and maintaining an effective Storm Water Pollution Prevention Plan.
N. Locations, elevations, and dimensions of existing utilities, structures and other features are shown according to the best information available at the time of preparation of these plans, but do not purport to be absolutely correct. Prior to construction, the Contractor shall verify and be fully responsible for any and all damages which might be occasioned by his failure to exactly locate and preserve any and all existing utilities, structures, and other features affecting his work. Anything not shown on these drawings should be brought to the attention of the Engineer and shall not constitute an extra, unless approved by the Engineer.
O. The Contractor shall contact the Engineer and LCPW immediately concerning any conflicts with LCPW utilities/structures arising during construction of any facilities shown on these drawings.
P. Traffic must be maintained at all times as per North Carolina County Department of Transportation (NCDOT).
Q. The Contractor shall notify utilities utilizing the 811 service prior to starting construction.
R. The Contractor shall replace all pavement, curbs, driveways, sidewalks, fences, etc., with the same type of material that was removed during construction or as directed by the Engineer. The Contractor shall restore all areas affected by the construction to its original condition, or better.
S. Within the NCDOT Right-of-Way, all disturbed areas shall receive grassing (seeding) or sodding materials in accordance with NCDOT specifications.
T. The information provided in these plans is solely to assist the Contractor in assessing the nature and extent of conditions which may be encountered during the course of work. All Contractors are directed, prior to bidding, to conduct whatever investigations they may deem necessary to arrive at their own conclusion regarding the actual conditions that will be encountered, and upon which their bids will be based.
U. All frames, covers valve boxes, meter boxes and manholes shall be adjusted to finished grade upon completion of paving or related construction.

LCPW Standards Rev: March 2014

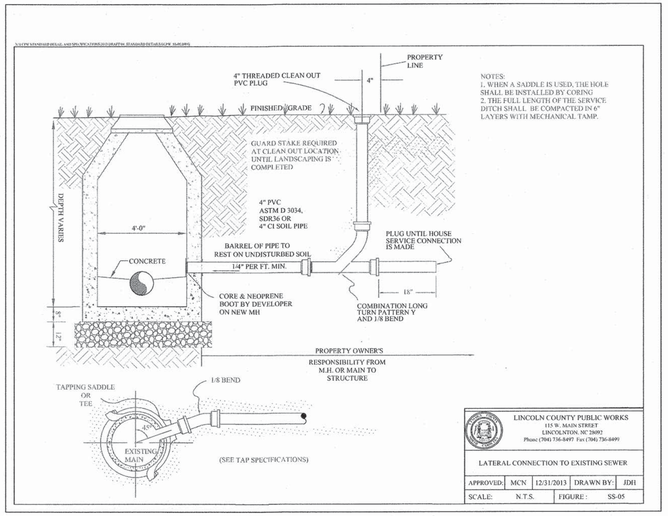

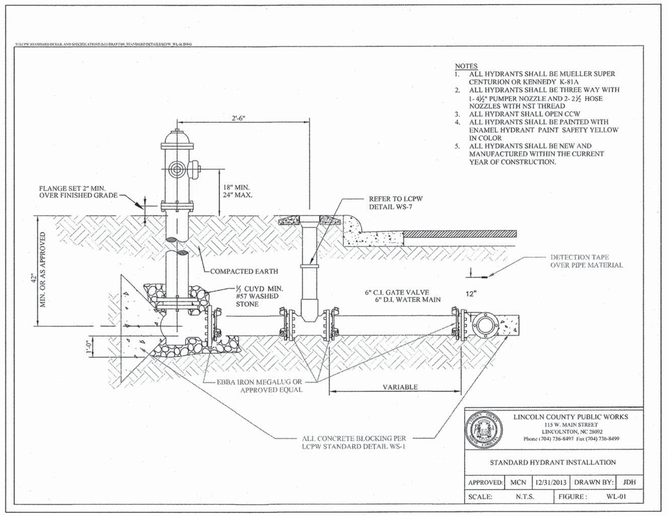

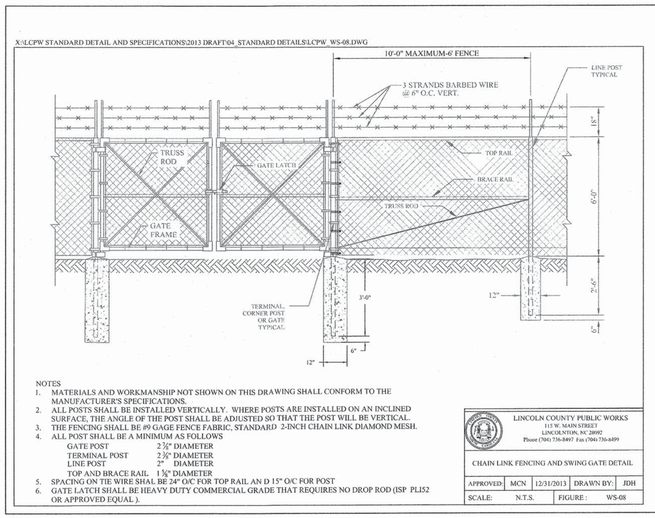

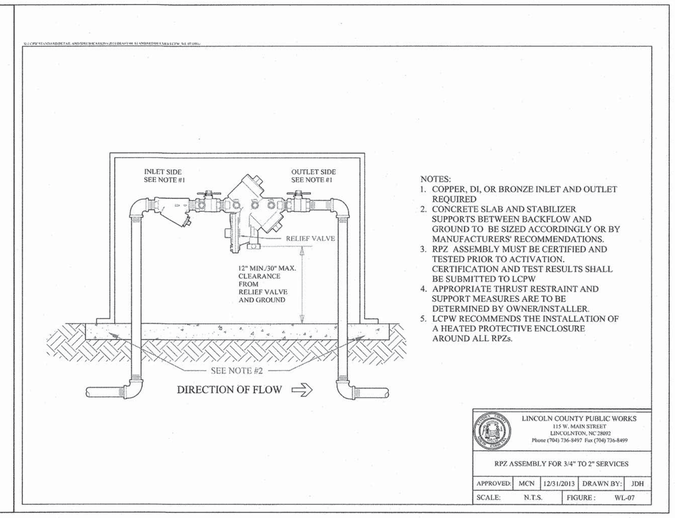

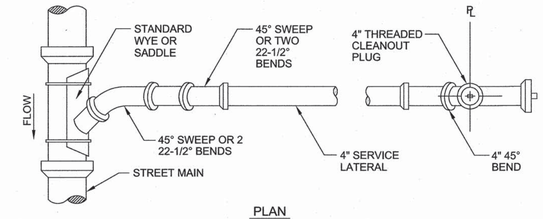

PLAN

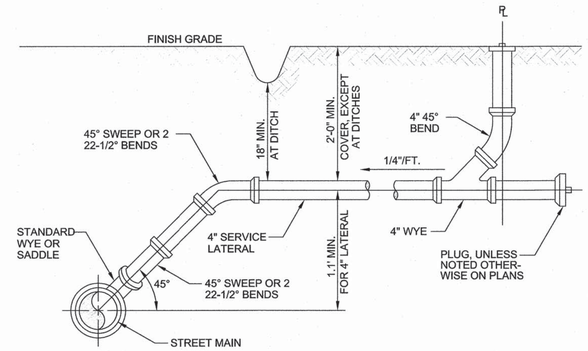

ELEVATION

NOTES:

1. COORDINATE LOCATION & DEPTH OF LATERALS TO OCCUPIED LOTS WITH EACH PROPERTY OWNER.
2. ALL LATERALS SHALL BE INSTALLED AT 90° TO THE SEWER LINE UNLESS SHOWN OTHERWISE.
3. USE TYPICAL SERVICE LATERALS WHERE MINIMUM SLOPE AND COVER REQUIREMENTS CAN BE MET.
4. CLEANOUTS TO BE PROVIDED ON ALL LATERALS AT 50' INTERVALS AND AT CHANGES IN DIRECTION.

DEEP SANITARY SEWER SERVICE LATERAL CONNECTION

NOT TO SCALE

WK DICKSON
community infrastructure consultants
616 COLONNADE DRIVE
CHARLOTTE, NC 28205
(t)704-334-5348
(f)704-334-0078
WWW.WKDICKSON.COM
NC LICENSE NO.F-0374

NORTH CAROLINA PROFESSIONAL SEAL 8802 ENGINEER CHARLES R. FRONEBERGER

PROFESSIONAL SEAL

NO.	DATE	DESCRIPTION	BY

REVISION RECORD

FINAL DRAWINGS - NOT RELEASED FOR CONSTRUCTION

PROJECT NAME: KILLIAN CREEK WWTP PHASE 3 UPGRADE

DRAWING TITLE: UTILITY DETAILS

PROJ. MGR.:	CRF
DESIGN BY:	CRF
DRAWN BY:	NS/CH
PROJ. DATE:	SEPT. 2018

DRAWING NUMBER:

C.21 OF 168

WKD PROJ. NO.: 20170294.00.CL

COPYRIGHT © WK DICKSON & CO., INC. ALL RIGHTS RESERVED. REPRODUCTION OR USE OF THE CONTENTS OF THIS DOCUMENT, ADVERTISE OR OTHERWISE WITHOUT WRITTEN CONSENT IS PROHIBITED. THE CONTENTS OF THIS DOCUMENT MAY BE DISTRIBUTED ONLY FROM THE ORIGINAL OF THIS DOCUMENT, MARKED WITH AN ORIGINAL SIGNATURE AND SEAL SHALL BE CONSIDERED TO BE VALID, TRUE COPIES.

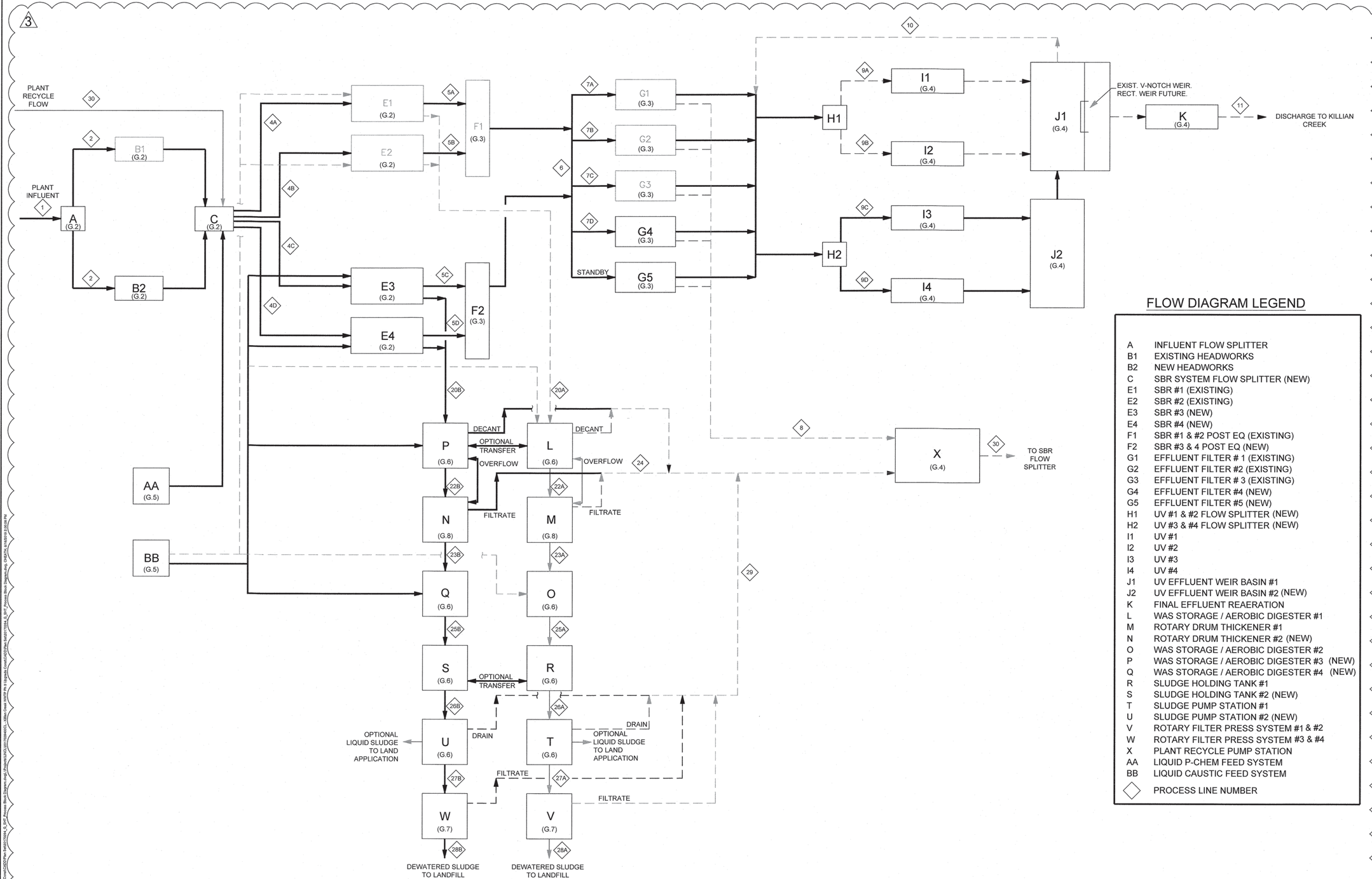

FLOW DIAGRAM LEGEND

A	INFLUENT FLOW SPLITTER
B1	EXISTING HEADWORKS
B2	NEW HEADWORKS
C	SBR SYSTEM FLOW SPLITTER (NEW)
E1	SBR #1 (EXISTING)
E2	SBR #2 (EXISTING)
E3	SBR #3 (NEW)
E4	SBR #4 (NEW)
F1	SBR #1 & #2 POST EQ (EXISTING)
F2	SBR #3 & 4 POST EQ (NEW)
G1	EFFLUENT FILTER # 1 (EXISTING)
G2	EFFLUENT FILTER #2 (EXISTING)
G3	EFFLUENT FILTER # 3 (EXISTING)
G4	EFFLUENT FILTER #4 (NEW)
G5	EFFLUENT FILTER #5 (NEW)
H1	UV #1 & #2 FLOW SPLITTER (NEW)
H2	UV #3 & #4 FLOW SPLITTER (NEW)
I1	UV #1
I2	UV #2
I3	UV #3
I4	UV #4
J1	UV EFFLUENT WEIR BASIN #1
J2	UV EFFLUENT WEIR BASIN #2 (NEW)
K	FINAL EFFLUENT REAERATION
L	WAS STORAGE / AEROBIC DIGESTER #1
M	ROTARY DRUM THICKENER #1
N	ROTARY DRUM THICKENER #2 (NEW)
O	WAS STORAGE / AEROBIC DIGESTER #2
P	WAS STORAGE / AEROBIC DIGESTER #3 (NEW)
Q	WAS STORAGE / AEROBIC DIGESTER #4 (NEW)
R	SLUDGE HOLDING TANK #1
S	SLUDGE HOLDING TANK #2 (NEW)
T	SLUDGE PUMP STATION #1
U	SLUDGE PUMP STATION #2 (NEW)
V	ROTARY FILTER PRESS SYSTEM #1 & #2
W	ROTARY FILTER PRESS SYSTEM #3 & #4
X	PLANT RECYCLE PUMP STATION
AA	LIQUID P-CHEM FEED SYSTEM
BB	LIQUID CAUSTIC FEED SYSTEM
◇	PROCESS LINE NUMBER

WASTEWATER TREATMENT PROCESS:

Line No.	Units	1	2A & 2B	3	4A, 4B, 4C & 4D	5A, 5B, 5C &5D	6	7A, 7B, 7C & 7D *	8	9A, 9B, 9C & 9D	10	11
Description		Plant Influent	Headworks Inf.	Influent + Recycle	SBR Influent/Basin	SBR Decant	Post SBR EQ Eff.	Disc Filter Inf/Filter	Backwash	UV INFLENT	LOW FLOW RECIR.	Plant Effluent
Flow, Average	mgd	6.6	3.3	7.1	1.78	1.73	6.92	1.73	0.33	1.65	N/A	6.59
Flow, Maximum	mgd	16.50	8.25	16.5	4.13	4.08	16.32	4.08	0.77	3.89	N/A	15.6
Flow, Design Max	gpm	11,458	5729	13,458	2,865	2,865	11,458	2,865	535	2731	60	10,799
BOD5	mg/L	282	282	266	266	5	5	5	5	5	5	5
BOD5 (Ave)	lbs/day	15,522	7761	15,751	3,938	72	289	72	12	69		275
TSS	mg/L	285	285	272	272	15	15	15	214	5	5	5
TSS (Ave)	lbs/day	15,688	7844	16,106	4,027	216	866	216	588	69		275
VSS	mg/L	228	228	204	218	11	11	11	151	4	4	4
VSS (Ave)	lbs/day	12,550	6275	12,080	3,020	158	635	159	416	55		220
Total Phosphorus	mg/L	8	8	8	8	3	3	3	1	<1		<1
Ammonia Nitrogen (Ave)	mg/L	36	36	35	35	1	1	1	1	<1		<1
Total Nitrogen	mg/L	53	53	52	52	6	6	6	6	<6		<6

BIOSOLIDS:

Line No.	Units	20A & 20B		22A & 22B	23A & 23B	24	25A & 25B	26A & 26B	27A & 27B	28A & 27B	29	30
Description		WAS/SBR SYSTEM	Total WAS	RDT INF	RDT EFF	RDT FILTRATE	DIGEST 2& 4 EFF.	WASTE SLUDGE	TO DEWATER.	FINAL SLUDGE	RFP FILTRATE	RETURN FLOW
Flow, Average	gpm	62.1	124.1	62.1	17.7	88.8	17.7	17.7				350
Flow, Average	mgd	0.089	0.18	0.09	0.025	0.13	0.025	0.025	0.025	0.002	0.046	0.50
Flow, Maximum	gpm	400	800	400	400	< 800	N/A	N/A	120			2000
TSS	mg/l	8,500	8,500	7,722	25,000	9	18,422	18,422	18,422	180,000	525	48
% TSS Solids	%	0.85%	0.85%	0.77%	2.50%	N/A	1.84%	1.84%	1.84%	18.00%	0.05%	N/A
TSS	lbs/day	6336.5	12673	5757	5469	576	4030	4030	4,030	3828	201	789
VSS	mg/l	6375	6375	5597	18664	6	11543	11543	11,543			
VSS	lbs/day	4752.4	9505	4173	3964	417	2525	2525	2,525			
VSS Destoried	lbs/day			1160			1439					
VSS/TSS	%			72%	72.48%		62.66%					
% Total VSS Reduction				12%			36%					

FINAL DRAWINGS - NOT RELEASED FOR CONSTRUCTION

WK DICKSON
community infrastructure consultants
616 COLONNADE DRIVE
CHARLOTTE, NC 28205
(t)704-334-5348
(f)704-334-0078
WWW.WKDICKSON.COM
NC LICENSE NO.F-0374

NORTH CAROLINA PROFESSIONAL ENGINEER SEAL 8802 CHARLES R. FRONEBERGER
PROFESSIONAL SEAL

REVISION RECORD

NO.	DATE	DESCRIPTION	BY
1	10/9/18	ISSUE FOR OWNER/NCDEQ REVIEW	CRF
2	5/21/19	REVISED LEGEND AND REFORMATTED BLOCK DIAGRAM	WBK
3	9/17/19	ROTARY FILTER PRESS FILTRATE AND MASS BALANCE	RWH

PROJECT NAME: KILLIAN CREEK WWTP PHASE 3 UPGRADE

DRAWING TITLE: PROCESS BLOCK DIAGRAM

PROJ. MGR.:	CRF
DESIGN BY:	CRF
DRAWN BY:	NS/CH
PROJ. DATE:	SEPT. 2018
DRAWING NUMBER:	G.1 OF 168
WKD PROJ. NO.:	20170294.00.CL

COPYRIGHT © W.K. DICKSON & CO., INC., ALL RIGHTS RESERVED. REPRODUCTION OF USE OF THIS CONTENT OR THE DOCUMENT, ADDITIONS OR DELETIONS TO THE CONTENT OR THE DOCUMENT, IN WHOLE OR IN PART, WITHOUT WRITTEN CONSENT OF W.K. DICKSON & CO., INC., IS PROHIBITED. FROM THE ORIGINAL OF THIS DOCUMENT, MARKED WITH AN ORIGINAL SIGNATURE AND SEAL, SHALL BE CONSIDERED TO BE VALID, TRUE COPIES.

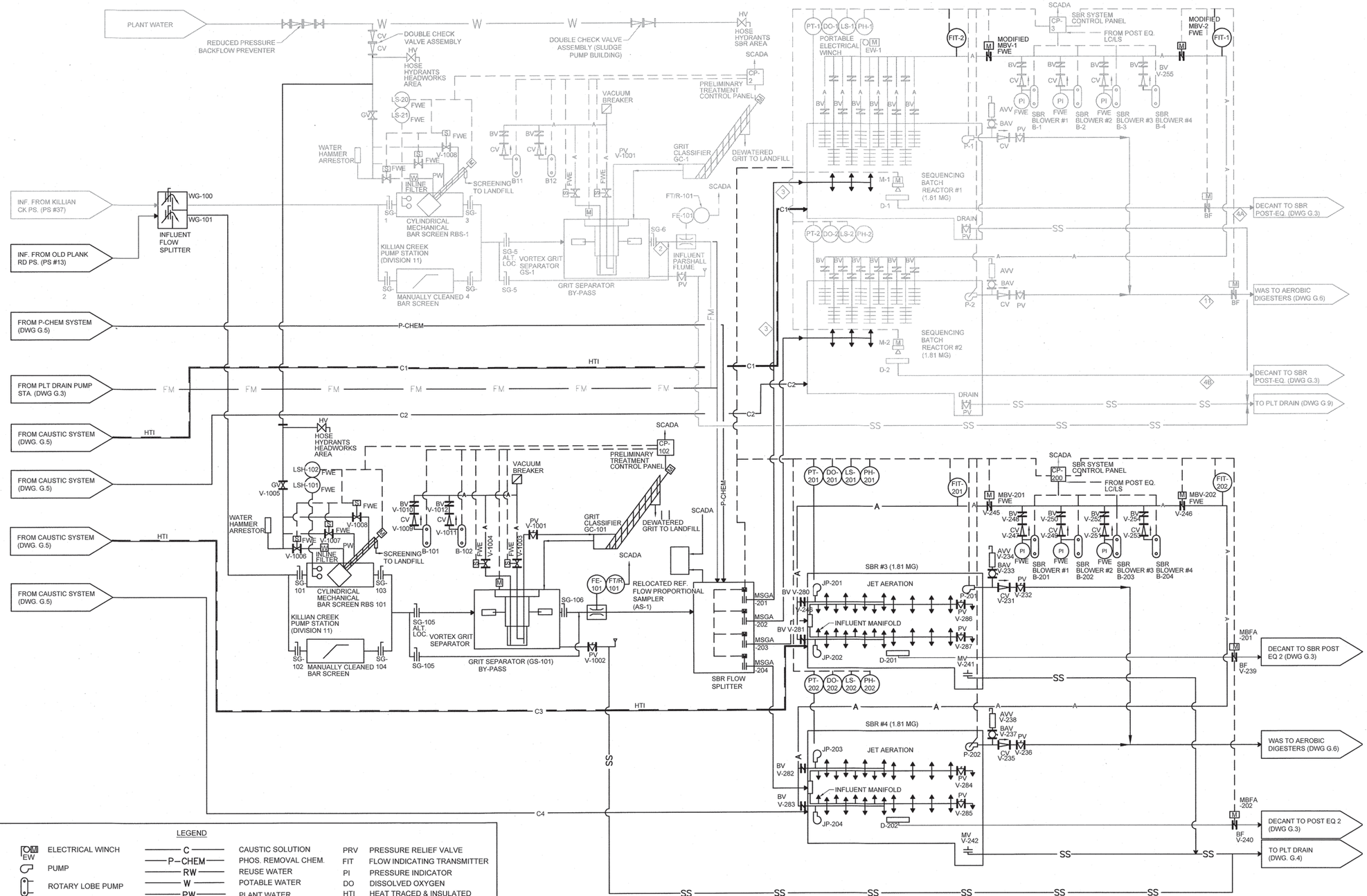

LEGEND

BAV	BALL VALVE	EW	ELECTRICAL WINCH	C	CAUSTIC SOLUTION
MBV	MOTORIZED BUTTERFLY VALVE		PUMP	P-CHEM	PHOS. REMOVAL CHEM.
BV	BUTTERFLY VALVE		ROTARY LOBE PUMP	RW	REUSE WATER
PV	PLUG VALVE		SOLENOID VALVE	W	POTABLE WATER
CV	CHECK VALVE	AVV	AIR/VAC RELIEF VALVE	PW	PLANT WATER
GV	GATE VALVE		SLUICE OR WEIR GATE (MOTOR OPERATED) MSGA/MWG	SS	SANITARY SEWER
MV	MOTOR OPERATED VALVE	SG	SLIDE GATE (HAND OPERATED)	FM	FORCE MAIN
	FINE BUBBLE DIFFUSERS	MV	MUD VALVE	P	POLYMER
	LINE NUMBER		FLOATING MIXER	A	AIR
	PERISTALTIC METERING PUMP		FLOATING DECANTER		

FWE	FURNISHED WITH EQUIPMENT
LIC	LEVEL INDICATING CONTROLLER
LS	LEVEL SWITCH
FE	FLOW ELEMENT
PS	PRESSURE SWITCH
FT/R	FLOW TRANSMITTING/RECORDER
WAS	WASTE ACTIVATED SLUDGE
MSGA	MOTOR OPERATED SLUICE GATE ACTUATOR
RPBFP	REDUCED PRESSURE BACKFLOW PREVENTER
RSP	ROTARY SLUDGE PRESS
T	TIMER
HOA	HAND/OFF/AUTOMATIC SWITCH
PRV	PRESSURE RELIEF VALVE
FIT	FLOW INDICATING TRANSMITTER
PI	PRESSURE INDICATOR
DO	DISSOLVED OXYGEN
HTI	HEAT TRACED & INSULATED
	ROTAMETER
HV	HOSE HYDRANT VALVE
	REDUCER

WK DICKSON
community infrastructure consultants
616 COLONNADE DRIVE
CHARLOTTE, NC 28205
(t)704-334-5348
(f)704-334-0078
WWW.WKDICKSON.COM
NC LICENSE NO.F-0374

NORTH CAROLINA PROFESSIONAL SEAL 8802 ENGINEER CHARLES P. FRONEBERGER

PROFESSIONAL SEAL

REVISION RECORD

NO.	DATE	DESCRIPTION	BY
A	10/9/18	ISSUE FOR OWNER/NCDEQ REVIEW	CRF

- NOT RELEASED FOR CONSTRUCTION -

FINAL DRAWINGS -

PROJECT NAME: KILLIAN CREEK WWTP PHASE 3 UPGRADE

DRAWING TITLE: PROCESS FLOW DIAGRAM - HEADWORKS & SBR

PROJ. MGR.:	CRF
DESIGN BY:	CRF
DRAWN BY:	NS/CH
PROJ. DATE:	SEPT. 2018

DRAWING NUMBER: G.2 OF 168

WKD PROJ. NO.: 20170294.00.CL

COPYRIGHT © 2018 DICKSON CO., INC. ALL RIGHTS RESERVED. REPRODUCTION OR USE OF THIS CONTENTS OF THIS DOCUMENT, ADDITIONS OR MODIFICATIONS TO THIS DOCUMENT WITHOUT WRITTEN PERMISSION IS PROHIBITED. ADDITIONS OR MODIFICATIONS TO THIS DOCUMENT MADE FROM AN ORIGINAL SIGNATURE AND SEAL SHALL BE CONSIDERED TO BE VALID. THE COPIES.

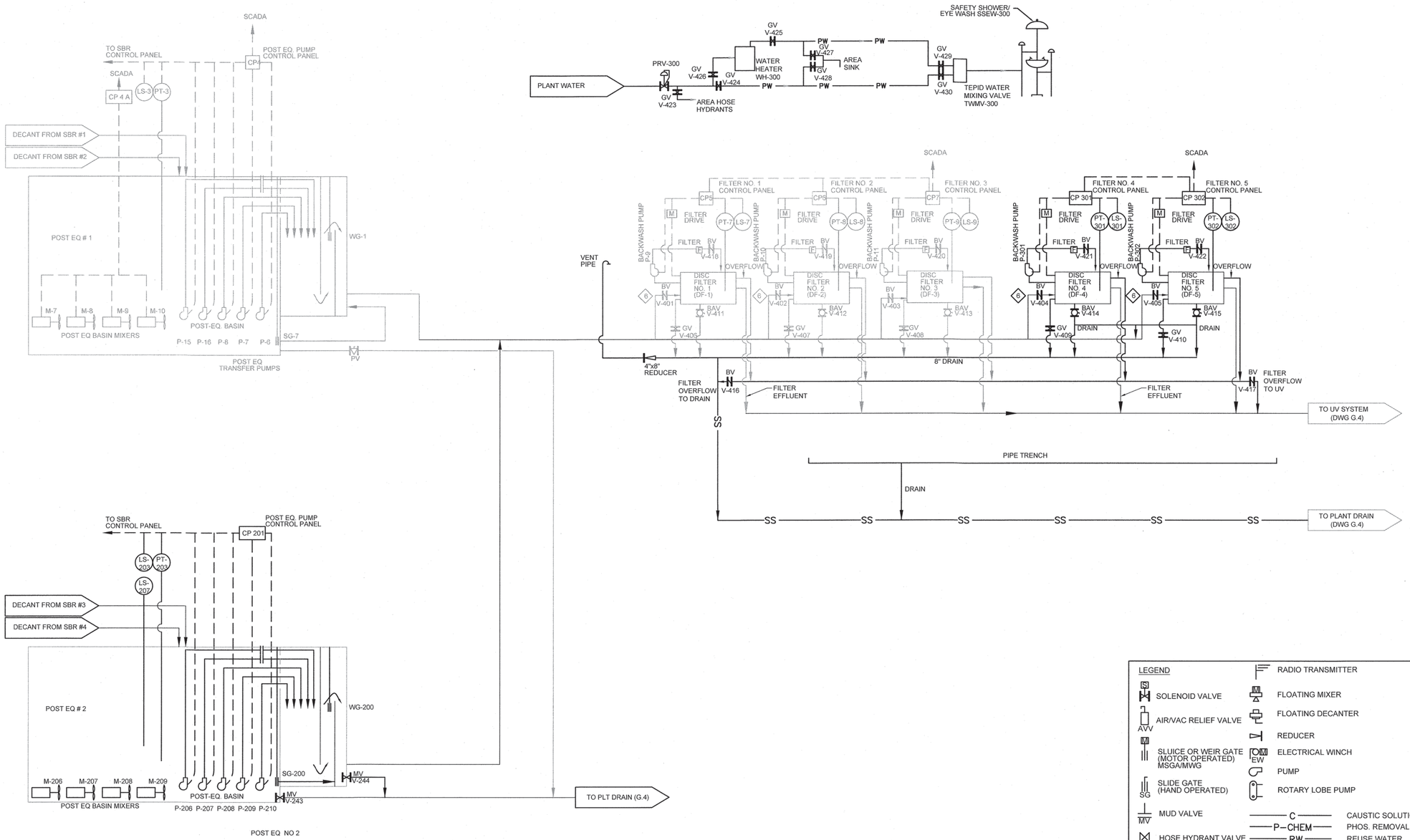

LEGEND

SOLENOID VALVE	
AIR/VAC RELIEF VALVE	AVV
SLUICE OR WEIR GATE (MOTOR OPERATED) MSGA/MWG	
SLIDE GATE (HAND OPERATED)	SG
MUD VALVE	MV
HOSE HYDRANT VALVE	HV
BALL VALVE	BAV
MOTORIZED BUTTERFLY VALVE	MBV
BUTTERFLY VALVE	BV
PLUG VALVE	PV
CHECK VALVE	CV
GATE VALVE	GV
MOTOR OPERATED VALVE	
FINE BUBBLE DIFFUSERS	
LINE NUMBER	
PERISTALTIC METERING PUMP	
RADIO TRANSMITTER	
FLOATING MIXER	
FLOATING DECANTER	
REDUCER	
ELECTRICAL WINCH	EW
PUMP	
ROTARY LOBE PUMP	
C — CAUSTIC SOLUTION	
P-CHEM — PHOS. REMOVAL CHEM.	
RW — REUSE WATER	
W — POTABLE WATER	
PW — PLANT WATER	
SS — SANITARY SEWER	
FM — FORCE MAIN	
P — POLYMER	
A — AIR	
FWE	FURNISHED WITH EQUIPMENT
LIC	LEVEL INDICATING CONTROLLER
LS	LEVEL SWITCH
FE	FLOW ELEMENT
PS	PRESSURE SWITCH
FT/R	FLOW TRANSMITTING/RECORDER
WAS	WASTE ACTIVATED SLUDGE
MSGA	MOTOR OPERATED SLUICE GATE ACTUATOR
RPBFP	REDUCED PRESSURE BACKFLOW PREVENTER
RSP	ROTARY SLUDGE PRESS
T	TIMER
HOA	HAND/OFF/AUTOMATIC SWITCH
PRV	PRESSURE RELIEF VALVE
ROTAMETER	

FINAL DRAWINGS - - NOT RELEASED FOR CONSTRUCTION

WK DICKSON
community infrastructure consultants
616 COLONNADE DRIVE
CHARLOTTE, NC 28205
(t)704-334-5348
(f)704-334-0078
WWW.WKDICKSON.COM
NC LICENSE NO.F-0374

NORTH CAROLINA PROFESSIONAL SEAL 8802 ENGINEER CHARLES F. FRONEBERGER

PROFESSIONAL SEAL

REVISION RECORD

NO.	DATE	DESCRIPTION	BY
A	10/9/18	ISSUE FOR OWNER/NCDEQ REVIEW	CRF

PROJECT NAME: KILLIAN CREEK WWTP PHASE 3 UPGRADE

DRAWING TITLE: PROCESS FLOW DIAGRAM - POST EQ & EFFLUENT FILTERS

PROJ. MGR.:	CRF
DESIGN BY:	CRF
DRAWN BY:	NS/CH
PROJ. DATE:	SEPT. 2018

DRAWING NUMBER:

G.3 OF 168

WKD PROJ. NO.:

20170294.00.CL

COPYRIGHT © THE DOCUMENT, LLC. ALL RIGHTS RESERVED. REPRODUCTION IN WHOLE OR IN PART IN ANY FORM OR MEDIUM WITHOUT EXPRESS WRITTEN PERMISSION OF WK DICKSON IS PROHIBITED. THIS DOCUMENT IS PROPERTY OF WK DICKSON, INC. AND CONTAINS TRADE SECRETS AND PROPRIETARY INFORMATION. REPRODUCTION, DISTRIBUTION OR DISCLOSURE TO OTHERS OF THIS DOCUMENT, IN WHOLE OR IN PART, WITHOUT THE EXPRESS WRITTEN PERMISSION OF WK DICKSON, INC. IS PROHIBITED. ONLY PERSONS DESIGNATED IN WRITING BY THE OWNER OF THIS DOCUMENT, AND THE OWNER, HAVE THE RIGHT TO USE THE INFORMATION CONTAINED IN THIS DOCUMENT. ELECTRONIC COPIES OF THIS DOCUMENT, IF ANY, SHALL BE CONSIDERED TO BE VALID, TRUE COPIES.

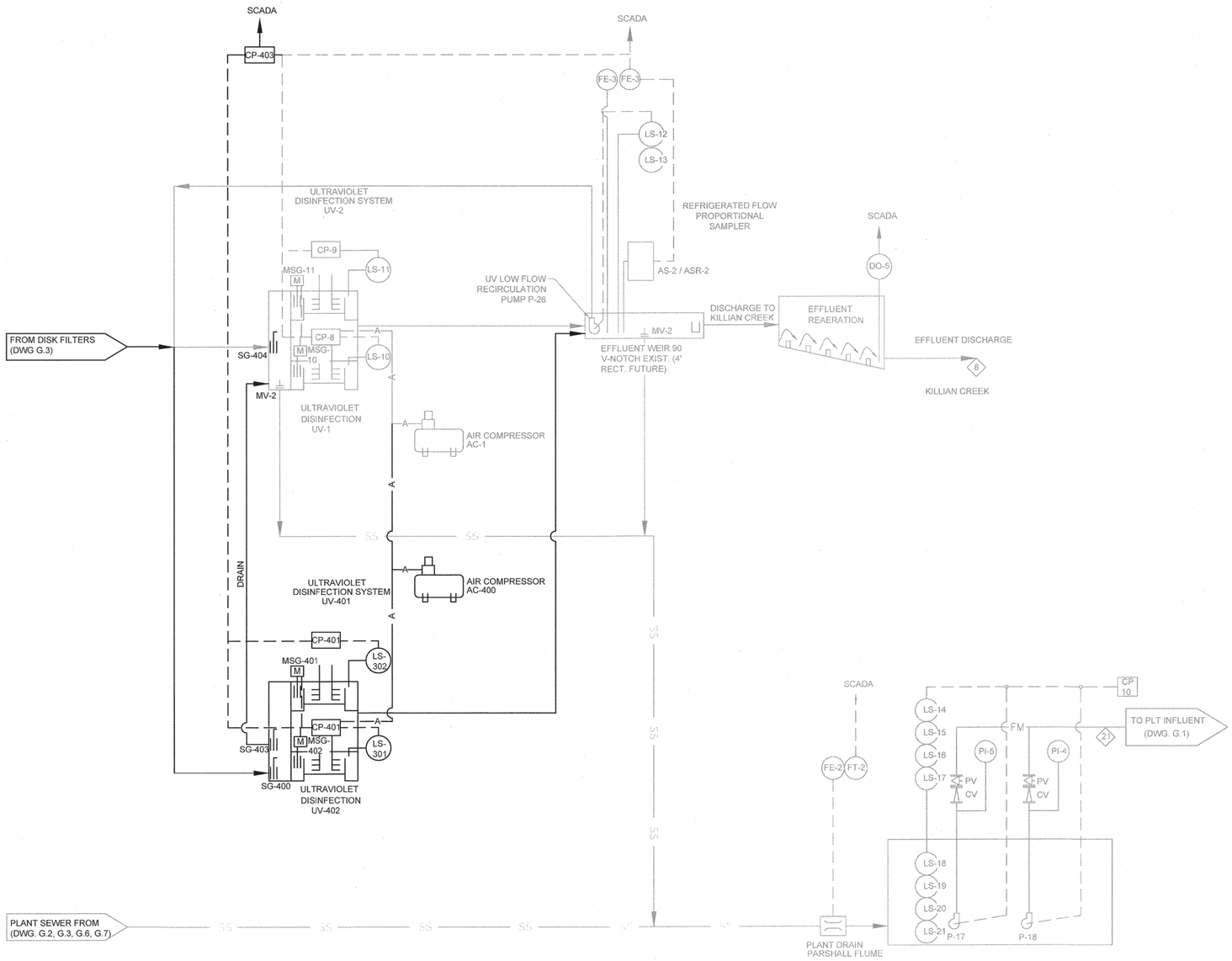

LEGEND

SOLENOID VALVE	RADIO TRANSMITTER
AIR/VAC RELIEF VALVE	FLOATING MIXER
SLUICE OR WEIR GATE (MOTOR OPERATED) MSGA/MWG	FLOATING DECANTER
SLIDE GATE (HAND OPERATED)	REDUCER
MUD VALVE	ELECTRICAL WINCH
HOSE HYDRANT VALVE	PUMP
BALL VALVE	ROTARY LOBE PUMP
MOTORIZED BUTTERFLY VALVE	C — CAUSTIC SOLUTION
BUTTERFLY VALVE	P—CHEM — PHOS. REMOVAL CHEM.
PLUG VALVE	RW — REUSE WATER
CHECK VALVE	W — POTABLE WATER
GATE VALVE	PW — PLANT WATER
MOTOR OPERATED VALVE	SS — SANITARY SEWER
FINE BUBBLE DIFFUSERS	FM — FORCE MAIN
LINE NUMBER	P — POLYMER
PERISTALTIC METERING PUMP	A — AIR
	FWE — FURNISHED WITH EQUIPMENT
	LIC — LEVEL INDICATING CONTROLLER
	LS — LEVEL SWITCH
	FE — FLOW ELEMENT
	PS — PRESSURE SWITCH
	FT/R — FLOW TRANSMITTING/RECORDER
	WAS — WASTE ACTIVATED SLUDGE
	MSGA — MOTOR OPERATED SLUICE GATE ACTUATOR
	RPBFP — REDUCED PRESSURE BACKFLOW PREVENTER
	RSP — ROTARY SLUDGE PRESS
	T — TIMER
	HOA — HAND/OFF/AUTOMATIC SWITCH
	PRV — PRESSURE RELIEF VALVE
	ROTAMETER

FINAL DRAWINGS - - NOT RELEASED FOR CONSTRUCTION

WK DICKSON
community infrastructure consultants
616 COLONNADE DRIVE
CHARLOTTE, NC 28205
(t)704-334-5348
(f)704-334-0078
WWW.WKDICKSON.COM
NC LICENSE NO.F-0374

NORTH CAROLINA PROFESSIONAL ENGINEER SEAL 8802 CHARLES R. FRONEBERGER

PROFESSIONAL SEAL

REVISION RECORD

NO.	DATE	DESCRIPTION	BY
A	10/9/18	ISSUE FOR OWNER/NCDEQ REVIEW	CRF

PROJECT NAME: KILLIAN CREEK WWTP PHASE 3 UPGRADE

DRAWING TITLE: PROCESS FLOW DIAGRAM - UV DISINFECTION REAERATION PLANT PS

PROJ. MGR.:	CRF
DESIGN BY:	CRF
DRAWN BY:	NS/CH
PROJ. DATE:	SEPT. 2018

DRAWING NUMBER:

G.4 OF 168

WKD PROJ. NO.: 20170294.00.CL

COPYRIGHT © W.K. DICKSON & CO., INC. ALL RIGHTS RESERVED. REPRODUCTION OR USE OF THE CONTENTS OF THIS DOCUMENT, ADDITIONS OR REVISIONS THERETO, IN WHOLE OR IN PART, WITHOUT WRITTEN CONSENT OF W.K. DICKSON & CO., INC., IS PROHIBITED. ONLY COPIES FROM THE ORIGINAL MASTER OF THIS DOCUMENT BEARING WITH AN ORIGINAL SIGNATURE AND SEAL SHALL BE CONSIDERED TO BE VALID, TRUE COPIES.

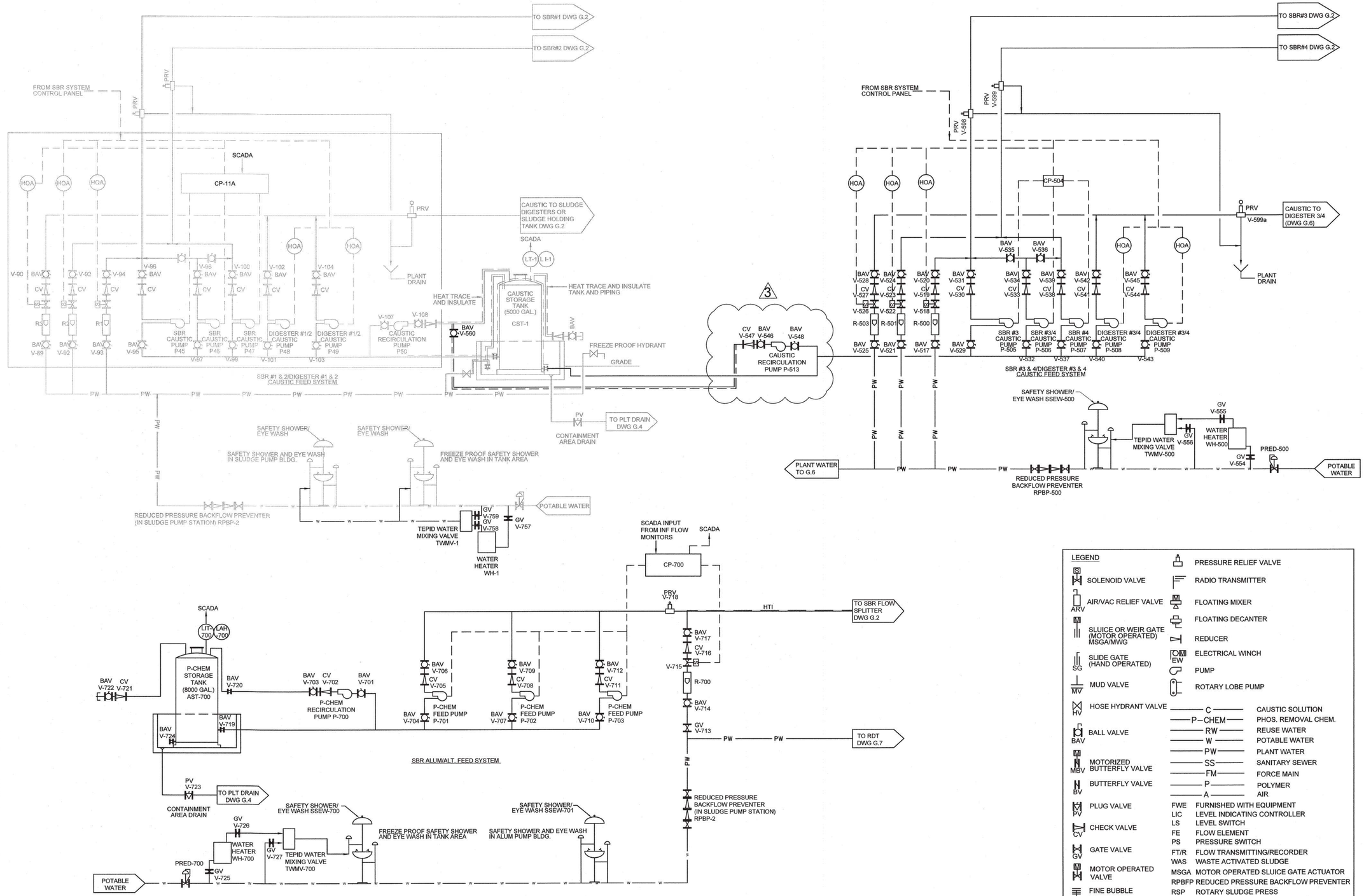

LEGEND

SOLENOID VALVE	PRESSURE RELIEF VALVE
AIR/VAC RELIEF VALVE	RADIO TRANSMITTER
SLUICE OR WEIR GATE (MOTOR OPERATED) MSGA/MWG	FLOATING MIXER
SLIDE GATE (HAND OPERATED)	FLOATING DECANTER
MUD VALVE	REDUCER
HOSE HYDRANT VALVE	ELECTRICAL WINCH
BALL VALVE	PUMP
MOTORIZED BUTTERFLY VALVE	ROTARY LOBE PUMP
BUTTERFLY VALVE	C — CAUSTIC SOLUTION
PLUG VALVE	P-CHEM — PHOS. REMOVAL CHEM.
CHECK VALVE	RW — REUSE WATER
GATE VALVE	W — POTABLE WATER
MOTOR OPERATED VALVE	PW — PLANT WATER
FINE BUBBLE DIFFUSERS	SS — SANITARY SEWER
LINE NUMBER	FM — FORCE MAIN
PERISTALTIC METERING PUMP	P — POLYMER
PRESSURE REDUCING VALVE	A — AIR
	FWE — FURNISHED WITH EQUIPMENT
	LIC — LEVEL INDICATING CONTROLLER
	LS — LEVEL SWITCH
	FE — FLOW ELEMENT
	PS — PRESSURE SWITCH
	FT/R — FLOW TRANSMITTING/RECORDER
	WAS — WASTE ACTIVATED SLUDGE
	MSGA — MOTOR OPERATED SLUICE GATE ACTUATOR
	RPBFP — REDUCED PRESSURE BACKFLOW PREVENTER
	RSP — ROTARY SLUDGE PRESS
	T — TIMER
	HOA — HAND/OFF/AUTOMATIC SWITCH
	PRV — PRESSURE RELIEF VALVE
	ROTAMETER

FINAL DRAWINGS - NOT RELEASED FOR CONSTRUCTION

WK DICKSON
community infrastructure consultants
616 COLONNADE DRIVE
CHARLOTTE, NC 28205
(t)704-334-5348
(f)704-334-0078
WWW.WKDICKSON.COM
NC LICENSE NO.F-0374

NORTH CAROLINA PROFESSIONAL SEAL ENGINEER 8802 CHARLES R. FRONEBERGER

PROFESSIONAL SEAL

REVISION RECORD

NO.	DATE	DESCRIPTION	BY
1.	10/9/18	ISSUE FOR OWNER/NCDEQ REVIEW	CRF
2.	5/21/19	REVISED VALVES	WBK
3.	12/17/19	REVISIONS PER NCDEQ REVIEW	RWH

PROJECT NAME: KILLIAN CREEK WWTP PHASE 3 UPGRADE

DRAWING TITLE: PROCESS FLOW DIAGRAM - CAUSTIC & ALUM CHEMICAL FEED SYSTEMS

PROJ. MGR.:	CRF
DESIGN BY:	CRF
DRAWN BY:	NS/CH
PROJ. DATE:	SEPT. 2018

DRAWING NUMBER:

G.5 OF 168

WKD PROJ. NO.: 20170294.00.CL

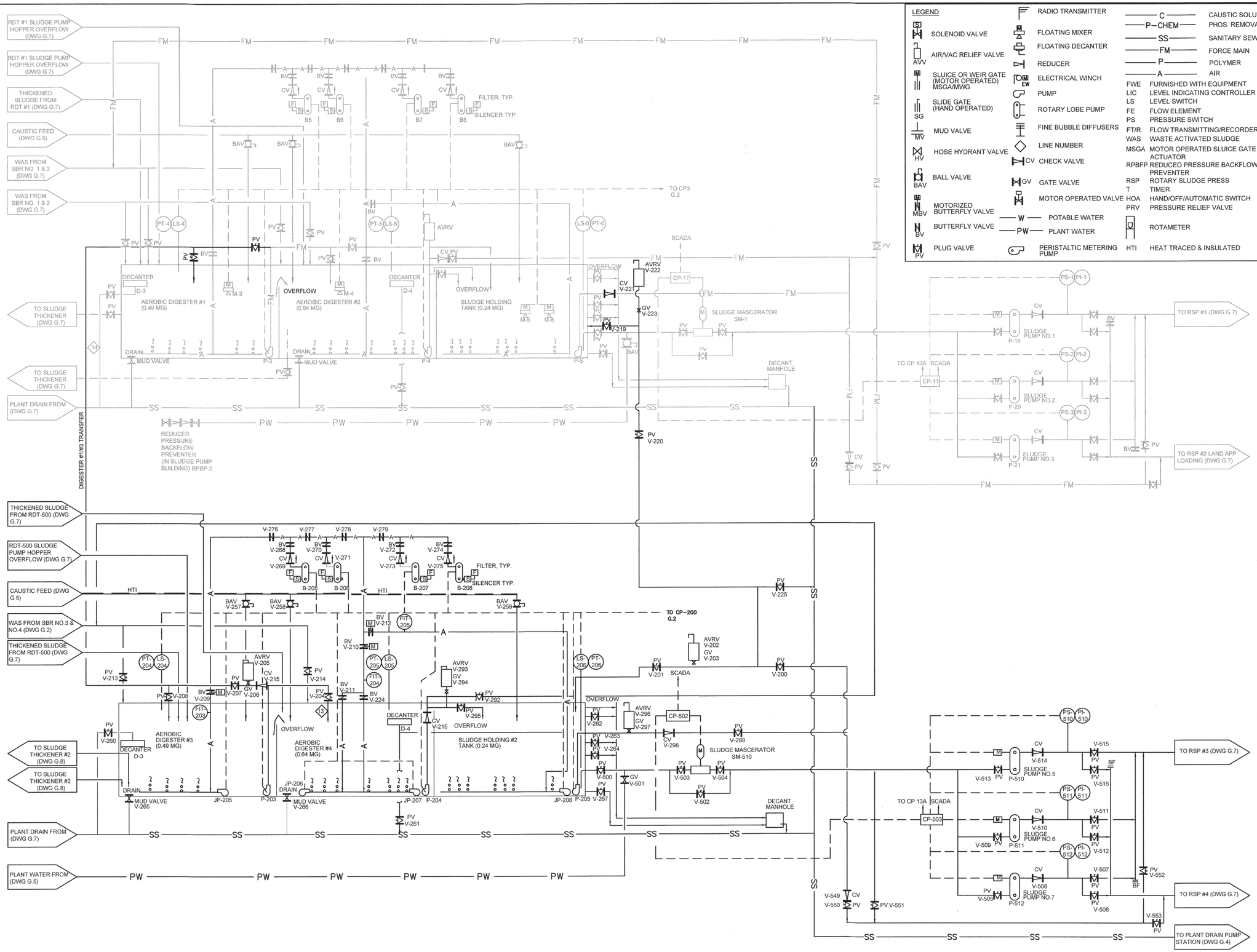

LEGEND

SOLENOID VALVE	RADIO TRANSMITTER	C	CAUSTIC SOLUTION		
AIR/VAC RELIEF VALVE	FLOATING MIXER	P-CHEM	PHOS. REMOVAL CHEM		
SLUICE OR WEIR GATE (MOTOR OPERATED) MSGA/MWG	FLOATING DECANTER	SS	SANITARY SEWER		
SLIDE GATE (HAND OPERATED)	REDUCER	FM	FORCE MAIN		
MUD VALVE	ELECTRICAL WINCH	P	POLYMER		
HOSE HYDRANT VALVE	PUMP	A	AIR		
BALL VALVE	ROTARY LOBE PUMP			FWE	FURNISHED WITH EQUIPMENT
MOTORIZED BUTTERFLY VALVE	FINE BUBBLE DIFFUSERS			LIC	LEVEL INDICATING CONTROLLER
BUTTERFLY VALVE	LINE NUMBER			LS	LEVEL SWITCH
PLUG VALVE	CHECK VALVE			FE	FLOW ELEMENT
	GATE VALVE			PS	PRESSURE SWITCH
	MOTOR OPERATED VALVE			FT/R	FLOW TRANSMITTING/RECORDER
	POTABLE WATER			WAS	WASTE ACTIVATED SLUDGE
	PLANT WATER			MSGA	MOTOR OPERATED SLUICE GATE ACTUATOR
	PERISTALTIC METERING PUMP			RPBFP	REDUCED PRESSURE BACKFLOW PREVENTER
				RSP	ROTARY SLUDGE PRESS
				T	TIMER
				HOA	HAND/OFF/AUTOMATIC SWITCH
				PRV	PRESSURE RELIEF VALVE
					ROTAMETER
				HTI	HEAT TRACED & INSULATED

WK DICKSON
community infrastructure consultants
616 COLONNADE DRIVE
CHARLOTTE, NC 28205
(t)704-334-5348
(f)704-334-0078
WWW.WKDICKSON.COM
NC LICENSE NO.F-0374

NORTH CAROLINA PROFESSIONAL ENGINEER SEAL 19802 CHARLES R. FRONHEISER

PROFESSIONAL SEAL

REVISION RECORD

NO.	DATE	DESCRIPTION	BY
A	10/9/18	ISSUE FOR OWNER/NCDEQ REVIEW	CRF

- NOT RELEASED FOR CONSTRUCTION -

FINAL DRAWINGS -

PROJECT NAME: KILLIAN CREEK WWTP PHASE 3 UPGRADE

DRAWING TITLE: PROCESS FLOW DIAGRAM - AEROBIC DIGESTERS & SLUDGE PUMP STA

PROJ. MGR.:	CRF
DESIGN BY:	CRF
DRAWN BY:	NS/CH
PROJ. DATE:	SEPT. 2018

DRAWING NUMBER: G.6 OF 168

WKD PROJ. NO.: 20170294.00.CL

COPYRIGHT © WK DICKSON & CO., INC., ALL RIGHTS RESERVED. REPRODUCTION OF ME IN PROPERTY OF THE COMPANY. DESTROYED OR RETURNED ON REQUEST. THIS DOCUMENT MAY NOT BE REPRODUCED OR DISTRIBUTED WITHOUT WRITTEN PERMISSION. ELECTRONIC FILES THE ORIGINAL OF THIS DOCUMENT MARKED WITH AN ORIGINAL SIGNATURE AND SEAL SHALL BE CONSIDERED TO BE VALID, TRUE COPIES.

COPYRIGHT © WK DICKSON & CO., INC. ALL RIGHTS RESERVED. REPRODUCTION OR USE OF THE CONTENTS OF THIS DOCUMENT, ADDITIONS OR MODIFICATIONS THERETO, IN WHOLE OR IN PART, WITHOUT WRITTEN PERMISSION OF WK DICKSON & CO., INC. IS PROHIBITED. FROM THE ORIGINAL OF THIS DOCUMENT MARKED WITH AN ORIGINAL SIGNATURE AND SEAL SHALL BE CONSIDERED TO BE VALID. TRUE COPIES.

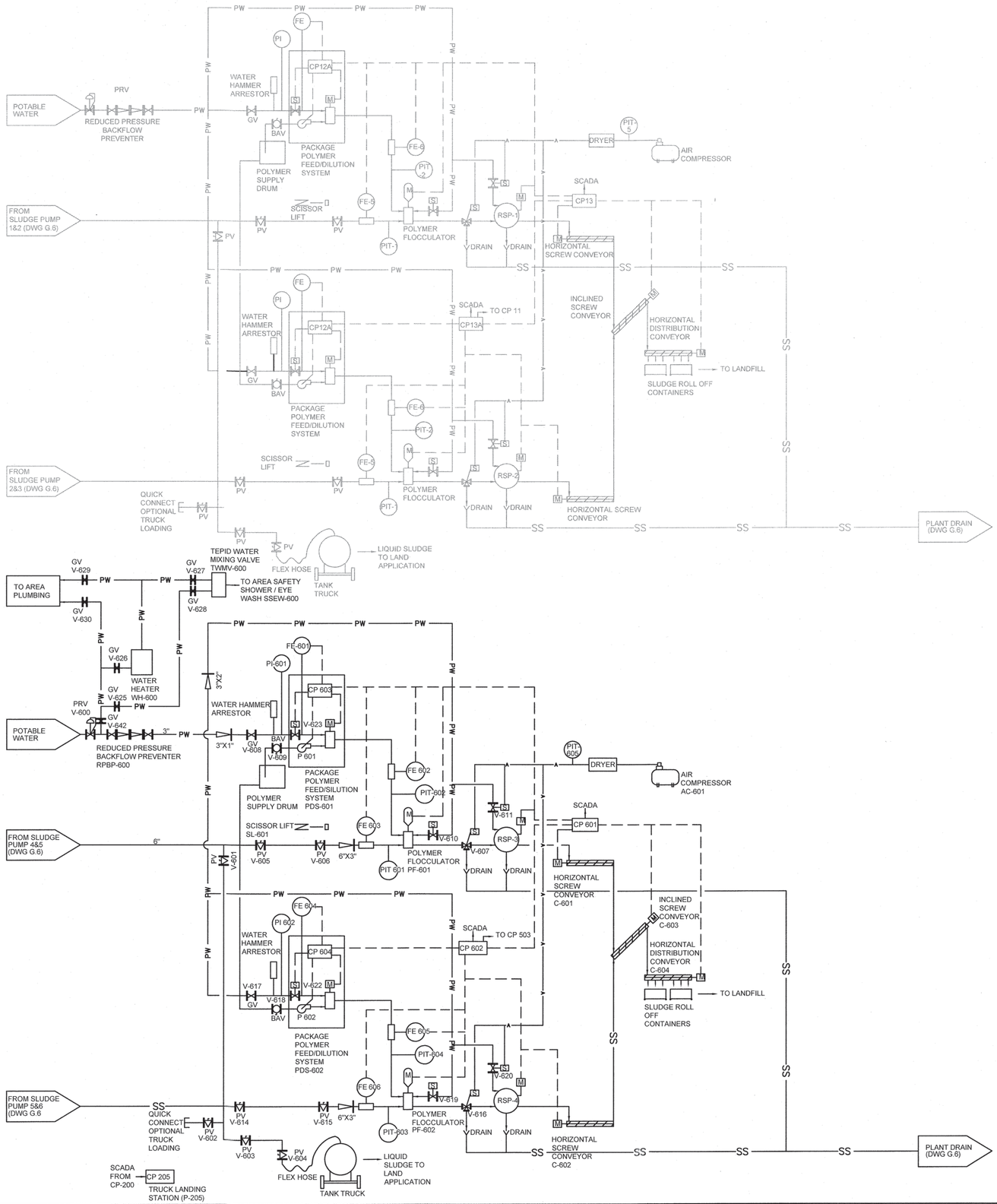

LEGEND

- SOLENOID VALVE
- AIR/VAC RELIEF VALVE
- SLUICE OR WEIR GATE (MOTOR OPERATED) MSGA/MWG
- SLIDE GATE (HAND OPERATED)
- MUD VALVE
- HOSE HYDRANT VALVE
- BALL VALVE
- MOTORIZED BUTTERFLY VALVE
- BUTTERFLY VALVE
- PLUG VALVE
- CHECK VALVE
- GATE VALVE
- MOTOR OPERATED VALVE
- FINE BUBBLE DIFFUSERS
- LINE NUMBER
- PERISTALTIC METERING PUMP
- RADIO TRANSMITTER
- FLOATING MIXER
- FLOATING DECANTER
- REDUCER
- ELECTRICAL WINCH
- PUMP
- ROTARY LOBE PUMP
- C — CAUSTIC SOLUTION
- P-CHEM — PHOS. REMOVAL CHEM.
- RW — REUSE WATER
- W — POTABLE WATER
- PW — PLANT WATER
- SS — SANITARY SEWER
- FM — FORCE MAIN
- P — POLYMER
- A — AIR

FWE	FURNISHED WITH EQUIPMENT
LIC	LEVEL INDICATING CONTROLLER
LS	LEVEL SWITCH
FE	FLOW ELEMENT
PS	PRESSURE SWITCH
FT/R	FLOW TRANSMITTING/RECORDER
WAS	WASTE ACTIVATED SLUDGE
MSGA	MOTOR OPERATED SLUICE GATE ACTUATOR
RPBFP	REDUCED PRESSURE BACKFLOW PREVENTER
RSP	ROTARY SLUDGE PRESS
T	TIMER
HOA	HAND/OFF/AUTOMATIC SWITCH
PRV	PRESSURE RELIEF VALVE
	ROTAMETER

WK DICKSON
community infrastructure consultants
616 COLONNADE DRIVE
CHARLOTTE, NC 28205
(t)704-334-5348
(f)704-334-0078
WWW.WKDICKSON.COM
NC LICENSE NO.F-0374

NORTH CAROLINA PROFESSIONAL SEAL 8802 ENGINEER CHARLES F. FRONEBERGER

PROFESSIONAL SEAL

REVISION RECORD

NO.	DATE	DESCRIPTION	BY
A	10/9/18	ISSUE FOR OWNER/NCDEQ REVIEW	CRF

- NOT RELEASED FOR CONSTRUCTION -

FINAL DRAWINGS -

PROJECT NAME: KILLIAN CREEK WWTP PHASE 3 UPGRADE

DRAWING TITLE: PROCESS FLOW DIAGRAM - SLUDGE DEWATERING

PROJ. MGR.:	CRF
DESIGN BY:	CRF
DRAWN BY:	NS/CH
PROJ. DATE:	SEPT. 2018

DRAWING NUMBER: G.7 OF 168

WKD PROJ. NO.: 20170294.00.CL

COPYRIGHT © W.K. DICKSON & CO., INC., ALL RIGHTS RESERVED. REPRODUCTION OR USE OF THE CONTENTS OF THIS DOCUMENT, IN WHOLE OR IN PART, WITHOUT WRITTEN PERMISSION OF W.K. DICKSON & CO., INC., IS PROHIBITED. ALL REPRODUCTIONS MUST BE MADE FROM THE ORIGINAL OF THE DOCUMENT MARKED WITH AN ORIGINAL SIGNATURE AND SEAL SHALL BE CONSIDERED TO BE VALID, TRUE COPIES.

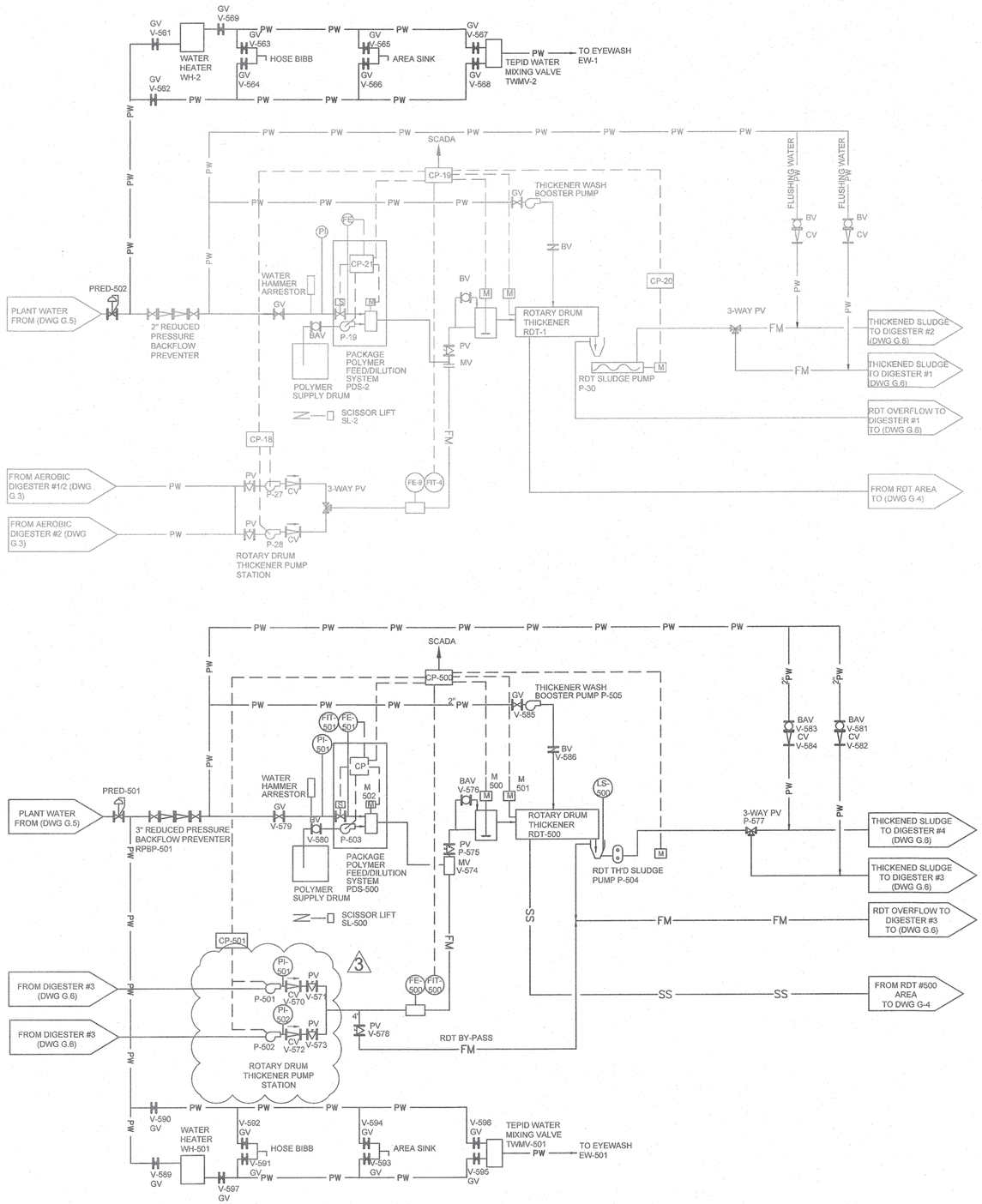

LEGEND

SOLENOID VALVE	PRESSURE RELIEF VALVE
AIR/VAC RELIEF VALVE	RADIO TRANSMITTER
SLUICE OR WEIR GATE (MOTOR OPERATED) MSGA/MWG	FLOATING MIXER
SLIDE GATE (HAND OPERATED)	FLOATING DECANTER
MUD VALVE	REDUCER
HOSE HYDRANT VALVE	ELECTRICAL WINCH
BALL VALVE	PUMP
MOTORIZED BUTTERFLY VALVE	ROTARY LOBE PUMP
BUTTERFLY VALVE	C — CAUSTIC SOLUTION
PLUG VALVE	P—CHEM — PHOS. REMOVAL CHEM.
CHECK VALVE	RW — REUSE WATER
GATE VALVE	W — POTABLE WATER
MOTOR OPERATED VALVE	PW — PLANT WATER
FINE BUBBLE DIFFUSERS	SS — SANITARY SEWER
LINE NUMBER	FM — FORCE MAIN
PERISTALTIC METERING PUMP	P — POLYMER
PRESSURE REDUCING VALVE	A — AIR
3-WAY PLUG VALVE	ROTAMETER

FWE	FURNISHED WITH EQUIPMENT
LIC	LEVEL INDICATING CONTROLLER
LS	LEVEL SWITCH
FE	FLOW ELEMENT
PS	PRESSURE SWITCH
FT/R	FLOW TRANSMITTING/RECORDER
WAS	WASTE ACTIVATED SLUDGE
MSGA	MOTOR OPERATED SLUICE GATE ACTUATOR
RPBFP	REDUCED PRESSURE BACKFLOW PREVENTER
RSP	ROTARY SLUDGE PRESS
T	TIMER
HOA	HAND/OFF/AUTOMATIC SWITCH
PRV	PRESSURE RELIEF VALVE

WK DICKSON
community infrastructure consultants
616 COLONNADE DRIVE
CHARLOTTE, NC 28205
(t)704-334-5348
(f)704-334-0078
WWW.WKDICKSON.COM
NC LICENSE NO.F-0374

NORTH CAROLINA PROFESSIONAL ENGINEER SEAL 8802 CHARLES R. FRONEBERGER 12-14-18

PROFESSIONAL SEAL

REVISION RECORD

NO.	DATE	DESCRIPTION	BY
1.	10/9/18	ISSUE FOR OWNER/NCDEQ REVIEW	CRF
2.	5/21/19	REVISED VALVES AND RDT PUMP NUMBERS	WBK
3.	11/11/19	REVISED PER NCDEQ REVIEW	CRF

PROJECT NAME: KILLIAN CREEK WWTP PHASE 3 UPGRADE

DRAWING TITLE: PROCESS FLOW DIAGRAM - SLUDGE THICKENERS

- NOT RELEASED FOR CONSTRUCTION -

FINAL DRAWINGS -

PROJ. MGR.:	CRF
DESIGN BY:	CRF
DRAWN BY:	NS/CH
PROJ. DATE:	SEPT. 2018

DRAWING NUMBER:

G.8 OF 168

WKD PROJ. NO.: 20170294.00.CL

COPYRIGHT © WK DICKSON & CO., INC., ALL RIGHTS RESERVED. REPRODUCTION OR USE OF THE CONTENTS OF THIS DOCUMENT, ADDITIONS OR MODIFICATIONS THERETO, IN WHOLE OR IN PART, WITHOUT WRITTEN CONSENT OF WK DICKSON IS PROHIBITED. COPIES MADE FROM THE ORIGINAL OF THIS DOCUMENT, MARKED WITH AN ORIGINAL SIGNATURE AND SEAL SHALL BE CONSIDERED TO BE VALID, TRUE COPIES.

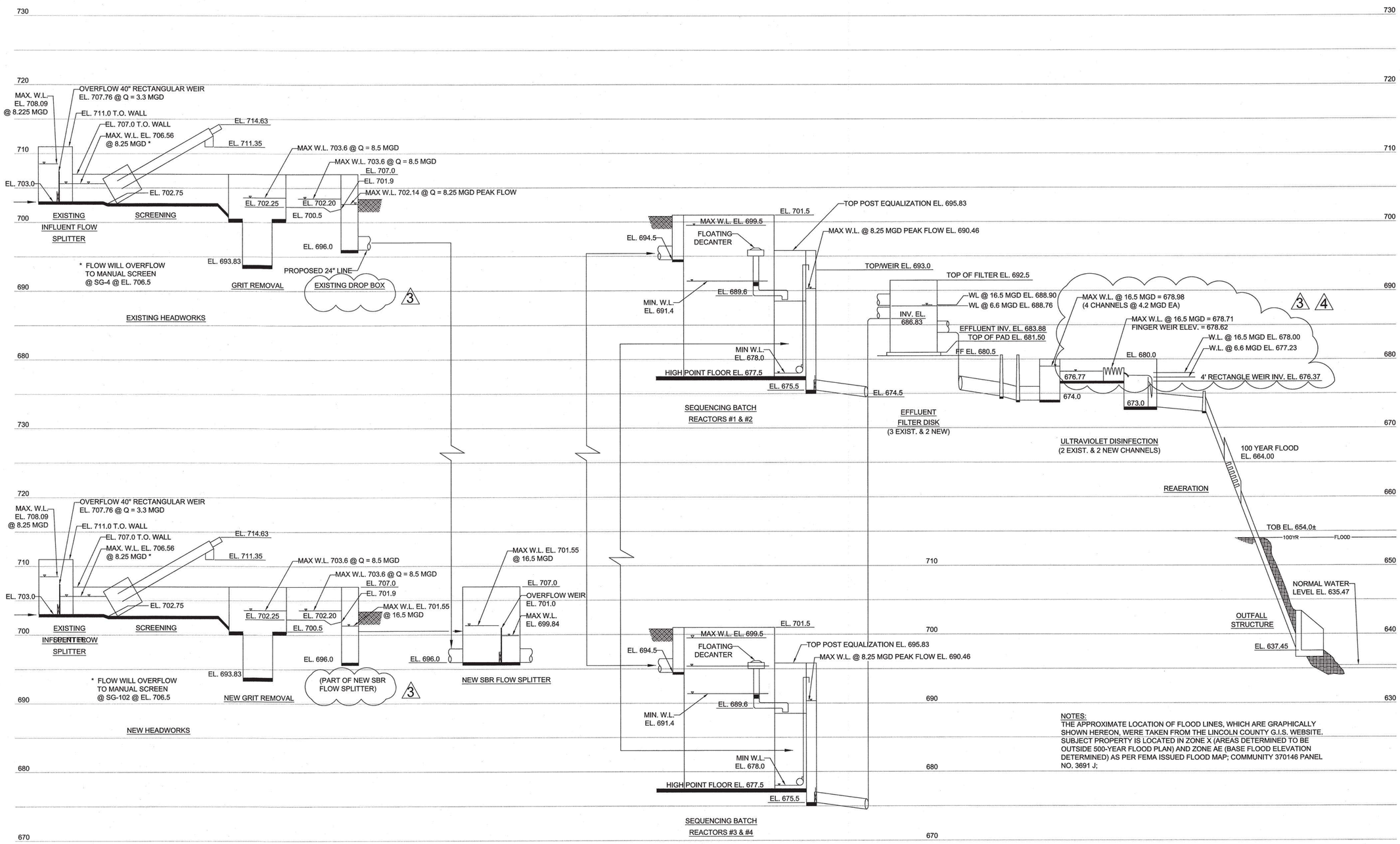

NOTES:
THE APPROXIMATE LOCATION OF FLOOD LINES, WHICH ARE GRAPHICALLY SHOWN HEREON, WERE TAKEN FROM THE LINCOLN COUNTY G.I.S. WEBSITE. SUBJECT PROPERTY IS LOCATED IN ZONE X (AREAS DETERMINED TO BE OUTSIDE 500-YEAR FLOOD PLAN) AND ZONE AE (BASE FLOOD ELEVATION DETERMINED) AS PER FEMA ISSUED FLOOD MAP; COMMUNITY 370146 PANEL NO. 3691 J;

HYDRAULIC PROFILE

NOT TO SCALE

NOTE:
ELEVATIONS FOR THE KILLIAN CREEK PHASE 3 UPGRADE ARE BASED ON THE NAVD88 DATUM.

ELEVATIONS UTILIZED IN 2009 AND 2015 PLANT CONSTRUCTION WERE BASED UPON NGVD29. ELEVATIONS OF EXISTING STRUCTURES AND PIPING HAVE BEEN ADJUSTED TO REFLECT THE NAVD88 DATUM.

FILE:P:\Proposals\JACO\20170294\00_ Killian Creek WWTP Ph 3 Upgrade Const\CADD\Plan Sets\01170294_G_SHT_Hydraulic Profile.dwg; Proposals\JACO\20170294\00_ Killian Creek WWTP Ph 3 Upgrade Const\CADD\Plan Sets\01170294_G_SHT_Hydraulic Profile.dwg; CHEVON, 10/17/2019 11:40:28 AM

- FINAL DRAWINGS -

- NOT RELEASED FOR CONSTRUCTION

WK DICKSON
community infrastructure consultants
616 COLONNADE DRIVE
CHARLOTTE, NC 28205
(t)704-334-5348
(f)704-334-0078
WWW.WKDICKSON.COM
NC LICENSE NO.F-0374

NORTH CAROLINA PROFESSIONAL ENGINEER SEAL 8802 CHARLES R. FRONEBERGER 12-17-19

PROFESSIONAL SEAL

REVISION RECORD

NO.	DATE	DESCRIPTION	BY
1	10/9/18	ISSUE FOR OWNER/NCDEQ REVIEW	CRF
2	9/17/19	REVISED AND ADD EXISTING AND PROPOSED BUILDING NAMES	RWH
3	11/11/19	REVISED PER NCDEQ REVIEW	CRF
4	12/17/19	REVISED PER NCDEQ REVIEW	RWH

PROJECT NAME: KILLIAN CREEK WWTP PHASE 3 UPGRADE

DRAWING TITLE: HYDRAULIC PROFILE

PROJ. MGR.:	CRF
DESIGN BY:	CRF
DRAWN BY:	NS/CH
PROJ. DATE:	SEPT. 2018

DRAWING NUMBER:

G.9 OF 168

WKD PROJ. NO.:

20170294.00.CL

COPYRIGHT © W.K. DICKSON & CO., INC., ALL RIGHTS RESERVED. REPRODUCTION OR USE OF THE CONTENTS OF THIS DOCUMENT WITHOUT WRITTEN PERMISSION IS PROHIBITED. THIS DOCUMENT IS INTENDED FOR USE BY THE OWNER AND AUTHORIZED REPRESENTATIVES. ANY OTHER USE OR DISTRIBUTION IS PROHIBITED WITHOUT WRITTEN CONSENT OF W.K. DICKSON & CO., INC. "PROVISIONAL" ONLY COPIES MAY BE USED FOR REVIEW PURPOSES. ONLY COPIES FROM THE ORIGINAL OF THIS DOCUMENT MARKED WITH AN ORIGINAL SIGNATURE AND SEAL ARE TO BE CONSIDERED TRUE AND ACCURATE COPIES.

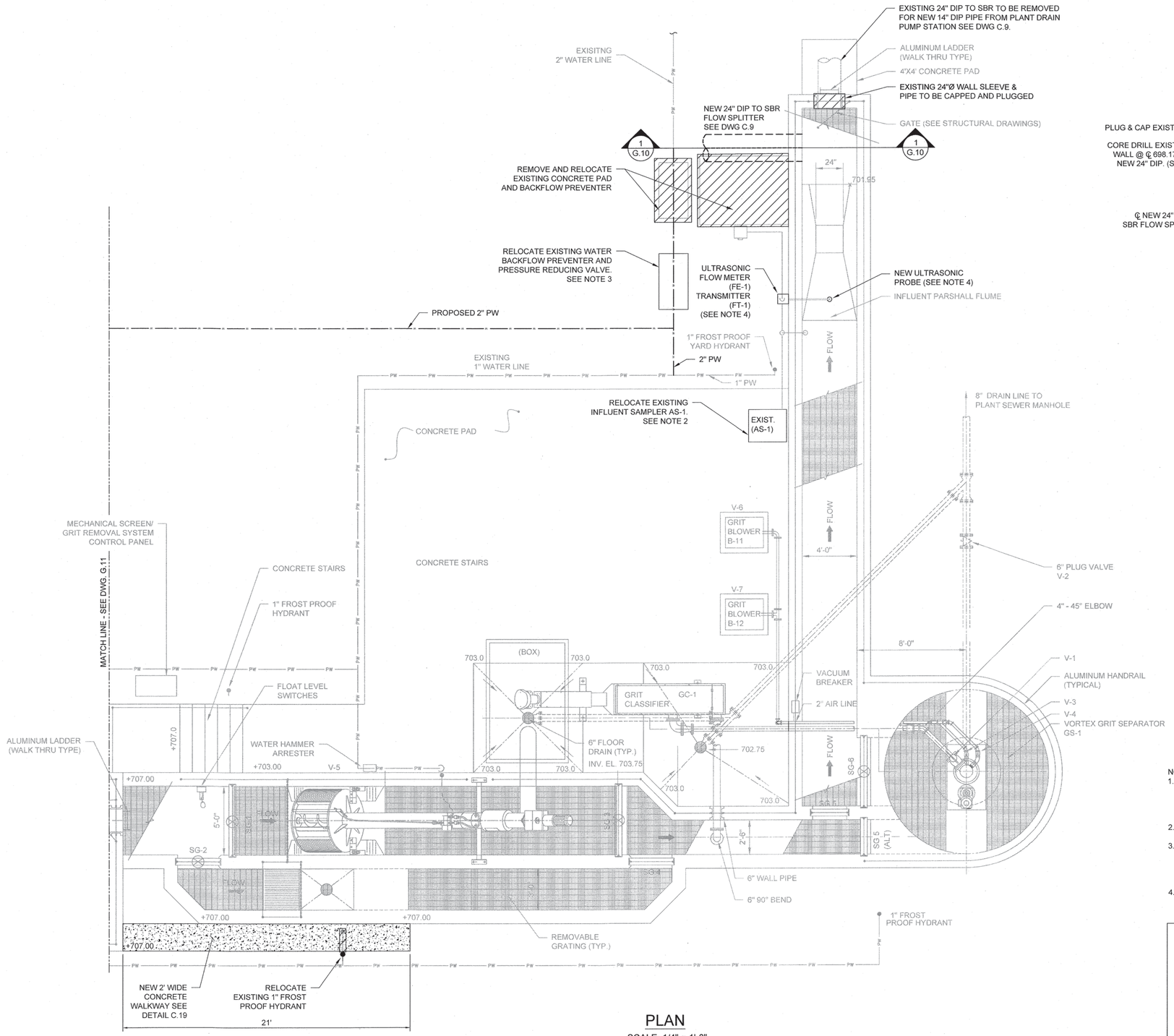

PLAN

SCALE: 1/4" = 1'-0"

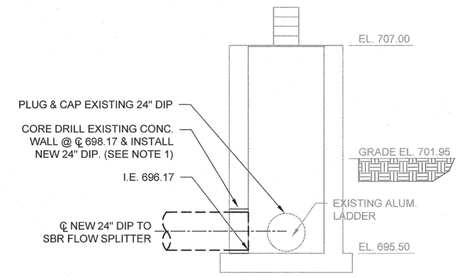

SECTION

SCALE: 1/4" = 1'-0"

NOTE:
ELEVATIONS FOR THE KILLIAN CREEK PHASE 3 UPGRADE ARE BASED ON THE NAVD88 DATUM.

ELEVATIONS UTILIZED IN 2009 AND 2015 PLANT CONSTRUCTION WERE BASED UPON NGVD29. ELEVATIONS OF EXISTING STRUCTURES AND PIPING HAVE BEEN ADJUSTED TO REFLECT THE NAVD88 DATUM.

NOTES:
1. LINK SEALS SHALL BE INSTALLED EACH SIDE OF THE WALL PENETRATION AND SHALL HAVE EPDM ELEMENTS WITH 316 STAINLESS STEEL NUTS & BOLTS SIZED FOR THE PIPE. PENETRATION TO BE FILLED WITH NON-SHRINK GROUT AFTER LINK SEAL INSTALLATION.
2. EXISTING INFLUENT SAMPLER IS TO BE RELOCATED TO THE NEW SBR FLOW SPLITTER BASIN AREA PER DWG G.14.
3. EXISTING WATER BACKFLOW PREVENTER IS TO BE RELOCATED AS REQUIRED FOR CONSTRUCTION OF NEW 24-INCH LINE TO SBR FLOW SPLITTER. RELOCATION IS TO BE COORDINATED WITH PLANT OPERATION TO MINIMIZE LOSS OF WATER TO HEADWORKS EQUIPMENT.
4. THE EXISTING ULTRASONIC PROBE AND FLOW METER ARE TO BE REPLACED WITH NEW ULTRASONIC LEVEL SENSOR WITH WIRING TO NEW MULTI-CHANNEL FLOW METER AT NEW PARSHALL FLUME. SEE SPEC 40 91 16.

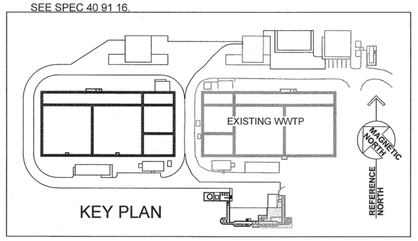

KEY PLAN

FINAL DRAWINGS - NOT RELEASED FOR CONSTRUCTION

WK DICKSON
community infrastructure consultants
616 COLONNADE DRIVE
CHARLOTTE, NC 28205
(t)704-334-5348
(f)704-334-0078
WWW.WKDICKSON.COM
NC LICENSE NO.F-0374

NORTH CAROLINA PROFESSIONAL SEAL 8802 ENGINEER CHARLES F. FROWEEBERGER

PROFESSIONAL SEAL

REVISION RECORD

NO.	DATE	DESCRIPTION	BY
A	10/9/18	ISSUE FOR OWNER/NCDEQ REVIEW	CRF

PROJECT NAME: KILLIAN CREEK WWTP PHASE 3 UPGRADE

DRAWING TITLE: EXISTING HEADWORKS MODIFICATIONS

PROJ. MGR.:	CRF
DESIGN BY:	CRF
DRAWN BY:	NS/CH
PROJ. DATE:	SEPT. 2018

DRAWING NUMBER:

G.10 OF 168

WKD PROJ. NO.:

20170294.00.CL

COPYRIGHT © W.K. DICKSON & CO., INC. & SUBSIDIARY COMPANIES CONTROLLED BY THE COMPANY. THIS DOCUMENT, DESIGN OR DATA IS THE PROPERTY OF W.K. DICKSON & CO., INC. & SUBSIDIARY COMPANIES CONTROLLED BY THE COMPANY. IT IS NOT TO BE REPRODUCED OR COPIED, IN WHOLE OR IN PART, WITHOUT WRITTEN CONSENT OF W.K. DICKSON & CO., INC. & SUBSIDIARY COMPANIES CONTROLLED BY THE COMPANY. ANY REPRODUCTION OR COPY MUST BEAR THE ORIGINAL SIGNATURE AND SEAL WHICH WE CONSIDER TO BE VALID, WHILE COPIES FROM THE ORIGINAL OF THIS DOCUMENT BEARING THE ORIGINAL SIGNATURE AND SEAL WHICH WE CONSIDER TO BE VALID, WILL COPIES.

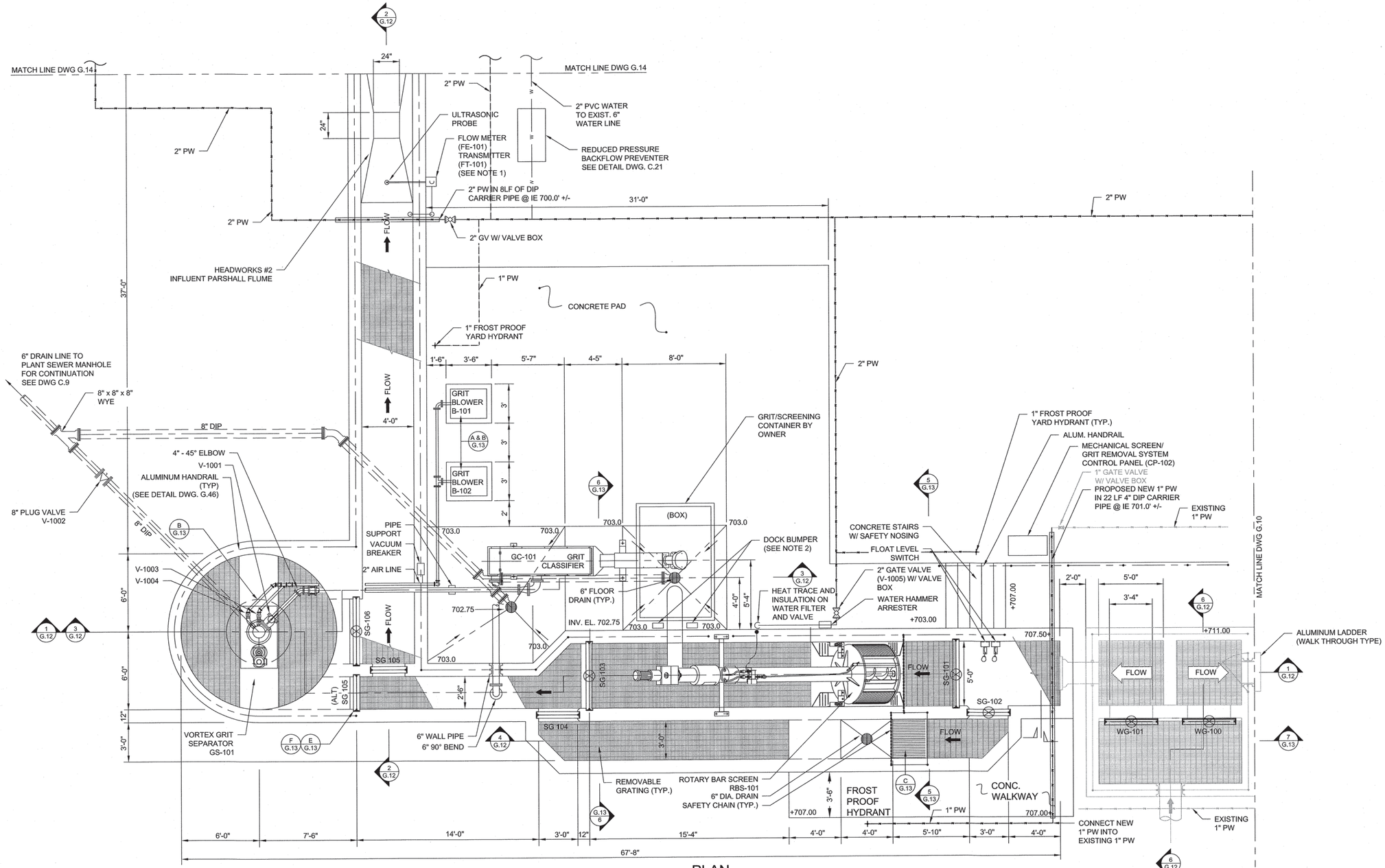

PLAN

SCALE: 1/4" = 1'-0"

NOTES:

1. NEW FLOW METER IS TO ACCEPT INPUT FROM ULTRASONIC PROBES LOCATED AT EXISTING AND NEW PARSHALL FLUMES, PROVIDE FLOW DATA FOR EACH FLUME, INTEGRATED TOTAL FLOW, AND OUTPUT SIGNAL TO RELOCATED INFLUENT SAMPLER AND PLANT SCADA SYSTEM. SEE SPEC 40 71 69.
2. INSTALL TWO BUMPER PADS WITH FABRIC IMPREGNATION RUBBER PADS, 11"W X 4.5"D X 20"H AND 3/4"DIA X 4-3/4." WEDGE ANCHORS TO CONCRETE WALL AT DUMPSTER LOCATION.

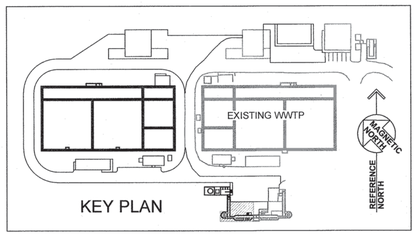

KEY PLAN

WK DICKSON
community infrastructure consultants
616 COLONNADE DRIVE
CHARLOTTE, NC 28205
(t)704-334-5348
(f)704-334-0078
WWW.WKDICKSON.COM
NC LICENSE NO.F-0374

NORTH CAROLINA PROFESSIONAL SEAL 8802 ENGINEER CHARLES R. FRONEBERGER

PROFESSIONAL SEAL

REVISION RECORD

NO.	DATE	DESCRIPTION	BY

- NOT RELEASED FOR CONSTRUCTION -

FINAL DRAWINGS -

PROJECT NAME: KILLIAN CREEK WWTP PHASE 3 UPGRADE

DRAWING TITLE: PROPOSED HEADWORKS PLAN & SECTIONS

PROJ. MGR.:	CRF
DESIGN BY:	CRF
DRAWN BY:	NS/CH
PROJ. DATE:	SEPT. 2018

DRAWING NUMBER:

G.11 OF 168

WKD PROJ. NO.: 20170294.00.CL

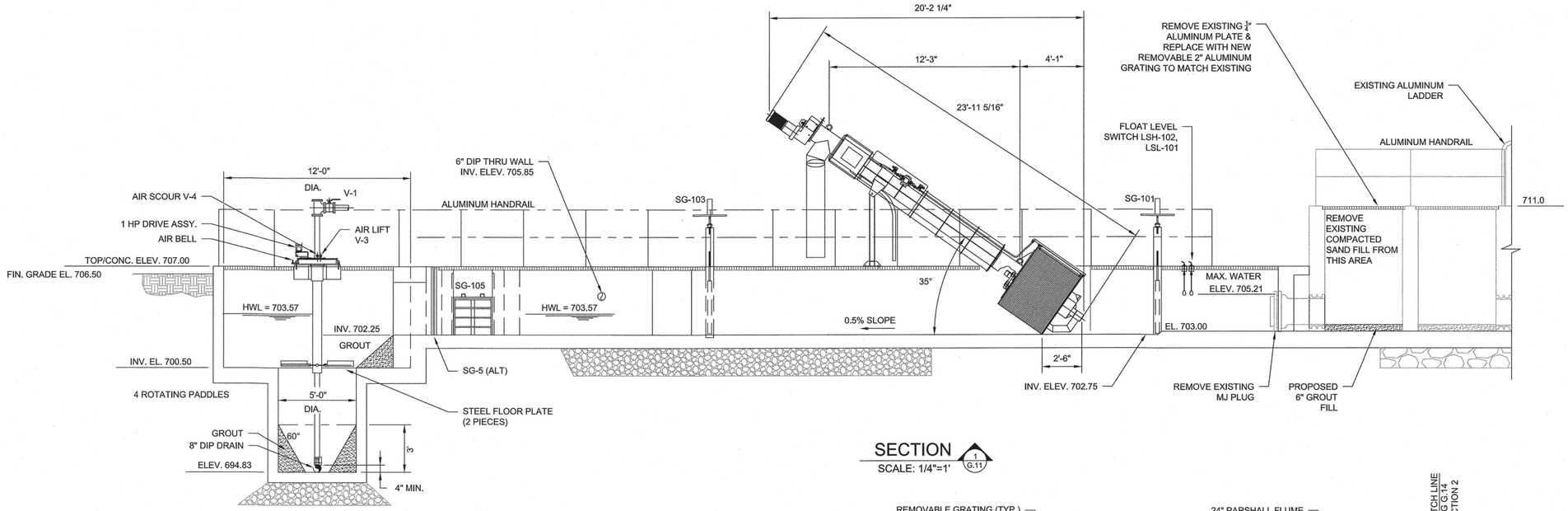

SECTION 1 G.11
SCALE: 1/4"=1'

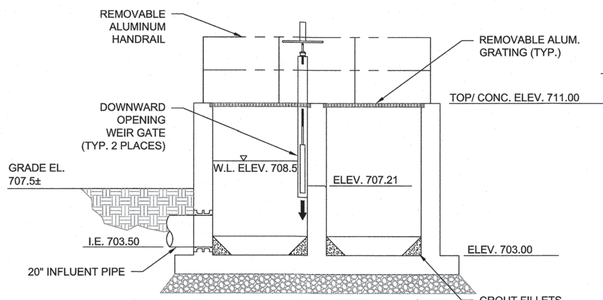

SECTION 6 G.11
SCALE: 1/4"=1'-0"

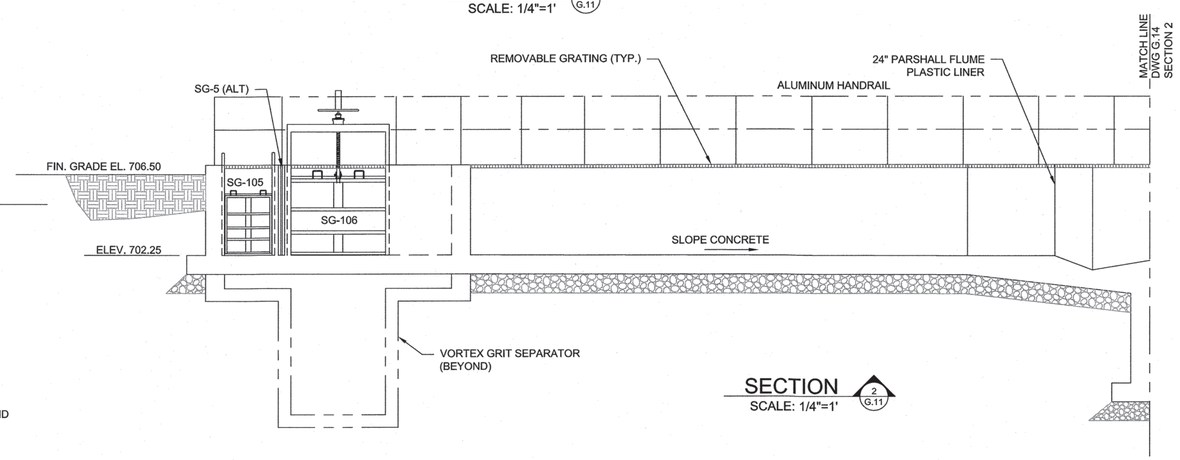

SECTION 2 G.11
SCALE: 1/4"=1'

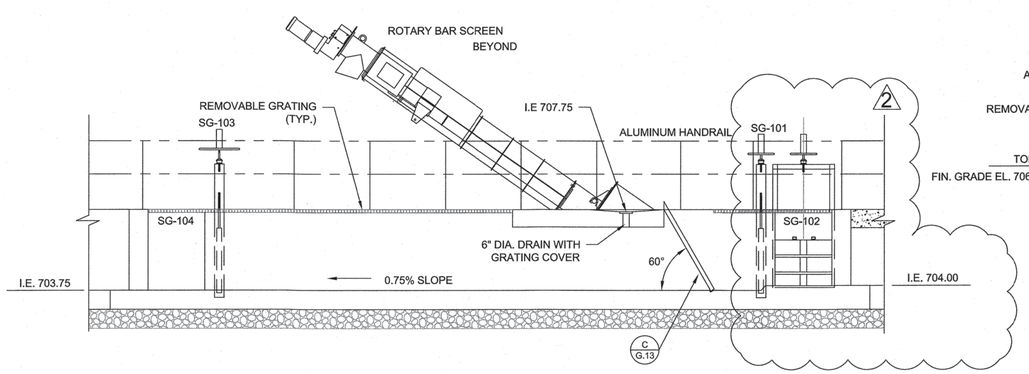

SECTION 4 G.11
SCALE: 1/4"=1'

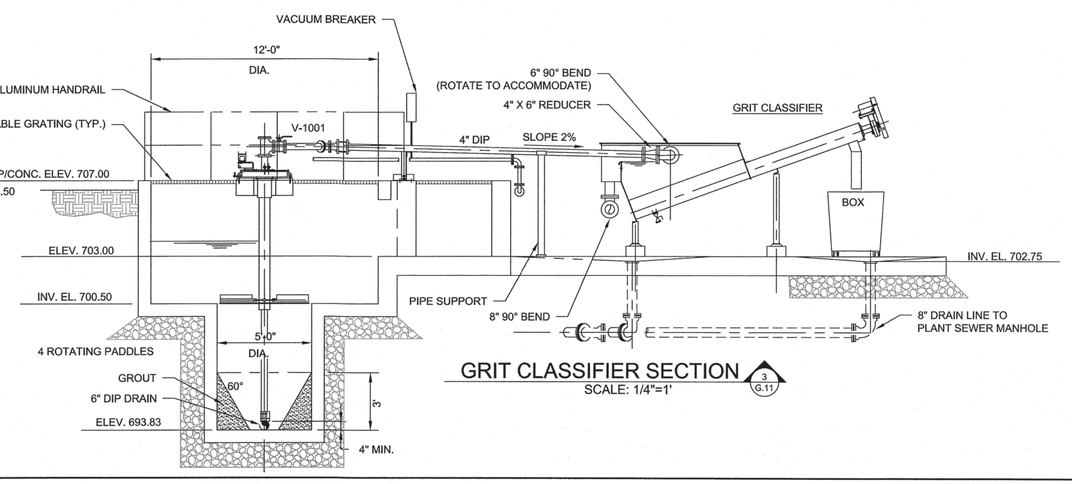

GRIT CLASSIFIER SECTION 3 G.11
SCALE: 1/4"=1'

COPYRIGHT © 2018 DICKSON & CO., INC. ALL RIGHTS RESERVED. REPRODUCTION OR USE OF THE CONTENTS OF THIS DOCUMENT, ADDITIONS OR ALTERATIONS TO THE CONTENTS OF THIS DOCUMENT, OR DISCLOSURE TO OTHERS OF THE CONTENTS OF THIS DOCUMENT, IN WHOLE OR IN PART, WITHOUT WRITTEN CONSENT OF W.K. DICKSON & CO., INC., IS PROHIBITED. ALL COPIES FROM THE ORIGINAL OF THIS DOCUMENT, MARKED WITH AN ORIGINAL SIGNATURE AND SEAL SHALL BE CONSIDERED TO BE VALID, TRUE COPIES.

WK DICKSON
community infrastructure consultants
616 COLONNADE DRIVE
CHARLOTTE, NC 28205
(t)704-334-5348
(f)704-334-0078
WWW.WKDICKSON.COM
NC LICENSE NO.F-0374

NORTH CAROLINA PROFESSIONAL ENGINEER SEAL 8802 CHARLES R. FRONEBERGER
PROFESSIONAL SEAL

REVISION RECORD

NO.	DATE	DESCRIPTION	BY
1	10/9/18	ISSUE FOR OWNER/NCDEQ REVIEW	CRF
2	9/17/19	SLUICE GATE TAGS	CRF

- NOT RELEASED FOR CONSTRUCTION -

FINAL DRAWINGS

PROJECT NAME: KILLIAN CREEK WWTP PHASE 3 UPGRADE

DRAWING TITLE: PROPOSED HEADWORKS SECTIONS & DETAILS SHEET 1

PROJ. MGR.:	CRF
DESIGN BY:	CRF
DRAWN BY:	NS/CH
PROJ. DATE:	SEPT. 2018

DRAWING NUMBER:

G.12 OF 168

WKD PROJ. NO.: 20170294.00.CL

COPYRIGHT © W.K. DICKSON & CO., INC. ALL RIGHTS RESERVED. REPRODUCTION OR USE OF THIS DOCUMENT, ADDITIONS OR MODIFICATIONS THERETO, IN WHOLE OR IN PART, WITHOUT WRITTEN PERMISSION OF W.K. DICKSON & CO., INC., IS PROHIBITED. ONLY COPIES FROM THE ORIGINAL OF THIS DOCUMENT MARKED WITH AN ORIGINAL SIGNATURE AND SEAL SHALL BE CONSIDERED TO BE VALID, TRUE COPIES.

ROTARY BAR SCREEN
RBS-101

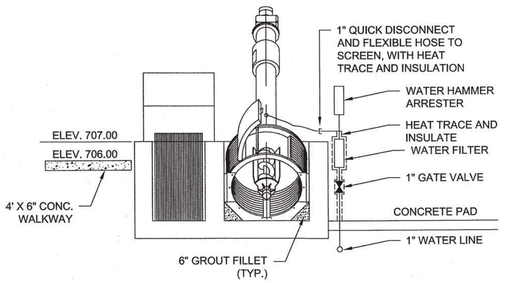

5 G.11 SECTION
NOT TO SCALE

NOTES:
1. WATER SUPPLY LINES AND ELECTRICAL CONNECTIONS TO BE FLEXIBLE OR QUICK DISCONNECT TYPE TO ALLOW UNIT TO PIVOT OUT OF CHANNEL.
2. STAIRS NOT SHOWN FOR CLARITY.

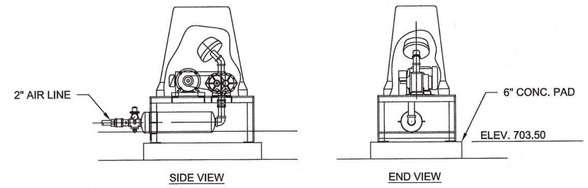

A G.11 GRIT CHAMBER BLOWER (B-101 & B-102)
NOT TO SCALE

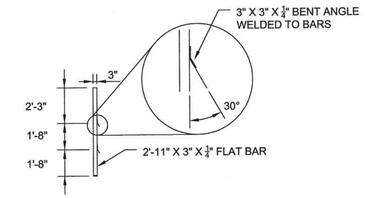

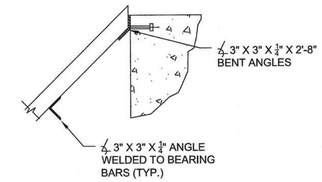

UPPER CONNECTION
MANUALLY CLEANED BAR RACK DETAIL

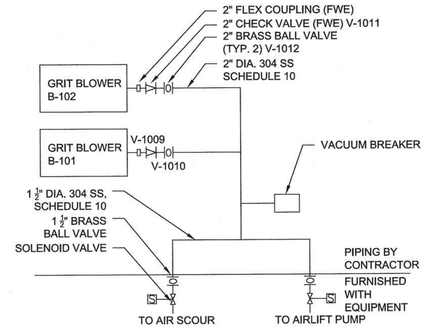

B G.11 GRIT CHAMBER BLOWER SCHEMATIC
NOT TO SCALE

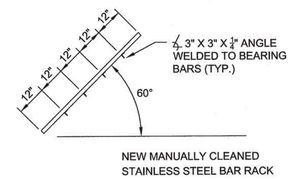

MANUALLY CLEANED BAR RACK DETAIL

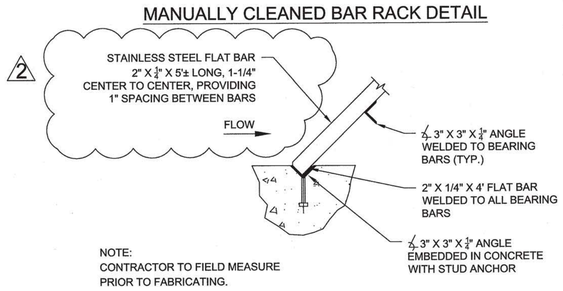

NOTE:
CONTRACTOR TO FIELD MEASURE PRIOR TO FABRICATING.

BOTTOM CONNECTION

C G.11 BAR RACK DETAILS
NOT TO SCALE

ROTARY BAR SCREEN
RBS-101

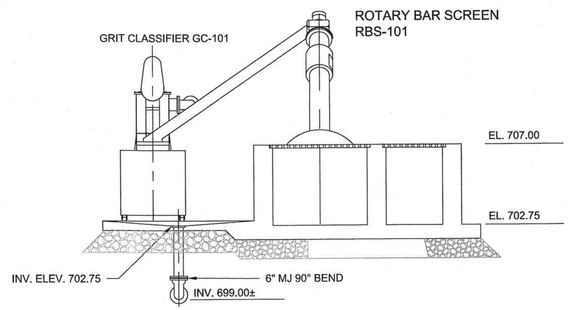

6 G.11 SECTION
SCALE: 1/4"=1'

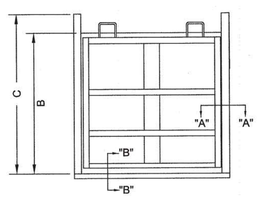

E G.11 STOP GATE
NOT TO SCALE

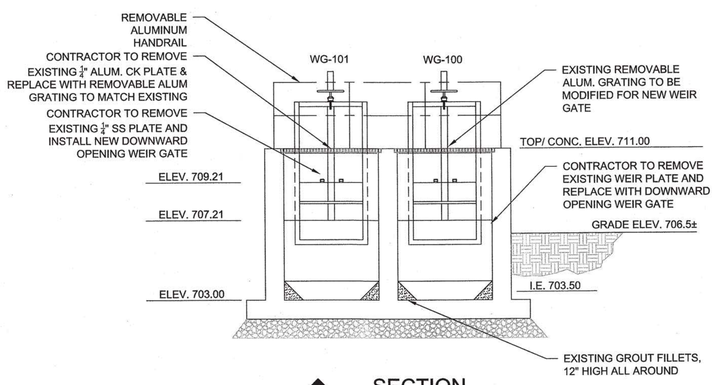

7 G.11 SECTION
SCALE: 1/4"=1'-0"

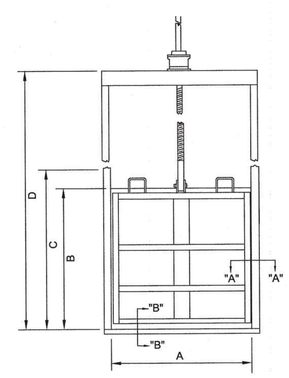

F G.11 CHANNEL GATE
NOT TO SCALE

HEADWORKS GATE SCHEDULE

GATE NO.	(A) SIZE OPENING	(B) GATE DEPTH	(C) HEIGHT CHANNEL	(D) FRAME HEIGHT
SG 101	60"	36"	4'-0"	7'-6"
SG 102	36"	30"	4'-0"	NA HAND GATE
SG 103	60"	36"	4'-6"	8'-0"
SG 104	36"	30"	4'-6"	NA HAND GATE
SG 105	30"	30"	4'-9"	NA HAND GATE
SG 106	60"	36"	4'-9"	8'-3"
WG 100	40"	24"	3'-9 1/2"	7'-3 1/2"
WG 101	40"	24"	3'-9 1/2"	7'-3 1/2"

NOTE:
1. GATE SCHEDULES ARE NOT TO BE USED FOR THE BASIS OF QUANTITY ESTIMATION FOR BIDDING

FINAL DRAWINGS - NOT RELEASED FOR CONSTRUCTION

WK DICKSON
community infrastructure consultants
616 COLONNADE DRIVE
CHARLOTTE, NC 28205
(t)704-334-5348
(f)704-334-0078
WWW.WKDICKSON.COM
NC LICENSE NO.F-0374

NORTH CAROLINA PROFESSIONAL ENGINEER SEAL 8802 12-17-18 CHARLES F. FRONEBERGER
PROFESSIONAL SEAL

REVISION RECORD

NO.	DATE	DESCRIPTION	BY
1	10/8/18	ISSUE FOR OWNER/NCDEQ REVIEW	CRF
2	12/17/19	REVISED PER NCDEQ REVIEW	RWH

PROJECT NAME: KILLIAN CREEK WWTP PHASE 3 UPGRADE

DRAWING TITLE: PROPOSED HEADWORKS, SECTIONS & DETAILS SHEET 2

PROJ. MGR.:	CRF
DESIGN BY:	CRF
DRAWN BY:	NS/CH
PROJ. DATE:	SEPT. 2018

DRAWING NUMBER:
G.13 OF 168
WKD PROJ. NO.:
20170294.00.CL

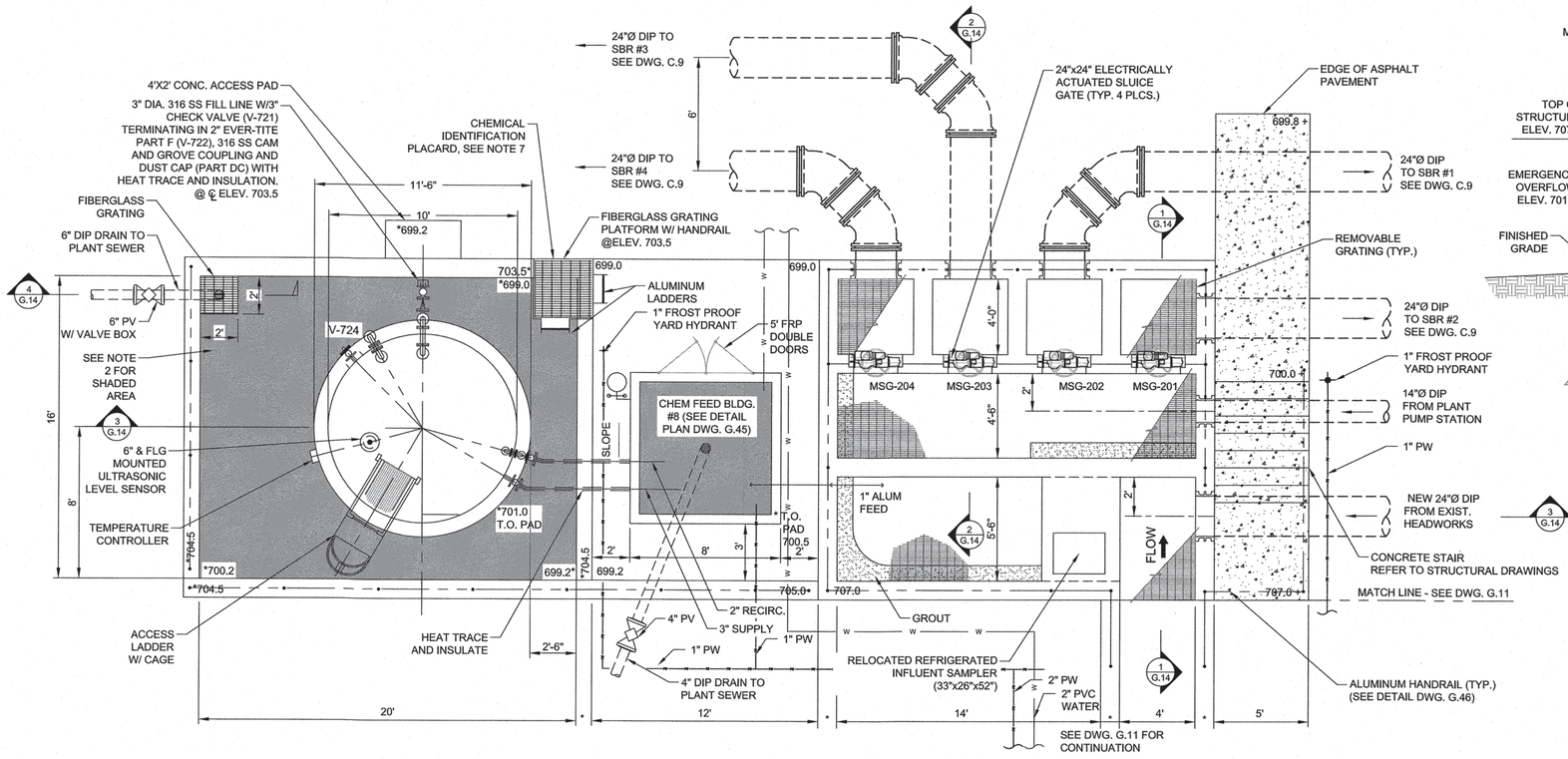

PLAN - SBR FLOW SPLITTER

SCALE: 1/4" = 1'-0"

* FOR WALL THICKNESS, REFER TO STRUCTURAL DRAWINGS.

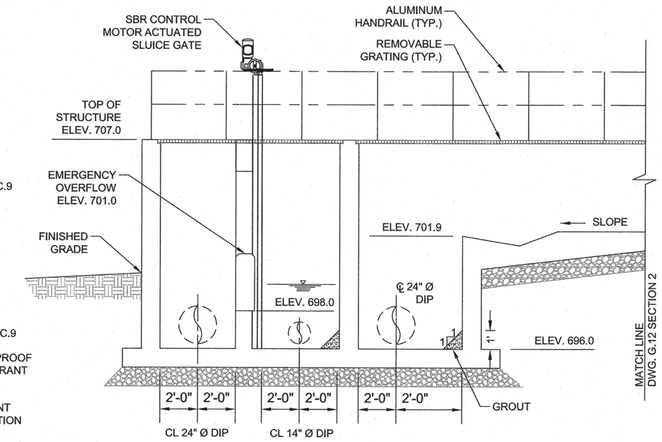

SECTION

SCALE: 1/4"=1'-0"

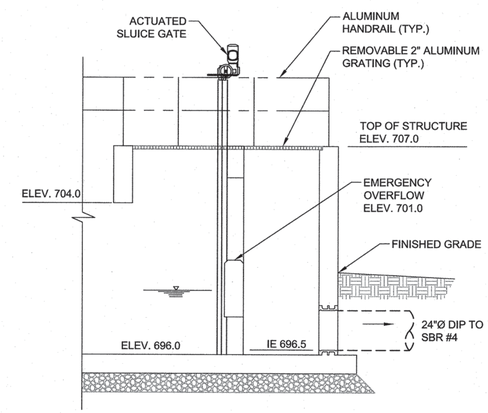

SECTION

SCALE: 1/4"=1'-0"

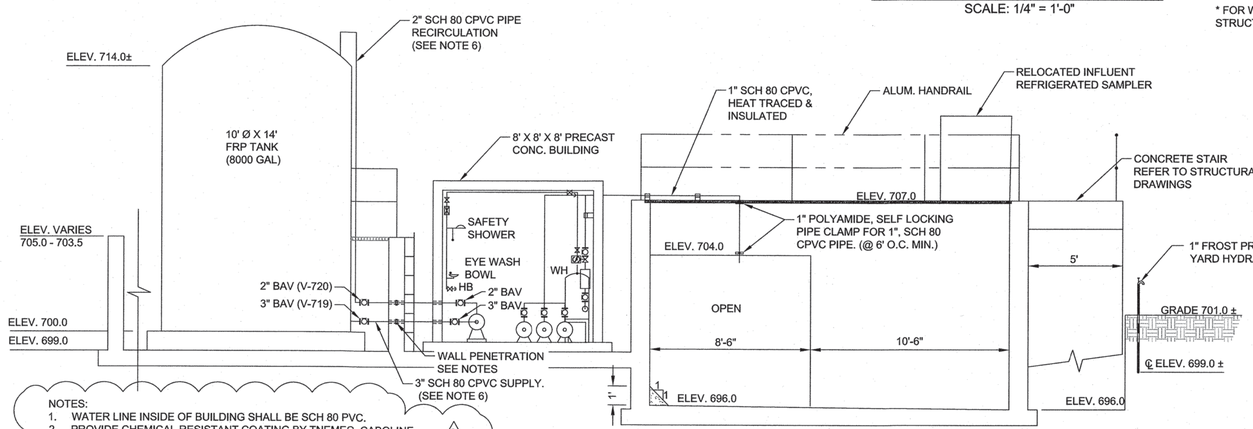

SECTION

SCALE: 1/4"=1'-0"

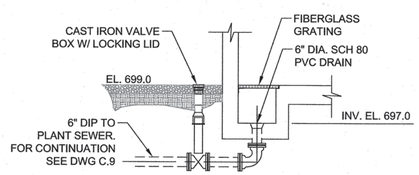

SECTION

SCALE: 1/4" = 1'

NOTES:

1. WATER LINE INSIDE OF BUILDING SHALL BE SCH 80 PVC.
2. PROVIDE CHEMICAL RESISTANT COATING BY TNEMEC, CABOLINE, KOP-COAT, CRYSTAL COAST INDUSTRIAL COATING, OR EQUAL TO REFERENCED COATING ON FLOOR AS FOLLOWS:
   - 2.1. PREPARATION - SCARIFY CONCRETE TO ICRI CSP3
   - 2.2. PRIMER COAT - TNEMEC SERIES 201 EPOXOLINE PRIMER OR EQUAL @ 6.0 TO 8.0 MIL D.F.T.
   - 2.3. FINISH COAT - TNEMEC SERIES 282-GLAZE OR EQUAL @ 6.0 TO 8.0 MIL D.F.T. BROADCAST SILICA SAND INTO COATING AND BACK ROLL TO PROVIDE UNIFORM SLIP RESISTANT FINISH.
   - 2.4. ALTERNATE CRYSTAL COAST INDUSTRIAL PRIME COAT RHINO LINING PRIMER 101, 2 - 3 MILS & RHINO HICHEM 11 - 70, 100 MILS.
3. CONTRACTOR TO PROVIDE HOSE BIBB - PIPE ADAPTERS WITH HOSE CLAMP FOR CONNECTION OF TUBING TO PROCESS PIPE.
4. HEAT TRACE AND INSULATE ALL CHEM. PIPING OUTSIDE OF BUILDING.
5. ALL CONTAINMENT WALL PIPE PENETRATIONS SHALL BE MADE USING PLASTIC SLEEVES AND LINK SEALS W/ STAINLESS STEEL BOLTS, NUTS & WASHERS COVERED BY NON-SHRINK GROUT EACH SIDE.
6. ALL CHEMICAL PIPING, FITTINGS AND VALVES FOR THE PHOSPHORUS REMOVAL CHEMICAL SYSTEM SHALL BE CONSTRUCTED OF CPVC WITH EPDM SEATS ON VALVES
7. A HAZMAT CHEMICAL IDENTIFICATION SIGN OF WEATHER RESISTANT MATERIAL SHALL BE PERMANENTLY ATTACHED TO CONTAINMENT WALL.
8. FIBERGLASS REINFORCED PLASTIC (FRP) GRATING SHALL BE PRUTRUDED AND MOLDED GRATING DESIGNED FOR A MINIMUM 50 PSF UNIFORMLY DISTRIBUTED LOAD WITH A MAXIMUM DEFLECTION OF 3/8-INCH OR L/120 AT THE CENTER OF A SIMPLE SPAN. RESINS SHALL BE COMPATIBLE WITH COMMERCIAL ALUM AND POLYALUMINUM CHLORIDE (PAC) CHEMICALS. SUBMIT COLOR OPTIONS FOR OWNER SELECTION.

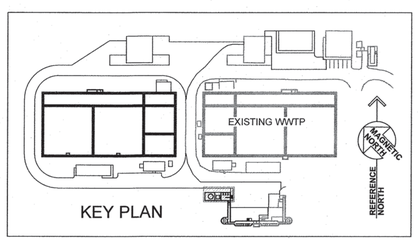

KEY PLAN

COPYRIGHT © W.K. DICKSON & CO., INC., ALL RIGHTS RESERVED. REPRODUCTION OR USE OF THE CONTENTS OF THE DOCUMENT, ADDITIONS OR MODIFICATIONS THERETO, IN WHOLE OR IN PART, WITHOUT WRITTEN PERMISSION OF W.K. DICKSON & CO., INC., IS PROHIBITED. COPY OBTAINED FROM THE ORIGINAL OF THIS DOCUMENT MARKED WITH AN ORIGINAL SIGNATURE AND SEAL SHALL BE CONSIDERED TO BE VALID, TRUE COPIES.

WK DICKSON
community infrastructure consultants
616 COLONNADE DRIVE
CHARLOTTE, NC 28205
(t)704-334-5348
(f)704-334-0078
WWW.WKDICKSON.COM
NC LICENSE NO.F-0374

NORTH CAROLINA PROFESSIONAL ENGINEER SEAL 18802 CHARLES R. FRONDEBERGER 10-25-19

PROFESSIONAL SEAL

NO.	DATE	DESCRIPTION	BY
1.	10/9/18	REVISION RECORD	
2.	5/21/19	ISSUE FOR OWNER/CDED REVIEW.	CRF
3.	9/18/19	REVISED SECTION 3 BALL VALVES	WBK
		REVISED NOTE 8	CRF

FINAL DRAWINGS - - NOT RELEASED FOR CONSTRUCTION

PROJECT NAME: KILLIAN CREEK WWTP PHASE 3 UPGRADE

DRAWING TITLE: SBR INFLUENT FLOW SPLITTER PLAN, SECTION & DETAILS

PROJ. MGR.:	CRF
DESIGN BY:	CRF
DRAWN BY:	NS/CH
PROJ. DATE:	SEPT. 2018

DRAWING NUMBER:

G.14 OF 168

WKD PROJ. NO.: 20170294.00.CL

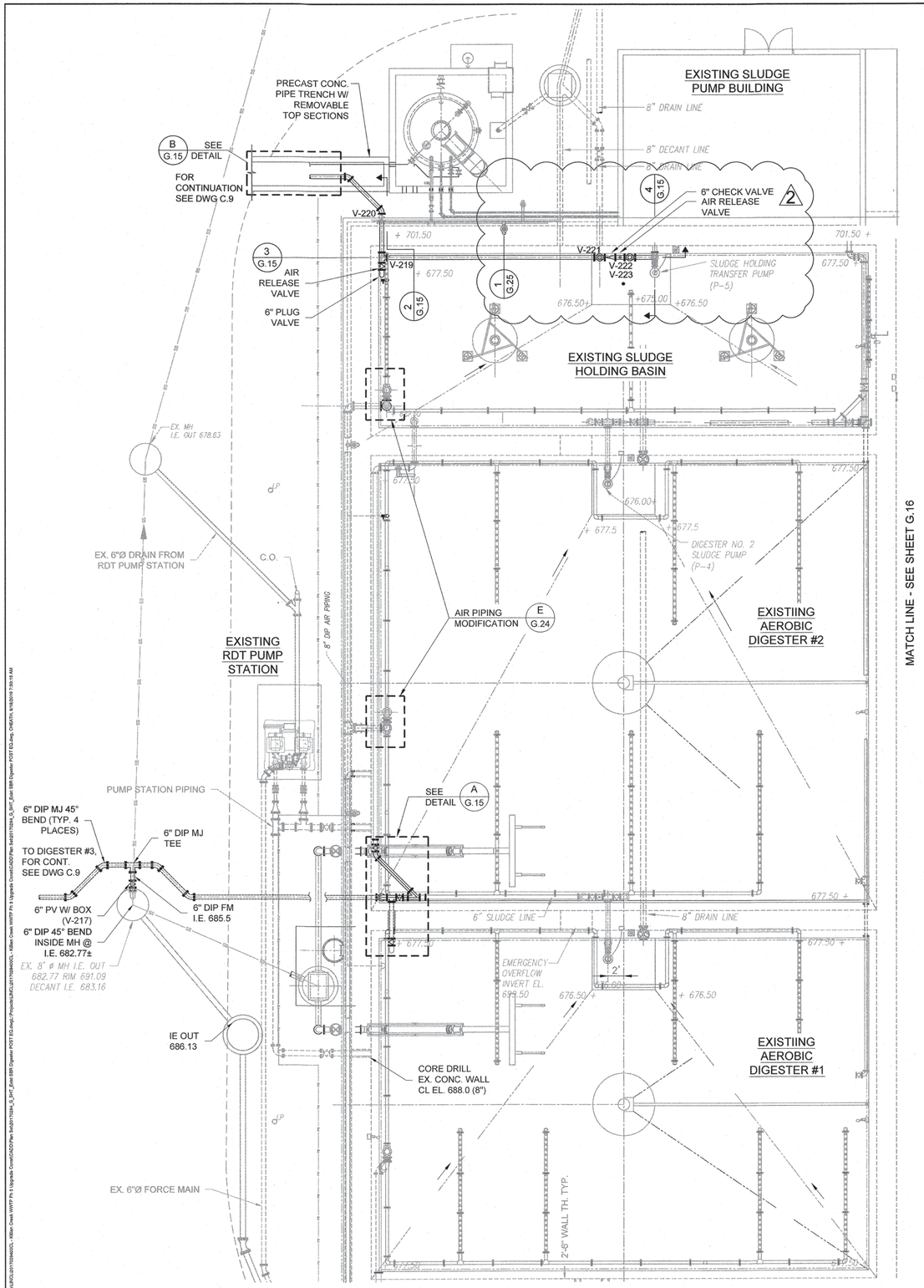

EXISTING DIGESTER MODIFICATION PLAN

SCALE: 1/8" = 1'=0"

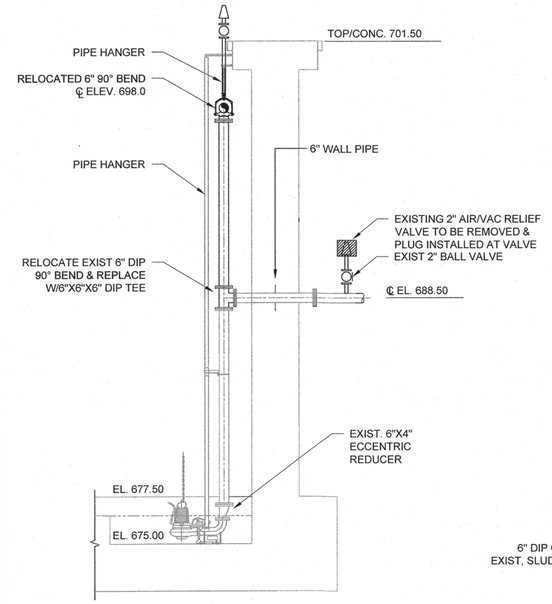

1 G.15 SECTION

SCALE: 1/4" = 1'-0"

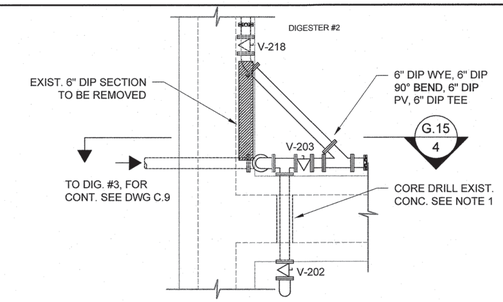

A G.15 DETAIL

SCALE: 1/4" = 1'-0"

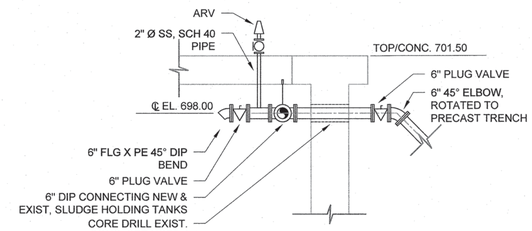

2 G.15 SECTION

SCALE: 1/4" = 1'-0"

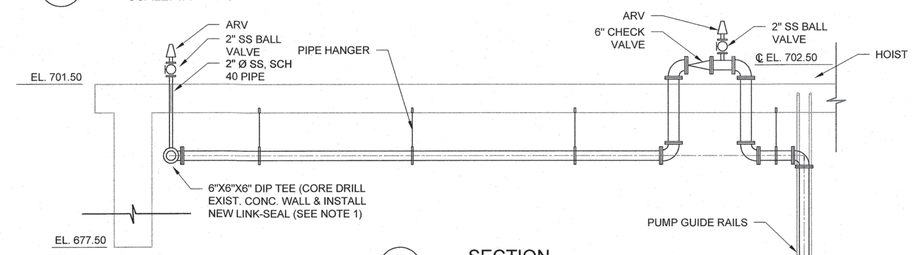

3 G.15 SECTION

SCALE: 1/4" = 1'-0"

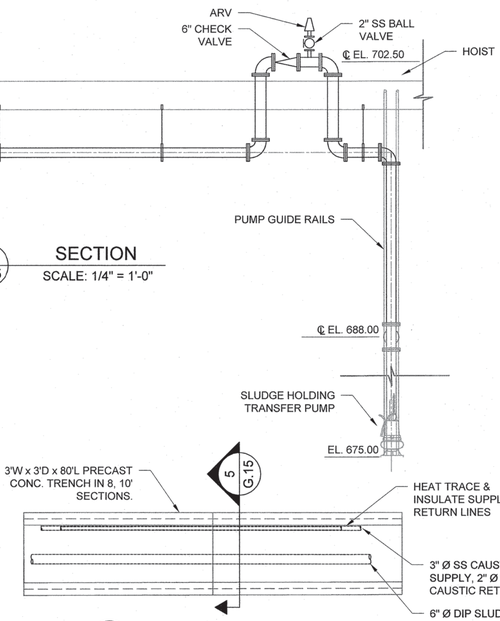

B G.15 CONCRETE TRENCH PLAN

SCALE: 1/4" = 1'-0"

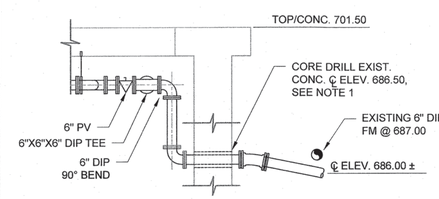

4 G.15 SECTION

SCALE: 1/4" = 1'-0"

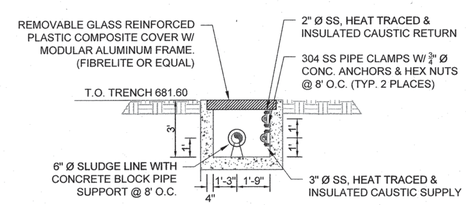

5 G.15 SECTION

SCALE: 1/4" = 1'-0"

NOTES:

1. INSTALL LINK SEALS AT ALL CORE DRILLED PIPE PENETRATIONS. LINK-SEALS SHALL HAVE EPDM ELEMENTS WITH 316 STAINLESS STEEL NUB, BOLTS & WASHERS SIZED FOR APPLICABLE PIPE.

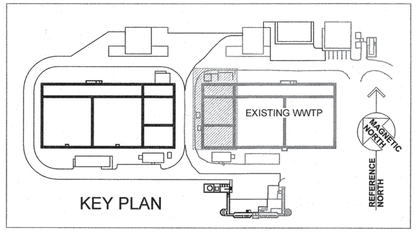

KEY PLAN

WK DICKSON
community infrastructure consultants
616 COLONNADE DRIVE
CHARLOTTE, NC 28205
(t)704-334-5348
(f)704-334-0078
WWW.WKDICKSON.COM
NC LICENSE NO.F-0374

NORTH CAROLINA PROFESSIONAL SEAL 8802 ENGINEER CHARLES R. FRONEBERGER 12-21-18

PROFESSIONAL SEAL

REVISION RECORD

NO.	DATE	DESCRIPTION	BY
1	10/9/18	ISSUE FOR OWNER/NCDEQ REVIEW	CRF
2	9/17/19	SECTION CALLOUTS	CLH

FINAL DRAWINGS - NOT RELEASED FOR CONSTRUCTION

PROJECT NAME: KILLIAN CREEK WWTP PHASE 3 UPGRADE

DRAWING TITLE: EXISTING DIGESTER MODIFICATION PLAN

PROJ. MGR.:	CRF
DESIGN BY:	CRF
DRAWN BY:	NS/CH
PROJ. DATE:	SEPT. 2018

DRAWING NUMBER:

G.15 OF 168

WKD PROJ. NO.:

20170294.00.CL

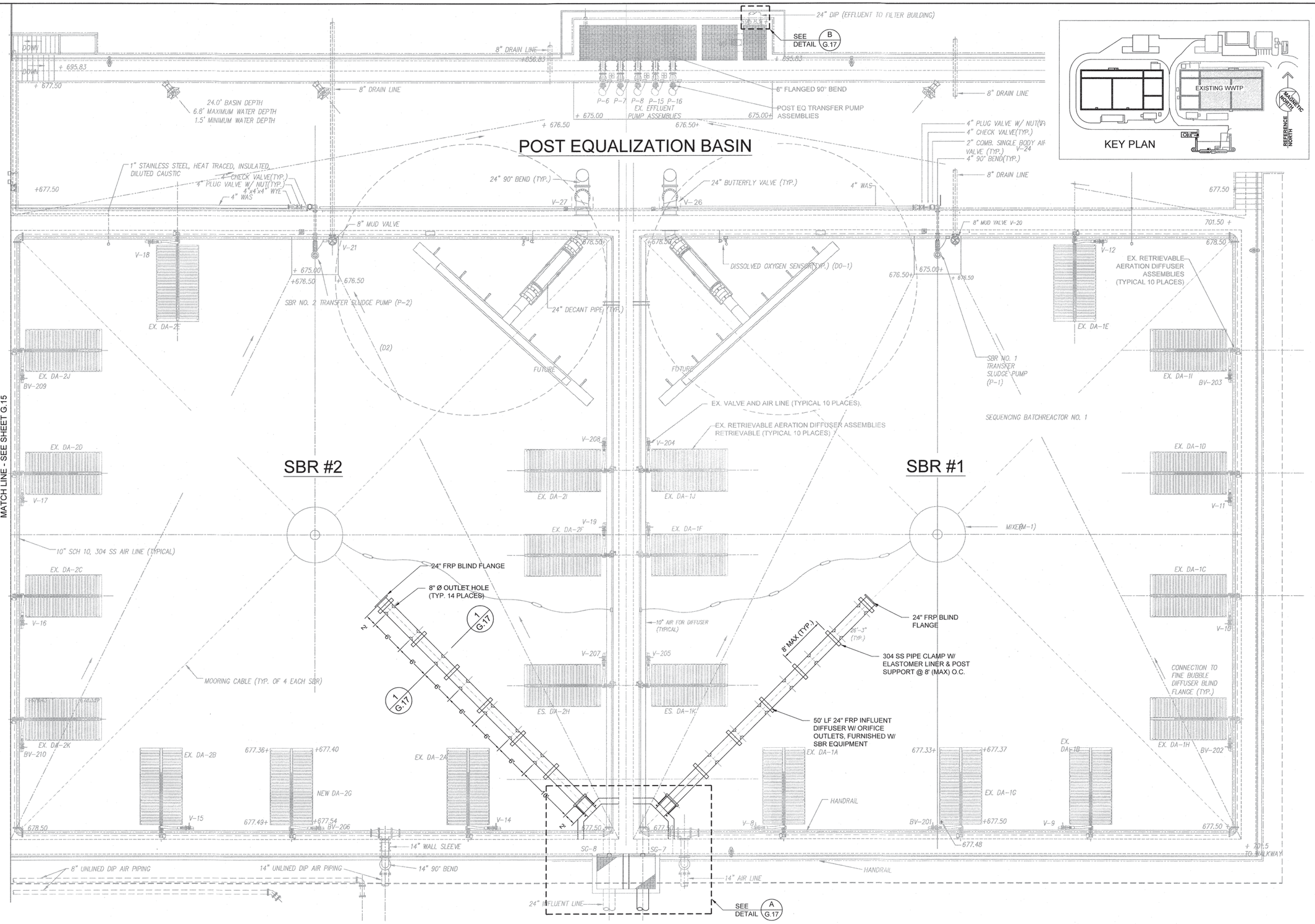

EXISTING SBR SYSTEM MODIFICATION PLAN

SCALE: 1/8" = 1'=0"

NOTE:
ELEVATIONS FOR THE KILLIAN CREEK PHASE 3 UPGRADE ARE BASED ON THE NAVD88 DATUM.

ELEVATIONS UTILIZED IN 2009 AND 2015 PLANT CONSTRUCTION WERE BASED UPON NGVD29. ELEVATIONS OF EXISTING STRUCTURES AND PIPING HAVE BEEN ADJUSTED TO REFLECT THE NAVD88 DATUM.

FINAL DRAWINGS - NOT RELEASED FOR CONSTRUCTION

WK DICKSON
community infrastructure consultants
616 COLONNADE DRIVE
CHARLOTTE, NC 28205
(t)704-334-5348
(f)704-334-0076
WWW.WKDICKSON.COM
NC LICENSE NO.F-0374

NORTH CAROLINA PROFESSIONAL ENGINEER SEAL 8802 CHARLES F. FRONEBERGER

PROFESSIONAL SEAL

REVISION RECORD

NO.	DATE	DESCRIPTION	BY
A	10/9/18	ISSUE FOR OWNER/NCDEQ REVIEW	CRF

PROJECT NAME: KILLIAN CREEK WWTP PHASE 3 UPGRADE

DRAWING TITLE: EXISTING SBR SYSTEM MODIFICATIONS PLAN

PROJ. MGR.:	CRF
DESIGN BY:	CRF
DRAWN BY:	NS/CH
PROJ. DATE:	SEPT. 2018

DRAWING NUMBER:

G.16 OF 168

WKD PROJ. NO.:

20170294.00.CL

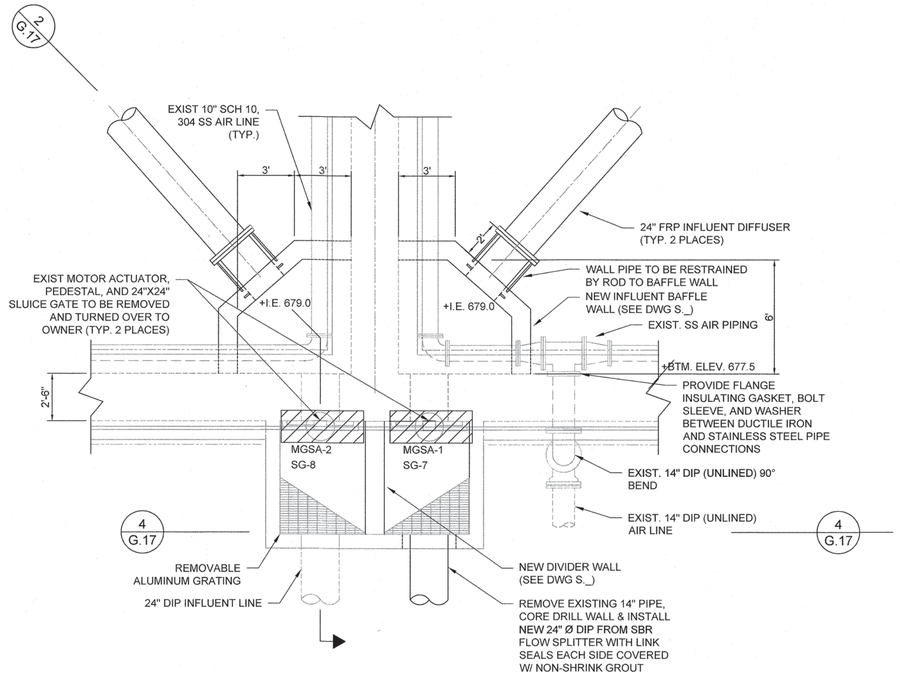

A G.16 DETAIL - INFLUENT MODIFICATIONS

SCALE: 1/4" = 1'-0"

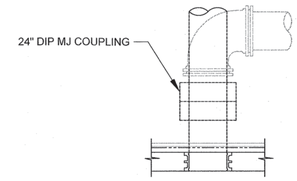

NOTE:
1. CUT EXISTING 24" DIP AND INSTALL PIPE COUPLING AND NEW 24" DIP. SEE C.9 FOR CONTINUATION.

B G.16 DETAIL - POST EQ EFFLUENT PIPING

SCALE: 1/4" = 1'-0"

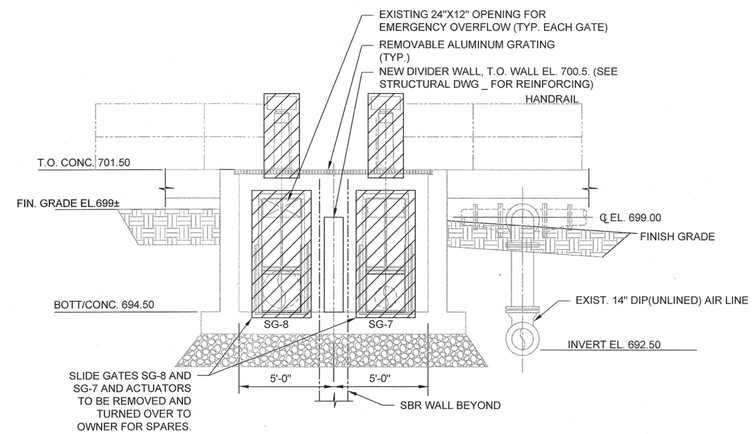

4 G.17 SECTION

SCALE: 1/4" = 1'-0"

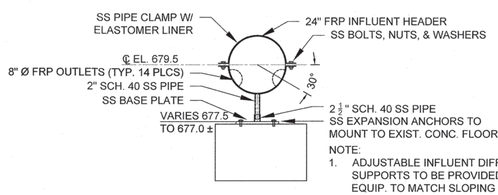

NOTE:
1. ADJUSTABLE INFLUENT DIFFUSER PIPE SUPPORTS TO BE PROVIDED WITH SBR EQUIP. TO MATCH SLOPING FLOOR.

1 G.16 SECTION - INF. PIPE SUPPORT (TYP.)

SCALE: 3/8" = 1'-0"

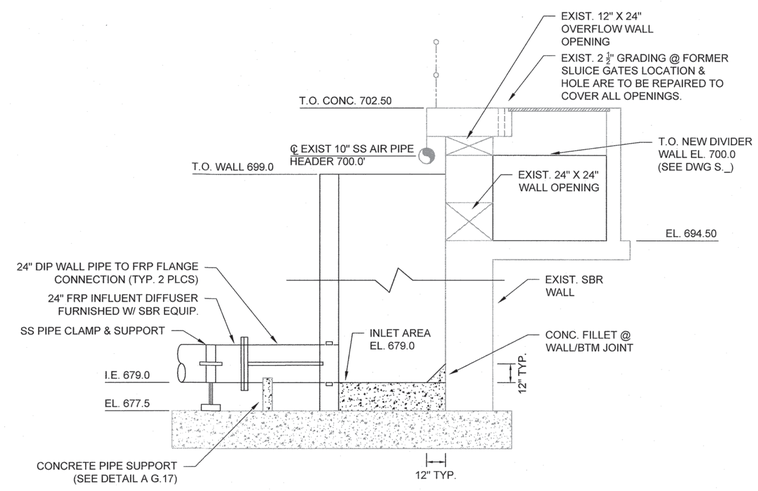

SCALE: 1/4" = 1'-0"

2 G.17 SBR INFLUENT BOX

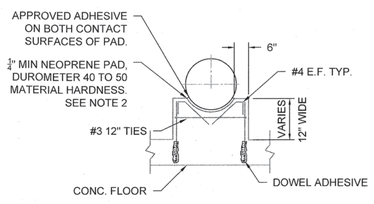

A G.17 CONCRETE PIPE SUPPORT

SCALE: 3/8" = 1'-0"

NOTES:
1. DOWELS MAY BE CAST IN AND ANCHORED WITH DOWEL ADHESIVE. WHERE FLOOR IS 8" THICK OR LESS, USE #4 DOWELS EMBEDDED TO WITHIN 2" OF BOTTOM OF FLOOR SLAB.
2. ENGINEER SHALL VERIFY THICKNESS OF PAD WILL ACCOMMODATE DESIGN MOVEMENT, PARTICULARLY FOR OUTSIDE AERIAL PIPE.

WK DICKSON
community infrastructure consultants
616 COLONNADE DRIVE
CHARLOTTE, NC 28205
(t)704-334-5348
(f)704-334-0078
WWW.WKDICKSON.COM
NC LICENSE NO.F-0374

NORTH CAROLINA PROFESSIONAL SEAL 8802 ENGINEER CHARLES R. FRONEBERGER

PROFESSIONAL SEAL

REVISION RECORD

NO.	DATE	DESCRIPTION	BY
A	10/9/18	ISSUE FOR OWNER/NCDEQ REVIEW	CRF

- NOT RELEASED FOR CONSTRUCTION -

FINAL DRAWINGS -

PROJECT NAME: KILLIAN CREEK WWTP PHASE 3 UPGRADE

DRAWING TITLE: EXISTING SBR & DIGESTER SECTIONS

PROJ. MGR.:	CRF
DESIGN BY:	CRF
DRAWN BY:	NS/CH
PROJ. DATE:	SEPT. 2018

DRAWING NUMBER:

G.17 OF 168

WKD PROJ. NO.:

20170294.00.CL

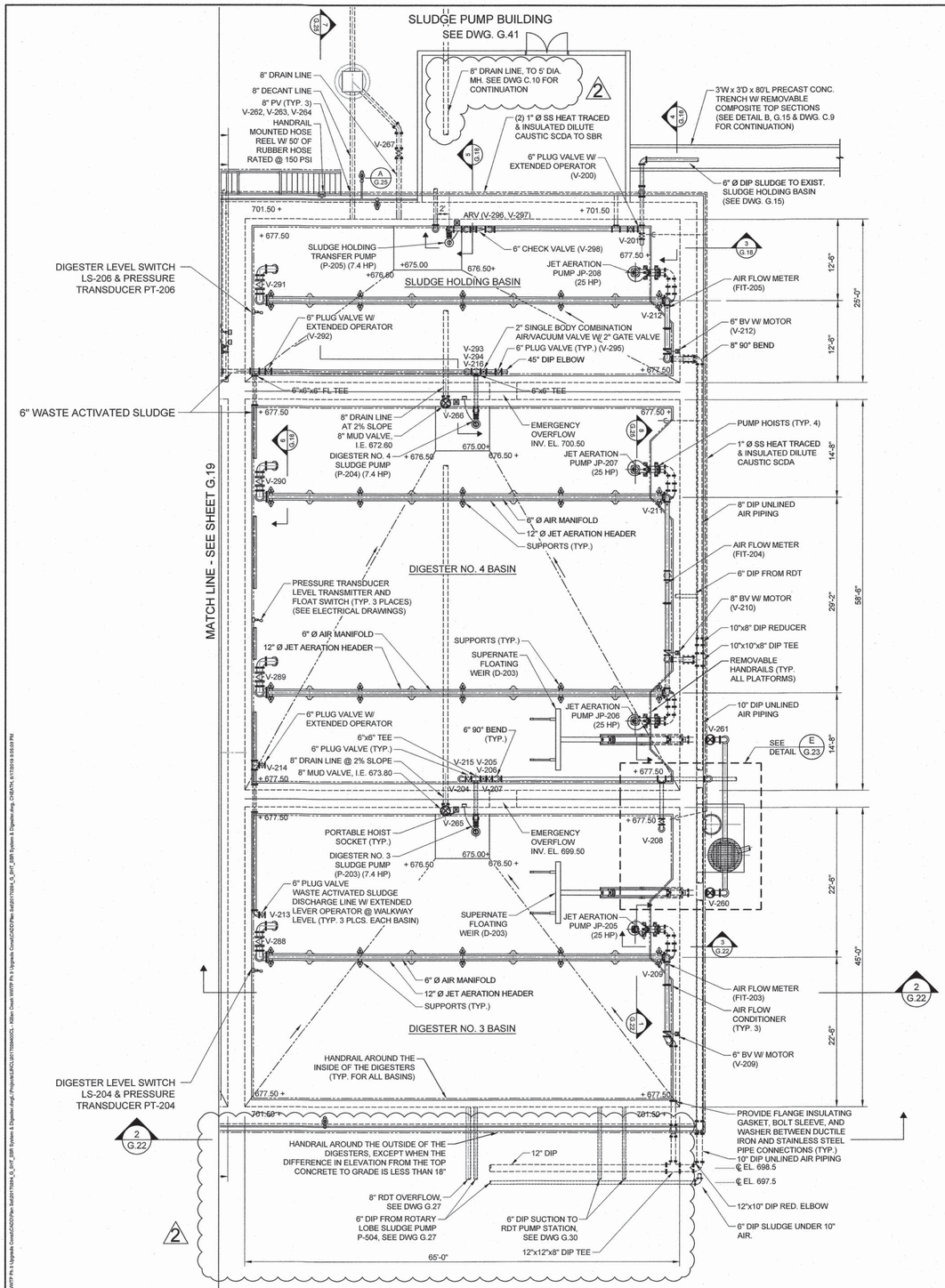

SBR SYSTEMS AND DIGESTERS

SCALE: 1/8" = 1'=0"

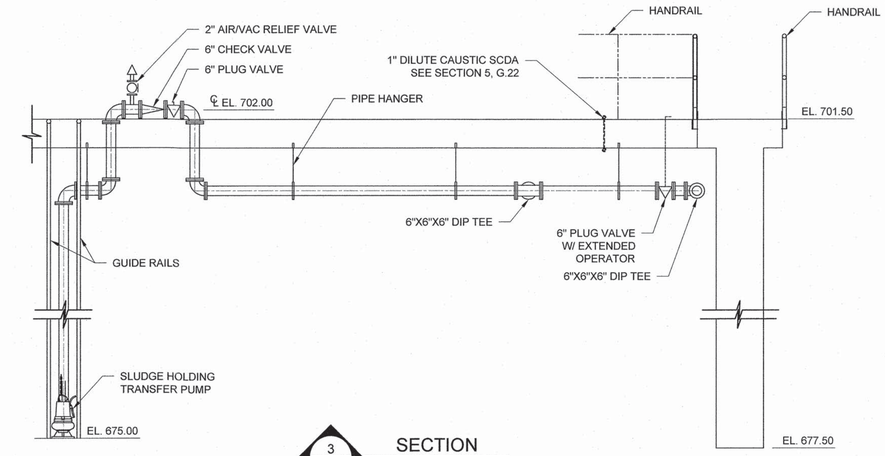

3 G.18 SECTION

SCALE: 1/4" = 1'-0"

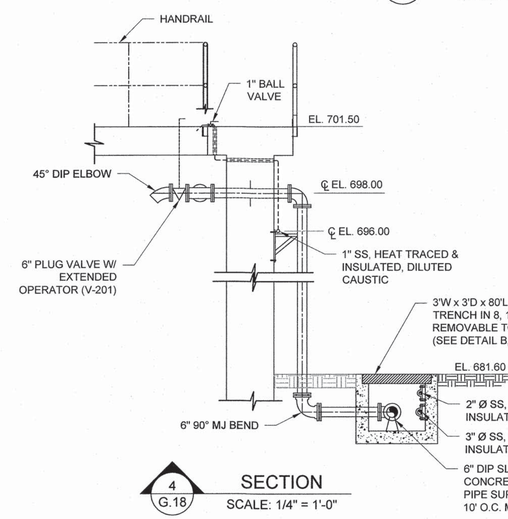

4 G.18 SECTION

SCALE: 1/4" = 1'-0"

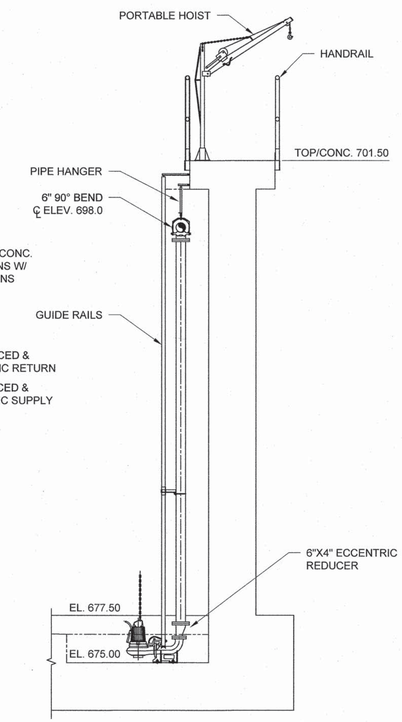

5 G.18 SECTION

SCALE: 1/4" = 1'-0"

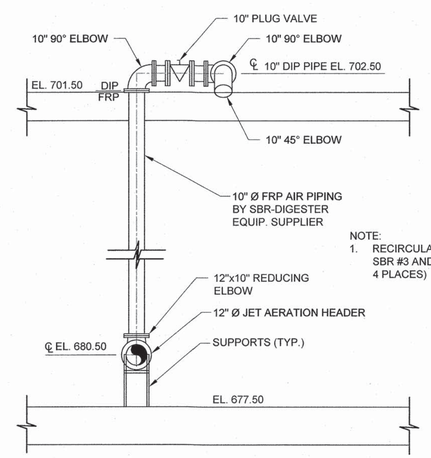

NOTE:
1. RECIRCULATION ASSEMBLY IN SBR #3 AND #4 TO BE 12".(TYP. 4 PLACES)

6 G.18 SECTION (TYP. 4 PLACES)

SCALE: 1/4" = 1'-0"

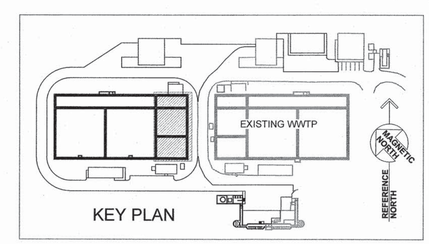

KEY PLAN

FINAL DRAWINGS - NOT RELEASED FOR CONSTRUCTION

WK DICKSON
community infrastructure consultants
616 COLONNADE DRIVE
CHARLOTTE, NC 28205
(t)704-334-5348
(f)704-334-0078
WWW.WKDICKSON.COM
NC LICENSE NO.F-0374

NORTH CAROLINA PROFESSIONAL ENGINEER SEAL 6802 CHARLES F. FRONHEIGER 9-23-19

PROFESSIONAL SEAL

REVISION RECORD

NO.	DATE	DESCRIPTION	BY
1	10/9/18	ISSUE FOR OWNER/NCDEQ REVIEW	CRF
2	9/17/19	LABELING TO SLUDGE TRANSFER LINES	CRF

PROJECT NAME: KILLIAN CREEK WWTP PHASE 3 UPGRADE

DRAWING TITLE: PROPOSED DIGESTER & SLUDGE HOLDING BASIN PLAN

PROJ. MGR.:	CRF
DESIGN BY:	CRF
DRAWN BY:	NS/CH
PROJ. DATE:	SEPT. 2018

DRAWING NUMBER:

G.18 OF 168

WKD PROJ. NO.: 20170294.00.CL

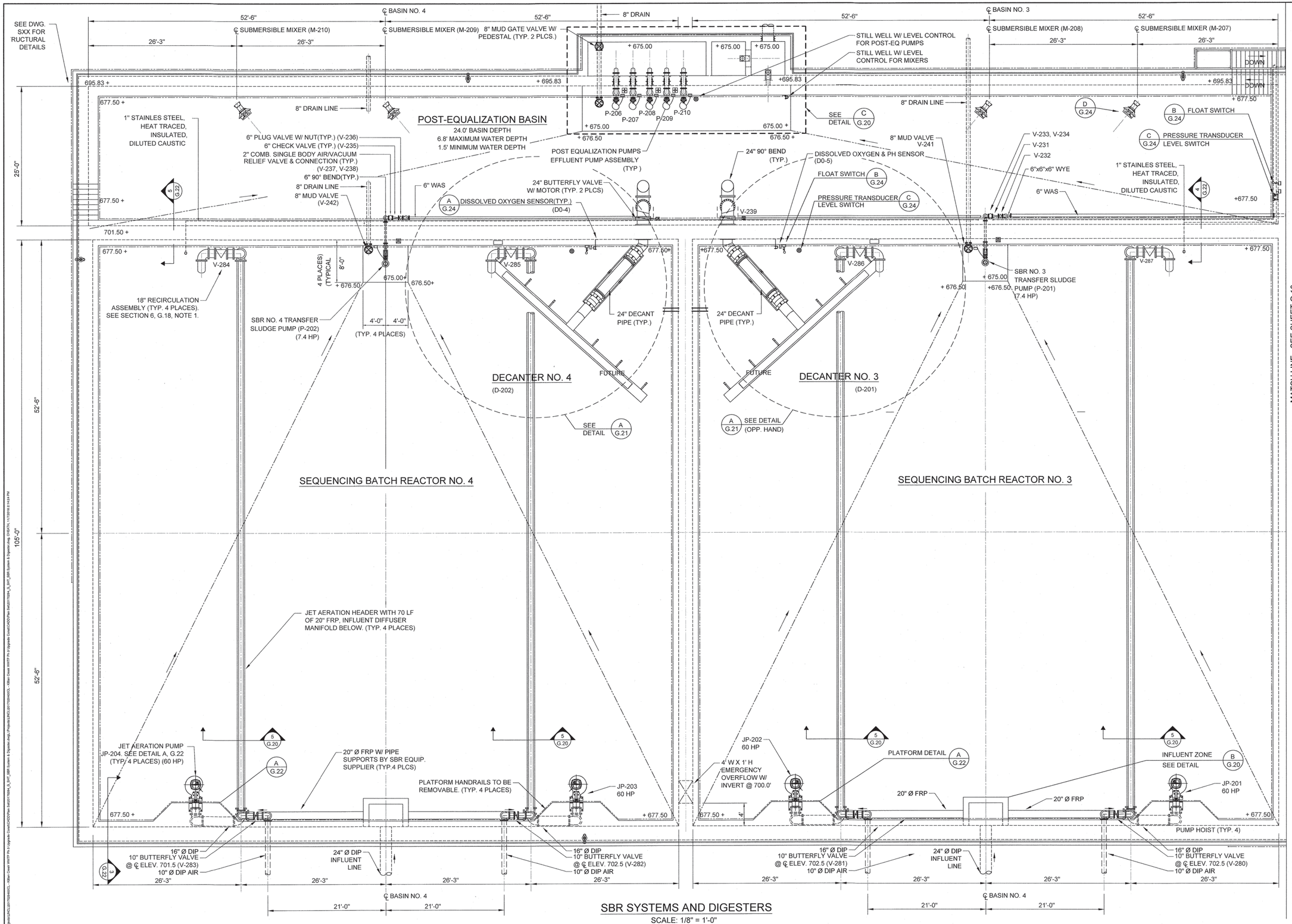

- NOT RELEASED FOR CONSTRUCTION -

FINAL DRAWINGS

MATCH LINE - SEE SHEET G.18

WK DICKSON
community infrastructure consultants
616 COLONNADE DRIVE
CHARLOTTE, NC 28205
(t)704-334-5348
(f)704-334-0078
WWW.WKDICKSON.COM
NC LICENSE NO.F-0374

NORTH CAROLINA PROFESSIONAL SEAL 8803 ENGINEER CHARLES R. FRONEBERGER

PROFESSIONAL SEAL

REVISION RECORD

NO.	DATE	DESCRIPTION	BY

PROJECT NAME: KILLIAN CREEK WWTP PHASE 3 UPGRADE

DRAWING TITLE: PROPOSED SBR NO. 3 & 4 POST EQ PLAN

PROJ. MGR.:	CRF
DESIGN BY:	CRF
DRAWN BY:	NS/CH
PROJ. DATE:	SEPT. 2018

DRAWING NUMBER:

G.19 OF 168

WKD PROJ. NO.:

20170294.00.CL

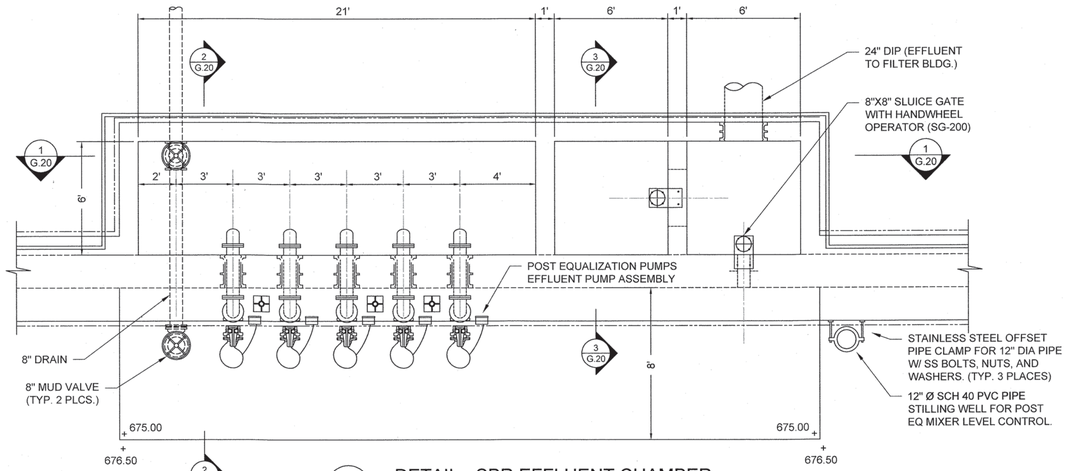

C G.19 DETAIL - SBR EFFLUENT CHAMBER
SCALE: 1/4" = 1'-0"

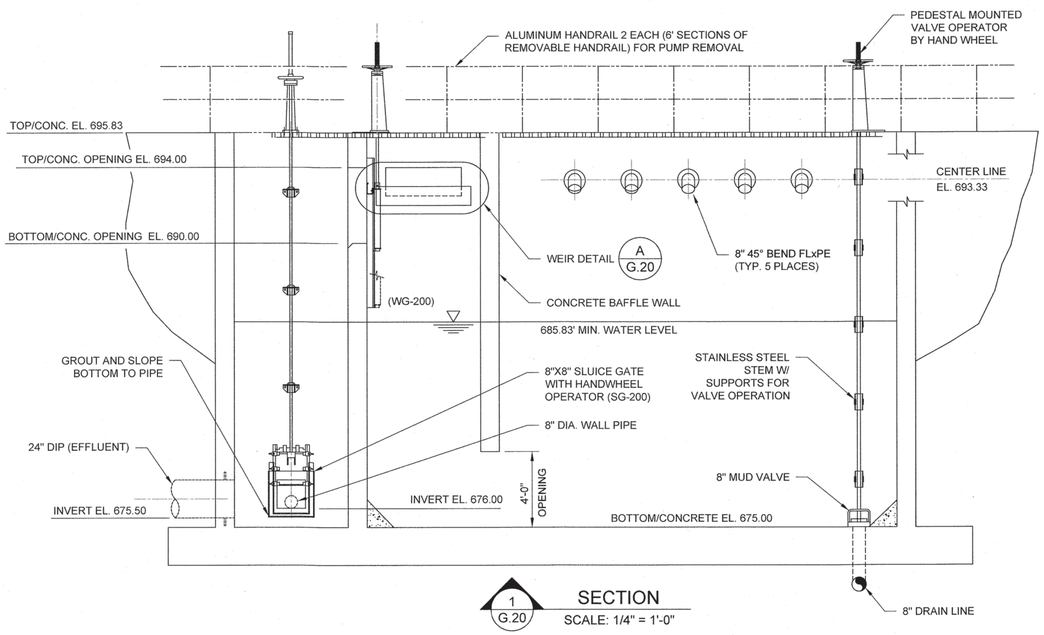

1 G.20 SECTION
SCALE: 1/4" = 1'-0"

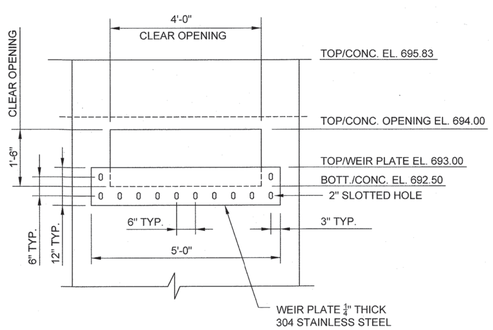

A G.20 WEIR DETAIL
SCALE: 1/2" = 1'-0"

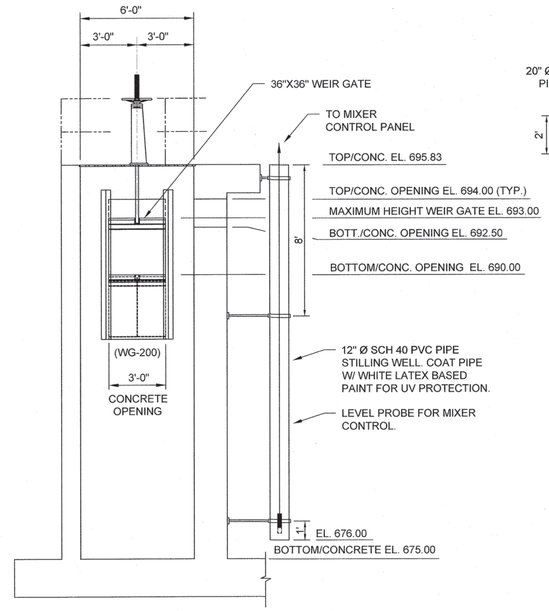

3 G.20 SECTION
SCALE: 1/4" = 1'-0"

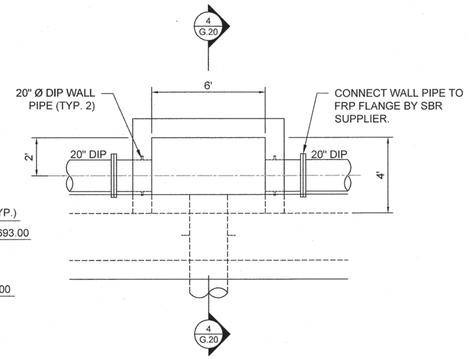

B G.19 INFLUENT ZONE DETAIL
SCALE: 1/4" = 1'-0"

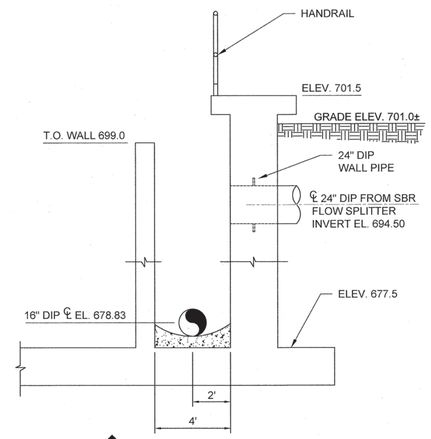

4 G.20 SECTION
SCALE: 1/4" = 1'-0"

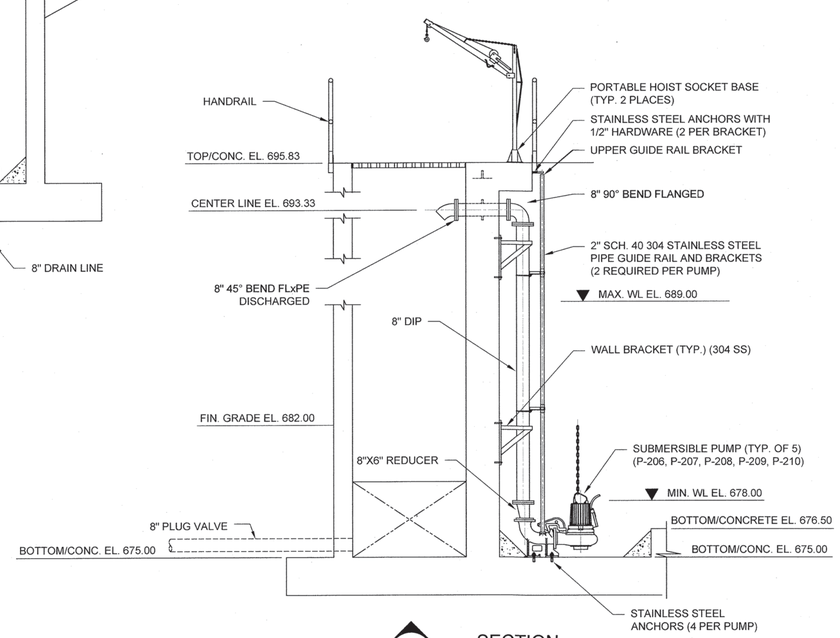

2 G.20 SECTION
SCALE: 1/4" = 1'-0"

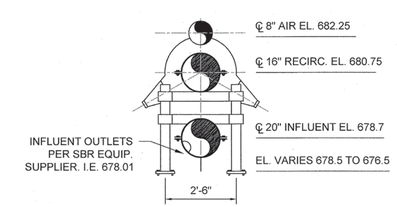

5 G.19 TYPICAL SBR JET AERATION HEAD
SCALE: 3/8" = 1'-0"

WK DICKSON
community infrastructure consultants
616 COLONNADE DRIVE
CHARLOTTE, NC 28205
(t)704-334-5348
(f)704-334-0078
WWW.WKDICKSON.COM
NC LICENSE NO.F-0374

NORTH CAROLINA PROFESSIONAL SEAL 8802 ENGINEER CHARLES R. FROMBERGER

PROFESSIONAL SEAL

REVISION RECORD

NO.	DATE	DESCRIPTION	BY

- NOT RELEASED FOR CONSTRUCTION -

FINAL DRAWINGS -

PROJECT NAME: KILLIAN CREEK WWTP PHASE 3 UPGRADE

DRAWING TITLE: SBR & DIGESTER SECTIONS & DETAILS SHEET 1

PROJ. MGR.:	CRF
DESIGN BY:	CRF
DRAWN BY:	NS/CH
PROJ. DATE:	SEPT. 2018

DRAWING NUMBER:

G.20 OF 168

WKD PROJ. NO.: 20170294.00.CL

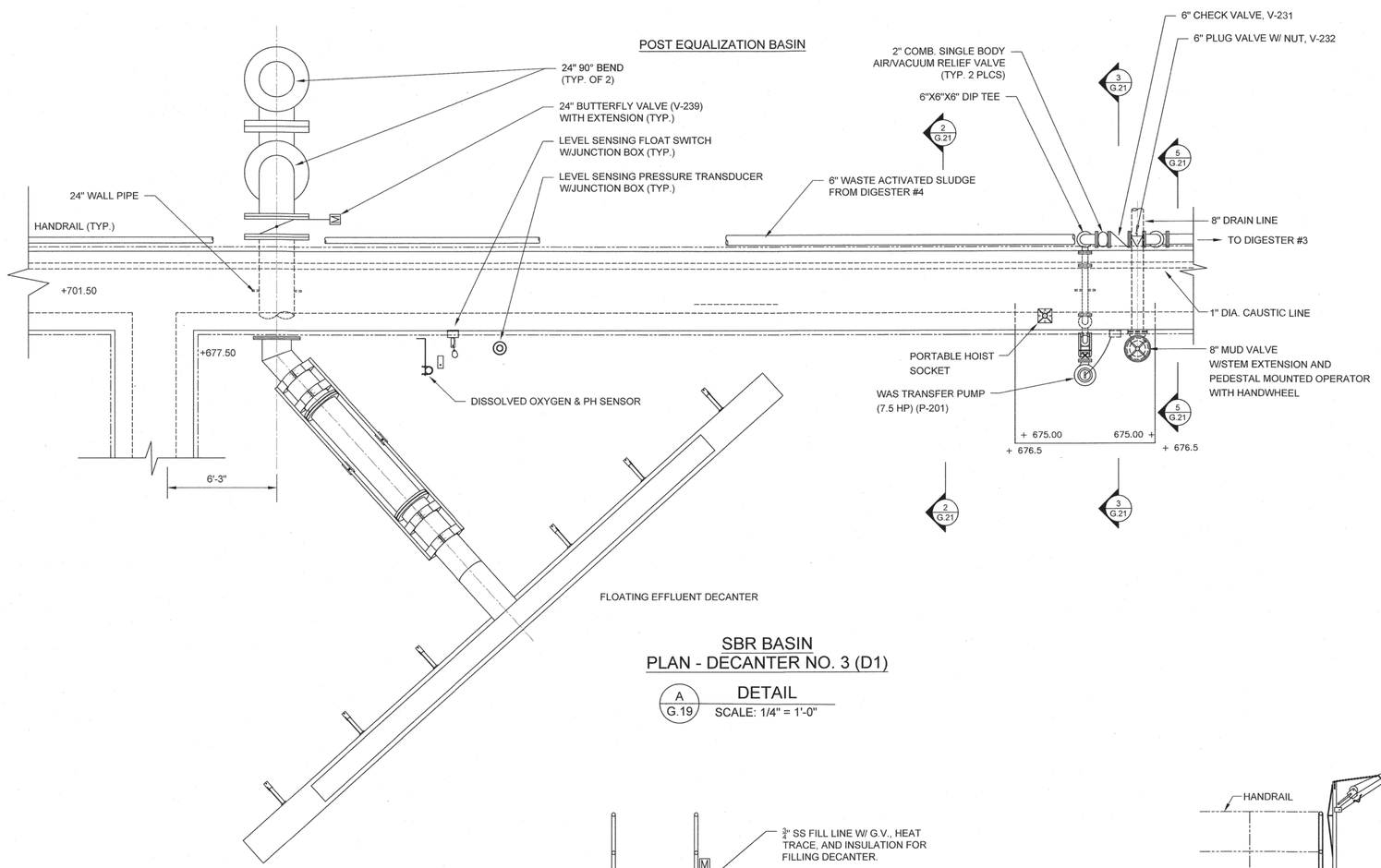

SBR BASIN
PLAN - DECANTER NO. 3 (D1)

A G.19 DETAIL
SCALE: 1/4" = 1'-0"

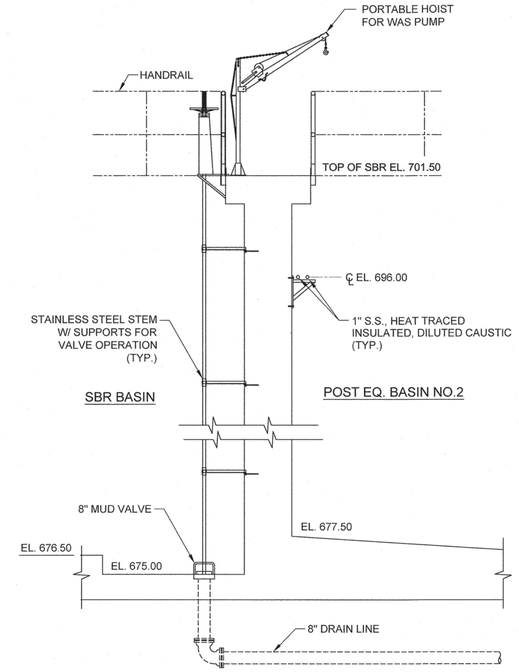

5 G.21 SECTION VIEW - MUD VALVE
SCALE: 1/4" = 1'-0"

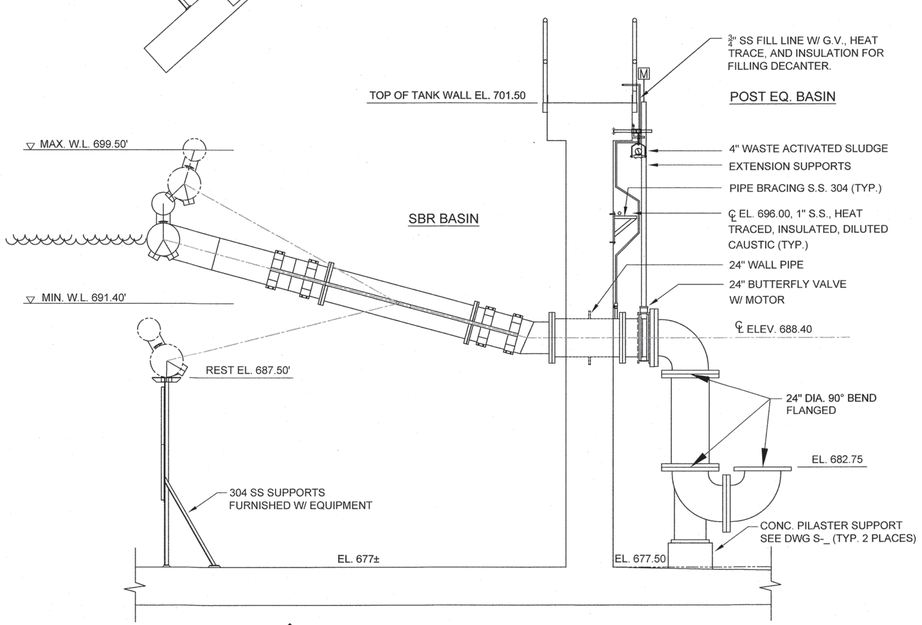

2 G.21 SECTION - DECATER END VIEW
SCALE: 1/4" = 1'-0"

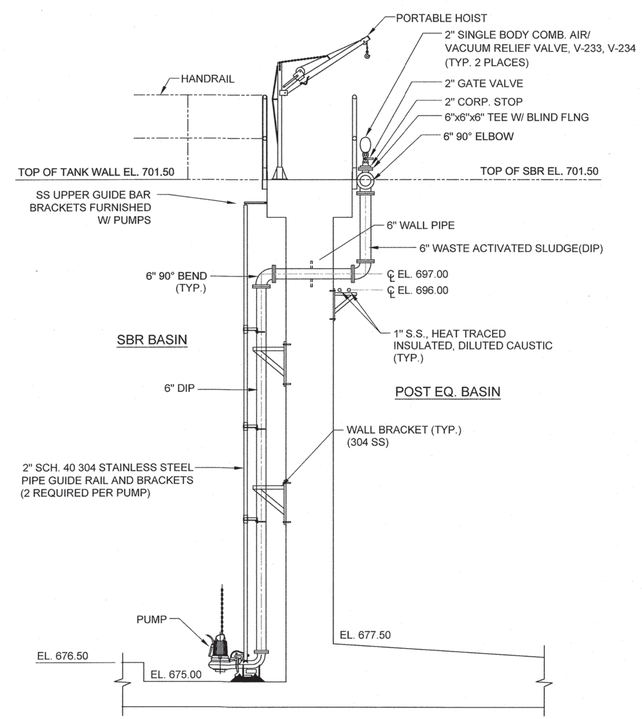

3 G.21 SECTION - TRANSFER PUMP DETAIL (TYP. 2 PLACES)
SCALE: 1/4" = 1'-0"

WK DICKSON
community infrastructure consultants
616 COLONNADE DRIVE
CHARLOTTE, NC 28205
(t)704-334-5348
(f)704-334-0078
WWW.WKDICKSON.COM
NC LICENSE NO.F-0374

NORTH CAROLINA PROFESSIONAL SEAL ENGINEER 8807 CHARLES R. FRONEBERGER 11-5-18

PROFESSIONAL SEAL

NO.	DATE	DESCRIPTION	BY

REVISION RECORD

- NOT RELEASED FOR CONSTRUCTION -

FINAL DRAWINGS -

PROJECT NAME: KILLIAN CREEK WWTP PHASE 3 UPGRADE

DRAWING TITLE: SBR & DIGESTER SECTIONS & DETAILS SHEET 2

PROJ. MGR.:	CRF
DESIGN BY:	CRF
DRAWN BY:	NS/CH
PROJ. DATE:	SEPT. 2018

DRAWING NUMBER:

G.21 OF 168

WKD PROJ. NO.: 20170294.00.CL

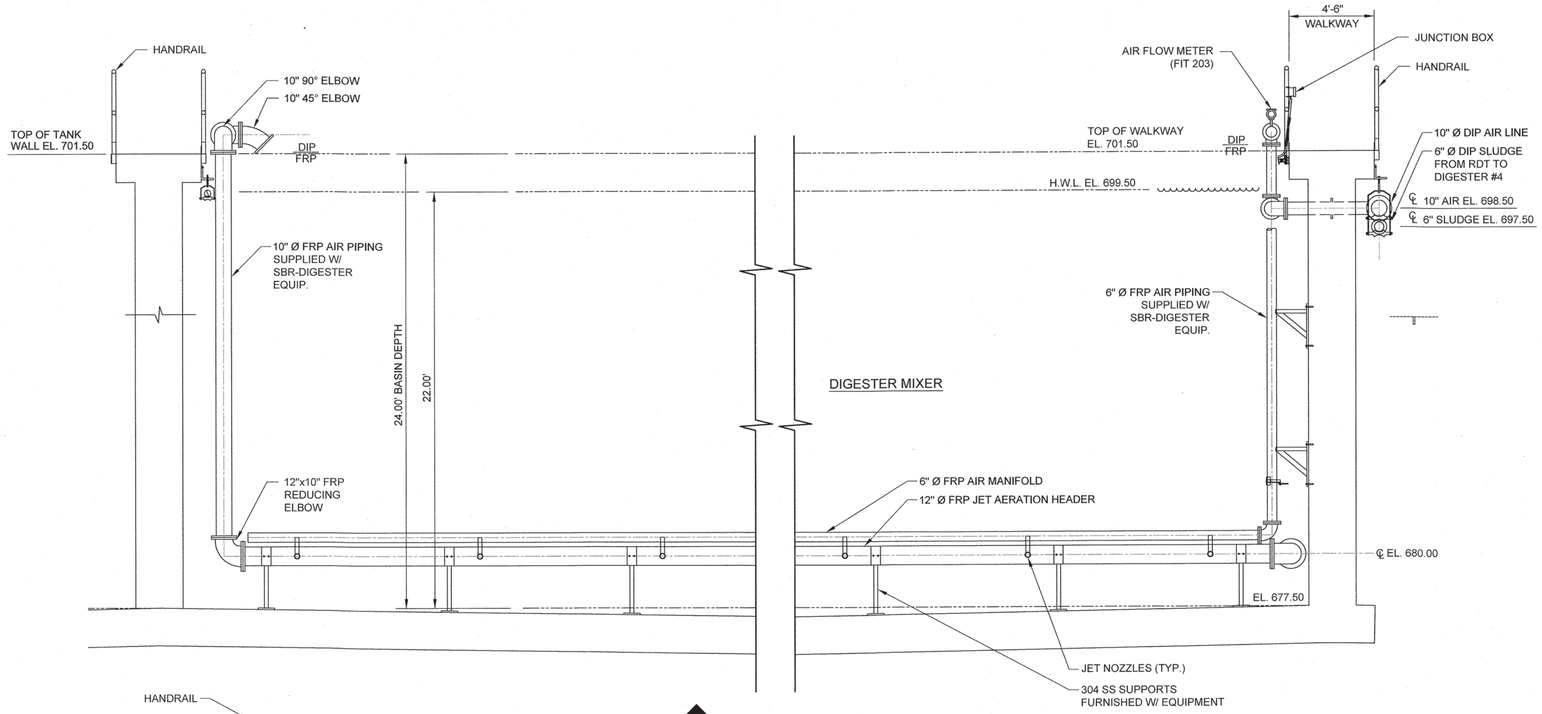

2 G.18 SECTION (TYP. 4 PLACES)
SCALE: 1/4" = 1'-0"

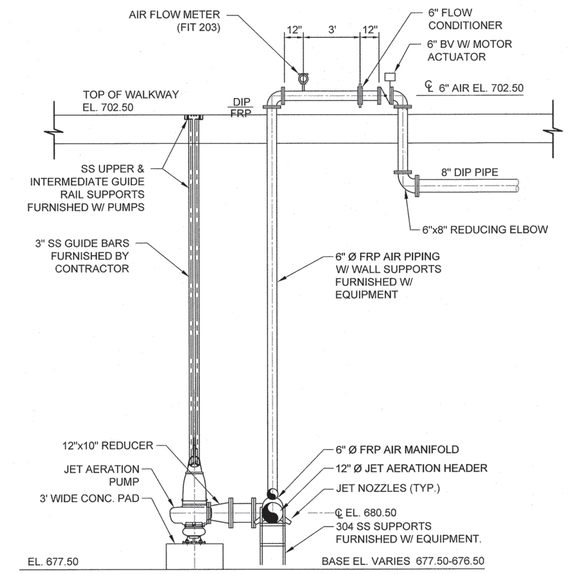

1 G.18 SECTION (TYP. 2 PLACES)
SCALE: 1/4" = 1'-0"

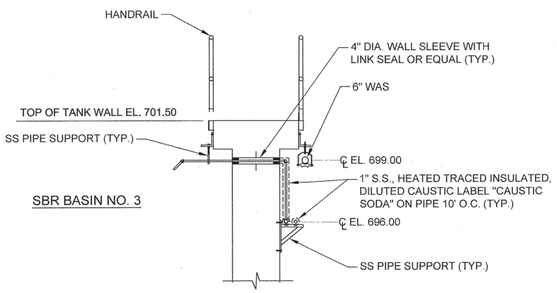

4 G.19 SECTION
SCALE: 1/4" = 1'-0"

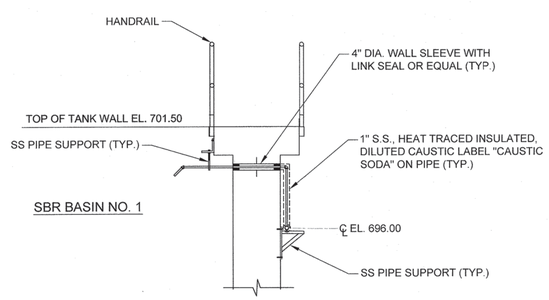

5 G.19 SECTION
SCALE: 1/4" = 1'-0"

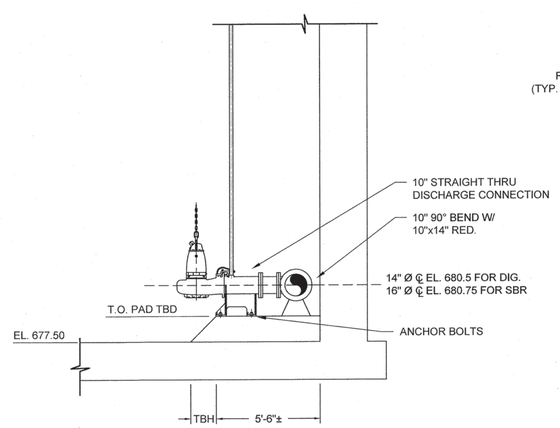

3 G.22 DIGESTER/SBR PUMP SECTION
SCALE: 1/4" = 1'-0"

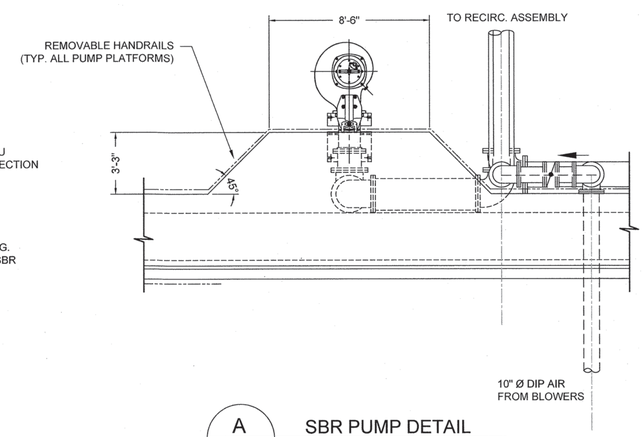

A G.22 SBR PUMP DETAIL
SCALE: 1/4" = 1'-0"

WK DICKSON
community infrastructure consultants
616 COLONNADE DRIVE
CHARLOTTE, NC 28205
(t)704-334-5348
(f)704-334-0078
WWW.WKDICKSON.COM
NC LICENSE NO.F-0374

NORTH CAROLINA PROFESSIONAL SEAL 8802 ENGINEER CHARLES R. FROWEBERGER

PROFESSIONAL SEAL

REVISION RECORD

NO.	DATE	DESCRIPTION	BY

PROJECT NAME: KILLIAN CREEK WWTP PHASE 3 UPGRADE

DRAWING TITLE: SBR & DIGESTER SECTIONS & DETAILS SHEET 3

PROJ. MGR.:	CRF
DESIGN BY:	CRF
DRAWN BY:	NS/CH
PROJ. DATE:	SEPT. 2018

DRAWING NUMBER:

G.22 OF 168

WKD PROJ. NO.: 20170294.00.CL

FINAL DRAWINGS - NOT RELEASED FOR CONSTRUCTION

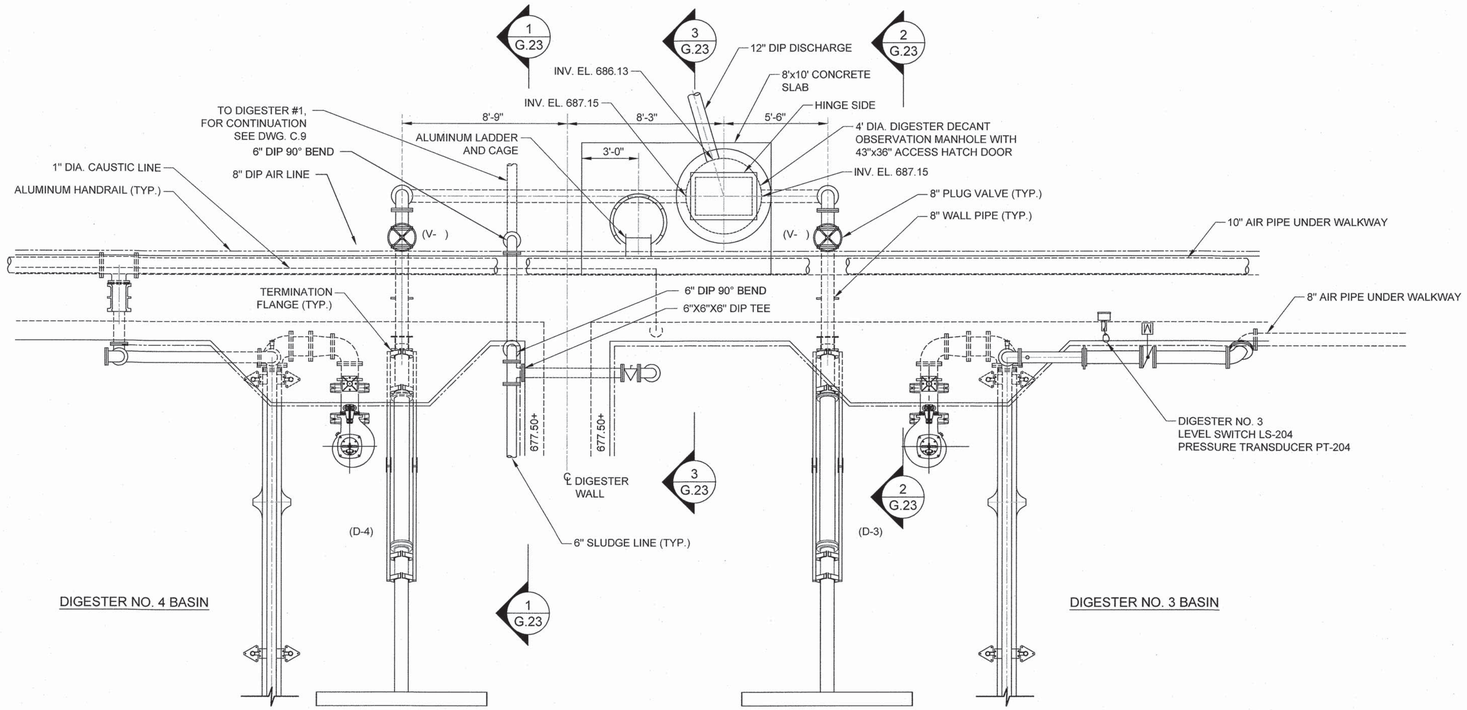

E G.18 FLOATING WEIR DETAIL
SCALE: 1/4" = 1'-0"

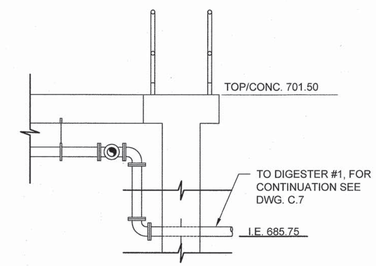

1 G.23 SECTION
SCALE: 1/4" = 1'-0"

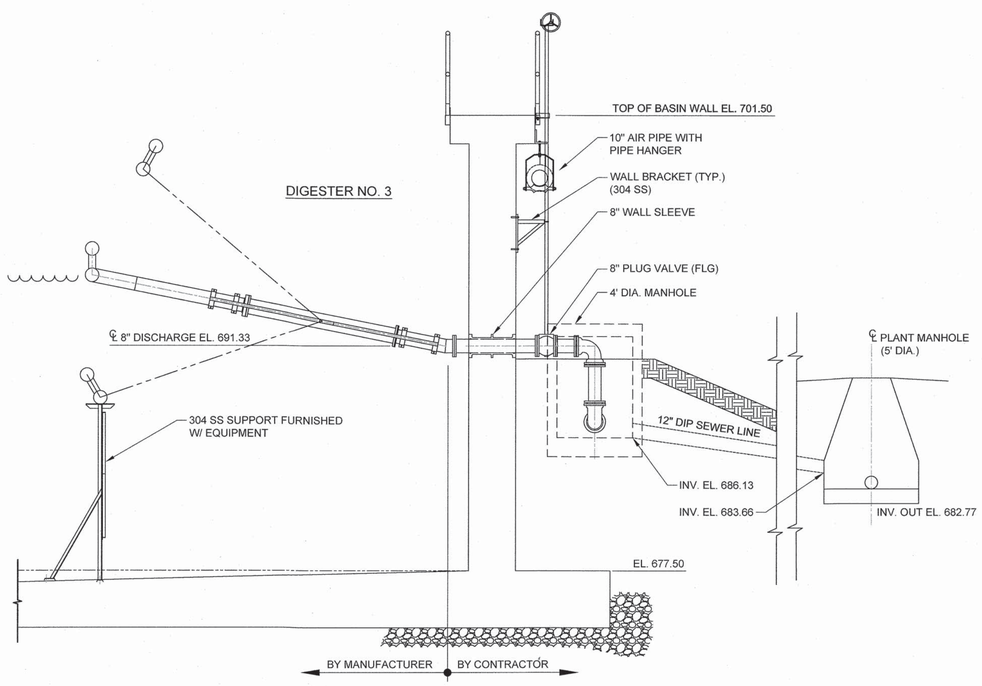

2 G.23 SECTION
SCALE: 1/4" = 1'-0"

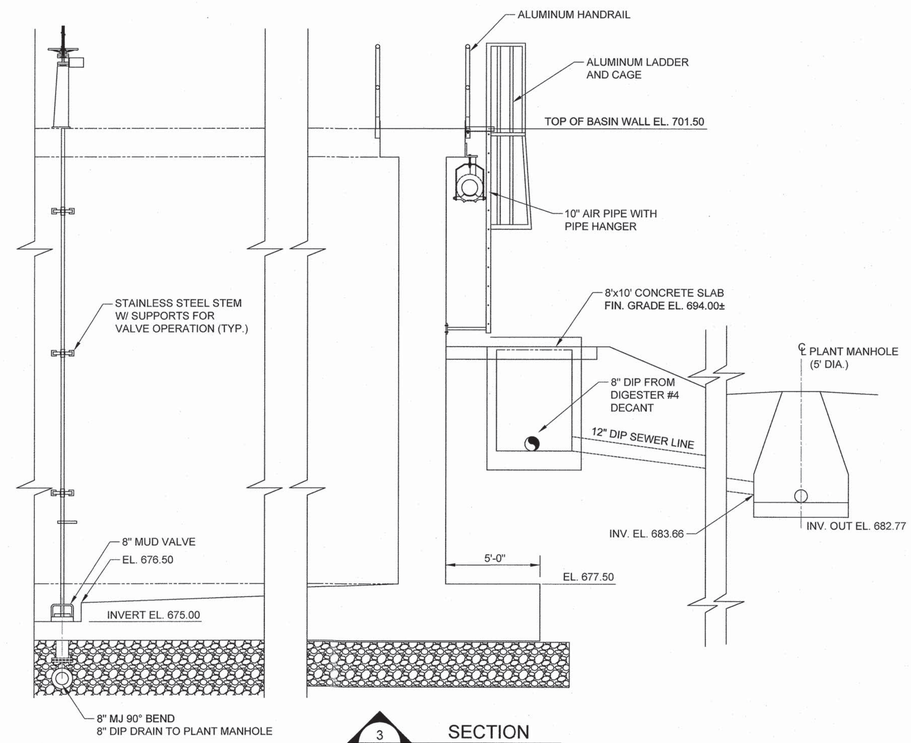

3 G.23 SECTION
SCALE: 1/4" = 1'-0"

WK DICKSON
community infrastructure consultants
616 COLONNADE DRIVE
CHARLOTTE, NC 28205
(t)704-334-5348
(f)704-334-0078
WWW.WKDICKSON.COM
NC LICENSE NO.F-0374

NORTH CAROLINA PROFESSIONAL ENGINEER SEAL 8802 CHARLES R. FRONEBERGER 11-5-18

PROFESSIONAL SEAL

REVISION RECORD

NO.	DATE	DESCRIPTION	BY

- NOT RELEASED FOR CONSTRUCTION -

FINAL DRAWINGS

PROJECT NAME: KILLIAN CREEK WWTP PHASE 3 UPGRADE

DRAWING TITLE: SBR & DIGESTER SECTIONS & DETAILS SHEET 4

PROJ. MGR.:	CRF
DESIGN BY:	CRF
DRAWN BY:	NS/CH
PROJ. DATE:	SEPT. 2018

DRAWING NUMBER:

G.23 OF 168

WKD PROJ. NO.: 20170294.00.CL

ANALYZER AND POWER SUPPLY TO BE MOUNTED TO HANDRAIL. DO NOT ROUTE INTERCONNECTING CABLES IN ANY CONDUIT CONTAINING POWER WIRING. INTERCONNECTING CABLE FROM THE ANALYZER TO THE SBR PROCESS CONTROL PANEL.

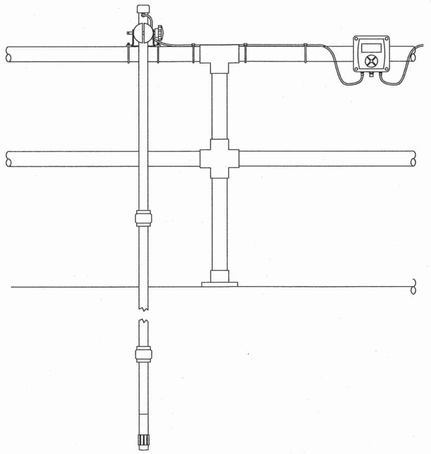

A G.19 D.O. & PH PROBE DETAIL
NOT TO SCALE

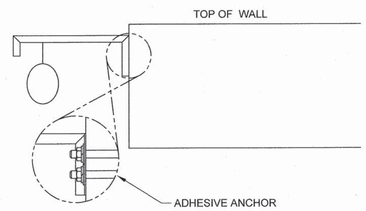

B G.19 FLOAT SWITCH DETAIL
NOT TO SCALE

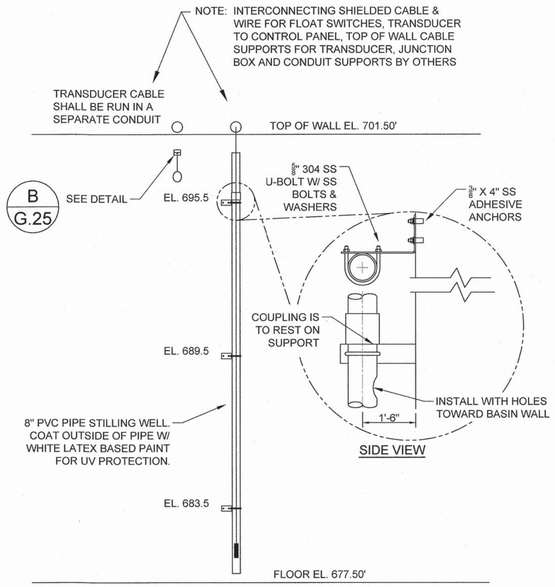

C G.19 STILLING WELL DETAIL
NOT TO SCALE

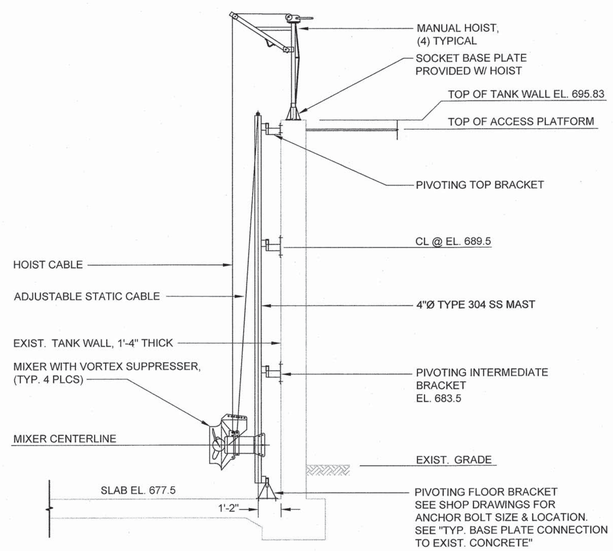

D G.19 NEW POST-EQUALIZATION BASIN MIXER DETAIL (TYP. 4 PLCS)
SCALE: 1/4" = 1'-0"

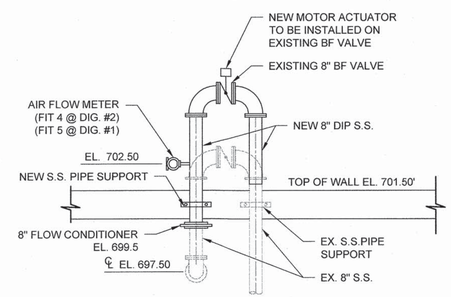

E G.15 AIR PIPING MODIFICATION (TYP. 2 PLCS.)
SCALE: 1/4" = 1'-0"

WK DICKSON
community infrastructure consultants
616 COLONNADE DRIVE
CHARLOTTE, NC 28205
(t)704-334-5348
(f)704-334-0078
WWW.WKDICKSON.COM
NC LICENSE NO.F-0374

NORTH CAROLINA PROFESSIONAL SEAL 18221 ENGINEER CHARLES R. FRONEBERGER

PROFESSIONAL SEAL

REVISION RECORD

NO.	DATE	DESCRIPTION	BY

- NOT RELEASED FOR CONSTRUCTION

FINAL DRAWINGS -

PROJECT NAME: KILLIAN CREEK WWTP PHASE 3 UPGRADE

DRAWING TITLE: SBR & DIGESTER DETAILS

PROJ. MGR.:	CRF
DESIGN BY:	CRF
DRAWN BY:	NS/CH
PROJ. DATE:	SEPT. 2018

DRAWING NUMBER:

G.24 OF 168

WKD PROJ. NO.: 20170294.00.CL

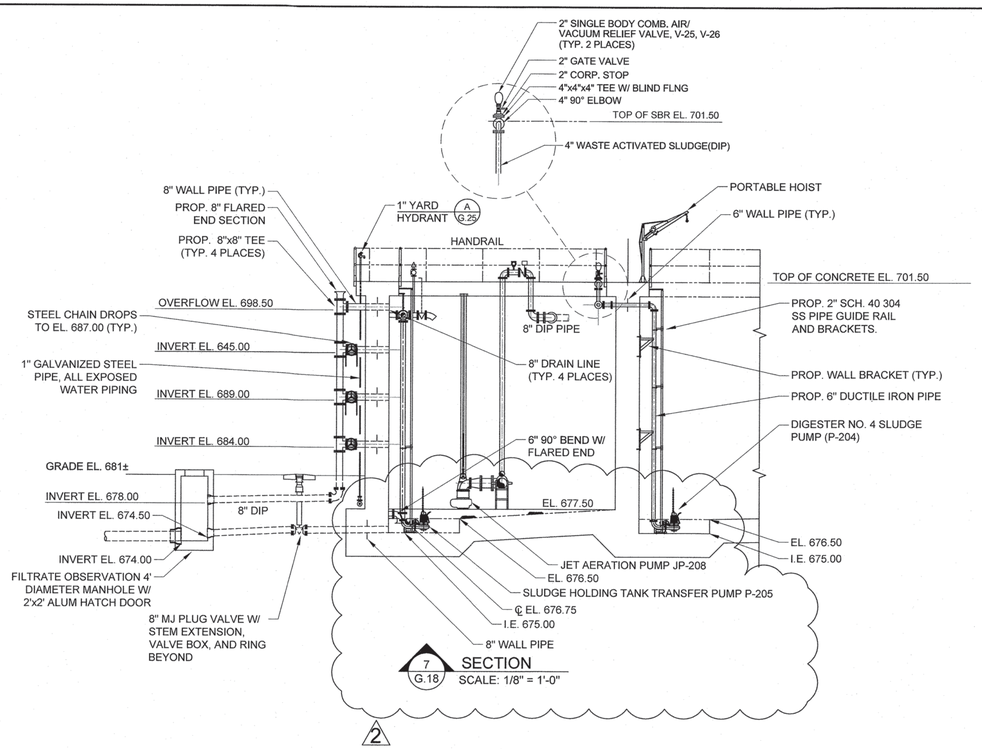

7 G.18 SECTION
SCALE: 1/8" = 1'-0"

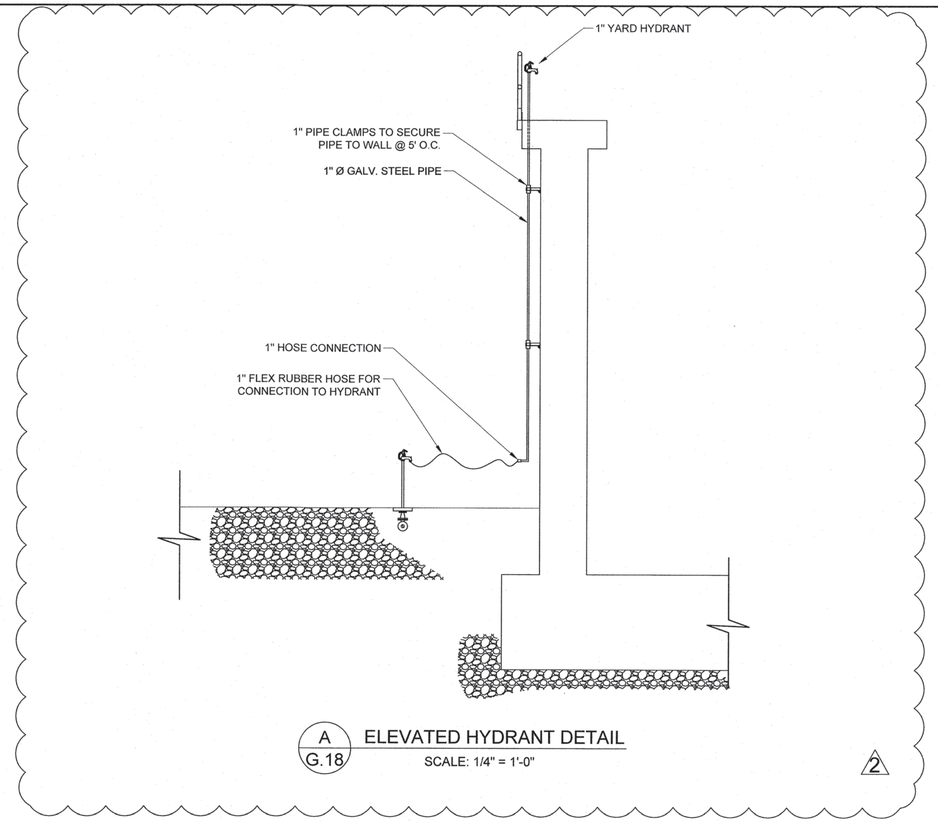

A G.18 ELEVATED HYDRANT DETAIL
SCALE: 1/4" = 1'-0"

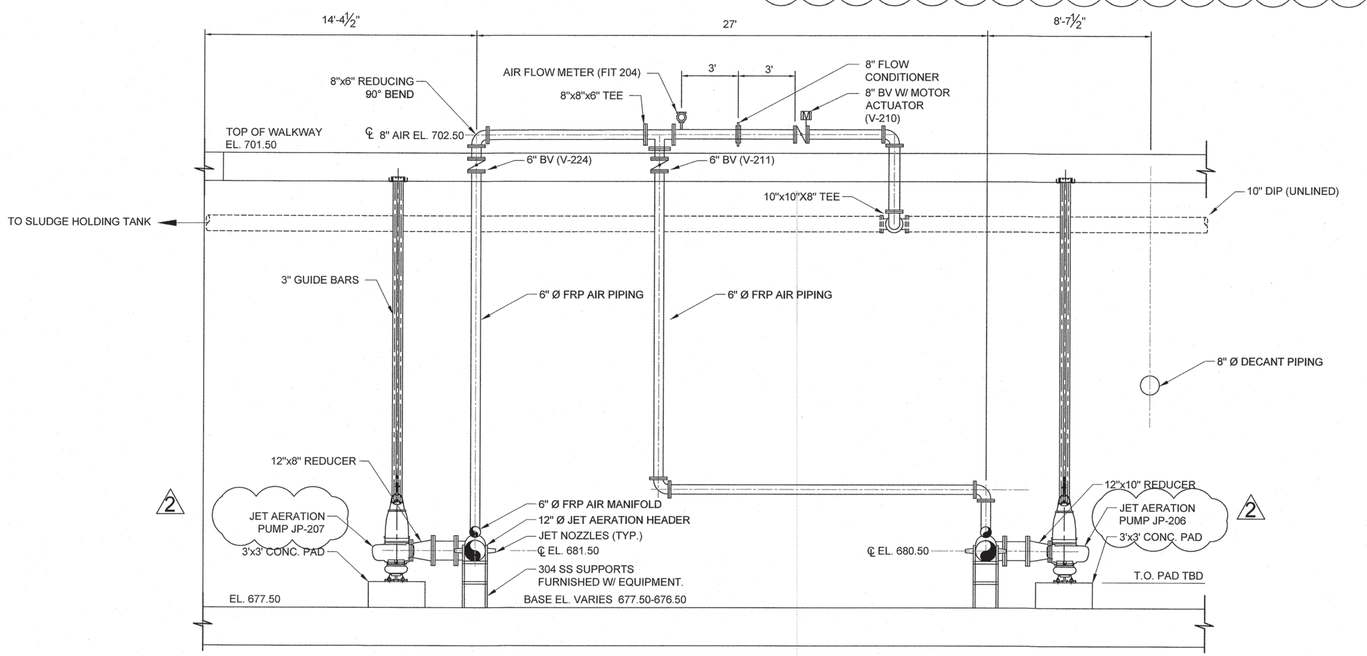

8 G.18 SECTION
SCALE: 1/4" = 1'-0"

WK DICKSON
community infrastructure consultants
616 COLONNADE DRIVE
CHARLOTTE, NC 28205
(t)704-334-5348
(f)704-334-0078
WWW.WKDICKSON.COM
NC LICENSE NO.F-0374

NORTH CAROLINA PROFESSIONAL SEAL 8802 4-23-19 ENGINEER CHARLES R. FRONEBERGER

PROFESSIONAL SEAL

REVISION RECORD

NO.	DATE	DESCRIPTION	BY
1	10/9/18	ISSUE FOR OWNER/NCDEQ REVIEW	CRF
2	9/17/19	LABELING TO JET AERATION, DETAIL A	CRF

PROJECT NAME: KILLIAN CREEK WWTP PHASE 3 UPGRADE

DRAWING TITLE: SBR & DIGESTER SECTIONS & DETAILS SHEET 6

PROJ. MGR.:	CRF
DESIGN BY:	CRF
DRAWN BY:	NS/CH
PROJ. DATE:	SEPT. 2018

DRAWING NUMBER:
G.25 OF 168
WKD PROJ. NO.:
20170294.00.CL

FINAL DRAWINGS - NOT RELEASED FOR CONSTRUCTION

COPYRIGHT © W.K. DICKSON & CO., INC., ALL RIGHTS RESERVED. REPRODUCTION OR USE BY ANY CONTENTS OF THIS DOCUMENT, ADDITIONAL COPIES OF THIS DOCUMENT, OR ANY PART THEREOF, WITHOUT WRITTEN CONSENT OF W.K. DICKSON & CO., INC., IS PROHIBITED. ONLY COPIES RECEIVED FROM W.K. DICKSON & CO., INC. BY OFFICIAL WRITTEN CONSENT OF W.K. DICKSON & CO., INC. IS PROVIDED TO BE VALID AND CONTROLLED.

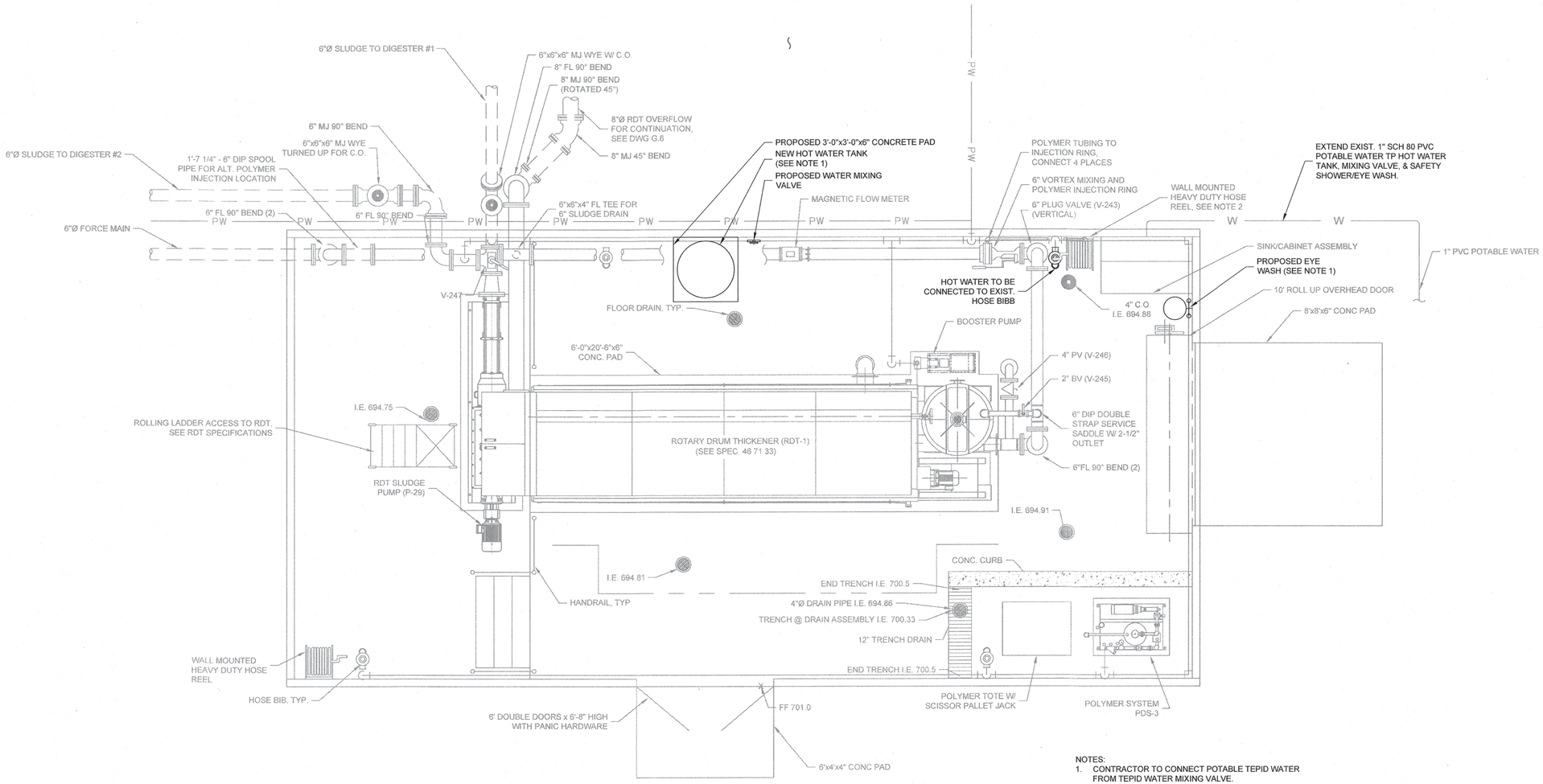

NOTES:
1. CONTRACTOR TO CONNECT POTABLE TEPID WATER FROM TEPID WATER MIXING VALVE.

PLAN EXISTING RDT BUILDING #7

SCALE: 3/8" = 1'-0"

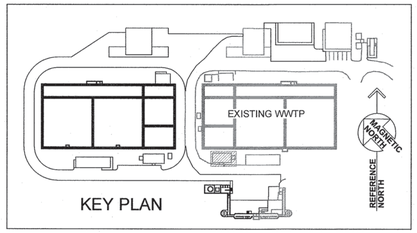

KEY PLAN

WK DICKSON
community infrastructure consultants
616 COLONNADE DRIVE
CHARLOTTE, NC 28205
(t)704-334-5348
(f)704-334-0078
WWW.WKDICKSON.COM
NC LICENSE NO.F-0374

NORTH CAROLINA PROFESSIONAL ENGINEER SEAL 8802 11-5-18 CHARLES R. FRONSBERGER

PROFESSIONAL SEAL

NO.	DATE	DESCRIPTION	BY

REVISION RECORD

- NOT RELEASED FOR CONSTRUCTION

FINAL DRAWINGS -

PROJECT NAME: KILLIAN CREEK WWTP PHASE 3 UPGRADE

DRAWING TITLE: EXISTING RDT BUILDING PLAN

PROJ. MGR.:	CRF
DESIGN BY:	CRF
DRAWN BY:	NS/CH
PROJ. DATE:	SEPT. 2018

DRAWING NUMBER:

G.26 OF 168

WKD PROJ. NO.:

20170294.00.CL

FILE PATH:L:\Projects\LPC\L0017\00\00\CL - Killian Creek WWTP Ph 3 Upgrade Const\CADD\Plan Set\20170294_5_SHT_RDT Building.dwg_Projects\LPC\L0017\00\00\CL - Killian Creek WWTP Ph 3 Upgrade Const\CADD\Plan Set\20170294_5_SHT_RDT Building.dwg, BWORBDC, 11/7/2018 8:15:01 PM

COPYRIGHT © WK DICKSON & CO., INC., ALL RIGHTS RESERVED. REPRODUCTION OR USE OF THE CONTENT OF THE DOCUMENT, ADDITIONS OR MODIFICATIONS THERETO, IN WHOLE OR IN PART, WITHOUT WRITTEN PERMISSION OF WK DICKSON & CO., INC. IS PROHIBITED. ELECTRONIC COPIES OF THIS DOCUMENT, MARKED WITH AN ORIGINAL SIGNATURE AND SEAL SHALL BE CONSIDERED TO BE VALID, TRUE COPIES.

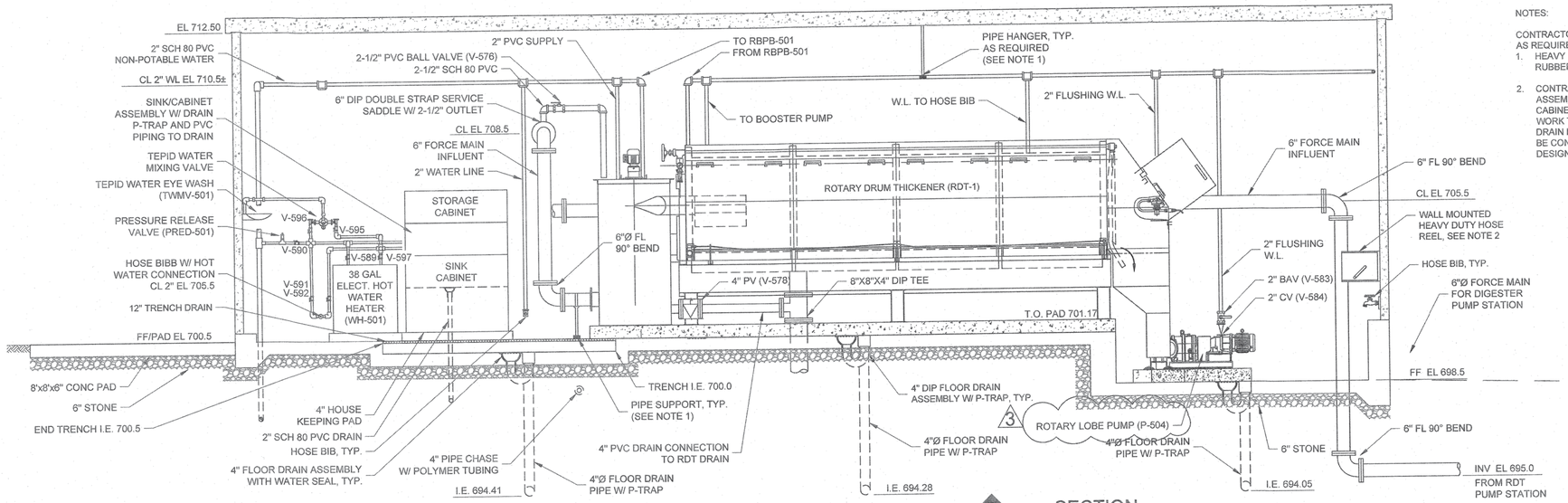

1 G.27 SECTION
SCALE: 3/8" = 1'-0"

NOTES:

CONTRACTOR SHALL BE RESPONSIBLE FOR ALL PIPE HANGERS/SUPPORTS AS REQUIRED FOR PIPING, PER SPECIFICATION 40 20 00.

1. HEAVY DUTY WALL MOUNTED HOSE REEL WITH BRAKE 50 FEET OF 3/4" RUBBER HOSE RATED AT 150 PSI, TYPICAL 2 PLCS.
2. CONTRACTOR TO PROVIDE A 48"(L)x30"(D)x35.2"(H) SINK CABINET ASSEMBLY WITH UPPER 48"(L)x13"(D)x31"(H) STORAGE CABINET. SINK CABINET SHALL INCLUDE SINK, FILLER PANELS, BLACK EPOXY RESIN WORK TOP W/ BACK SPLASH , MIXING FAUCET, PLASTIC P-TRAP AND DRAIN PIPING TO ADJACENT FLOOR DRAIN. STORAGE CABINET SHALL BE CONSTRUCTED OF 18-GAUGE STEEL OF ONE PIECE WRAP AROUND DESIGN WITH FRAMED GLASS HINGE DOOR AND FILLER REAR.

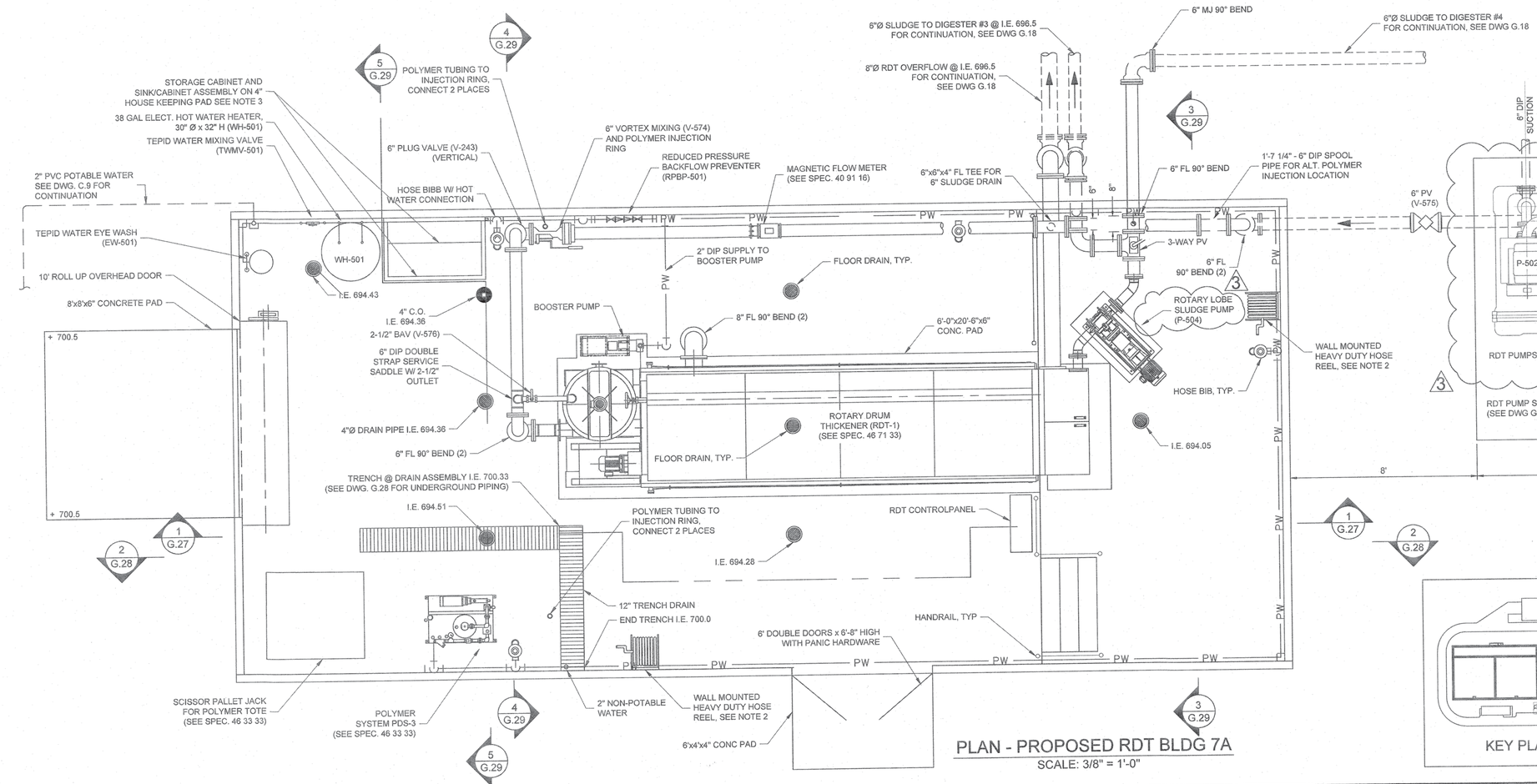

PLAN - PROPOSED RDT BLDG 7A
SCALE: 3/8" = 1'-0"

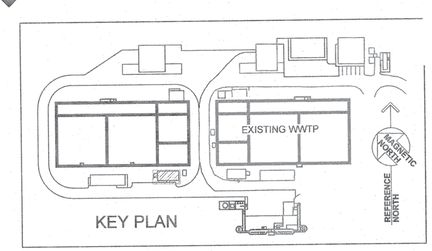

KEY PLAN

WK DICKSON
community infrastructure consultants
616 COLONNADE DRIVE
CHARLOTTE, NC 28205
(t)704-334-5348
(f)704-334-0078
WWW.WKDICKSON.COM
NC LICENSE NO.F-0374

NORTH CAROLINA PROFESSIONAL SEAL 8802 ENGINEER CHARLES P. FRONEBERGER

PROFESSIONAL SEAL

REVISION RECORD

NO.	DATE	DESCRIPTION	BY
1	10/8/18	ISSUE FOR OWNER/NCDEQ REVIEW	CRF
2	5/21/19	REVISED VALVES	WBK
3	9/17/19	PUMP TAGS	CRF
4	11/11/19	REVISIONS PER NCDEQ REVIEW	CRF

NOT RELEASED FOR CONSTRUCTION

FINAL DRAWINGS -

PROJECT NAME: KILLIAN CREEK WWTP PHASE 3 UPGRADE

DRAWING TITLE: PROPOSED RDT BUILDING PLAN & SECTIONS

PROJ. MGR.:	CRF
DESIGN BY:	CRF
DRAWN BY:	NS/CH
PROJ. DATE:	SEPT. 2018

DRAWING NUMBER:

G.27 OF 168

WKD PROJ. NO.:

20170294.00.CL

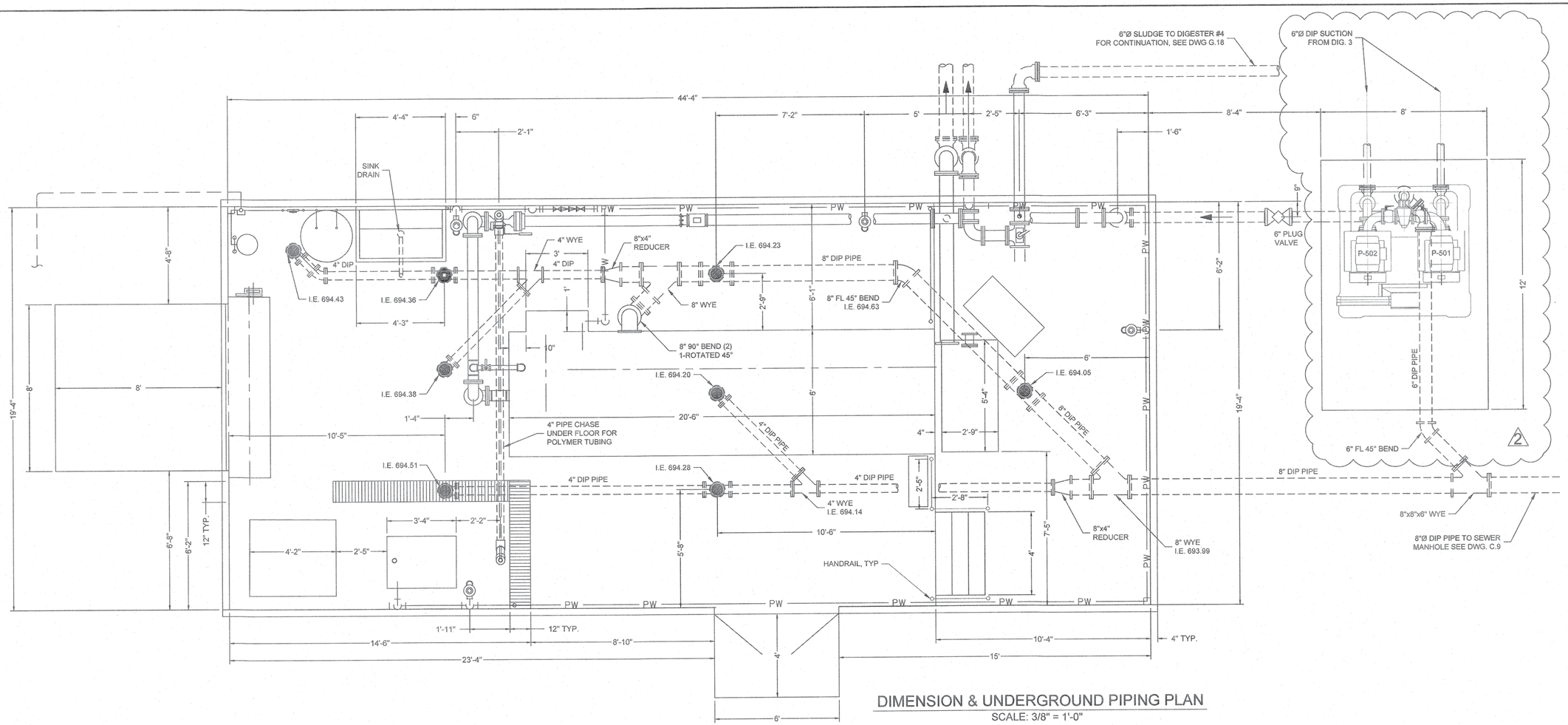

DIMENSION & UNDERGROUND PIPING PLAN

SCALE: 3/8" = 1'-0"

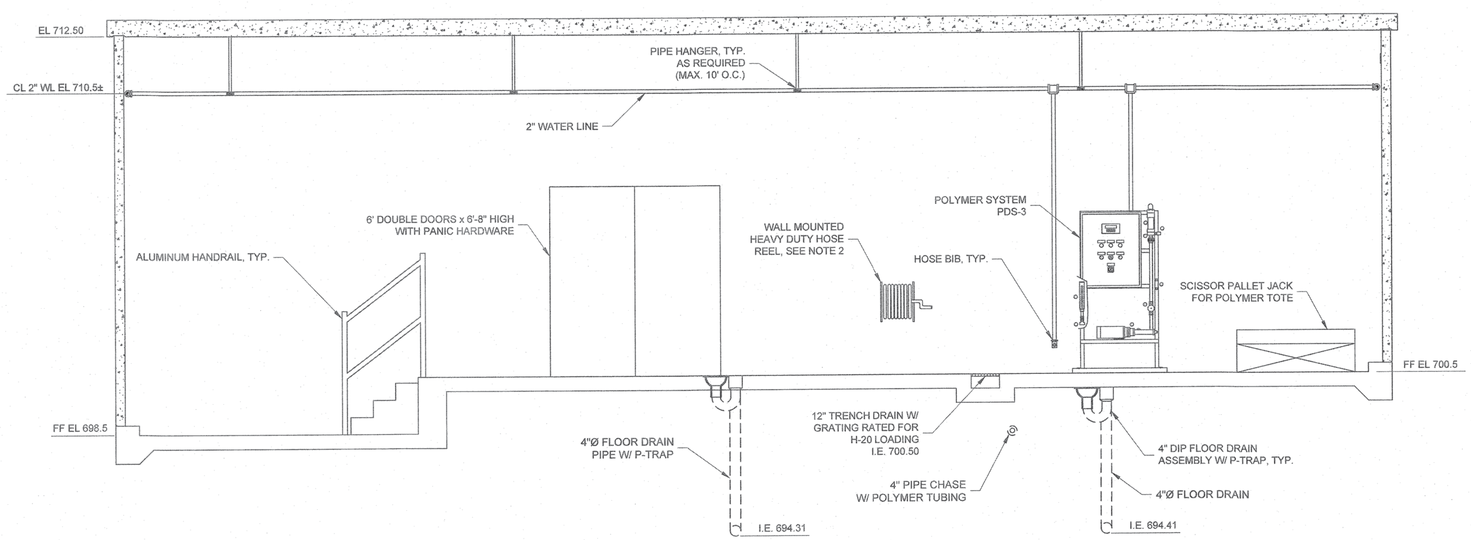

SECTION

2 / G.27

SCALE: 3/8" = 1'-0"

FINAL DRAWINGS - NOT RELEASED FOR CONSTRUCTION

WK DICKSON
community infrastructure consultants
616 COLONNADE DRIVE
CHARLOTTE, NC 28205
(t)704-334-5348
(f)704-334-0078
WWW.WKDICKSON.COM
NC LICENSE NO.F-0374

NORTH CAROLINA PROFESSIONAL SEAL 8802 ENGINEER CHARLES R. FRONEBERGER

PROFESSIONAL SEAL

REVISION RECORD

NO.	DATE	DESCRIPTION	BY
1	10/9/18	ISSUE FOR OWNER/NCDEQ REVIEW	CRF
2	11/11/19	MODIFICATION OF PUMP TAGS	CRF

PROJECT NAME: KILLIAN CREEK WWTP PHASE 3 UPGRADE

DRAWING TITLE: PROPOSED RDT BUILDING SECTIONS

PROJ. MGR.:	CRF
DESIGN BY:	CRF
DRAWN BY:	NS/CH
PROJ. DATE:	SEPT. 2018
DRAWING NUMBER:	G.28 OF 168
WKD PROJ. NO.:	20170294.00.CL

COPYRIGHT © W.K. DICKSON & CO., INC., ALL RIGHTS RESERVED. REPRODUCTION OR USE OF THE CONTENTS OF THIS DOCUMENT, ADDITIONS OR DELETIONS TO THIS DOCUMENT, IN WHOLE OR IN PART, WITHOUT WRITTEN CONSENT OF W.K. DICKSON & CO., INC., IS PROHIBITED. ONLY COPIES FROM THE ORIGINAL OF THIS DOCUMENT, MARKED WITH AN ORIGINAL SIGNATURE AND SEAL SHALL BE CONSIDERED TO BE VALID, TRUE COPIES.

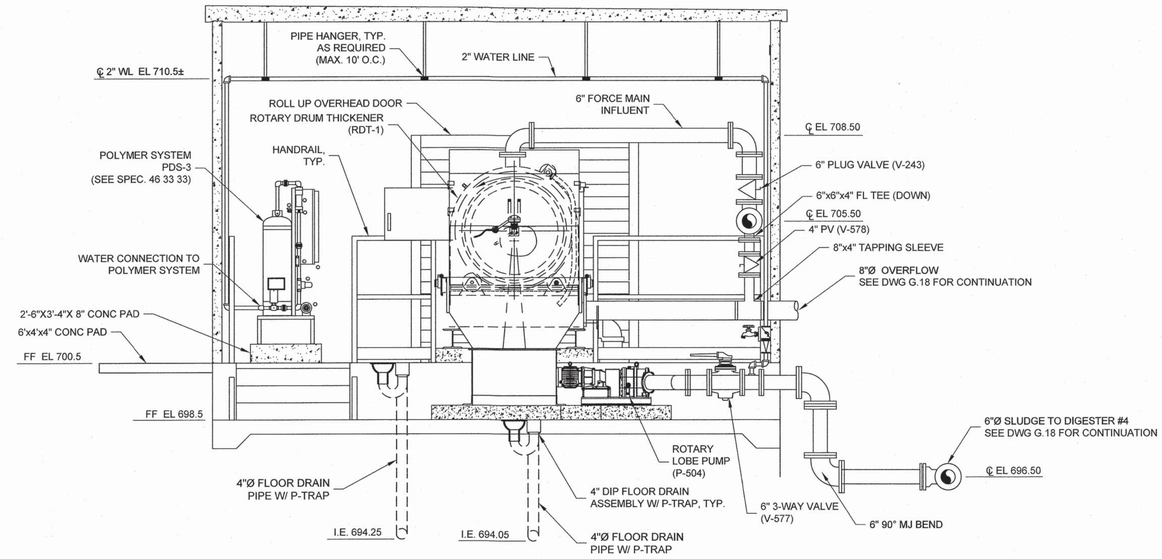

3 G.27 SECTION
SCALE: 3/8" = 1'-0"

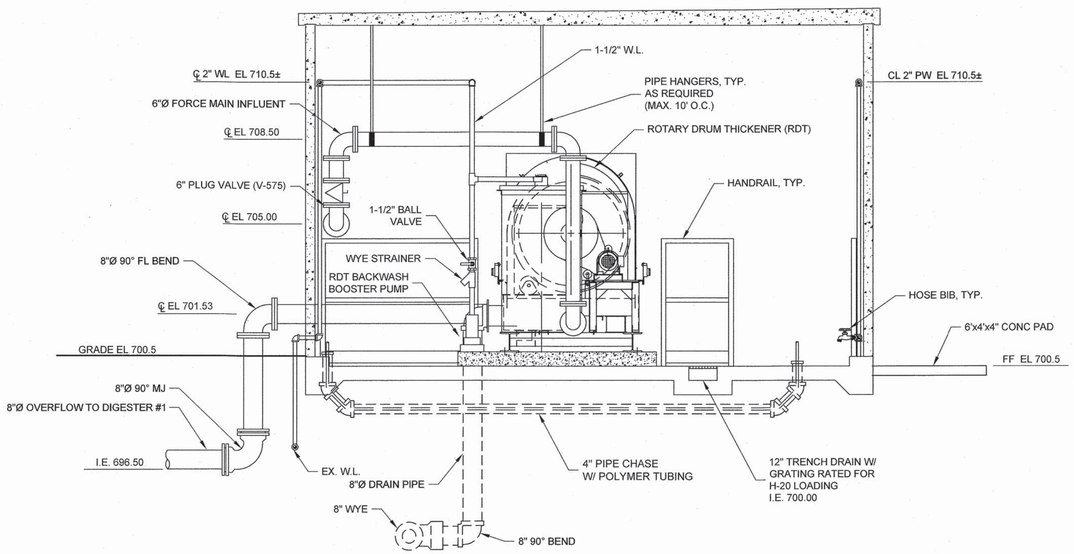

4 G.27 SECTION
SCALE: 3/8" = 1'-0"

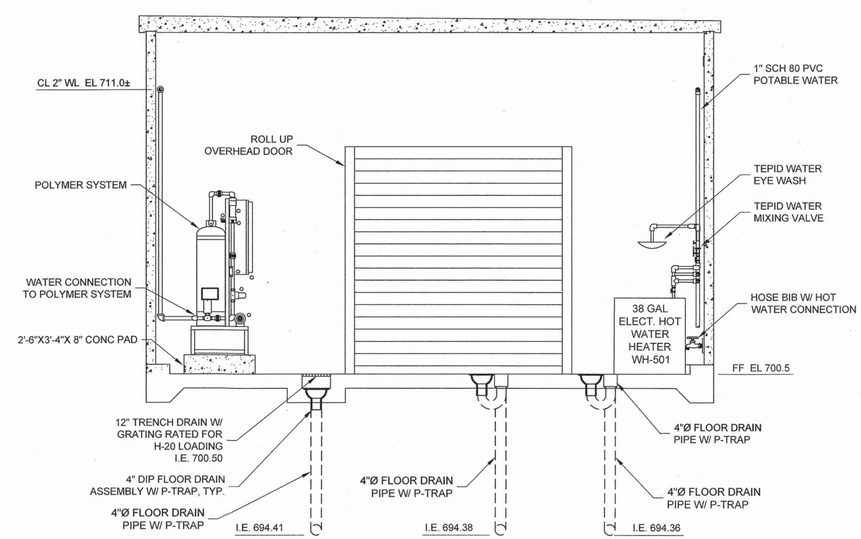

5 G.27 SECTION
SCALE: 3/8" = 1'-0"

COPYRIGHT © W.K. DICKSON & CO., INC., ALL RIGHTS RESERVED. REPRODUCTION OR USE OF THE CONTENTS OF THIS DOCUMENT, ADDITIONS OR DELETIONS TO THIS DOCUMENT, IN WHOLE OR IN PART, WITHOUT WRITTEN CONSENT OF W.K. DICKSON & CO., INC., IS PROHIBITED. ONLY COPIES FROM THE ORIGINAL OF THIS DOCUMENT, MARKED WITH AN ORIGINAL SIGNATURE AND SEAL SHALL BE CONSIDERED TO BE VALID, TRUE COPIES.

WK DICKSON
community infrastructure consultants
616 COLONNADE DRIVE
CHARLOTTE, NC 28205
(t)704-334-5348
(f)704-334-0078
WWW.WKDICKSON.COM
NC LICENSE NO.F-0374

NORTH CAROLINA PROFESSIONAL SEAL 8802 ENGINEER CHARLES R. FRONEBERGER
11-5-18
PROFESSIONAL SEAL

REVISION RECORD

NO.	DATE	DESCRIPTION	BY

PROJECT NAME: KILLIAN CREEK WWTP PHASE 3 UPGRADE

DRAWING TITLE: PROPOSED RDT BUILDING DETAILS

PROJ. MGR.:	CRF
DESIGN BY:	CRF
DRAWN BY:	NS/CH
PROJ. DATE:	SEPT. 2018
DRAWING NUMBER:	

G.29 OF 168

WKD PROJ. NO.: 20170294.00.CL

FINAL DRAWINGS - NOT RELEASED FOR CONSTRUCTION

COPYRIGHT © W.K. DICKSON & CO., INC., ALL RIGHTS RESERVED. REPRODUCTION OR USE OF THE CONTENTS OF THIS DOCUMENT, ADDITIONS OR MODIFICATIONS THERETO, IN WHOLE OR IN PART, WITHOUT WRITTEN PERMISSION OF W.K. DICKSON & CO., INC., IS PROHIBITED. ONLY COPIES FROM THE ORIGINAL OF THIS DOCUMENT MARKED WITH AN ORIGINAL SIGNATURE AND SEAL SHALL BE CONSIDERED TO BE VALID, TRUE COPIES.

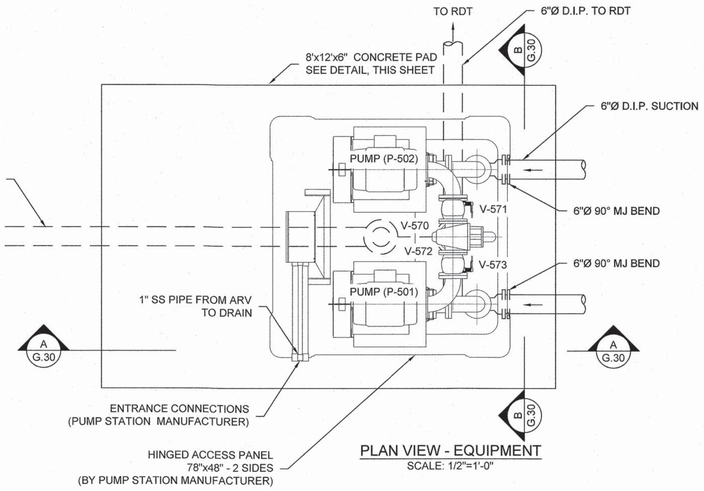

PLAN VIEW - EQUIPMENT
SCALE: 1/2"=1'-0"

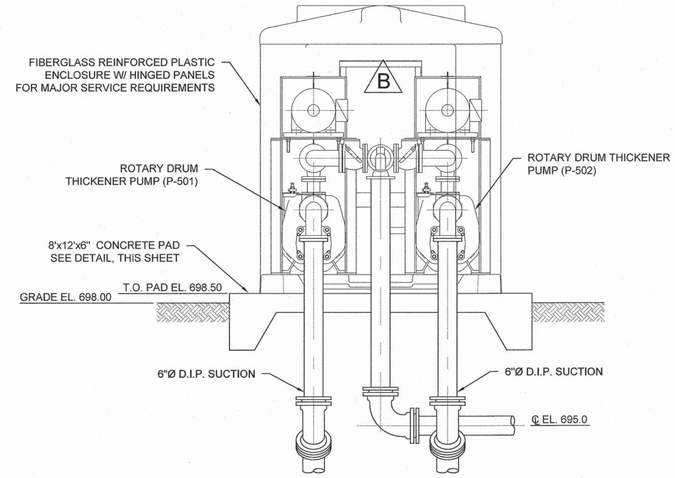

B G.30 SECTION
SCALE: 1/2"=1'-0"

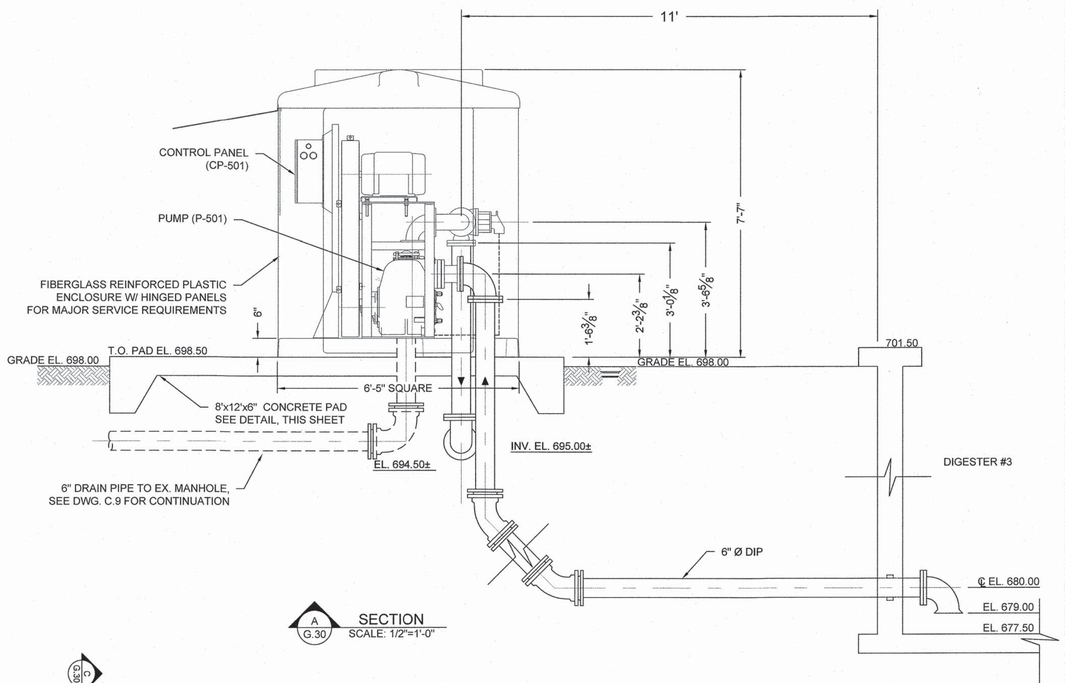

A G.30 SECTION
SCALE: 1/2"=1'-0"

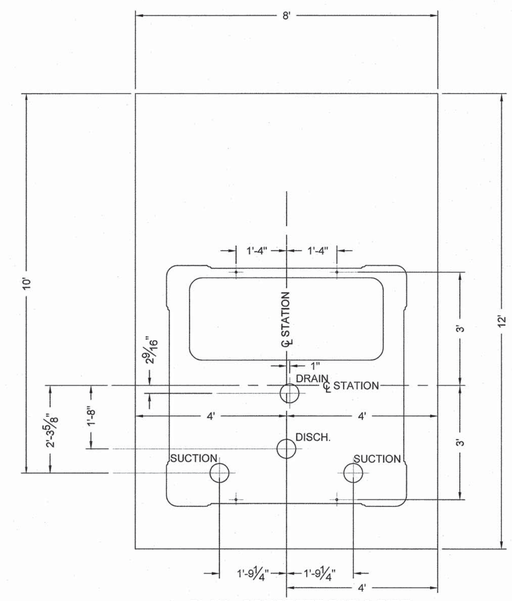

PLAN - CONCRETE PAD & PIPE PENETRATIONS
SCALE: 1/2"=1'-0"

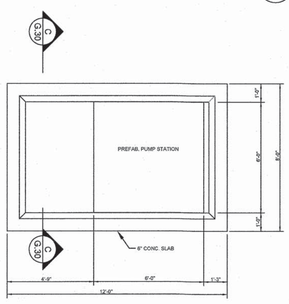

PUMP STATION CONCRETE PAD - PLAN
NOT TO SCALE

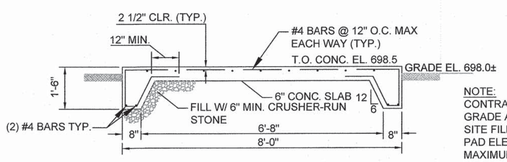

C G.30 SECTION
SCALE: NOT TO SCALE

NOTE:
CONTRACTOR TO ADJUST GRADE AROUND PAD W/ OFF SITE FILL MATERIAL TO ADJUST PAD ELEVATION AND PROVIDE MAXIMUM 4:1 SLOPE ON ALL SIDES AWAY FROM PAD.

3

FINAL DRAWINGS - - NOT RELEASED FOR CONSTRUCTION

WK DICKSON
community infrastructure consultants
616 COLONNADE DRIVE
CHARLOTTE, NC 28205
(t)704-334-5348
(f)704-334-0078
WWW.WKDICKSON.COM
NC LICENSE NO.F-0374

NORTH CAROLINA PROFESSIONAL SEAL 8802 ENGINEER CHARLES R. FRONESBERGER
PROFESSIONAL SEAL

REVISION RECORD

NO.	DATE	DESCRIPTION	BY
1.	10/9/18	ISSUE FOR OWNER/NCDEQ REVIEW	CRF
2.	5/21/19	CORRECTED PUMP AND VALVE NUMBERS	WBK
3.	9/17/19	SUCTION/DISCHARGE PIPE CONFIGURATION, SLAB DIMENSIONS.	RWH

PROJECT NAME: KILLIAN CREEK WWTP PHASE 3 UPGRADE

DRAWING TITLE: PROPOSED RDT PUMP STATION SECTIONS & DETAILS

PROJ. MGR.:	CRF
DESIGN BY:	CRF
DRAWN BY:	NS/CH
PROJ. DATE:	SEPT. 2018

DRAWING NUMBER:
G.30 OF 168
WKD PROJ. NO.:
20170294.00.CL

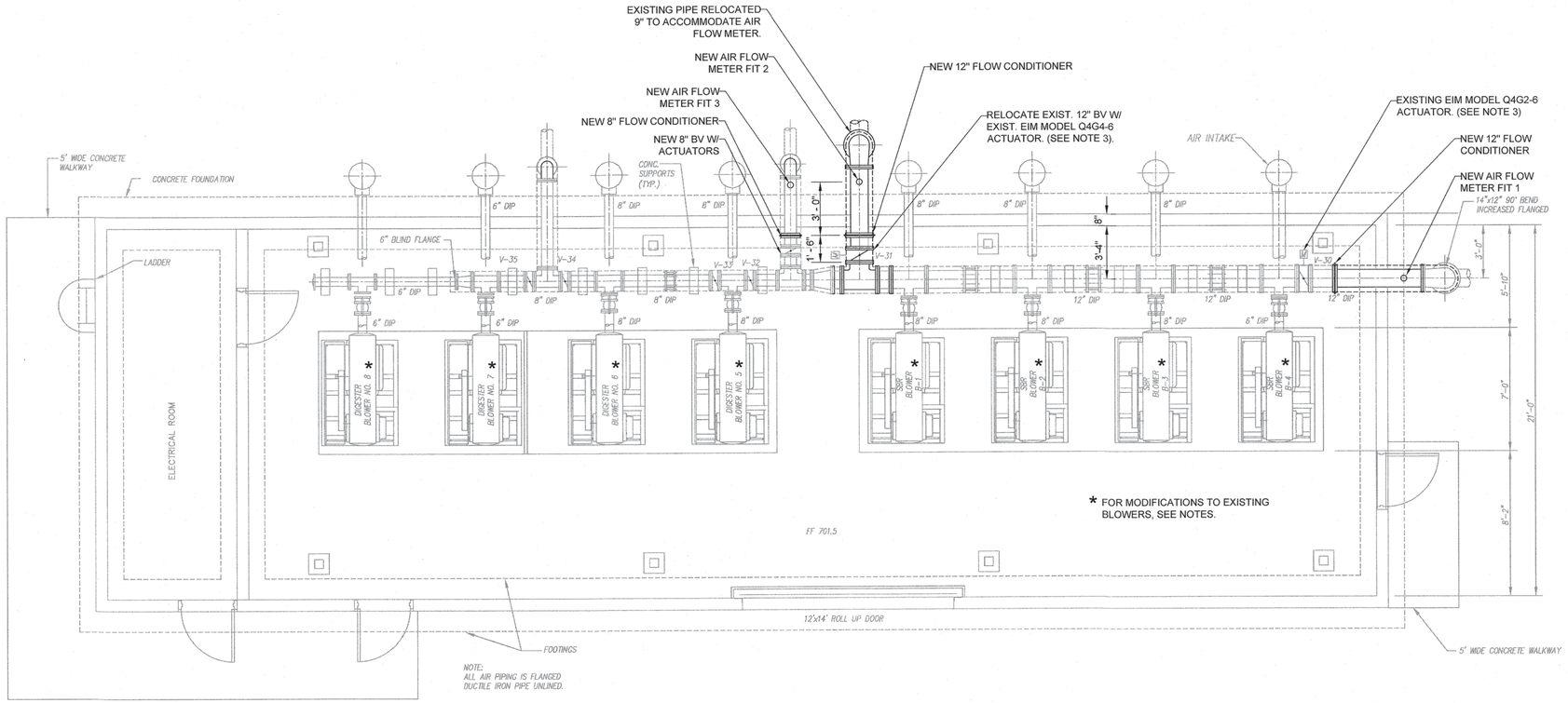

EXISTING BLOWER BUILDING #3 PLAN FOR SBR'S AND AEROBIC DIGESTERS

SCALE: 1/4" = 1'-0"

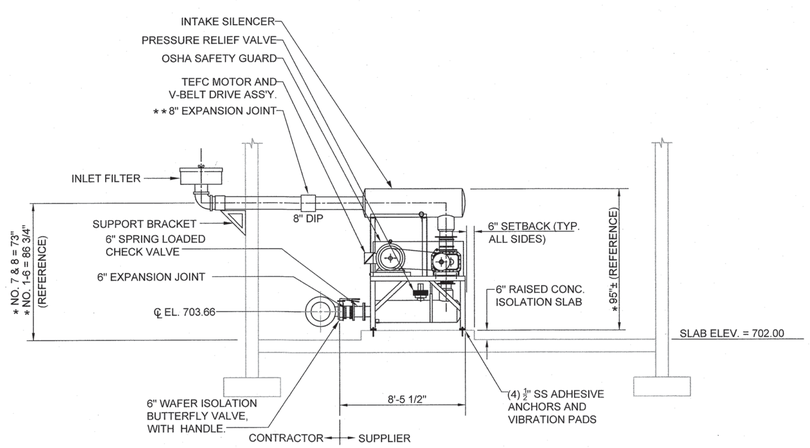

* TYPICAL BLOWER DETAIL FOR SBR & DIGESTER BLOWERS

SCALE: 1/4" = 1'-0"

* VERIFY WITH FINAL EQUIPMENT SELECTION

** BLOWER INTAKE PIPING IS 8-INCH FOR BLOWER NO. 1,2,3,4,5 AND 6 AND 6-INCH FOR BLOWER NO. 7 & 8

NOTES:

1. CONTRACTOR SHALL MODIFY THE EXISTING EIGHT (8) BLOWERS BY REPLACEMENT OF THE EXISTING PULLEY SHEAVES AND VBELTS TO INCREASE THE BLOWER SPEED AND OUTPUT SCFM CAPACITY IN ACCORDANCE WITH RECOGNIZE SIZING PRACTICES UTILIZING MANUFACTURER RECOMMENDED EQUIPMENT PER THE BELOW TABULATION OF BLOWER INFORMATION.

BLOWER NO.	BLOWER SYSTEM	BLOWER MODEL	EXISTING MOTOR SIZE (HP)	EXISTING MOTOR RPM	EXISTING BLOWER RPM	EXISTING BLOWER SCFM/PSIG	MODIFIED BLOWER RPM	MODIFIED BLOWER SCFM/PSIG
1	EXCELSIOR	HELIFLOW 616	100	1798	1669	825 / 11.1	2586	1300 / 11.1
2	EXCELSIOR	HELIFLOW 616	100	1798	1669	825 / 11.1	2586	1300 / 11.1
3	EXCELSIOR	HELIFLOW 616	100	1798	1669	825 / 11.1	2586	1300 / 11.1
4	UNITED	UBI 150	100	1780	2227	1100 / 11.1	2570	1300 / 11.1
5	EXCELSIOR	HELIFLOW 616	100	1800	1669	756 / 10.1	2570	1300 / 10.1
6	EXCELSIOR	HELIFLOW 616	100	1800	1669	756 / 10.1	2570	1300 / 10.1
7	EXCELSIOR	DUROFLOW 4512	50	1800	2452	544 / 10.1	2800	640 / 10.1
8	UNITED	UBI 125	50	1770	1907	544 / 10.1	2160	640 / 10.1

2. ALL EXPOSED AIR PIPING IS TO BE UNLINED, FLANGED DIP W/ INSULATION AND VAPOR BARRIER JACKET
3. EXISTING TWO (2) EIM MODEL Q4G2-6 VALVE ACTUATORS ARE TO BE UPGRADED TO CONVERT OPEN/CLOSE OPERATION TO MODULATING ACTUATOR W/ A 4 - 20 MA INPUT FROM DOWNSTREAM FLOW METER TO MAINTAIN PRESET AIR FLOW.

NOTE:
ELEVATIONS FOR THE KILLIAN CREEK PHASE 3 UPGRADE ARE BASED ON THE NAVD88 DATUM.

ELEVATIONS UTILIZED IN 2009 AND 2015 PLANT CONSTRUCTION WERE BASED UPON NGVD29. ELEVATIONS OF EXISTING STRUCTURES AND PIPING HAVE BEEN ADJUSTED TO REFLECT THE NAVD88 DATUM.

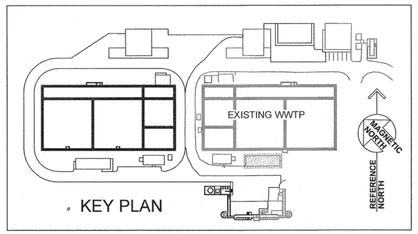

KEY PLAN

FINAL DRAWINGS - NOT RELEASED FOR CONSTRUCTION

WK DICKSON
community infrastructure consultants
616 COLONNADE DRIVE
CHARLOTTE, NC 28205
(t)704-334-5348
(f)704-334-0078
WWW.WKDICKSON.COM
NC LICENSE NO.F-0374

NORTH CAROLINA PROFESSIONAL SEAL 8882 ENGINEER CHARLES R. FRONEBERGER

PROFESSIONAL SEAL

REVISION RECORD

NO.	DATE	DESCRIPTION	BY

PROJECT NAME: KILLIAN CREEK WWTP PHASE 3 UPGRADE

DRAWING TITLE: EXISTING BLOWER BUILDING #3 MODIFICATIONS

PROJ. MGR.:	CRF
DESIGN BY:	CRF
DRAWN BY:	NS/CH
PROJ. DATE:	SEPT. 2018

DRAWING NUMBER:

G.31 OF 168

WKD PROJ. NO.:

20170294.00.CL

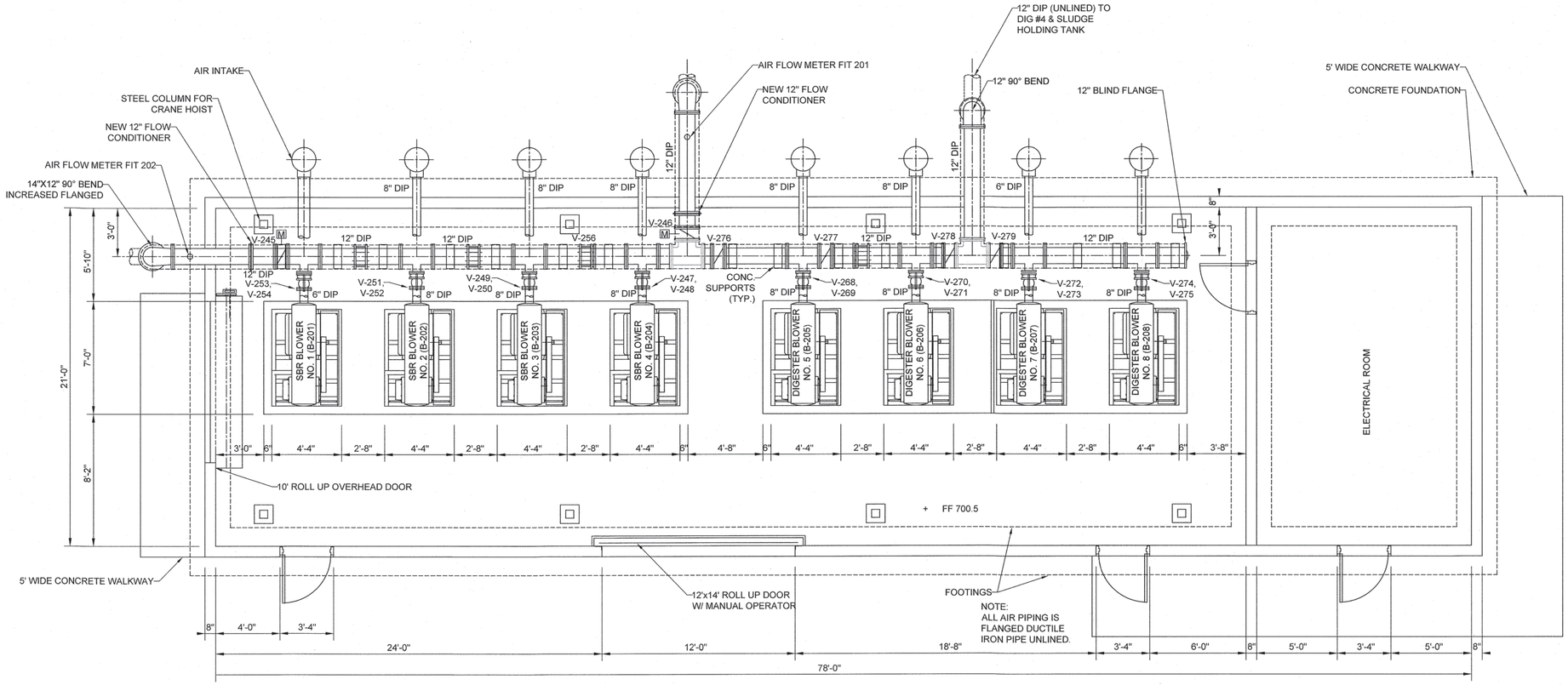

PROPOSED BLOWER BUILDING #3A PLAN
FOR SBR #3 & #4 AND AEROBIC DIGESTERS #3 & #4

SCALE: 1/4" = 1'-0"

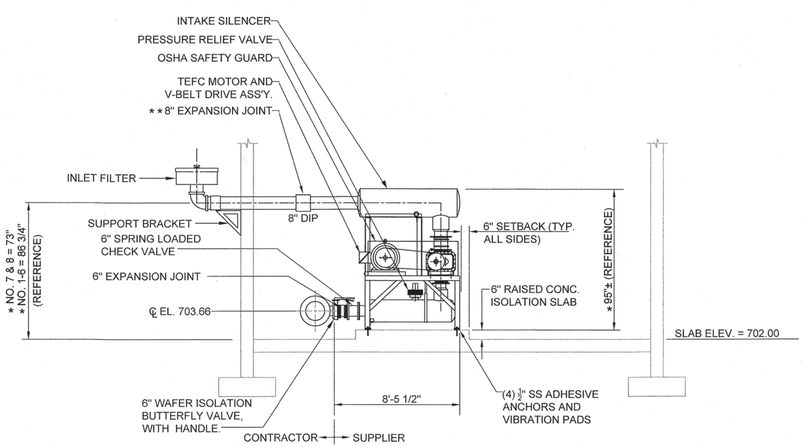

* TYPICAL BLOWER DETAIL FOR SBR & DIGESTER BLOWERS

SCALE: 1/4" = 1'-0"

* VERIFY WITH FINAL EQUIPMENT SELECTION

* * BLOWER INTAKE PIPING IS 8-INCH FOR BLOWER NO. 1,2,3,4,5 AND 6 AND 6-INCH FOR BLOWER NO. 7 & 8

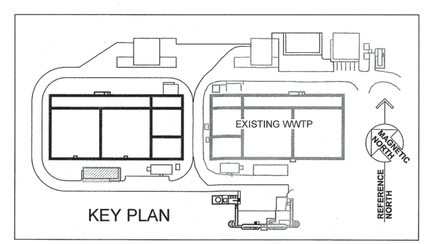

KEY PLAN

WK DICKSON
community infrastructure consultants
616 COLONNADE DRIVE
CHARLOTTE, NC 28205
(t)704-334-5348
(f)704-334-0078
WWW.WKDICKSON.COM
NC LICENSE NO.F-0374

NORTH CAROLINA PROFESSIONAL SEAL 18822 ENGINEER CHARLES F. FRONEBERGER

PROFESSIONAL SEAL

REVISION RECORD			
NO.	DATE	DESCRIPTION	BY

FINAL DRAWINGS - - NOT RELEASED FOR CONSTRUCTION

PROJECT NAME: KILLIAN CREEK WWTP PHASE 3 UPGRADE

DRAWING TITLE: PROPOSED BLOWER BUILDING #3A

PROJ. MGR.:	CRF
DESIGN BY:	CRF
DRAWN BY:	NS/CH
PROJ. DATE:	SEPT. 2018
DRAWING NUMBER:	

G.32 OF 168

WKD PROJ. NO.: 20170294.00.CL

COPYRIGHT © WK DICKSON & CO., INC. ALL RIGHTS RESERVED. REPRODUCTION OR USE OF THE CONTENTS OF THIS DOCUMENT, ADDITIONS OR MODIFICATIONS TO THE CONTENTS OF THIS DOCUMENT, IN WHOLE OR IN PART, WITHOUT WRITTEN CONSENT OF W.K. DICKSON & CO., INC., IS PROHIBITED. ONLY COPIES FROM THE ORIGINAL OF THIS DOCUMENT, MARKED WITH AN ORIGINAL SIGNATURE AND SEAL SHALL BE CONSIDERED TO BE VALID, TRUE COPIES.

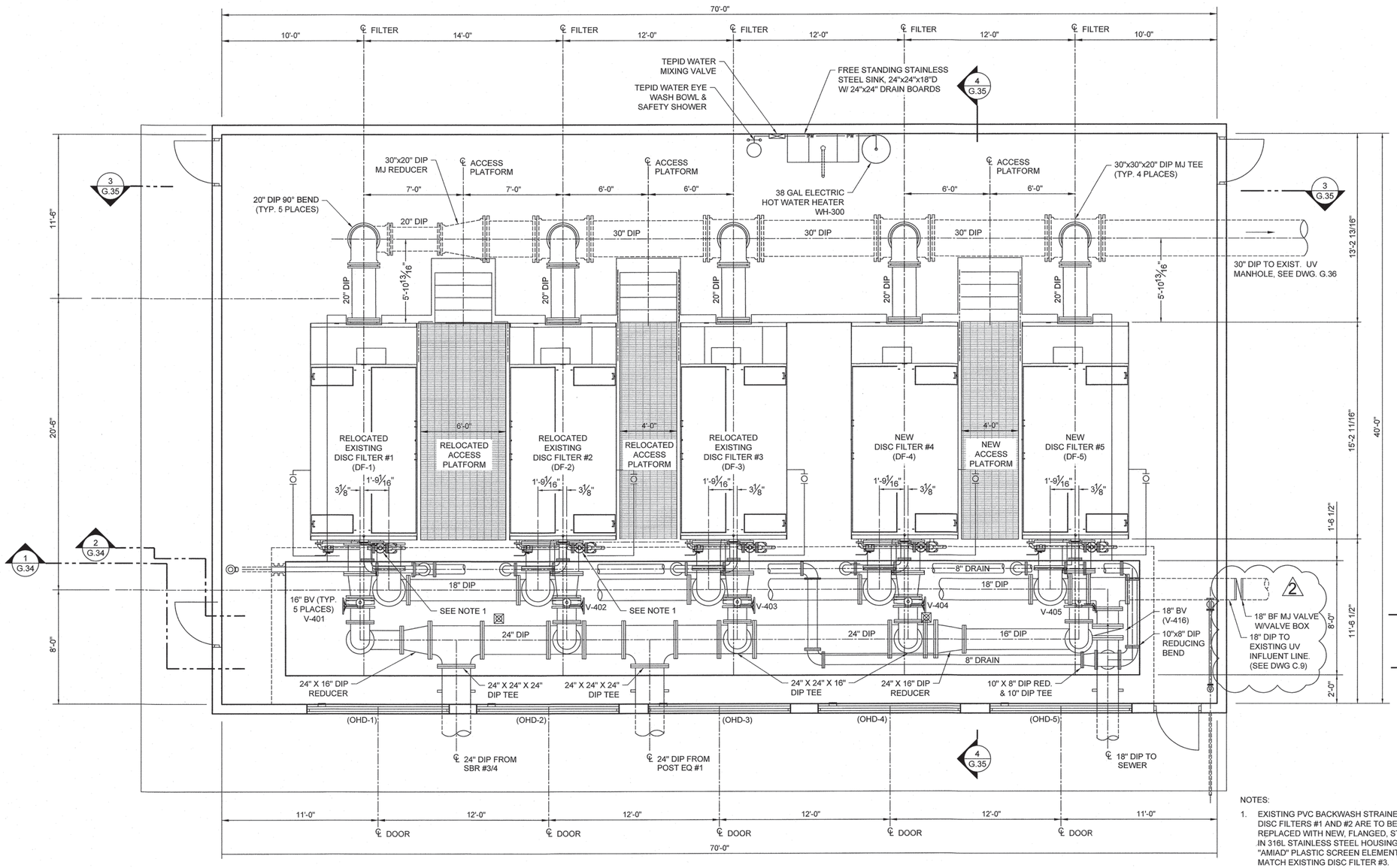

NOTES:

1. EXISTING PVC BACKWASH STRAINERS ON DISC FILTERS #1 AND #2 ARE TO BE REPLACED WITH NEW, FLANGED, STRAINERS IN 316L STAINLESS STEEL HOUSING AND "AMIAD" PLASTIC SCREEN ELEMENTS TO MATCH EXISTING DISC FILTER #3.

PLAN - EFFLUENT FILTER BUILDING #9

SCALE: 1/4" = 1'-0"

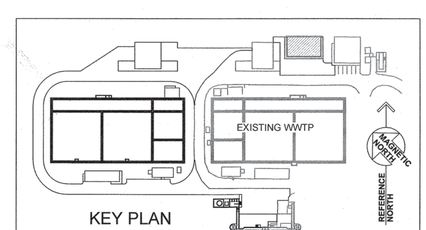

KEY PLAN

WK DICKSON
community infrastructure consultants
616 COLONNADE DRIVE
CHARLOTTE, NC 28205
(t)704-334-5348
(f)704-334-0078
WWW.WKDICKSON.COM
NC LICENSE NO.F-0374

NORTH CAROLINA PROFESSIONAL SEAL 8802 ENGINEER CHARLES R. FRONEBERGER

PROFESSIONAL SEAL

REVISION RECORD

NO.	DATE	DESCRIPTION	BY
1	10/9/18	ISSUE FOR OWNER/NCDEQ REVIEW	CRF
2	9/17/19	ADDITIONAL BFV	RWH

- NOT RELEASED FOR CONSTRUCTION -

FINAL DRAWINGS -

PROJECT NAME: KILLIAN CREEK WWTP PHASE 3 UPGRADE

DRAWING TITLE: EFFLUENT FILTER BUILDING PLAN

PROJ. MGR.:	CRF
DESIGN BY:	CRF
DRAWN BY:	NS/CH
PROJ. DATE:	SEPT. 2018

DRAWING NUMBER:

G.33 OF 168

WKD PROJ. NO.:

20170294.00.CL

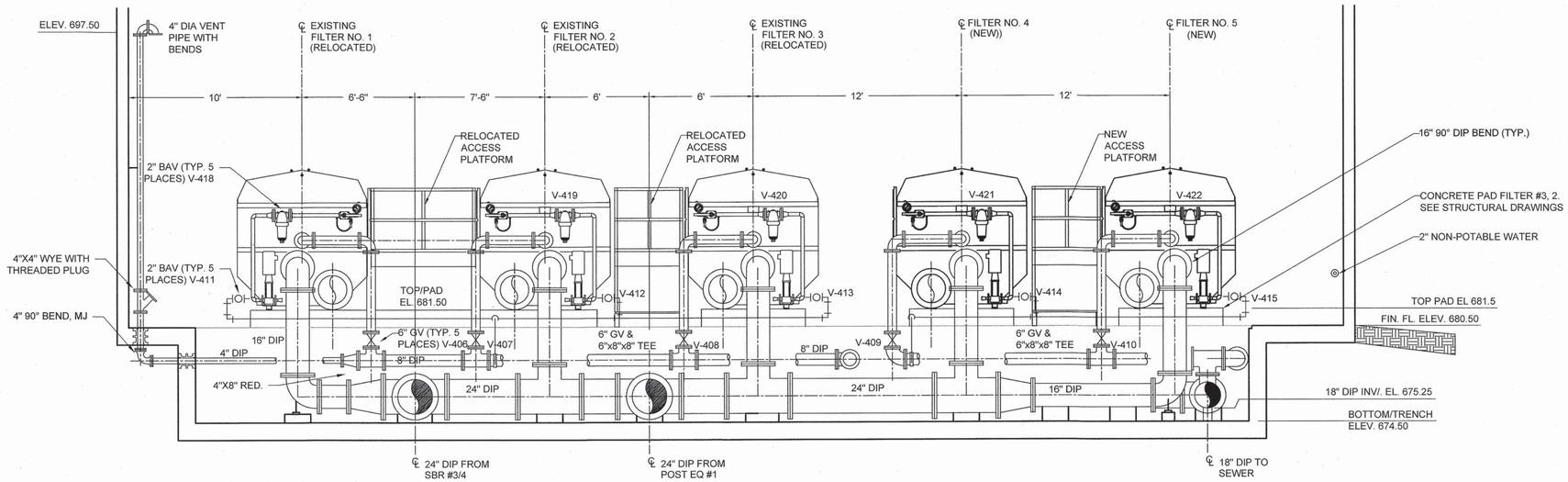

1 G.33 SECTION
SCALE: 1/4" = 1'

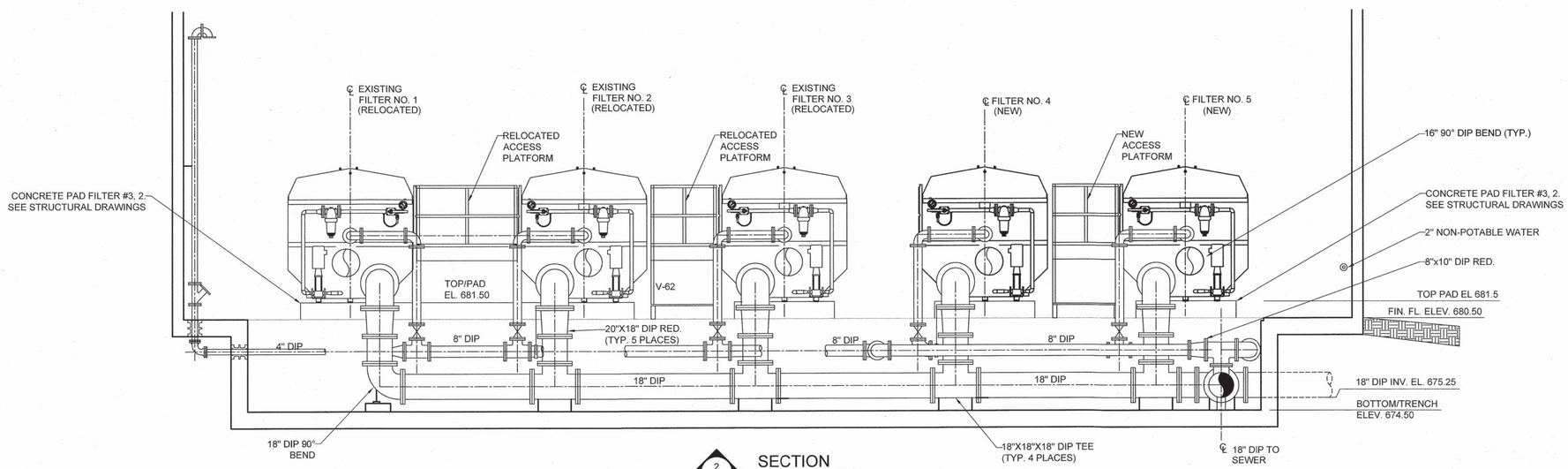

2 G.33 SECTION
SCALE: 1/4" = 1'

COPYRIGHT © W.K. DICKSON & CO., INC., ALL RIGHTS RESERVED. REPRODUCTION OF USE OF ANY CONTENT IN THIS DOCUMENT, INCLUDING BUT NOT LIMITED TO TEXT, GRAPHICS, DESIGNS, OR OTHER INFORMATION, WITHOUT THE PRIOR WRITTEN CONSENT OF W.K. DICKSON & CO., INC., IS PROHIBITED. ONLY PRINTS FROM THE ORIGINAL OF THIS DOCUMENT MARKED WITH AN ORIGINAL SIGNATURE AND SEAL SHALL BE CONSIDERED TO BE TRUE, TRUE COPIES.

WK DICKSON
community infrastructure consultants
616 COLONNADE DRIVE
CHARLOTTE, NC 28205
(t)704-334-5348
(f)704-334-0078
WWW.WKDICKSON.COM
NC LICENSE NO.F-0374

NORTH CAROLINA PROFESSIONAL SEAL 8802 ENGINEER CHARLES R. FROHNEBERGER

PROFESSIONAL SEAL

REVISION RECORD

NO.	DATE	DESCRIPTION	BY

- NOT RELEASED FOR CONSTRUCTION -

FINAL DRAWINGS -

PROJECT NAME: KILLIAN CREEK WWTP PHASE 3 UPGRADE

DRAWING TITLE: EFFLUENT FILTER BUILDING SECTIONS

PROJ. MGR.:	CRF
DESIGN BY:	CRF
DRAWN BY:	NS/CH
PROJ. DATE:	SEPT. 2018

DRAWING NUMBER:

G.34 OF 168

WKD PROJ. NO.: 20170294.00.CL

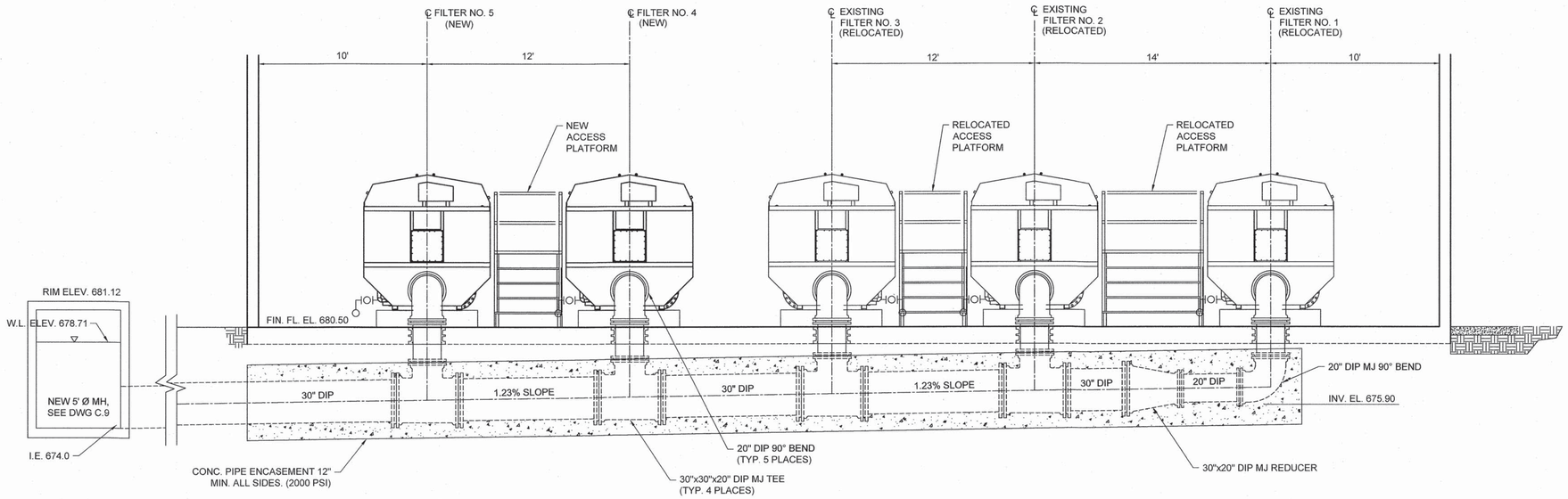

3 G.33 SECTION
SCALE: 1/4" = 1'-0"

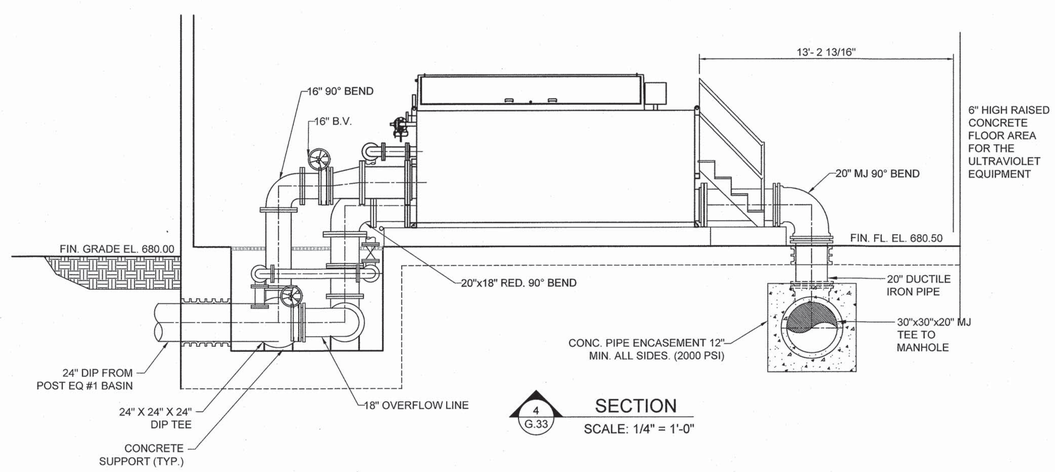

4 G.33 SECTION
SCALE: 1/4" = 1'-0"

COPYRIGHT © W.K. DICKSON & CO., INC. ALL RIGHTS RESERVED. REPRODUCTION OR USE OF THE CONTENTS OF THIS DOCUMENT, ADDITIONS OR DELETIONS TO THIS DOCUMENT, IN WHOLE OR IN PART, WITHOUT WRITTEN CONSENT OF W.K. DICKSON & CO., INC., IS PROHIBITED. ONLY COPIES FROM THE ORIGINAL OF THIS DOCUMENT, MARKED WITH AN ORIGINAL SIGNATURE AND SEAL SHALL BE CONSIDERED TO BE VALID, TRUE COPIES.

WK DICKSON
community infrastructure consultants
616 COLONNADE DRIVE
CHARLOTTE, NC 28205
(t)704-334-5348
(f)704-334-0078
WWW.WKDICKSON.COM
NC LICENSE NO.F-0374

NORTH CAROLINA PROFESSIONAL SEAL 8802 ENGINEER CHARLES R. FRONEBERGER
11-5-18
PROFESSIONAL SEAL

REVISION RECORD

NO.	DATE	DESCRIPTION	BY

PROJECT NAME: KILLIAN CREEK WWTP PHASE 3 UPGRADE

DRAWING TITLE: EFFLUENT FILTER BUILDING SECTIONS

PROJ. MGR.:	CRF
DESIGN BY:	CRF
DRAWN BY:	NS/CH
PROJ. DATE:	SEPT. 2018

DRAWING NUMBER:
G.35 OF 168
WKD PROJ. NO.:
20170294.00.CL

FINAL DRAWINGS - NOT RELEASED FOR CONSTRUCTION

COPYRIGHT © W.K. DICKSON & CO., INC., ALL RIGHTS RESERVED. REPRODUCTION OR USE OF THE CONTENTS OF THIS DOCUMENT, ADVERTISING OR PROMOTIONAL MATERIAL BY ANY MEANS IS PROHIBITED WITHOUT THE WRITTEN CONSENT OF W.K. DICKSON & CO., INC. COPIES MADE FROM THE ORIGINAL OF THIS DOCUMENT, MARKED WITH AN ORIGINAL SIGNATURE AND SEAL SHALL BE CONSIDERED TO BE VALID. TRUE COPIES.

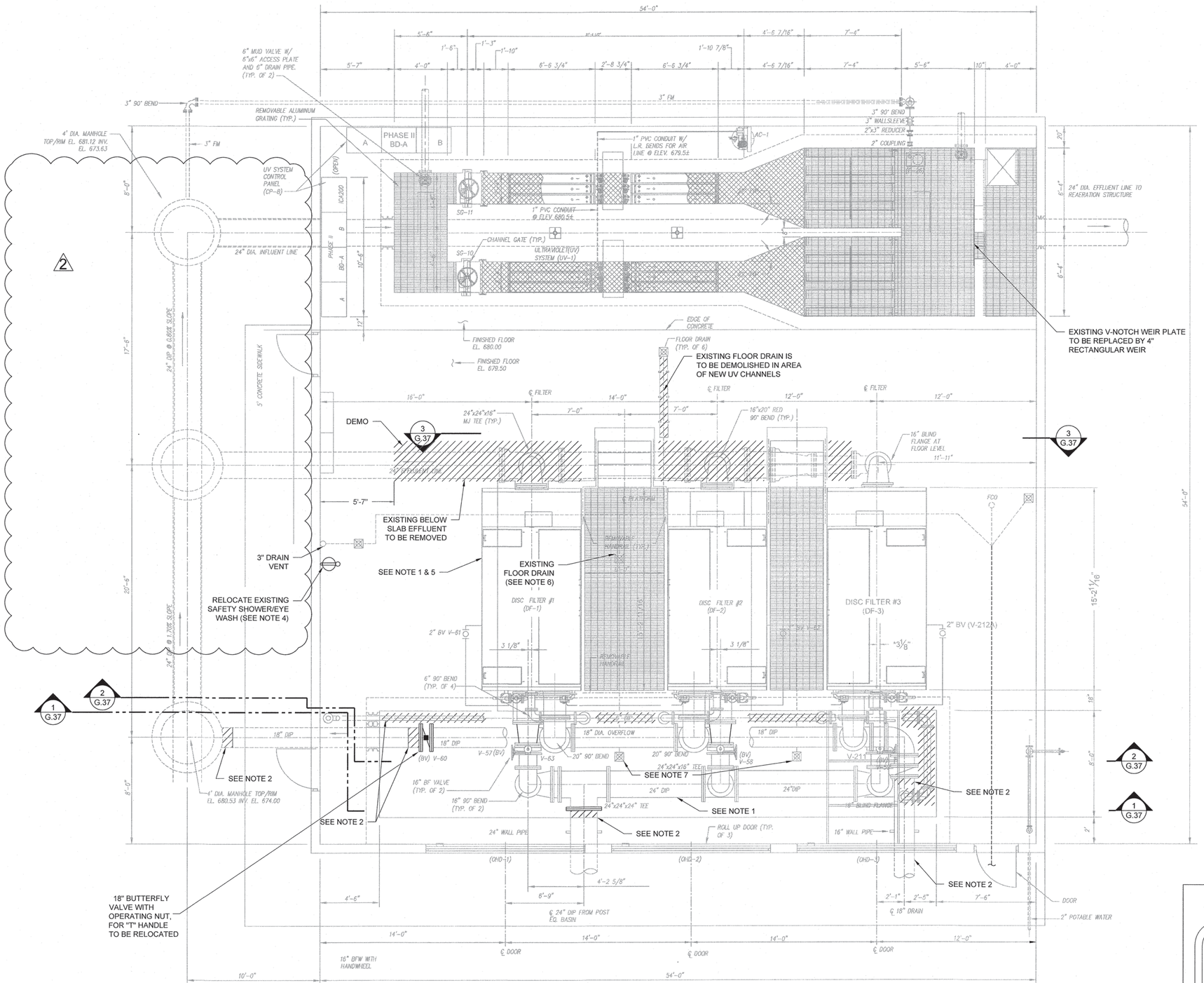

PLAN

SCALE: 1/4" = 1'-0"

NOTES:

1. THREE (3) EFFLUENT FILTERS INCLUDING ACCESS WALKWAYS, HANDRAILS, STEPS AND EXPOSED INFLUENT AND EFFLUENT PIPING AND VALVES ARE TO BE RELOCATED TO THE NEW EFFLUENT BUILDING AFTER INSTALLATION AND STARTUP OF THE TWO (2) NEW EFFLUENT FILTERS.
2. EXISTING PIPING NOT RELOCATED SHALL BE PLUGED AND SEALED.
3. EXISTING OPEN PIPING TRENCH AT THE INFLUENT TO THE EXISTING FILTERS IS TO BE FILLED WITH NO. 57 STONE AND CAPPED WITH 6-INCH LAYER OF CONCRETE TO MATCH EXISTING FLOOR ELEVATION.
4. EXISTING SAFETY SHOWER/EYE WASH ON WEST WALL IS TO BE RELOCATED TO NORTH WALL, SEE DWG G.37. CUT AND CAP EXISTING POTABLE WATER LINE AT HEADER PIPE.
5. UPON RELOCATION OF FILTERS, EXISTING EQUIPMENT PADS ARE TO BE DEMOLISHED TO FLOOR LEVEL AND FLOOR RESTORED TO MATCH SURROUNDING FLOOR ELEVATION.
6. EXISTING FLOOR DRAIN BETWEEN DISC FILTER #1 & #2 IS TO BE LOWERED TO MATCH NEW FLOOR ELEVATION UPON EQUIPMENT PAD DEMOLITION.
7. EXISTING FLOOR DRAINS IN PIPE TRENCH ARE TO BE EXTENDED TO NEW FLOOR LEVEL, SEE DWG G.37.

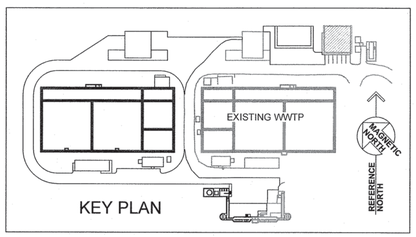

KEY PLAN

FINAL DRAWINGS - NOT RELEASED FOR CONSTRUCTION

WK DICKSON
community infrastructure consultants
616 COLONNADE DRIVE
CHARLOTTE, NC 28205
(t)704-334-5348
(f)704-334-0078
WWW.WKDICKSON.COM
NC LICENSE NO.F-0374

NORTH CAROLINA PROFESSIONAL SEAL 8802 ENGINEER CHARLES H. FRONEBERGER 11-23-18

PROFESSIONAL SEAL

REVISION RECORD

NO.	DATE	DESCRIPTION	BY
1	10/9/18	ISSUE FOR OWNER/NCDEQ REVIEW	CRF
2	9/17/19	REMOVED PROPOSED WORK	CRF

PROJECT NAME: KILLIAN CREEK WWTP PHASE 3 UPGRADE

DRAWING TITLE: EFFLUENT FILTER UV BUILDING DEMOLITION PLAN SHEET 1 OF 2

PROJ. MGR.:	CRF
DESIGN BY:	CRF
DRAWN BY:	NS/CH
PROJ. DATE:	SEPT. 2018

DRAWING NUMBER:

G.36 OF 168

WKD PROJ. NO.:

20170294.00.CL

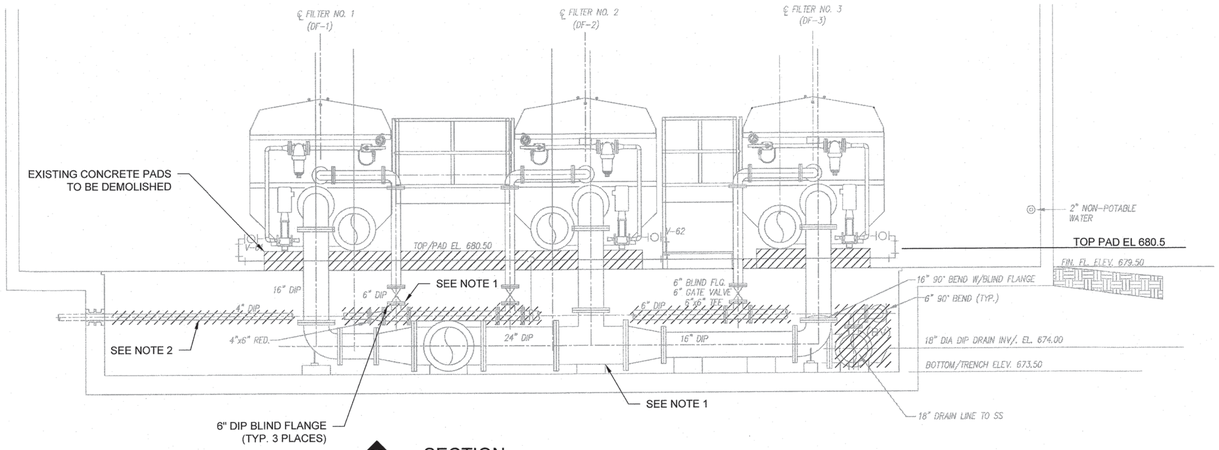

1 G.36 SECTION
SCALE: 1/4" = 1'

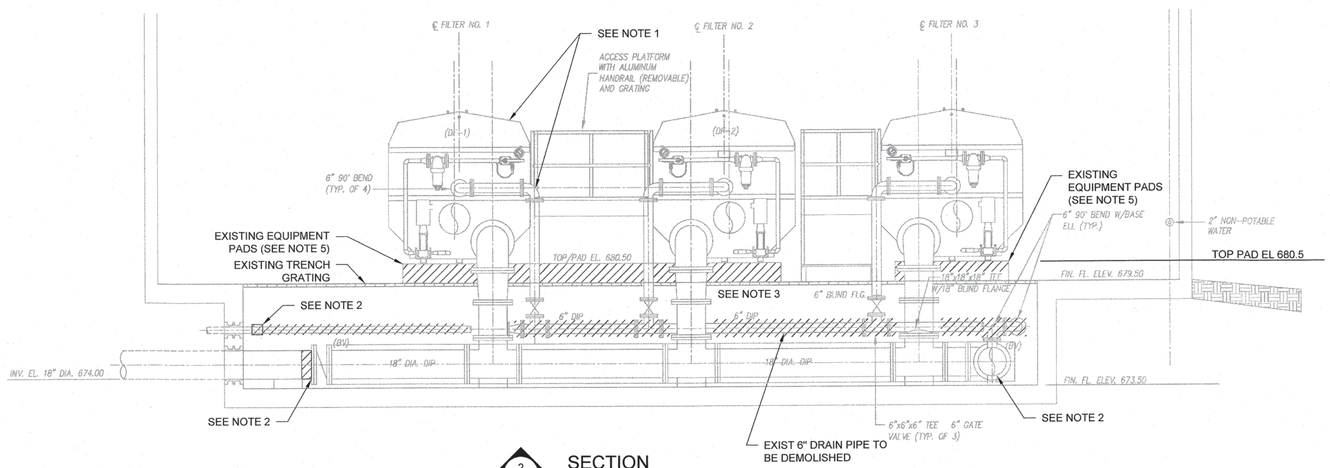

2 G.36 SECTION
SCALE: 1/4" = 1'

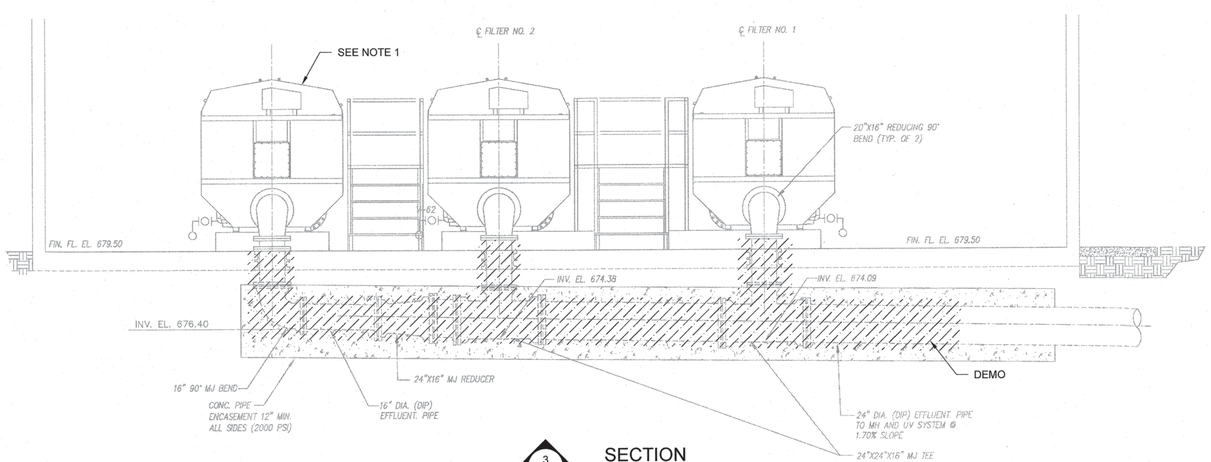

3 G.36 SECTION
SCALE: 1/4" = 1'-0"

NOTES:

1. THREE (3) EFFLUENT FILTERS INCLUDING ACCESS WALKWAYS, HANDRAILS, STEPS AND EXPOSED INFLUENT AND EFFLUENT PIPING AND VALVES ARE TO BE RELOCATED TO THE NEW EFFLUENT BUILDING AFTER INSTALLATION AND STARTUP OF THE TWO (2) NEW EFFLUENT FILTERS.
2. EXISTING PIPING NOT RELOCATED SHALL BE PLUGED AND SEALED.
3. EXISTING OPEN PIPING TRENCH AT THE INFLUENT TO THE EXISTING FILTERS IS TO BE FILLED WITH NO. 57 STONE AND CAPPED WITH 6-INCH LAYER OF CONCRETE TO MATCH EXISTING FLOOR ELEVATION.
4. EXISTING SAFETY SHOWER/EYE WASH ON WEST WALL IS TO BE RELOCATED TO NORTH WALL, SEE DWG G.37. CUT AND CAP EXISTING POTABLE WATER LINE AT HEADER PIPE.
5. UPON RELOCATION OF FILTERS, EXISTING EQUIPMENT PADS ARE TO BE DEMOLISHED TO FLOOR LEVEL AND FLOOR RESTORED TO MATCH SURROUNDING FLOOR ELEVATION.
6. EXISTING FLOOR DRAIN BETWEEN DISC FILTER #1 & #2 IS TO BE LOWERED TO MATCH NEW FLOOR ELEVATION UPON EQUIPMENT PAD DEMOLITION.
7. EXISTING FLOOR DRAINS IN PIPE TRENCH ARE TO BE EXTENDED TO NEW FLOOR LEVEL, SEE DWG G.37.

COPYRIGHT © W.K. DICKSON & CO., INC. ALL RIGHTS RESERVED. REPRODUCTION OR USE OF THE CONTENTS OF THIS DOCUMENT, ADDITIONS OR MODIFICATIONS THERETO, IN WHOLE OR IN PART, WITHOUT WRITTEN PERMISSION OF W.K. DICKSON & CO., INC. IS PROHIBITED. ONLY PRINTS THE ORIGINAL OF THIS DOCUMENT MARKED WITH AN ORIGINAL SIGNATURE AND SEAL SHALL BE CONSIDERED TO BE VALID. PRINTS COPIES.

WK DICKSON
community infrastructure consultants
616 COLONNADE DRIVE
CHARLOTTE, NC 28205
(t)704-334-5348
(f)704-334-0078
WWW.WKDICKSON.COM
NC LICENSE NO.F-0374

NORTH CAROLINA PROFESSIONAL ENGINEER SEAL 8802 CHARLES R. FROMBERGER
PROFESSIONAL SEAL

REVISION RECORD

NO.	DATE	DESCRIPTION	BY
2	12/2015	REMOVED REDUCER AND ADDED 20"x18" RED. 90° BEND	BF
1	7/2015	DELETED REUSE WATER SYSTEM	BF

FINAL DRAWINGS - NOT RELEASED FOR CONSTRUCTION

PROJECT NAME: KILLIAN CREEK WWTP PHASE 3 UPGRADE

DRAWING TITLE: EFFLUENT FILTER UV BUILDING DEMOLITION PLAN SHEET 2 OF 2

PROJ. MGR.:	CRF
DESIGN BY:	CRF
DRAWN BY:	NS/CH
PROJ. DATE:	SEPT. 2018

DRAWING NUMBER:
G.37 OF 168
WKD PROJ. NO.:
20170294.00.CL

COPYRIGHT © WK DICKSON & CO., INC. ALL RIGHTS RESERVED. REPRODUCTION OR USE OF THE CONTENTS OF THIS DOCUMENT, ALSO KNOWN AS THE INSTRUMENT OF SERVICE, WITHOUT THE WRITTEN PERMISSION OF WK DICKSON & CO., INC. IS PROHIBITED. COPIES OF THIS DOCUMENT, ALSO KNOWN AS THE INSTRUMENT OF SERVICE, MADE BY ANY METHOD WITHOUT THE WRITTEN PERMISSION OF WK DICKSON & CO., INC. ARE NOT TO BE CONSIDERED TO BE VALID, TRUE COPIES FROM THE ORIGINAL OF THIS DOCUMENT, MARKED WITH AN ORIGINAL SIGNATURE AND SEAL SHALL BE CONSIDERED TO BE VALID, TRUE COPIES.

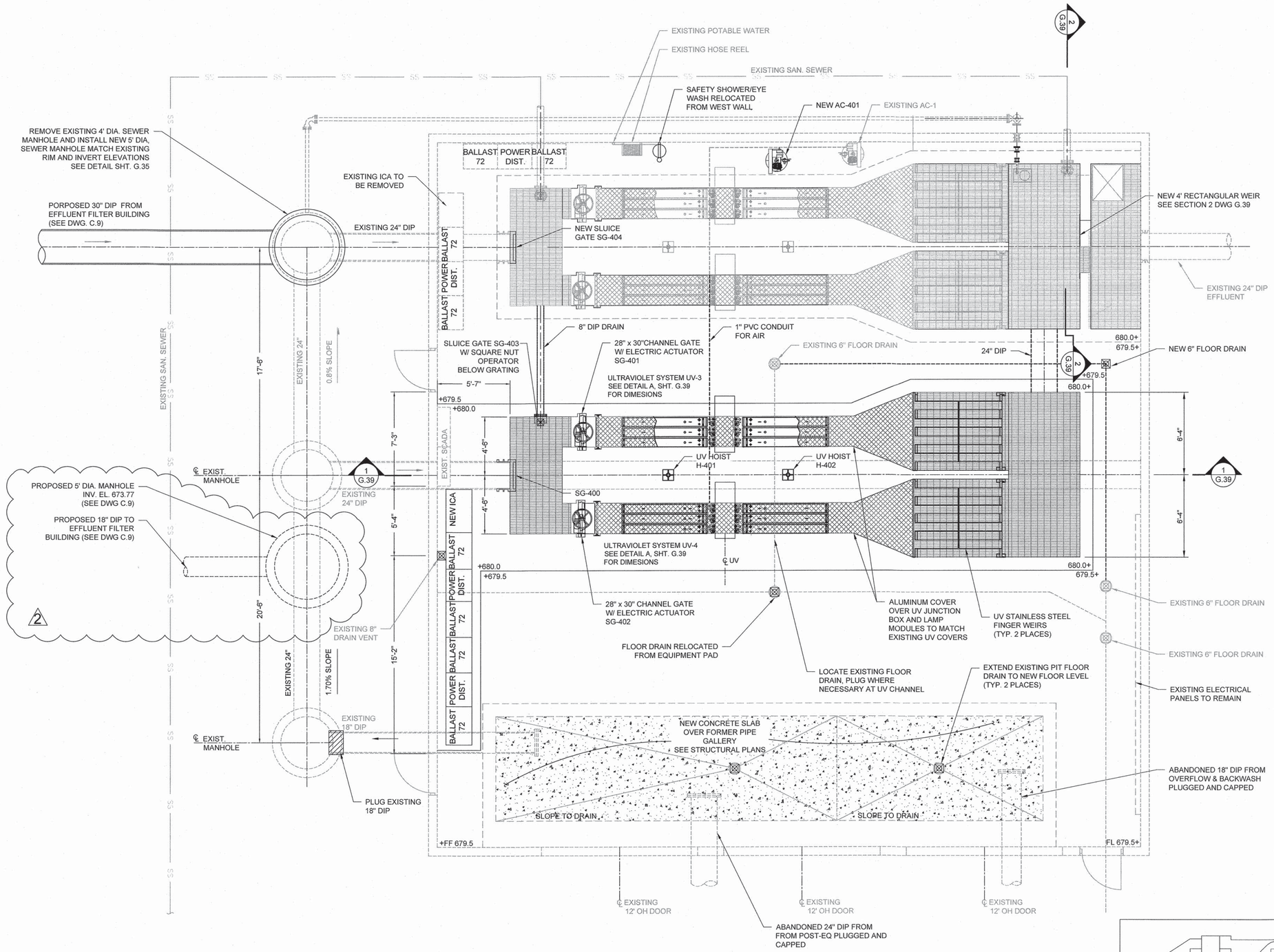

NOTE:

THE VERTICAL CURB AND A MINIMUM 6-INCH HORIZONTAL EDGE OF ALL CHANGES IN FLOOR ELEVATION SHALL BE PAINTED OSHA SAFETY YELLOW TO MATCH THE EXISTING FLOOR PAINT SYSTEM.

EXISTING UV BUILDING #6A

SCALE: 1/4" = 1'-0"

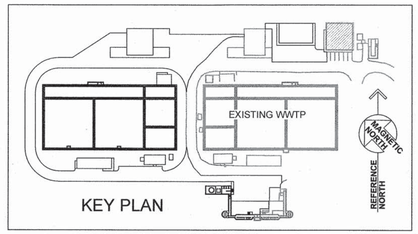

KEY PLAN

WK DICKSON
community infrastructure consultants
616 COLONNADE DRIVE
CHARLOTTE, NC 28205
(t)704-334-5348
(f)704-334-0078
WWW.WKDICKSON.COM
NC LICENSE NO.F-0374

NORTH CAROLINA PROFESSIONAL ENGINEER SEAL 8802 CHARLES R. FRONEBERGER 9/25/19

PROFESSIONAL SEAL

REVISION RECORD

NO.	DATE	DESCRIPTION	BY
1	10/9/18	ISSUE FOR OWNER/NCDEQ REVIEW	CRF
2	9/17/19	PROPOSED DIP AND MH	CRF

NOT RELEASED FOR CONSTRUCTION

FINAL DRAWINGS -

PROJECT NAME: KILLIAN CREEK WWTP PHASE 3 UPGRADE

DRAWING TITLE: EXISTING UV BUILDING PLAN

PROJ. MGR.:	CRF
DESIGN BY:	CRF
DRAWN BY:	NS/CH
PROJ. DATE:	SEPT. 2018

DRAWING NUMBER:

G.38 OF 168

WKD PROJ. NO.: 20170294.00.CL

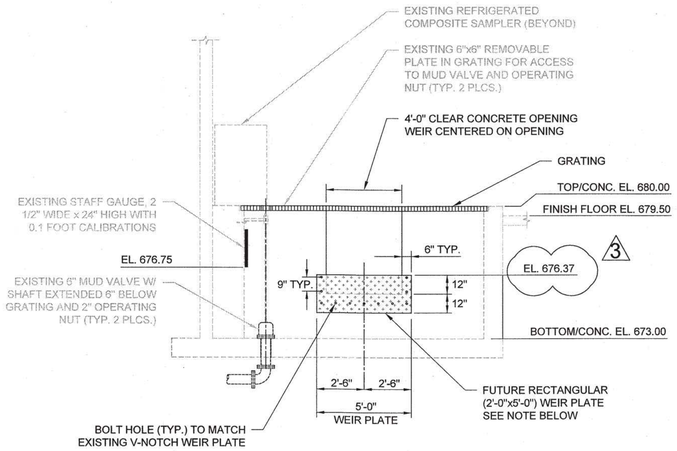

2 G.38 SECTION - FUTURE EFFLUENT WEIR

SCALE: 1/4" = 1'-0"

NOTE: THE EXISTING V-NOTCH WEIR IS TO REMAIN IN PLACE UNTIL FLOW JUSTIFIES CONVERSION TO THE RECTANGULAR WEIR. CONTRACTOR IS TO PROVIDE WEIR PLATE TO OWNER FOR FUTURE CONVERSION.

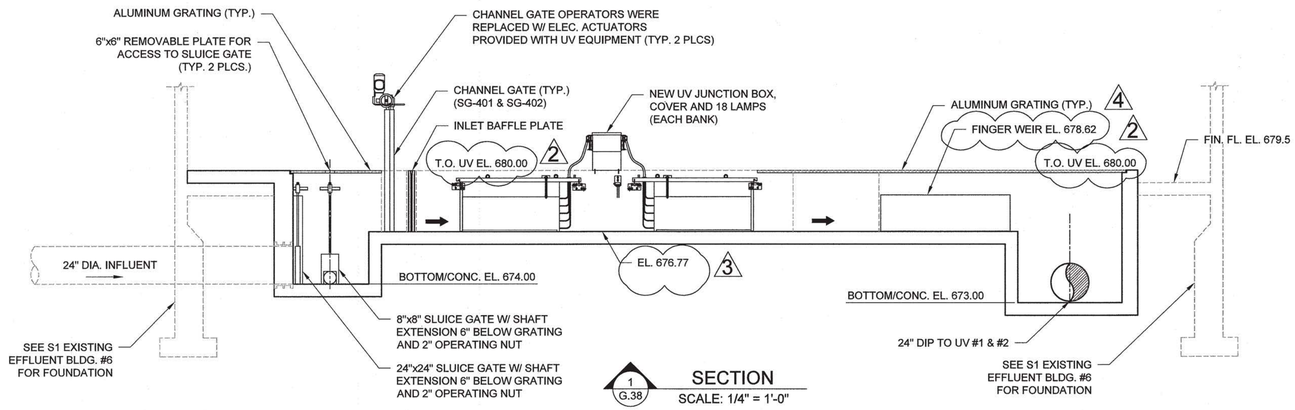

1 G.38 SECTION

SCALE: 1/4" = 1'-0"

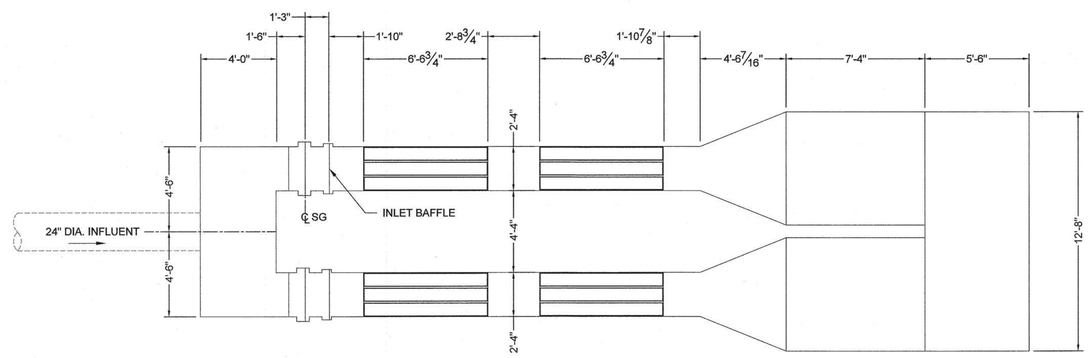

DETAIL A - UV CHANNEL LAYOUT PLAN

SCALE: 1/4" = 1'-0"

FINAL DRAWINGS - - NOT RELEASED FOR CONSTRUCTION

WK DICKSON
community infrastructure consultants
616 COLONNADE DRIVE
CHARLOTTE, NC 28205
(t)704-334-5348
(f)704-334-0078
WWW.WKDICKSON.COM
NC LICENSE NO.F-0374

NORTH CAROLINA PROFESSIONAL SEAL 8802 CHARLES F. FRONHEISER ENGINEER 12-17-19

PROFESSIONAL SEAL

REVISION RECORD

NO.	DATE	DESCRIPTION	BY
1.	10/9/18	ISSUE FOR OWNER/NCDEQ REVIEW	CRF
2.	9/17/19	TOP OF UV ELEVATION	CRF
3.	11/11/19	REVISIONS PER NCDEQ REVIEW	CRF
4.	12/17/19	REVISIONS PER NCDEQ REVIEW	RWH

PROJECT NAME: KILLIAN CREEK WWTP PHASE 3 UPGRADE

DRAWING TITLE: EXISTING UV BUILDING SECTIONS & DETAILS

PROJ. MGR.:	CRF
DESIGN BY:	CRF
DRAWN BY:	NS/CH
PROJ. DATE:	SEPT. 2018

DRAWING NUMBER:

G.39 OF 168

WKD PROJ. NO.:

20170294.00.CL

COPYRIGHT © W.K. DICKSON & CO., INC., ALL RIGHTS RESERVED. REPRODUCTION OR USE OF THE CONTENT OF THIS DOCUMENT, ADDITIONS OR ALTERATIONS TO THE CONTENT OF THIS DOCUMENT, IN WHOLE OR IN PART, WITHOUT WRITTEN CONSENT OF W.K. DICKSON & CO., INC., IS PROHIBITED. ONLY COPIES FROM THE ORIGINAL OF THIS DOCUMENT, MARKED WITH AN ORIGINAL SIGNATURE AND SEAL SHALL BE CONSIDERED TO BE VALID, TRUE COPIES.

FILE PATH: J:_Projects\ACOJ\20170294\00CL_Killian Creek WWTP Ph 3 Upgrade Council\CADD\Plan Sets\20170294_G_SHT_Effluent UV Building.dwg ; J:\Projects\ACOJ\20170294\00CL_Killian Creek WWTP Ph 3 Upgrade Council\CADD\Plan Sets\20170294_G_SHT_Effluent UV Building.dwg, CHUCH, 12/17/2019 11:10:07 AM

COPYRIGHT © W.K. DICKSON & CO., INC., ALL RIGHTS RESERVED. REPRODUCTION OR USE OF THE CONTENTS OF THE DOCUMENT, INCLUDING BUT NOT LIMITED TO DESIGN, TEXT, DRAWINGS, SPECIFICATIONS, ETC., WITHOUT THE WRITTEN CONSENT OF W.K. DICKSON & CO., INC., IS PROHIBITED. ONLY COPIES FROM THE ORIGINAL OF THIS DOCUMENT MARKED WITH AN ORIGINAL SIGNATURE AND SEAL SHALL BE CONSIDERED TO BE VALID, TRUE COPIES.

2

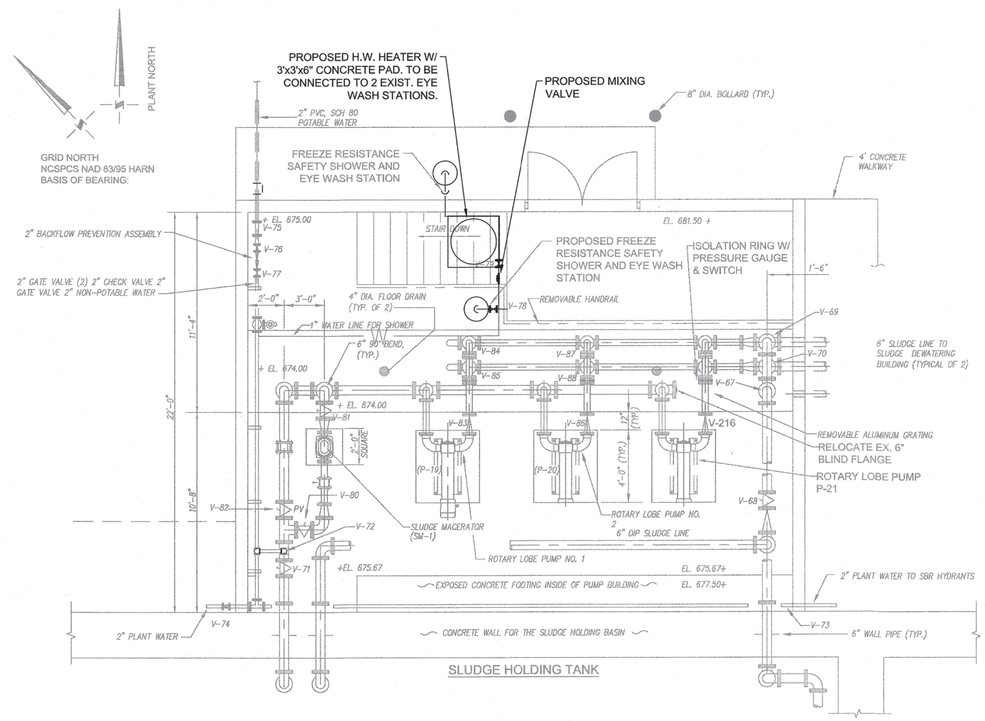

SLUDGE PUMP BUILDING #4 - PLAN VIEW

SCALE: 1/4" = 1'-0"

NOTE:

1. WATER LINE INSIDE OF BUILDING IS STAINLESS STEEL 304
2. ALL SLUDGE PIPING INSIDE BUILDING IS FLANGED DUCTILE IRON PIPE

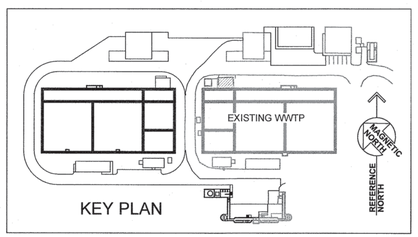

KEY PLAN

FINAL DRAWINGS - - NOT RELEASED FOR CONSTRUCTION

WK DICKSON
community infrastructure consultants
616 COLONNADE DRIVE
CHARLOTTE, NC 28205
(t)704-334-5348
(f)704-334-0078
WWW.WKDICKSON.COM
NC LICENSE NO.F-0374

NORTH CAROLINA PROFESSIONAL SEAL 8802 ENGINEER CHARLES R. FROHBERGER

PROFESSIONAL SEAL

REVISION RECORD

NO.	DATE	DESCRIPTION	BY
1	10/9/18	ISSUE FOR OWNER/NCDEQ REVIEW	CRF
2	9/17/19	PROPOSED EYEWASH	CRF

PROJECT NAME: KILLIAN CREEK WWTP PHASE 3 UPGRADE

DRAWING TITLE: EXISTING SLUDGE PUMP STATION BUILDING #4 PLAN

PROJ. MGR.:	CRF
DESIGN BY:	CRF
DRAWN BY:	NS/CH
PROJ. DATE:	SEPT. 2018

DRAWING NUMBER:

G.40 OF 168

WKD PROJ. NO.: 20170294.00.CL

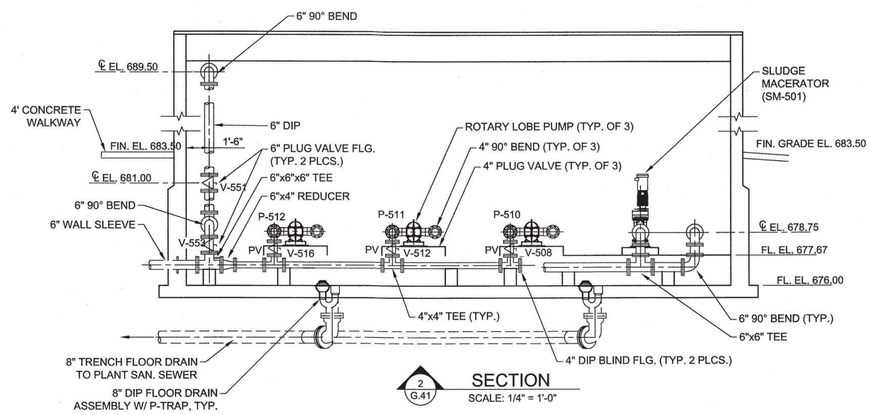

2 G.41 SECTION
SCALE: 1/4" = 1'-0"

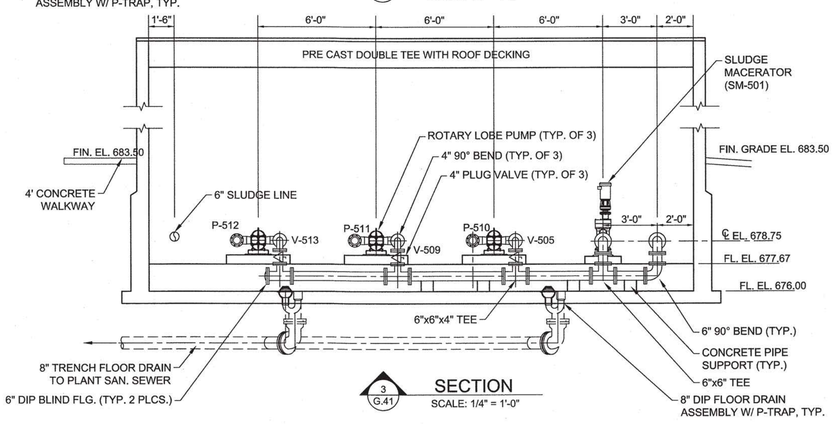

3 G.41 SECTION
SCALE: 1/4" = 1'-0"

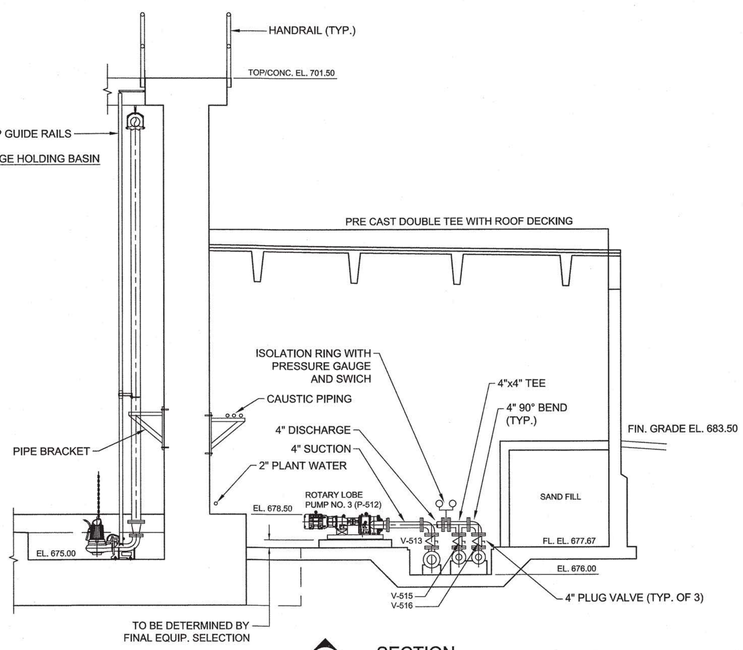

1 G.41 SECTION
SCALE: 1/4" = 1'-0"

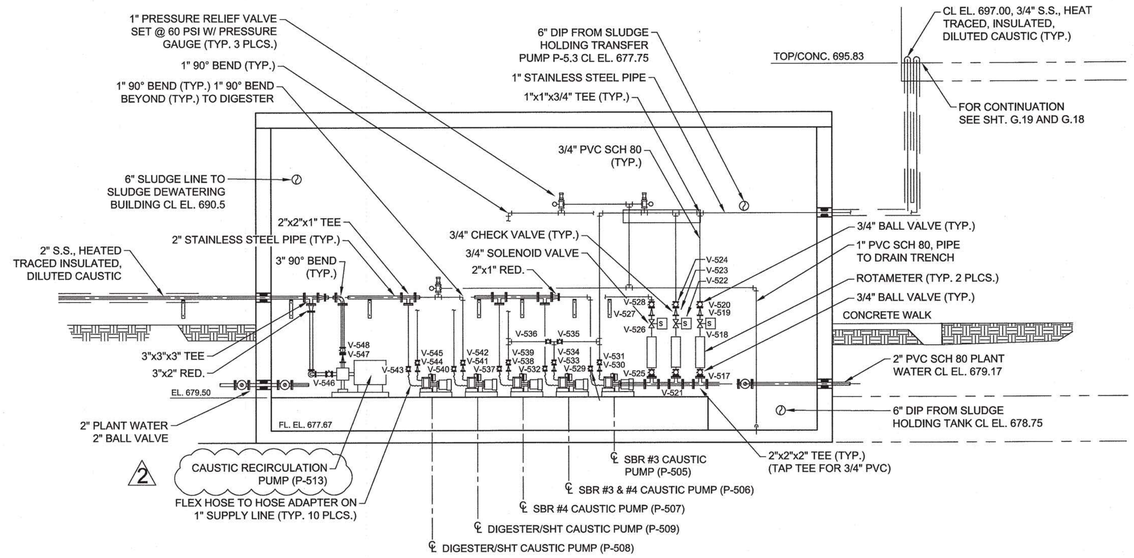

A G.41 SECTION
SCALE: 1/4" = 1'-0"

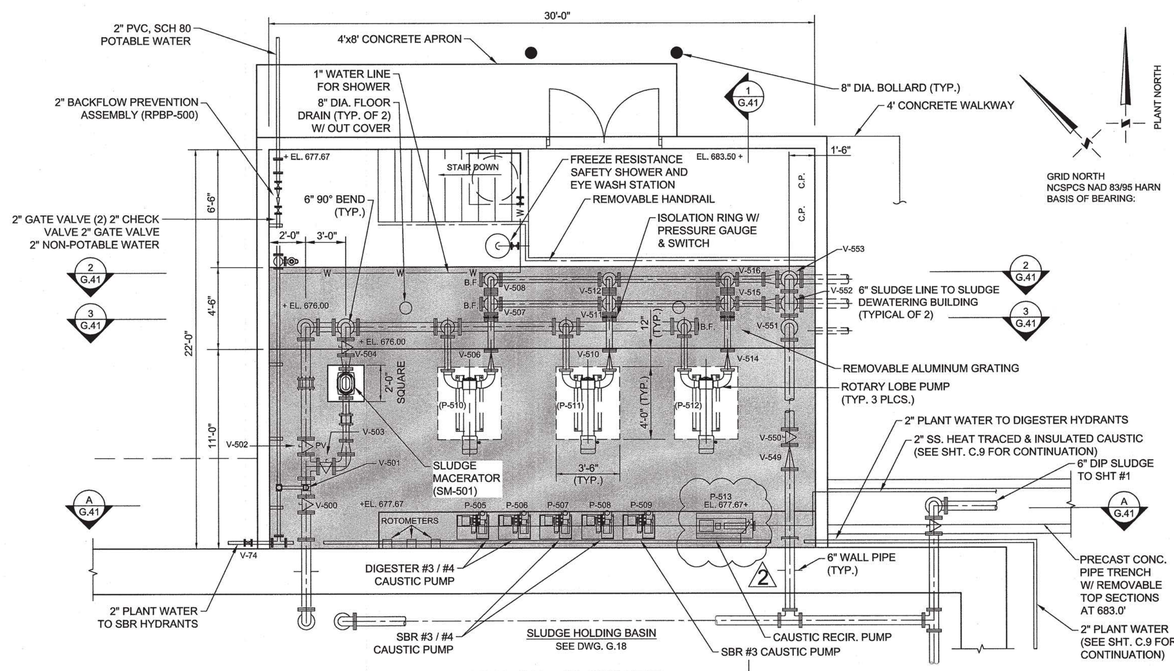

SLUDGE PUMP BUILDING #4A - PLAN VIEW

SCALE: 1/4" = 1'-0"

NOTES:
1. WATER LINE INSIDE OF BUILDING IS STAINLESS STEEL 304.
2. ALL SLUDGE PIPING INSIDE BUILDING IS FLANGED DUCTILE IRON PIPE.
3. PROVIDE CHEMICAL RESISTANT COATING BY TNEMEC, CABOLINE, KOP-COAT, CRYSTAL COAST INDUSTRIAL COATING, OR EQUAL TO REFERENCED COATING ON FLOOR AS FOLLOWS:
   - 3.1. PREPARATION - SCARIFY CONCRETE TO ICRI CSP3
   - 3.2. PRIMER COAT - TNEMEC SERIES 201 EPOXOLINE PRIMER OR EQUAL @ 6.0 TO 8.0 MIL D.F.T.
   - 3.3. FINISH COAT - TNENEC SERIES 282-GLAZE OR EQUAL @ 6.0 TO 8.0 MIL D.F.T. BROADCAST SILICA SAND INTO COATING AND BACK ROLL TO PROVIDE UNIFORM SLIP RESISTANT FINISH.
   - 3.4. ALTERNATE CRYSTAL COAST INDUSTRIAL PRIME COAT RHINO LINING PRIMER 101, 2 - 3 MILS & RHINO HICHEM 11 - 70, 100 MILS.

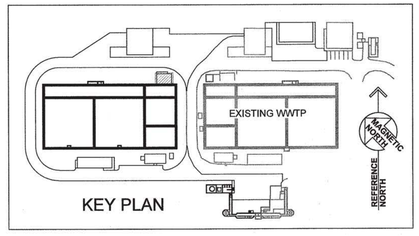

KEY PLAN

WK DICKSON
community infrastructure consultants
616 COLONNADE DRIVE
CHARLOTTE, NC 28205
(t)704-334-5348
(f)704-334-0078
WWW.WKDICKSON.COM
NC LICENSE NO.F-0374

NORTH CAROLINA PROFESSIONAL SEAL 8802 CHARLES F. FRONEBERGER ENGINEER 2-17-19

PROFESSIONAL SEAL

REVISION RECORD

NO.	DATE	DESCRIPTION	BY
1	10/9/18	ISSUE FOR OWNER/NCDEQ REVIEW	CRF
2	12/17/19	REVISIONS PER NCDEQ REVIEW	RWH

- NOT RELEASED FOR CONSTRUCTION -

FINAL DRAWINGS -

PROJECT NAME: KILLIAN CREEK WWTP PHASE 3 UPGRADE

DRAWING TITLE: SLUDGE PUMP STATION BUILDING #4A, PLAN AND SECTIONS

PROJ. MGR.:	CRF
DESIGN BY:	CRF
DRAWN BY:	NS/CH
PROJ. DATE:	SEPT. 2018

DRAWING NUMBER:

G.41 OF 168

WKD PROJ. NO.: 20170294.00.CL

COPYRIGHT © WK DICKSON & CO., INC. ALL RIGHTS RESERVED. REPRODUCTION OR USE OF THIS DOCUMENT, ADDITIONS OR MODIFICATIONS TO THIS DOCUMENT IN WHOLE OR IN PART WITHOUT WRITTEN CONSENT OF W.K. DICKSON & CO., INC., IS PROHIBITED. ONLY COPIES FROM THE ORIGINAL OF THIS DOCUMENT, MARKED WITH AN ORIGINAL SIGNATURE AND SEAL SHALL BE CONSIDERED TO BE VALID, TRUE COPIES.

FILE PATH: J:\Projects\NC\C20170294\NC_Killian Creek WWTP Ph 3 Upgrade Owner\CADD\Plan Sets\2017\004\G_G_001_Sludge Pump Building.dwg, Project=NC=C20170294NC, Killian Creek WWTP Ph 3 Upgrade Owner=CADD\Plan Sets\2017\004=G_G_001_Sludge Pump Building.dwg, CHECK=N, 12/17/2019 11:05:54 AM

COPYRIGHT © W.K. DICKSON & CO., INC., ALL RIGHTS RESERVED. REPRODUCTION OF USE OF THE CONTENTS OF THIS DOCUMENT, ADDITIONS OR ALTERATIONS TO THIS DOCUMENT WITHOUT THE WRITTEN PERMISSION OF W.K. DICKSON & CO., INC. IS PROHIBITED. ELECTRONIC COPIES OF THIS DOCUMENT SHALL BE CONSIDERED TO BE VALID, TRUE COPIES FROM THE ORIGINAL OF THIS DOCUMENT MARKED WITH AN ORIGINAL SIGNATURE AND SEAL SHALL BE CONSIDERED TO BE VALID, TRUE COPIES.

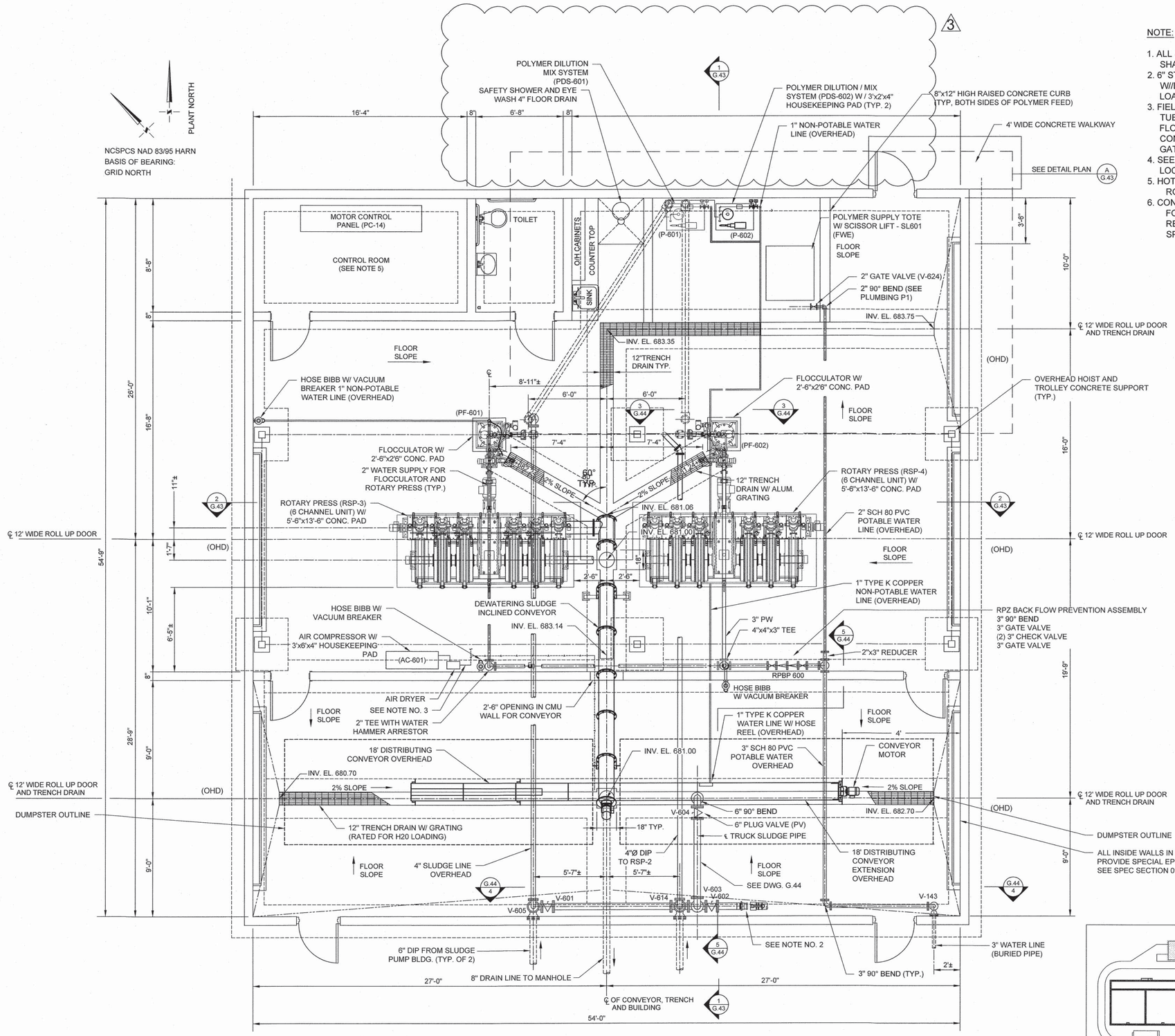

SLUDGE DEWATERING BUILDING #5A - PLAN VIEW

SCALE: 1/4" = 1'-0"

NOTE:

1. ALL SLUDGE PIPING INSIDE BUILDING SHALL BE FLANGED DUCTILE IRON PIPE.
2. 6" STAINLESS STEEL FLANGED COUPLING W//DUST CAP FOR OPTIONAL TRUCK LOADING.
3. FIELD ROUTE 3/8" DIAMETER NYLON AIR TUBING TO ROTARY PRESS, FLOCCULATOR SYSTEM, DISTRIBUTING CONVEYOR, PNEUMATIC VALVES. AND GATES.
4. SEE SHEET C.3 FOR PIPE BOLLARD LOCATIONS AROUND BUILDING.
5. HOT WATER HEATER TO BE LOCATED ON ROOF OF CONTROL ROOM.
6. CONTRACTOR SHALL BE RESPONSIBLE FOR ALL PIPE HANGERS/SUPPORTS AS REQUIRED FOR PIPING, PER SPECIFICATION 40 20 00.

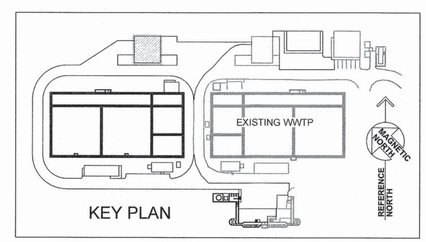

KEY PLAN

WK DICKSON
community infrastructure consultants
616 COLONNADE DRIVE
CHARLOTTE, NC 28205
(t)704-334-5348
(f)704-334-0078
WWW.WKDICKSON.COM
NC LICENSE NO.F-0374

NORTH CAROLINA PROFESSIONAL SEAL 8822 ENGINEER CHARLES R. FRONEBERGER

PROFESSIONAL SEAL

REVISION RECORD

NO.	DATE	DESCRIPTION	BY
1.	10/9/18	ISSUE FOR OWNER/NCDEQ REVIEW	CRF
2.	5/21/19	REVISED VALVES	WBK
3.	9/17/19	REUSE LINE REMOVED	CRF

- NOT RELEASED FOR CONSTRUCTION -

FINAL DRAWINGS -

PROJECT NAME: KILLIAN CREEK WWTP PHASE 3 UPGRADE

DRAWING TITLE: SLUDGE DEWATERING BUILDING #5A PLAN

PROJ. MGR.:	CRF
DESIGN BY:	CRF
DRAWN BY:	NS/CH
PROJ. DATE:	SEPT. 2018

DRAWING NUMBER:

G.42 OF 168

WKD PROJ. NO.: 20170294.00.CL

COPYRIGHT © WK DICKSON & CO., INC. ALL RIGHTS RESERVED. REPRODUCTION OR USE OF THE CONTENTS OF THIS DOCUMENTS, ADDITIONS OR MODIFICATIONS THERETO, IN WHOLE OR IN PART, WITHOUT WRITTEN PERMISSION OF WK DICKSON & CO., INC. IS PROHIBITED. ONLY PRINTS FROM THE ORIGINAL OF THIS DOCUMENT, MARKED WITH AN ORIGINAL SIGNATURE AND SEAL SHALL BE CONSIDERED TO BE VALID, TRUE COPIES.

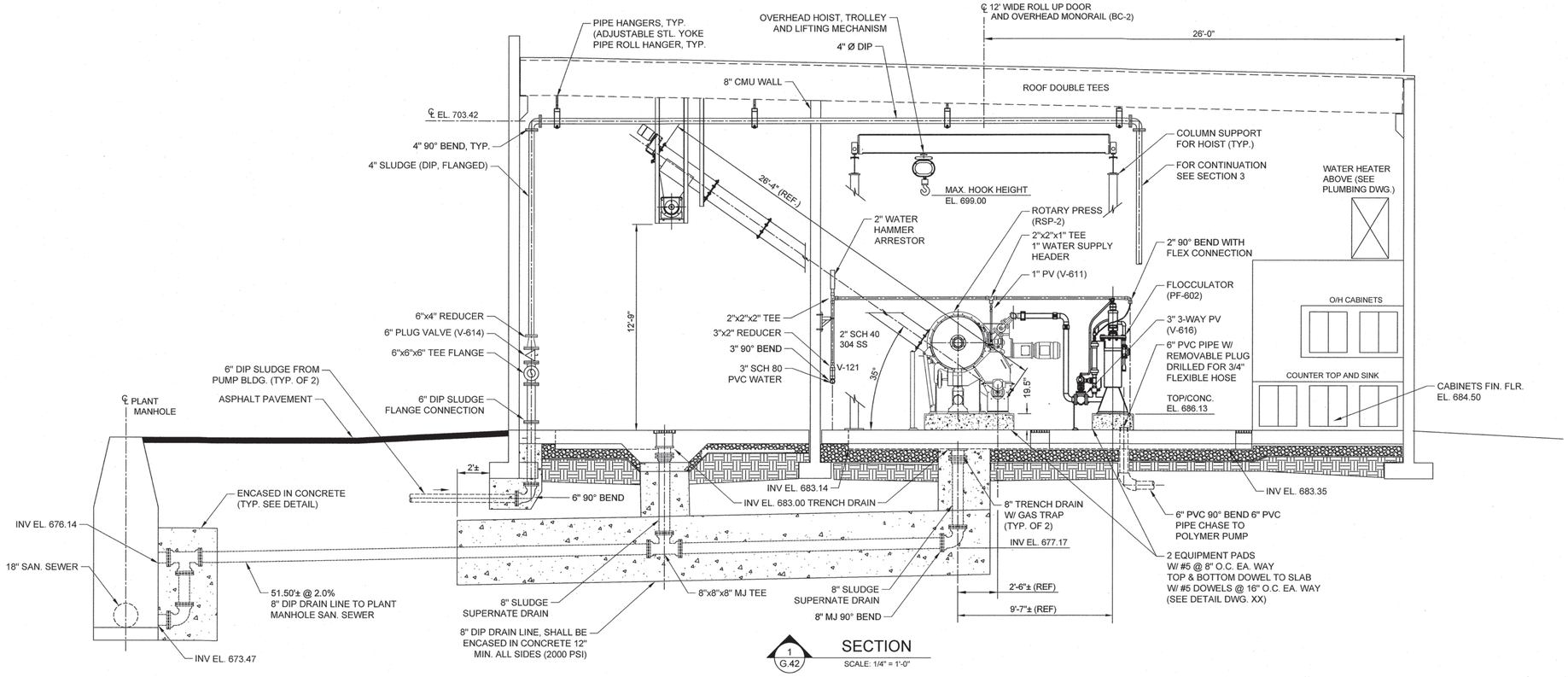

1 G.42 SECTION
SCALE: 1/4" = 1'-0"

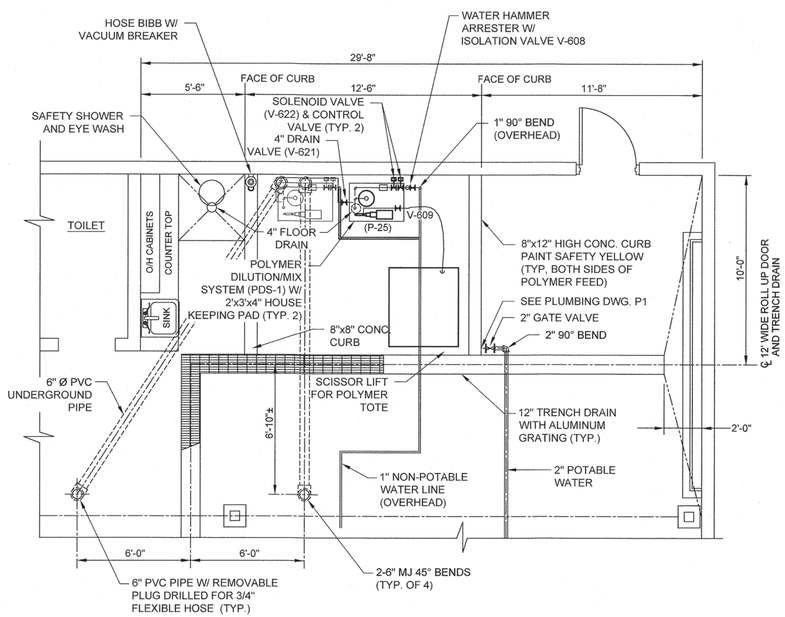

A G.42 DETAIL - PARTIAL PLAN
SCALE: 1/4" = 1'-0"

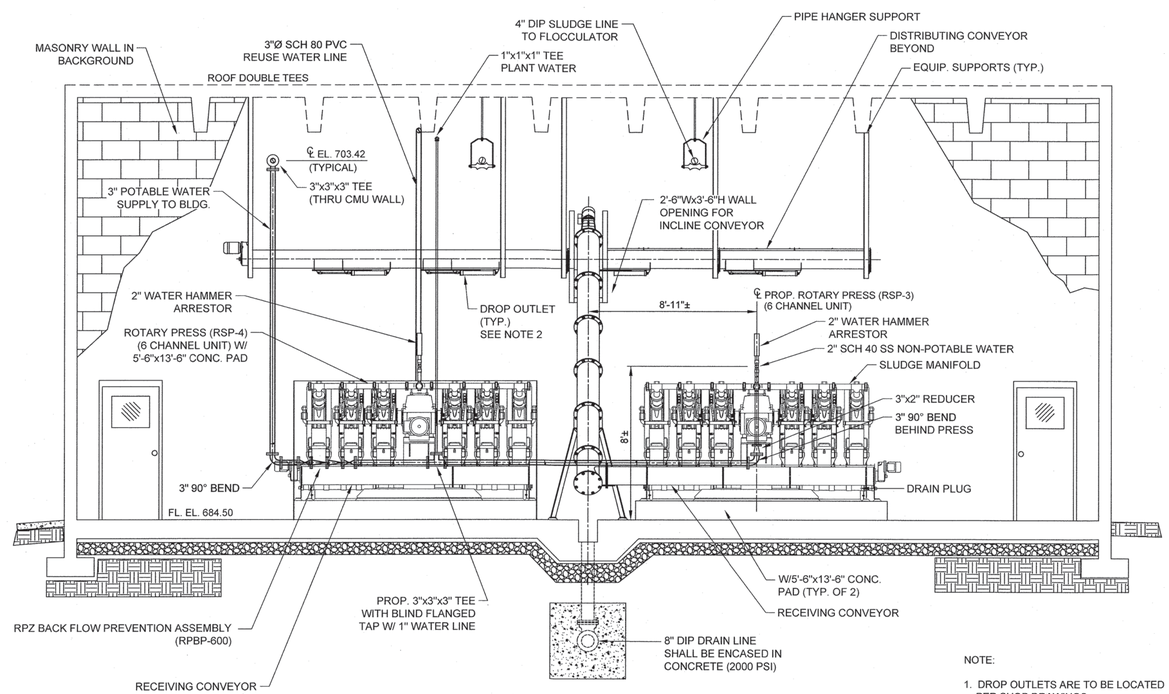

2 G.42 SECTION
SCALE: 1/4" = 1'-0"

NOTE:

1. DROP OUTLETS ARE TO BE LOCATED PER SHOP DRAWINGS.

WK DICKSON
community infrastructure consultants
616 COLONNADE DRIVE
CHARLOTTE, NC 28205
(t)704-334-5348
(f)704-334-0078
WWW.WKDICKSON.COM
NC LICENSE NO.F-0374

NORTH CAROLINA PROFESSIONAL SEAL 8803 ENGINEER CHARLES R. FRONEBERGER

PROFESSIONAL SEAL

REVISION RECORD

NO.	DATE	DESCRIPTION	BY

- NOT RELEASED FOR CONSTRUCTION -

FINAL DRAWINGS -

PROJECT NAME: KILLIAN CREEK WWTP PHASE 3 UPGRADE

DRAWING TITLE: SLUDGE DEWATERING BUILDING #5A SECTIONS

PROJ. MGR.:	CRF
DESIGN BY:	CRF
DRAWN BY:	NS/CH
PROJ. DATE:	SEPT. 2018

DRAWING NUMBER:

G.43 OF 168

WKD PROJ. NO.:

20170294.00.CL

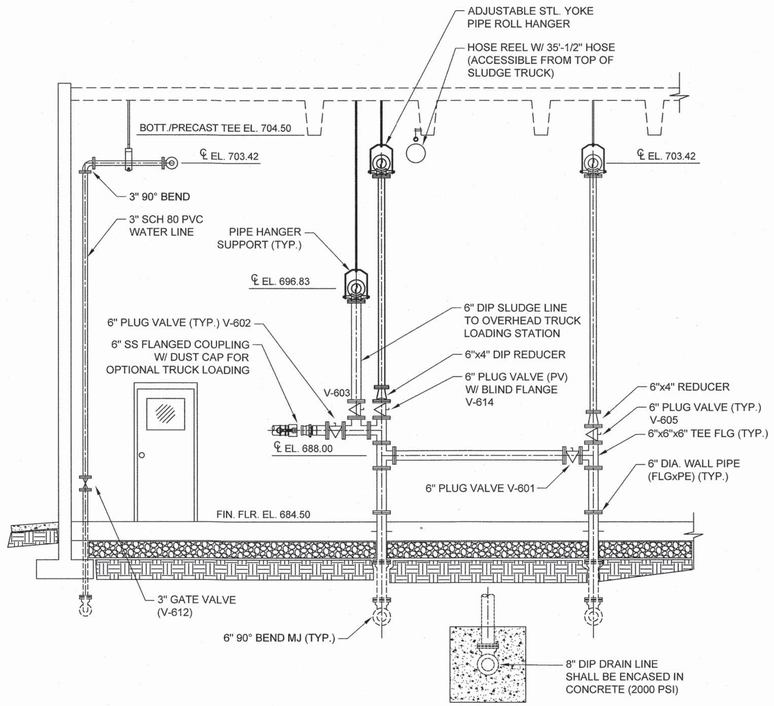

4 G.42 SECTION
SCALE: 1/4" = 1'-0"

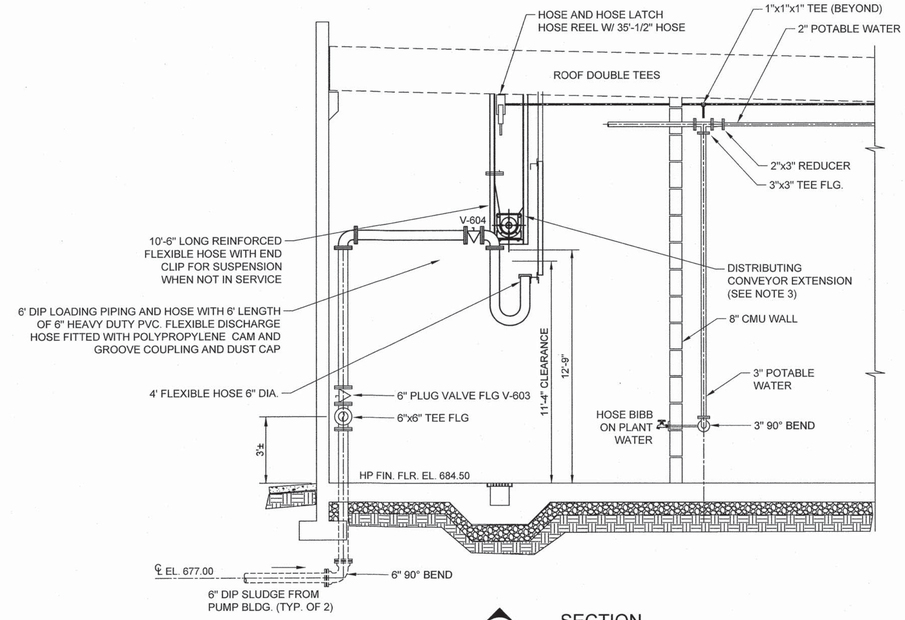

5 G.42 SECTION
SCALE: 1/4" = 1'-0"

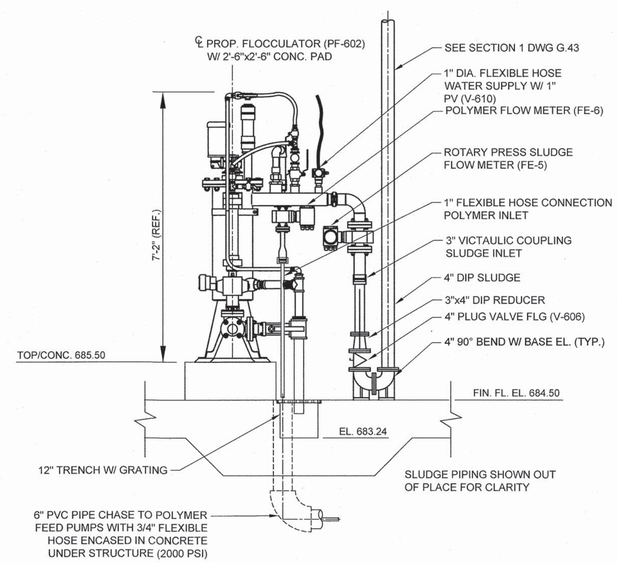

3 G.42 SECTION
SCALE: 1/2" = 1'-0"

WK DICKSON
community infrastructure consultants
616 COLONNADE DRIVE
CHARLOTTE, NC 28205
(t)704-334-5348
(f)704-334-0078
WWW.WKDICKSON.COM
NC LICENSE NO.F-0374

NORTH CAROLINA PROFESSIONAL SEAL 8802 ENGINEER CHARLES R. FRONEBERGER
PROFESSIONAL SEAL

REVISION RECORD

NO.	DATE	DESCRIPTION	BY

FINAL DRAWINGS - NOT RELEASED FOR CONSTRUCTION

PROJECT NAME: KILLIAN CREEK WWTP PHASE 3 UPGRADE

DRAWING TITLE: SLUDGE DEWATERING BUILDING #5A SECTIONS

PROJ. MGR.:	CRF
DESIGN BY:	CRF
DRAWN BY:	NS/CH
PROJ. DATE:	SEPT. 2018
DRAWING NUMBER:	

G.44 OF 168

WKD PROJ. NO.: 20170294.00.CL

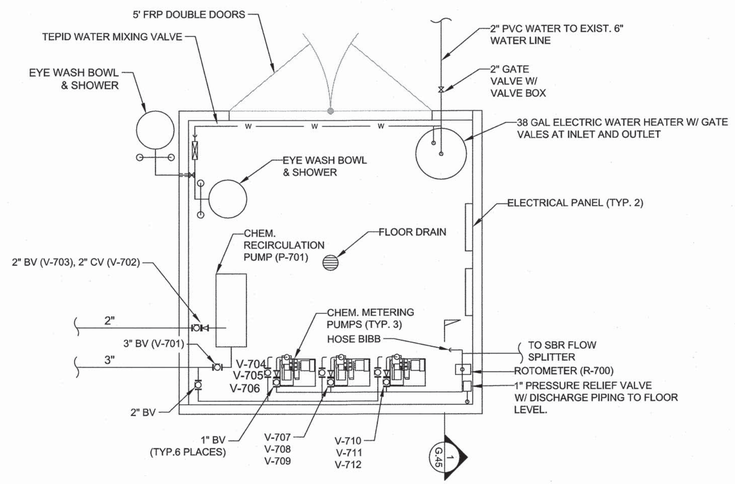

PLAN - CHEM. FEED BUILDING

SCALE: 1/2"=1'-0"

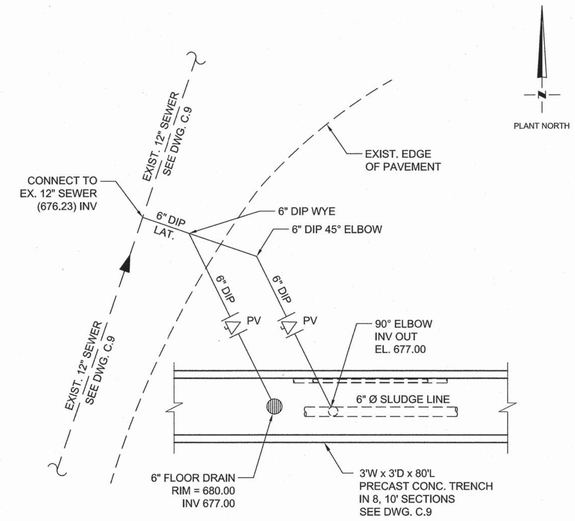

B / C.9 **6" DRAIN DETAIL**

SCALE: 1" = 4'

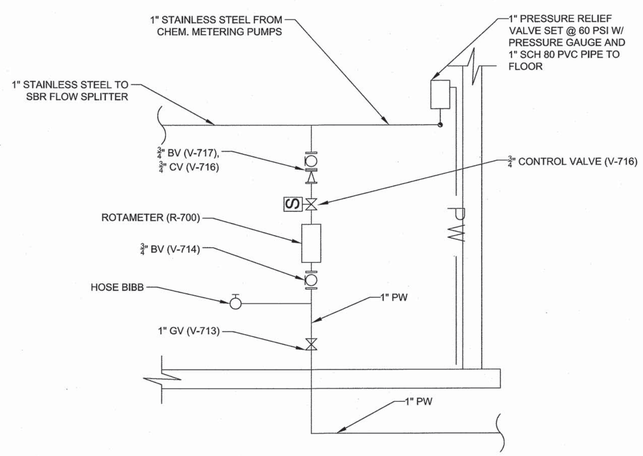

1 / G.45 **SECTION**

SCALE: NTS

WK DICKSON
community infrastructure consultants
616 COLONNADE DRIVE
CHARLOTTE, NC 28205
(t)704-334-5348
(f)704-334-0078
WWW.WKDICKSON.COM
NC LICENSE NO.F-0374

NORTH CAROLINA PROFESSIONAL SEAL 8802 ENGINEER CHARLES R. FRONEBERGER

PROFESSIONAL SEAL

REVISION RECORD

NO.	DATE	DESCRIPTION	BY

PROJECT NAME: KILLIAN CREEK WWTP PHASE 3 UPGRADE

DRAWING TITLE: GENERAL DETAILS

PROJ. MGR.:	CRF
DESIGN BY:	CRF
DRAWN BY:	NS/CH
PROJ. DATE:	SEPT. 2018

DRAWING NUMBER:

G.45 OF 168

WKD PROJ. NO.:

20170294.00.CL

FINAL DRAWINGS - NOT RELEASED FOR CONSTRUCTION

COPYRIGHT © WK DICKSON & CO., INC. ALL RIGHTS RESERVED. REPRODUCTION OR USE OF THE CONTENTS OF THIS DOCUMENT, ADDITIONS OR DELETIONS TO THIS DOCUMENT, IN WHOLE OR IN PART, WITHOUT WRITTEN CONSENT OF WK DICKSON & CO., INC., IS PROHIBITED. ONLY COPIES FROM THE ORIGINAL OF THIS DOCUMENT MARKED WITH AN ORIGINAL SIGNATURE AND SEAL SHALL BE CONSIDERED TO BE VALID, TRUE COPIES.

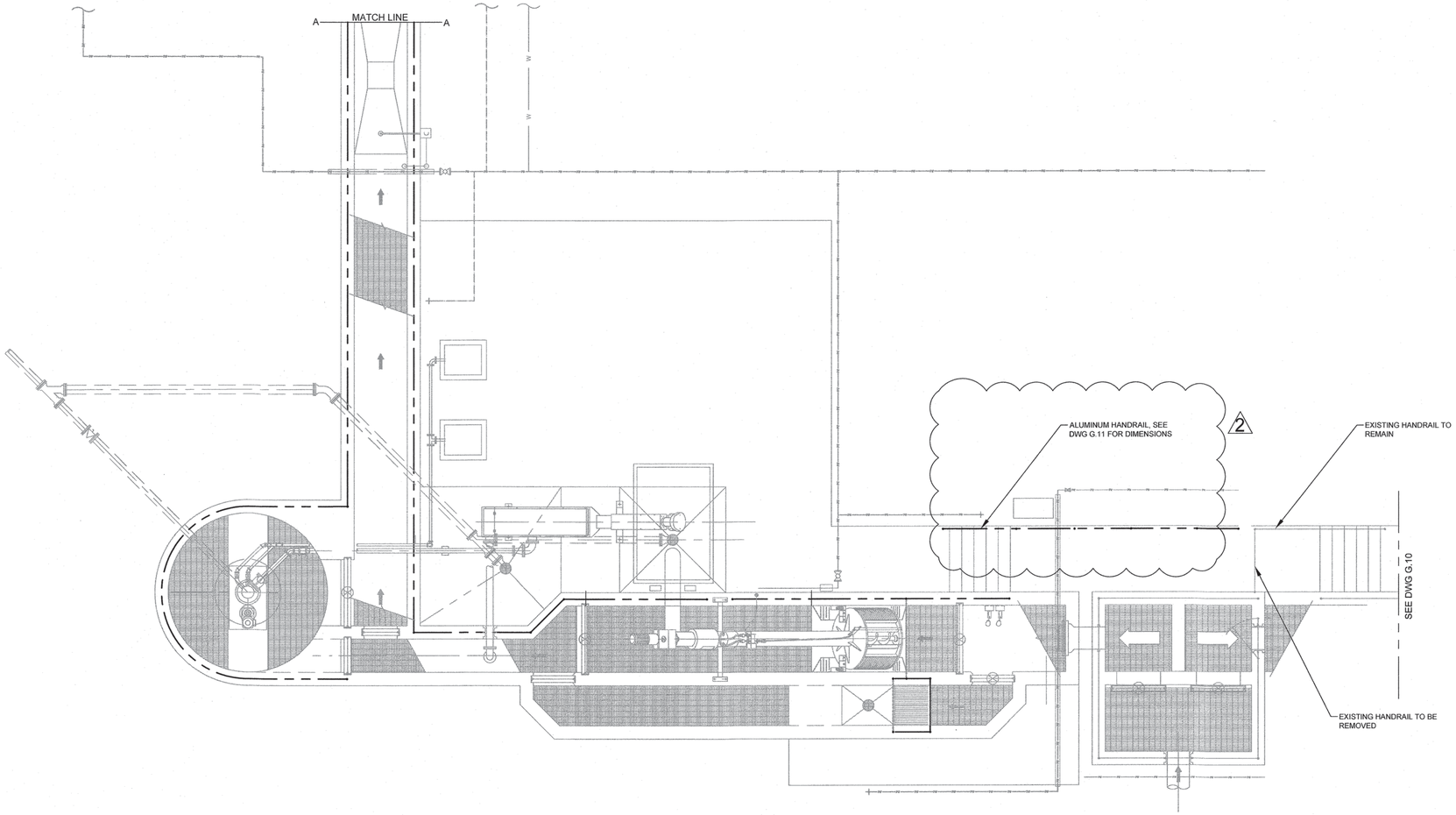

PROPOSED HEADWORKS

SCALE: 1" = 5'

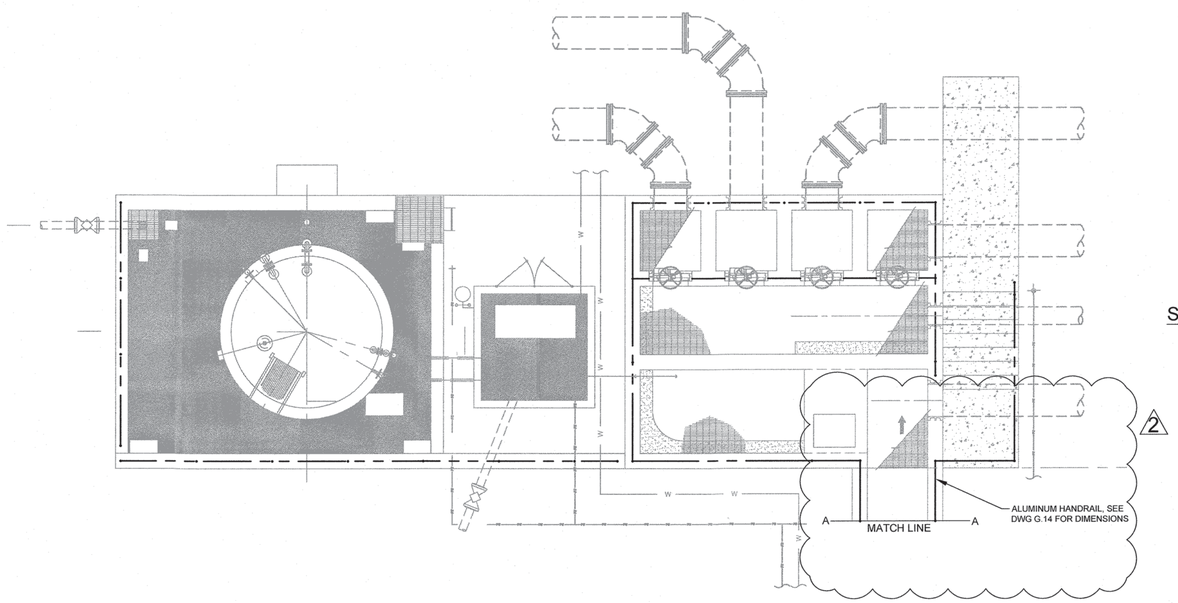

SBR INFLUENT FLOW SPLITTER

SCALE: 1" = 5'

FINAL DRAWINGS - NOT RELEASED FOR CONSTRUCTION

WK DICKSON
community infrastructure consultants
616 COLONNADE DRIVE
CHARLOTTE, NC 28205
(t)704-334-5348
(f)704-334-0078
WWW.WKDICKSON.COM
NC LICENSE NO.F-0374

NORTH CAROLINA PROFESSIONAL SEAL 8802 ENGINEER CHARLES R. FRONEBERGER 9-23-19

PROFESSIONAL SEAL

REVISION RECORD

NO.	DATE	DESCRIPTION	BY
1	10/9/18	ISSUE FOR OWNER/NCDEQ REVIEW	CRF
2	9/17/19	NOTE ADDED	CRF

PROJECT NAME: KILLIAN CREEK WWTP PHASE 3 UPGRADE

DRAWING TITLE: HANDRAIL DETAIL PLAN - 1

PROJ. MGR.:	CRF
DESIGN BY:	CRF
DRAWN BY:	NS/CH
PROJ. DATE:	SEPT. 2018

DRAWING NUMBER:

G.46 OF 168

WKD PROJ. NO.:

20170294.00.CL

COPYRIGHT: G. WK DICKSON & CO., INC. ALL RIGHTS RESERVED. REPRODUCTION OR USE OF THE CONTENTS OF THIS DOCUMENT, ADDITIONS OR DELETIONS TO THIS DOCUMENT, IN WHOLE OR IN PART, WITHOUT WRITTEN CONSENT OF WK DICKSON & CO., INC., IS PROHIBITED. ONLY COPIES FROM THE ORIGINAL OF THIS DOCUMENT, MARKED WITH AN ORIGINAL SIGNATURE AND SEAL SHALL BE CONSIDERED TO BE VALID, TRUE COPIES.

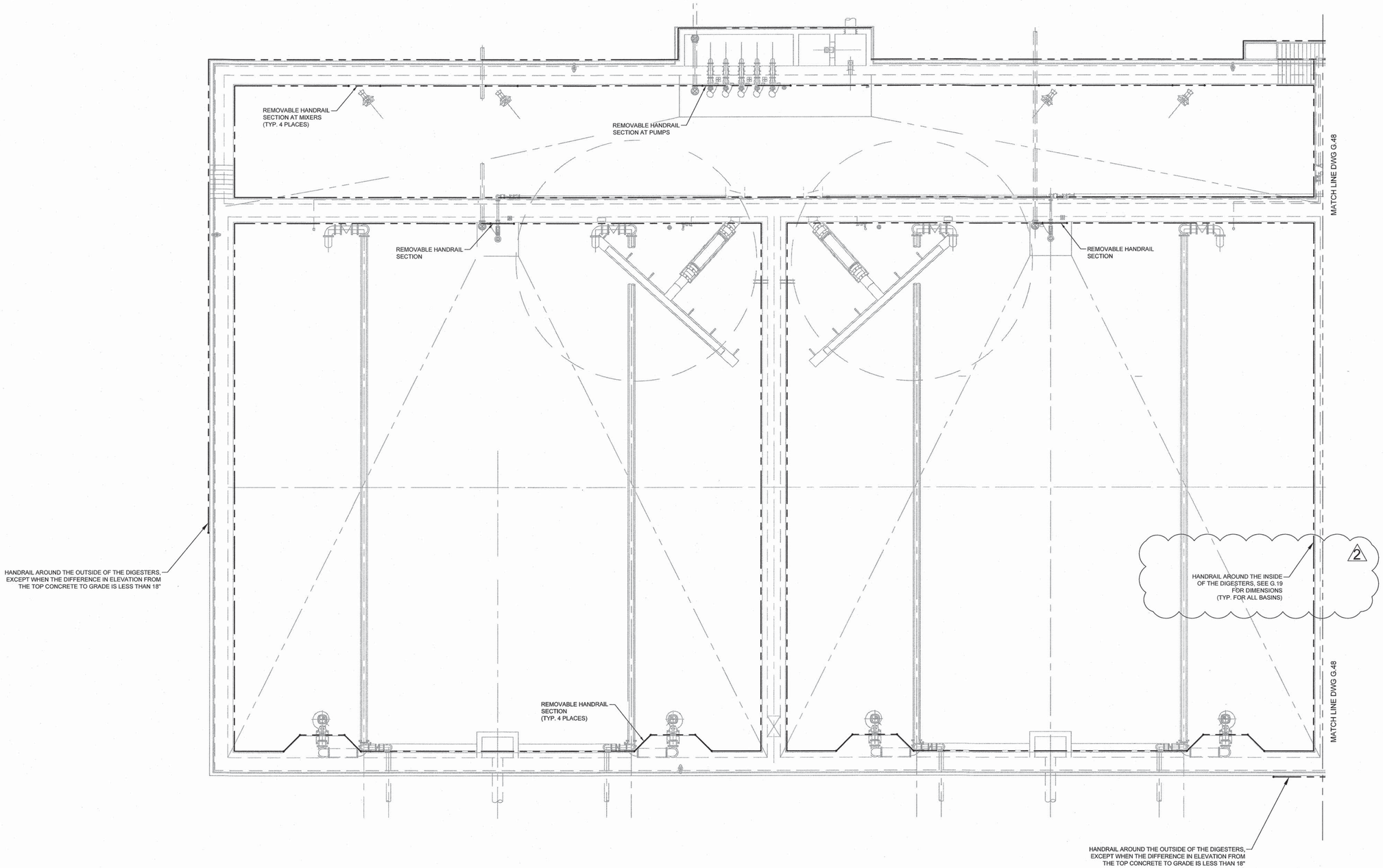

PROPOSED SBR NO. 3 & 4 POST EQ.

SCALE: 1" = 10'

COPYRIGHT © WK DICKSON & CO., INC. ALL RIGHTS RESERVED. REPRODUCTION OR USE OF THE CONTENTS OF THIS DOCUMENT, ADDITIONS OR DELETIONS TO THIS DOCUMENT, IN WHOLE OR IN PART, WITHOUT WRITTEN CONSENT OF WK DICKSON & CO., INC., IS PROHIBITED. ONLY COPIES FROM THE ORIGINAL OF THIS DOCUMENT MARKED WITH AN ORIGINAL SIGNATURE AND SEAL SHALL BE CONSIDERED TO BE VALID, TRUE COPIES.

FILE PATH: L:\Projects\LINCL\20170294.00CL - Killian Creek WWTP Ph 3 Upgrade Const\CADD\Plan Set\20170294_C_SHT_Handrail_Layout.dwg; J:\Projects\LINCL\20170294.00CL - Killian Creek WWTP Ph 3 Upgrade Const\CADD\Plan Set\20170294_C_SHT_Handrail_Layout.dwg; CHEATH, 6/18/2019 2:51:27 PM

WK DICKSON
community infrastructure consultants

616 COLONNADE DRIVE
CHARLOTTE, NC 28205
(t)704-334-5348
(f)704-334-0078

WWW.WKDICKSON.COM

NC LICENSE NO.F-0374

NORTH CAROLINA PROFESSIONAL ENGINEER SEAL 8802 CHARLES F. FRONEBERGER 6-23-19

PROFESSIONAL SEAL

REVISION RECORD

NO.	DATE	DESCRIPTION	BY
1	10/9/18	ISSUE FOR OWNER/NCDEQ REVIEW	CRF
2	9/17/19	NOTE ADDED	CRF

PROJECT NAME: KILLIAN CREEK WWTP PHASE 3 UPGRADE

DRAWING TITLE: HANDRAIL DETAIL PLAN - 2

FINAL DRAWINGS - NOT RELEASED FOR CONSTRUCTION

PROJ. MGR.:	CRF
DESIGN BY:	CRF
DRAWN BY:	NS/CH
PROJ. DATE:	SEPT. 2018

DRAWING NUMBER:

G.47 OF 168

WKD PROJ. NO.:

20170294.00.CL

COPYRIGHT © W.K. DICKSON & CO., INC., ALL RIGHTS RESERVED. REPRODUCTION OR USE OF THE CONTENTS OF THIS DOCUMENT, ADDITIONS OR MODIFICATIONS THERETO, IN WHOLE OR IN PART, WITHOUT WRITTEN CONSENT OF W.K. DICKSON & CO., INC., IS PROHIBITED. ONLY COPIES FROM THE ORIGINAL OF THIS DOCUMENT, MARKED WITH AN ORIGINAL SIGNATURE AND SEAL SHALL BE CONSIDERED TO BE VALID, TRUE COPIES.

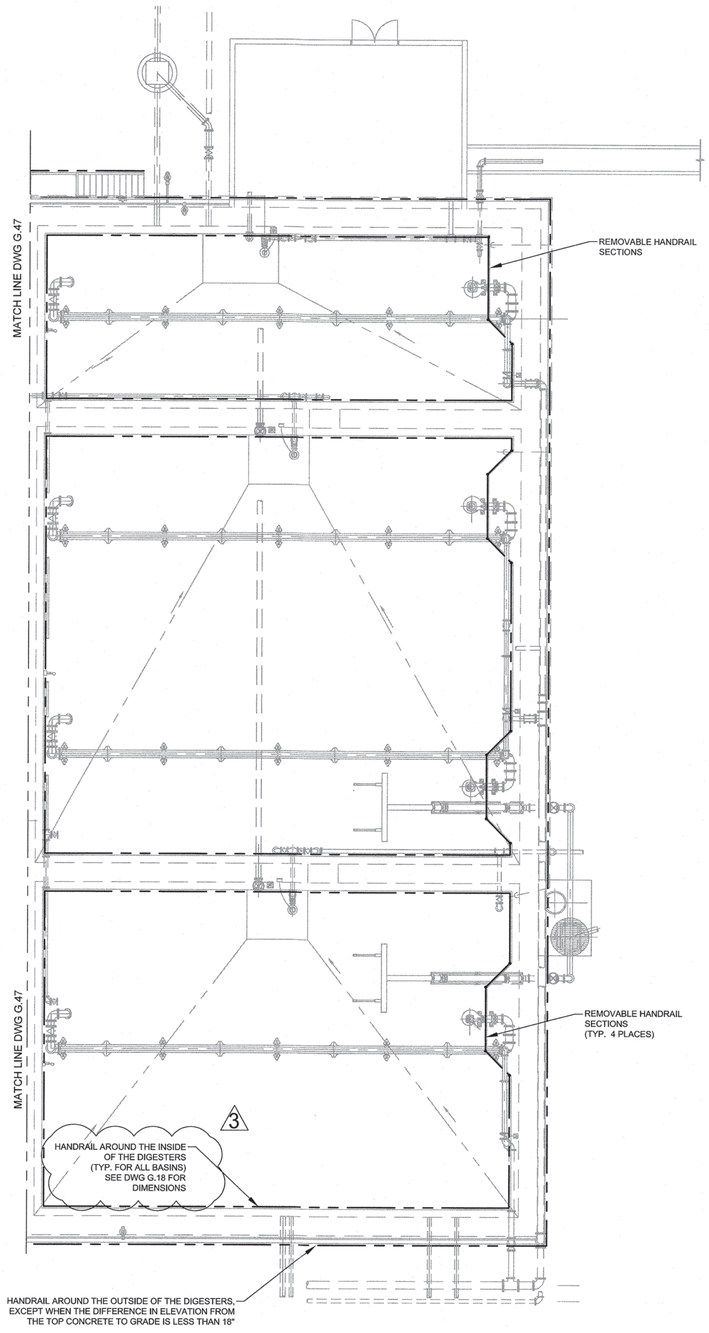

PROPOSED DIGESTERS & SLUDGE HOLDING BASIN

SCALE: 1" = 10'

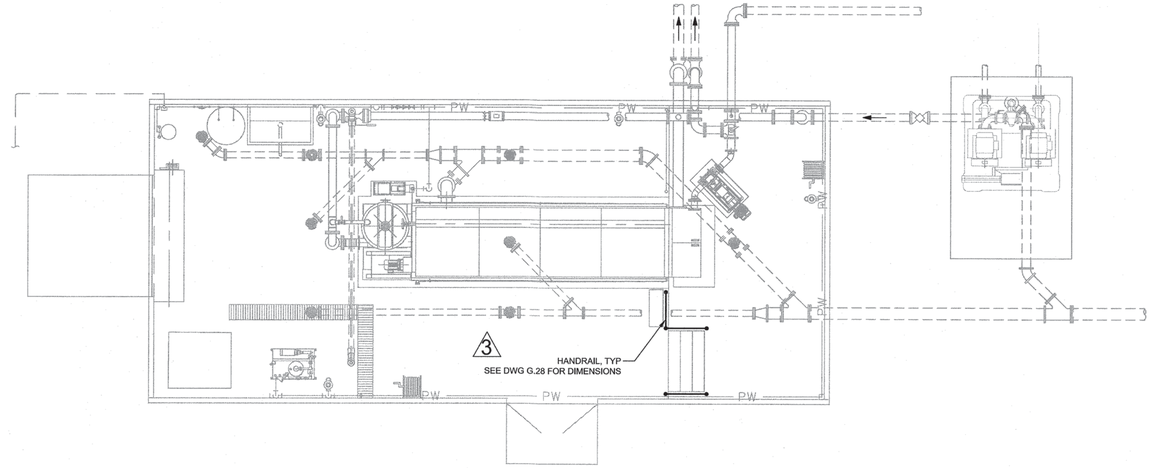

PROPOSED RDT BUILDING

SCALE: 1" = 5'

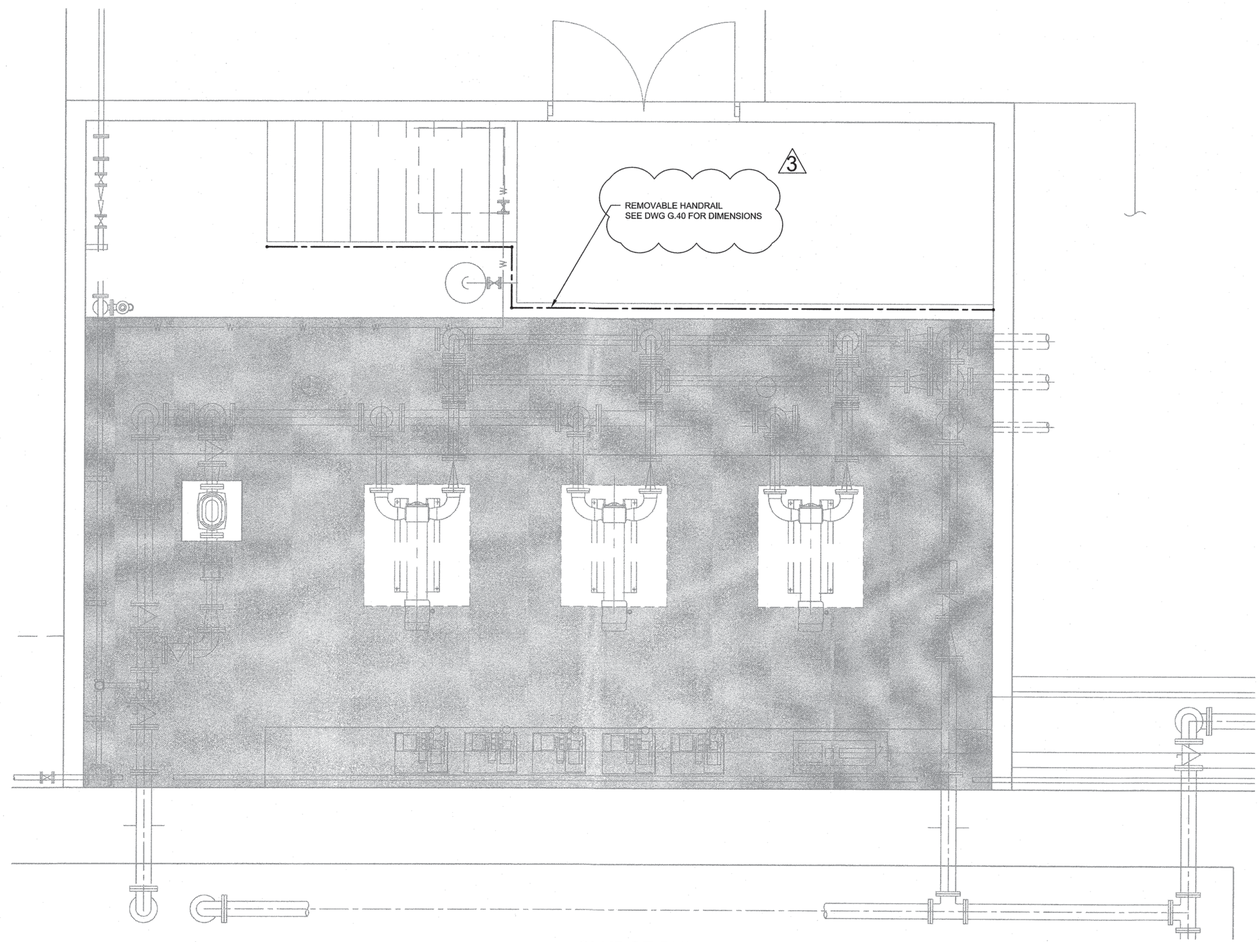

SLUDGE PUMP BUILDING #4A

SCALE: 1" = 30'

WK DICKSON
community infrastructure consultants

616 COLONNADE DRIVE
CHARLOTTE, NC 28205
(t)704-334-5348
(f)704-334-0078

WWW.WKDICKSON.COM

NC LICENSE NO.F-0374

NORTH CAROLINA PROFESSIONAL ENGINEER SEAL 18803 CHARLES R. FRONEBERGER

PROFESSIONAL SEAL

REVISION RECORD

NO.	DATE	DESCRIPTION	BY
1	10/9/18	ISSUE FOR OWNER/NCDEQ REVIEW	CRF
2	5/21/19	REALIGNED SLUDGE PUMP BUILDING #4A HANDRIAL	WBK
3	9/17/19	ADDITIONAL NOTES	WBK

PROJECT NAME: KILLIAN CREEK WWTP PHASE 3 UPGRADE

DRAWING TITLE: HANDRAIL DETAIL PLAN - 3

PROJ. MGR.:	CRF
DESIGN BY:	CRF
DRAWN BY:	NS/CH
PROJ. DATE:	SEPT. 2018

DRAWING NUMBER:

G.48 OF 168

WKD PROJ. NO.:

20170294.00.CL

- FINAL DRAWINGS - - NOT RELEASED FOR CONSTRUCTION

COPYRIGHT © W.K. DICKSON & CO., INC., ALL RIGHTS RESERVED. REPRODUCTION OR USE OF THE CONTENTS OF THIS DOCUMENT, ADDITIONS OR CHANGES THERETO, WITHOUT WRITTEN PERMISSION OF W.K. DICKSON & CO., INC., IS PROHIBITED. ALL COPIES MUST BE MADE FROM THE ORIGINAL OF THIS DOCUMENT, MARKED WITH AN ORIGINAL SIGNATURE AND SEAL SHALL BE CONSIDERED TO BE VALID. TRUE COPIES.

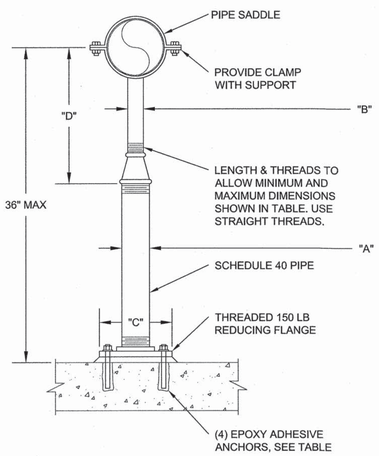

FLOOR PIPE SUPPORT SCHEDULE
DIMENSIONS IN INCHES

PIPE SIZE	"A"	"B"	"C"	"D"		ANCHORS	
				MINIMUM	MAXIMUM	DIA	EMBED
≤ 2 1/2	2 1/2	1 1/2	9	8	13	5/8	5
3	2 1/2	1 1/2	9	8 1/2	13 1/2	5/8	5
3 1/2	2 1/2	1 1/2	9	8 1/2	13 1/2	5/8	5
4	3	2 1/2	9	9 1/2	14	5/8	5
6	3	2 1/2	9	10 1/2	15 1/2	5/8	5
8	3	2 1/2	9	11 1/2	16 1/2	5/8	5
10	3	2 1/2	9	13 1/2	18 1/2	5/8	5
12	3	2 1/2	9	15	19 1/2	5/8	5
14	4	3	11	16 1/2	20 1/2	3/4	6 5/8
16	4	3	11	17 1/2	22 1/2	3/4	6 5/8
18	6	3 1/2	13 1/2	19 1/2	24	3/4	6 5/8
20	6	3 1/2	13 1/2	21	25 1/2	3/4	6 5/8
24	6	4	13 1/2	23 1/2	28 1/2	3/4	6 5/8
30	6	4	13 1/2	27	31 1/2	3/4	6 5/8
32	6	4	13 1/2	28 1/2	32 1/2	3/4	6 5/8
36	6	4	13 1/2	30 1/2	34 1/2	3/4	6 5/8

FLOOR PIPE SUPPORT
NOT TO SCALE

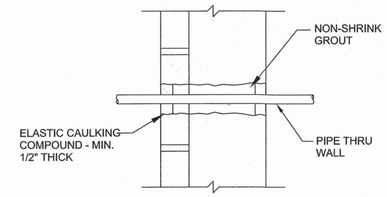

MASONRY WALL PIPE PENETRATION DETAIL
NOT TO SCALE

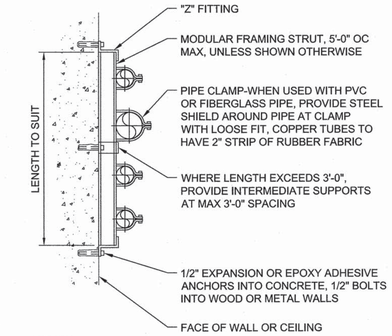

NOTES:

1. UP TO 8" DIAMETER PIPES ONLY.
2. MAXIMUM OF 3-6" PIPES.

SURFACE MOUNT MODULAR STRUT
NOT TO SCALE

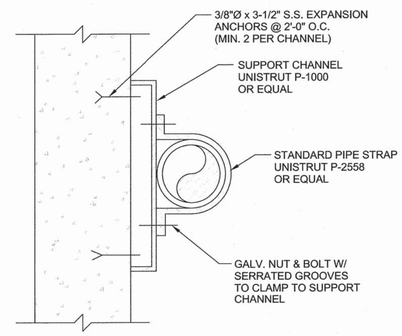

PIPE SUPPORT DETAIL - WALL
NOT TO SCALE

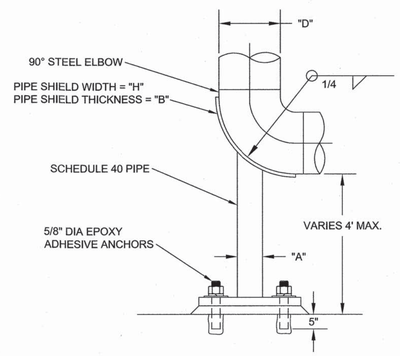

PIPE SIZE			
"A"	"B"	"D"	"H"
2"	-	4"	-
3"	-	6"	-
4"	5/16"	8"	2"
4"	5/16"	10"	2 1/2"
6"	5/16"	12"	3"

STEEL ELBOW SUPPORT
NOT TO SCALE

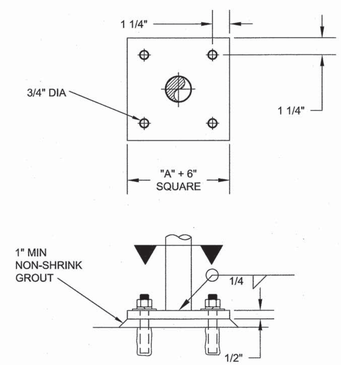

BASE PLATE DETAIL
NOT TO SCALE

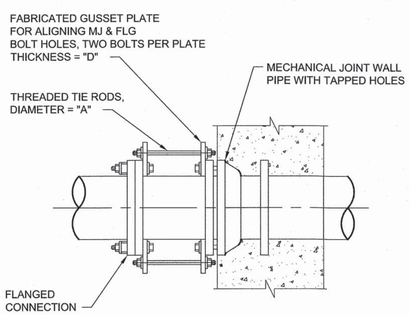

NOTE:

1. USE WHEN SPACE IS LIMITED AND YOU CANNOT INSTALL A DOUBLE MECHANICAL JOINT.

PIPE SIZE	"D"	"A"	MAX PRESSURE	
			2-RODS	3-RODS
2	3/8	5/8	200	-
2 1/2	3/8	5/8	200	-
3	3/8	5/8	200	-
4	3/8	5/8	200	-
5	3/8	5/8	200	-
6	1/2	5/8	140	200
8	1/2	3/4	140	190
10	3/4	7/8	140	190
12	3/4	1	140	190
14	3/4	1	85	130
16	3/4	1 1/8	65	110
18	3/4	1 1/8	65	110
20	3/4	1 1/8	65	110
24	1	1 1/4	65	100

RESTRAINED MECHANICAL JOINT TO FLANGED JOINT
NOT TO SCALE

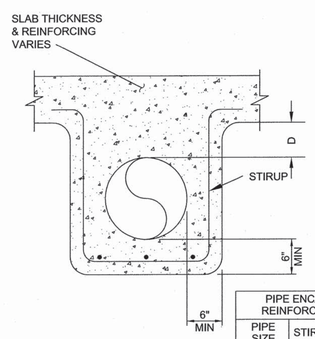

PIPE ENCASEMENT REINFORCING TABLE

PIPE SIZE	STIRUPS	BOTTOM BARS
4"-14"	#3@12	3#4
16"-20"	#3@12	4#4
24"-30"	#4@12	4#4
36"-48"	#4@8	5#4

NOTE:

1. FOR ALL UNDERSLAB PIPE ENCASEMENT WHEN D < 4'-0".

UNDERSLAB PIPE ENCASEMENT
NOT TO SCALE

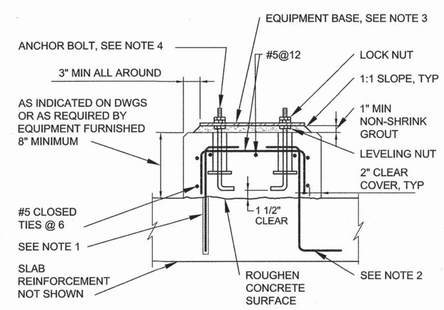

NOTES:

1. FOR NEW EQUIPMENT BASES ON EXISTING SLABS, DRILL INTO EXISTING SLAB TO DEVELOPMENT DEPTH AT 12" CENTERS AROUND PERIMETER OF EQUIPMENT BASE AND SET #5 HOOKED DOWELS IN EPOXY GROUT.
2. FOR EQUIPMENT BASES ON NEW SLABS, PROVIDE #5 DOWELS HAVING TWO HOOKED ENDS AT 12" CENTERS AROUND PERIMETER OF EQUIPMENT BASE.
3. EQUIPMENT BASE DIMENSIONS SHALL BE AS INDICATED ON THE DRAWINGS OR AS DETERMINED BY THE EQUIPMENT MANUFACTURER AND APPROVED BY THE ENGINEER.
4. ANCHOR BOLTS AS RECOMMENDED BY THE EQUIPMENT MANUFACTURER. BOLTS SHALL BE HELD IN POSITION WITH A TEMPLATE WHILE EQUIPMENT BASE IS BEING CAST.
5. PIPE SLEEVES SHALL BE USED TO PROVIDE THE ANCHOR BOLT A MINIMUM MOVEMENT OF 1/2" IN ALL DIRECTIONS. MINIMUM SLEEVE LENGTH SHALL BE 8 TIMES THE BOLT DIAMETER. SLEEVES SHALL BE FILLED WITH NON-SHRINK GROUT. PIPE SLEEVES SHALL HAVE A MINIMUM INTERNAL DIAMETER 1" GREATER THAN BOLT DIAMETER AND A MAXIMUM INTERNAL DIAMETER OF 3" GREATER THAN BOLT DIAMETER.
6. EQUIPMENT BASES SHALL BE INSTALLED LEVEL. TOLERANCE IS 1/8"

EQUIPMENT BASE
NOT TO SCALE

WK DICKSON
community infrastructure consultants
616 COLONNADE DRIVE
CHARLOTTE, NC 28205
(t)704-334-5348
(f)704-334-0078
WWW.WKDICKSON.COM
NC LICENSE NO.F-0374

NORTH CAROLINA PROFESSIONAL SEAL 8802 ENGINEER CHARLES F. FROVEDERIGER

PROFESSIONAL SEAL

NO.	DATE	DESCRIPTION	BY

REVISION RECORD

FINAL DRAWINGS - - NOT RELEASED FOR CONSTRUCTION

PROJECT NAME: KILLIAN CREEK WWTP PHASE 3 UPGRADE

DRAWING TITLE: UTILITY DETAILS

PROJ. MGR.:	CRF
DESIGN BY:	CRF
DRAWN BY:	NS/CH
PROJ. DATE:	SEPT. 2018

DRAWING NUMBER:

G.49 OF 168

WKD PROJ. NO.:

20170294.00.CL

1000 HEADWORKS (DWG G.11)

V-1001	Grit Classifier Influent Valve	4”	PV
V-1002	Vortex Grit Separator Drain Valve	6”	PV
V-1003	Vortex Grit Separator Air Lift Pump Valve	1-1/2”	BV
V-1004	Vortex Grit Separator Air Scour Valve	1-1/2”	BV
V-1005	Screen Wash Water Supply Valve	2”	GV
V-1006	Upper Screen Wash Valve (FWE)	1”	Solenoid
V-1007	Middle Screen Wash Valve (FWE)	1”	Solenoid
V-1008	Lower Screen Wash Valve (FWE)	1”	Solenoid
V-1009	B-101 Grit Blower Air Outlet Check Valve	2”	CK
V-1010	B-101 Grit Blower Air Outlet Valve	2”	Ball
V-1011	B-102 Grit Blower Air Outlet Check Valve	2”	CK
V-1012	B-102 Grit Blower Air Outlet Valve	2”	Ball

200 SBR SYSTEM & DIGESTERS (DWG G.18, G.19)

V-200	SHT Sludge to Exist. SHT Valve	6"	PV
V-201	Existing SHT Sludge to SHT Isolation Valve	6"	PV
V-202	DIG #1 Sludge Transfer Valve	6"	PV
V-203	DIG #1 to DIG #3 Transfer Valve	6"	PV
V-204	DIG # 4 Sludge Effluent Valve	6"	PV
V-205	DIG # 4 Sludge ARV	2"	ARV
V-206	DIG # 4 Sludge ARV Connection	2"	BV
V-207	DIG # 4 Sludge to DIG #1 Valve	6"	PV
V-208	DIG #4 Sludge to DIG # 3	6"	PV
V-209	DIG # 3 Air Supply Valve	8"	BV W/Motor
V-210	DIG # 4 Air Supply Valve	8"	BV W/Motor
V-211	DIG # 4 Jet isolation Valve 1	6"	BV
V-212	SHT Air Supply Valve	8"	BV W/Motor
V-213	WAS Discharge to DIG # 3	6"	PV
V-214	WAS Discharge to DIG # 4	6"	PV
V-215	DIG #3 Pump to DIG #1 Check	6"	Check
V-216	Sludge from DIG # 4 Pump to SHT Check Valve	6"	Check
V-217	Sludge transfer to Ext. MH Valve	6"	PV
V-218	DIG #1 to EXT. SHT Valve	6"	PV
V-219	Existing SHT to SHT Isolation Valve	6"	PV
V-220	SHT to Existing SHT Valve	6"	PV
V-221	Existing SHT to SHT Check	6"	CV
V-222	Existing SHT ARV	2"	ARV
V-223	Existing SHT ARV Connection	2"	GV
V-224	DIG # 4 Jet isolation Valve 2	6"	BV
V-225	Pipe Trench Drain Valve	6"	PV
V-226	N/A		
V-227	N/A		
V-228	N/A		
V-229	N/A		
V-230	N/A		
V-231	SBR #3 WAS Pump Check Valve	6"	CK
V-232	SBR #3 WAS Pump Valve	6"	PV
V-233	SBR #3 WAS Pump AVV Connection	2”	BV
V-234	SBR #3 WAS Pump AVV	2”	AVV
V-235	SBR #4 WAS Pump Check Valve	6"	CK
V-236	SBR #4 WAS Pump Valve	6"	PV
V-237	SBR #4 WAS Pump AVV Connection	2”	BV
V-238	SBR #4 WAS Pump AVV	2”	AVV
V-239	SBR #3 Decant Valve (Motor Operated)	24”	BF
V-240	SBR #4 Decant Valve (Motor Operated)	24”	BF
V-241	SBR #3 Drain Valve	8”	MV
V-242	SBR #4 Drain Valve	8”	MV
V-243	Post EQ Drain Valve	8”	PV
V-244	Post EQ Effluent Channel Drain Valve	8”	PV
V-245	SBR #3 Air Supply Valve	12”	BV
V-246	SBR #4 Air Supply Valve	12”	BV
V-247	SBR Blower #1 Discharge Check Valve	8"	CK
V-248	SBR Blower #1 Discharge Valve	8"	BV
V-249	SBR Blower #2 Discharge Check Valve	8"	Ck
V-250	SBR Blower #2 Discharge Valve	8"	BV
V-251	SBR Blower #3 Discharge Check Valve	8"	CK
V-252	SBR Blower #3 Discharge Valve	8"	BF
V-253	SBR Blower #4 Discharge Check Valve	6”	CK
V-254	SBR Blower #4 Discharge Valve	6”	BV
V-255	SBR #1/#2 Air Manifold Connection Valve	12”	BV
V-256	SBR #3/#4 Air Manifold Connection Valve	12”	BV
V-257	Caustic to DIG #3	1"	BV
V-258	Caustic to DIG #4	1"	BV
V-259	Caustic to SHT	1"	BV

V-260	DIG #3 Decant Valve	8”	PV
V-261	DIG #4 Decant Valve	8”	PV
V-262	SHT Decant Valve @ 699.5’	8”	PV
V-263	SHT Decant Valve @ 695.0’	8”	PV
V-264	SHT Decant Valve @ 690.0’	8”	PV
V-265	DIG #3 Drain Valve	8”	MV
V-266	DIG #4 Drain Valve	8”	MV
V-267	SHT Drain Valve	8”	PV
V-268	DIG #3 Blower 205 Valve	8"	BV
V-269	DIG #3 Blower 205 Ck Valve	8"	CK
V-270	DIG #3 Blower 206 Valve	8"	BV
V-271	DIG #3 Blower 206 Ck Valve	8"	CK
V-272	DIG #4 Blower 207 Valve	8"	BV
V-273	DIG #4 Blower 207 Ck Valve	8"	CK
V-274	DIG #4 Blower 208 Valve	8"	BV
V-275	DIG #4 Blower 208 Ck Valve	8"	CK
V-276	DIG#3 Air Supply Valve	8”	BV
V-277	DIG #3 Air Manifold Valve	8”	BV
V-278	DIG #3 – DIG #4 Air Manifold Valve	8”	BV
V-279	DIG #4 Air Supply Valve	8”	BV
V-280	SBR #3 Air Supply 1	10"	BV
V-281	SBR #3 Air Supply 2	10"	BV
V-282	SBR #4 Air Supply 1	10"	BV
V-283	SBR #4 Air Supply 2	10"	BV
V-284	SBR #4 Jet Aeration Recirculation 1	16"	PV
V-285	SBR #4 Jet Aeration Recirculation 2	16"	PV
V-286	SBR #3 Jet Aeration Recirculation 1	16"	PV
V-287	SBR #3 Jet Aeration Recirculation 2	16"	PV
V-288	DIG # 3 Jet Areation Recirculation	10"	PV
V-289	DIG # 4 Jet Areation Recirculation 1	10"	PV
V-290	DIG # 4 Jet Areation Recirculation 2	10"	PV
V-291	SHT Jet Areation Recirculation	10"	PV
V-292	SHT WAS Valve	6"	PV
V-293	SHT WAS AVV	6"	AVV
V-294	SHT WAS AVV Connection	6"	GV
V-295	SHT WAS Valve	6"	PV
V-296	SHT Sludge ARV	2"	ARV
V-297	SHT Sludge ARV Connection	2"	GV
V-298	SHT Sludge Check Valve	6"	Check
V-299	N/A (OMITTED)		

400 EFFLUENT FILTER SYSTEM (G.33)

V-401	Effluent Disk Filter #1 Influent Valve	16"	BF
V-402	Effluent Disk Filter #2 Influent Valve	16"	BF
V-403	Effluent Disk Filter #3 Influent Valve	16"	BF
V-404	Effluent Disk Filter #4 Influent Valve	16"	BF
V-405	Effluent Disk Filter #5 Influent Valve	16"	BF
V-406	Effluent Disk Filter #1 Backwash Drain Valve	6"	GV
V-407	Effluent Disk Filter #2 Backwash Drain Valve	6"	GV
V-408	Effluent Disk Filter #3 Backwash Drain Valve	6"	GV
V-409	Effluent Disk Filter #4 Backwash Drain Valve	6"	GV
V-410	Effluent Disk Filter #5 Backwash Drain Valve	6"	GV
V-411	Effluent Disk Filter #1 Drain Valve	2"	BAV
V-412	Effluent Disk Filter #2 Drain Valve	2"	BAV
V-413	Effluent Disk Filter #3 Drain Valve	2"	BAV
V-414	Effluent Disk Filter #4 Drain Valve	2"	BAV
V-415	Effluent Disk Filter #5 Drain Valve	2"	BAV
V-416	Effluent Disk Filter Overflow to Plant Drain Valve	18"	BF
V-417	N/A (OMITTED)		
V-418	Effluent Disk Filter #1 Backwash Valve	2"	W/ Equip
V-419	Effluent Disk Filter #2 Backwash Valve	2"	W/ Equip
V-420	Effluent Disk Filter #3 Backwash Valve	2"	W/ Equip
V-421	Effluent Disk Filter #4 Backwash Valve	2"	W/ Equip
V-422	Effluent Disk Filter #5 Backwash Valve	2"	W/ Equip
V-423	Effluent Filter Plant Water to Area Hose Hydrants	2"	GV
V-424	Effluent Filter Plant Water Cold Isolation	2"	GV
V-425	Effluent Filter Plant Water From Heater	2"	GV
V-426	Effluent Filter Plant Water to Heater	2"	GV
V-427	Effluent Filter Plant Water Hot to Sink	2"	GV
V-428	Effluent Filter Plant Water Cold to Sink	2"	GV
V-429	Effluent Filter Plant Water Hot to Mixing Valve	2"	GV
V-430	Effluent Filter Plant Water Cold to Mixing Valve	2"	GV
V-431	Effluent Filter Emergency Bypass	18"	BFV

NOTES:
1. VALVE SCHEDULES ARE NOT TO BE USED AS A BASIS OF QUANTITY ESTIMATION FOR BIDDING.

500 SLUDGE THICKENING SYSTEM (DWG G.27, G.41)

RPBP-501	Reduced Pressure Backflow Preventer	3"	RPBP
V-500	SHT Biosolids Valve	6”	Plug
V-501	Biosolids System Flush Water Valve	2”	Gate
V-502	Grinder By-Pass Valve	6”	Plug
V-503	Grinder Influent Valve	6”	Plug
V-504	Grinder Effluent Valve	6”	Plug
V-505	Rotary Lobe Pump #5 Influent Valve	4”	Plug
V-506	Rotary Lobe Pump #5 Effluent Check Valve	4”	Check
V-507	Rotary Lobe Pump #5 Effluent FM #1 Valve	4”	Plug
V-508	Rotary Lobe Pump #5 Effluent FM #2 Valve	4”	Plug
V-509	Rotary Lobe Pump #6 Influent Valve	4”	Plug
V-510	Rotary Lobe Pump #6 Effluent Check Valve	4”	Check
V-511	Rotary Lobe Pump #6 Effluent FM #1 Valve	4”	Plug
V-512	Rotary Lobe Pump #6 Effluent FM #2 Valve	4”	Plug
V-513	Rotary Lobe Pump #7 Influent Valve	4”	Plug
V-514	Rotary Lobe Pump #7 Effluent Check Valve	4”	Check
V-515	Rotary Lob Pump #7 Effluent FM #1 Valve	4”	Plug
V-516	Rotary Lob Pump #7 Effluent FM #2 Valve	4”	Plug
V-517	SBR #3 Caustic Carrier Water Inf. Valve	¾”	Ball
V-518	SBR #3 Caustic Carrier Water Eff. Solenoid Valve	¾”	Solenoid
V-519	SBR #3 Caustic Carrier Water Eff. Ck. Valve	¾”	Check
V-520	SBR #3 Caustic Carrier Water Eff. Valve	¾”	Ball
V-521	SBR #4 Caustic Carrier Water Inf. Valve	¾”	Ball
V-522	SBR #4 Caustic Carrier Water Eff. Solenoid Valve	¾”	Solenoid
V-523	SBR #4 Caustic Carrier Water Eff. Ck. Ball Valve	¾”	Check
V-524	SBR #4 Caustic Carrier Water Eff. Valve	¾”	Ball
V-525	DIG #3, #4 & SHT#2 Caustic Carrier Water Inf. Valve	¾”	Ball
V-526	DIG #3, #4 & SHT Caustic Carrier Eff. Solenoid Valve	¾”	Solenoid
V-527	DIG #3, #4 &SHT Caustic Carrier Eff. Ck. Valve	¾”	Check
V-528	DIG #3, #4 &SHT Caustic Carrier Eff. Valve	¾”	Ball
V-529	SBR #3 Caustic Pump Influent Valve	1”	Ball
V-530	SBR #3 Caustic Pump Effluent Ck. Valve	1”	Check
V-531	SBR #3 Caustic Pump Effluent Valve	1”	Ball
V-532	SBR #3/#4 Caustic Pump Influent Valve	1”	Ball
V-533	SBR #3/#4 Caustic Pump Effluent Ck. Valve	1”	Check
V-534	SBR #3/#4 Caustic Pump Effluent Valve	1”	Ball
V-535	SBR #3/#4 Caustic Pump Divert to SBR #3	1”	Ball
V-536	SBR #3/#4 Caustic Pump Divert to SBR #4	1”	Ball
V-537	SBR #4 Caustic Pump Influent Valve	1”	Ball
V-538	SBR #4 Caustic Pump Effluent Ck. Valve	1”	Check
V-539	SBR #4 Caustic Pump Effluent Valve	1”	Ball
V-540	DIG #3, #4 & SHT 2 Caustic Pump #1 Inf. Valve	1”	Ball
V-541	DIG #3, #4 & SHT 2 Caustic Pump #1 Ck. Valve	1”	Check
V-542	DIG #3, #4 & SHT 2 Caustic Pump #1 Eff. Valve	1”	Ball
V-543	DIG #3, #4 & SHT 2 Caustic Pump #2 Inf. Valve	1”	Ball
V-544	DIG #3, #4 & SHT 2 Caustic Pump #1 Eff. Ck. Valve	1”	Check
V-545	DIG #3, #4 & SHT 2Caustic Pump #1 Eff. Valve	1”	Ball
V-546	Caustic Recirculation Pump Influent Valve	2”	Ball
V-547	Caustic Recirculation Pump Effluent Ck. Valve	2”	Check
V-548	Caustic Recirculation Pump Effluent Valve	2”	Ball
V-549	SHT FM Check Valve	6”	Check
V-550	SHT/Digester #4 Valve	6”	Plug
V-551	SHT/Digester #4 FM Valve	6"	Plug
V-552	SHT/ Digester #4 to Dewatering System FM #1 Valve	6"	Plug
V-553	SHT/ Digester #4 to Dewatering System FM #2 Valve	6"	Plug
V-554	Plant Water to Heater	2"	GV
V-555	Plant Water from Heater	2"	GV
V-556	Cold Water to Mixing Valve	2"	GV
V-557	Exist. Plant Water to Heater	2"	GV
V-558	Exist. Plant Water from Heater	2"	GV
V-559	Exist. Cold Water to Mixing Valve	2"	GV
V-560	Caustic Recirc. Isolation Valve	2"	BV
V-561	Exist. RDT Plant Water to Heater	2"	GV
V-562	Exist. RDT Plant Water Cold	2"	GV
V-563	Exist. RDT Plant Water Hot to Hose Bibb	2"	GV
V-564	Exist. RDT Plant Water Cold to Hose Bibb	2"	GV
V-565	Exist. RDT Plant Water Hot to Area Sink	2"	GV
V-566	Exist. RDT Plant Water Cold to Area Sink	2"	GV
V-567	Exist. RDT Plant Water Hot to Mixing Vavle	2"	GV
V-568	Exist. RDT Plant Water Cold to Mixing Valve	2"	GV
V-569	Exist. RDT Plant Water From Water Heater	2"	GV
V-570	Dig #3 RDT Pump 501 FM Ck. Valve	6”	Check
V-571	Dig #3 RDT Pump 501 FM Valve	6”	Plug
V-572	Dig #3 RDT Pump 502 FM Ck Valve	6”	Check
V-573	Dig #3 RDT Pump 502 FM Valve	6”	Plug
V-574	Dig #3 RDT FM Polymer Mix Valve	6”	Mixing
V-575	FM From RDT Pump Station Valve	6”	Plug
V-576	FM Air Relief Valve	2”	Ball
V-577	3-Way Valve	6”	3-Way Plug
V-578	RDT By-Pass	4”	Plug
V-579	Plant Water to RDT–500 Polymer System	2”	Gate
V-580	Polymer to Pkg Polymer Systrem	2"	Ball

V-581	Plant Water Flush to RDT FM to Dig #3	2”	Ball
V-582	Plant Water Flush to RDT FM to Dig #3	2”	Check
V-583	Plant Water Flush to RDT FM to Dig #4	2”	Ball
V-584	Plant Water Flush to RDT FM to Dig #4	2”	Check
V-585	Plant Water Backwash to RDT Booster Pump	2”	Gate
V-586	Plant Water Backwash at RDT Booster Pump Eff.	2”	Butterfly
V-587	Hot Water Valve	1"	BV
V-588	Cold Water Valve	1"	BV
V-589	RDT Plant Water to Heater	2"	GV
V-590	RDT Plant Water Cold	2"	GV
V-591	RDT Plant Water Hot to Hose Bibb	2"	GV
V-592	RDT Plant Water Cold to Hose Bibb	2"	GV
V-593	RDT Plant Water Hot to Area Sink	2"	GV
V-594	RDT Plant Water Cold to Area Sink	2"	GV
V-595	RDT Plant Water Hot to Mixing Valve	2"	GV
V-596	RDT Plant Water Cold to Mixing Valve	2"	GV
V-597	RDT Plant Water From Water Heater	2"	GV

600 DEWATERING BUILDING (G.42)

RPBP-600	Reduced Pressure Backflow Preventer	3”	RPBP
V-600	Pressure Reducing Valve PW to Dewatering Bldg #2	3”	PRV
V-601	Biosolids FM #1 & FM #2 Isolation Valve	6”	PV
V-602	Biosolids to Truck Load – Bottom Loading Valve	6”	PV
V-603	Biosolids Truck Lower Fill Valve	6”	PV
V-604	Biosolids Truck Fill Valve at Truck Fill	6”	PV
V-605	Biosolids to Rotary Press # 1 Valve	6”	PV
V-606	Biosolids to Flocculator Inlet Valve	4”	PV
V-607	Biosolids Flocculator Eff. 3-Way to RSP or Drain	3”	3-Way PV
V-608	Polymer Makeup Water Inlet Valve	1”	Gate
V-609	Polymer Supply Inlet Valve	2”	Solenoid
V-610	PW to Flocculator Flush	1”	Solenoid
V-611	PW to RSP for Backwash	1"	PV
V-612	Plant Water Into Building	3"	GV
V-613	N/A		
V-614	Biosolids to Rotary Press # 2 Valve	6”	PV
V-615	Biosolids to Flocculator Inlet Valve	4”	PV
V-616	Biosolids Flocculator Eff. 3-Way to RSP or Drain	3”	3-Way PV
V-617	Polymer Makeup Water Inlet Valve	1”	Gate
V-618	Polymer Supply Inlet Valve	2”	Solenoid
V-619	PW to Flocculator Flush	1”	Ball
V-620	PW to RSP for Backwash	1"	Ball
V-621	Polymer Drain Valve	4"	GV
V-622	Polymer Feed System 602 Valve	1"	Solenoid
V-623	Polymer Feed System 601 Valve	1"	Solenoid
V-624	Plant Water Valve	2"	GV
V-625	Plant Water Cold	2"	GV
V-626	Plant Water to Heater	2"	GV
V-627	Hot Water to Mixing Valve	2"	GV
V-628	Cold Water to Mixing Valve	2"	GV
V-629	Hot Water to Area Plumbing	2"	GV
V-630	Cold Water to Area Plumbing	2"	GV

700 P-CHEM FEED SYSTEM (DWG G.14)

701	P-CHEM Recirculation Influent	3"	BV
702	P-CHEM Recirculation Check	2"	Check
703	P-CHEM Recirculation Effluent	2"	BV
704	P-CHEM Feed Pump P-701 Influent	1"	BV
705	P-CHEM Feed Pump P-701 Check	1"	Check
706	P-CHEM Feed Pump P-701 Effluent	1"	BV
707	P-CHEM Feed Pump P-702 Influent	1"	BV
708	P-CHEM Feed Pump P-702 Check	1"	Check
709	P-CHEM Feed Pump P-702 Effluent	1"	BV
710	P-CHEM Feed Pump P-703 Influent	1"	BV
711	P-CHEM Feed Pump P-703 Check	1"	Check
712	P-CHEM Feed Pump P-703 Effluent	1"	BV
713	Plant Water Hose Bibb Valve	1"	GV
714	Rotameter Influent Valve	3/4"	BV
715	Rotameter Control Valve	3/4"	Solenoid
716	Rotameter Check Valve	3/4"	Check
717	Rotamter Effluent Valve	3/4"	BV
718	Pressure Release Valve	1"	PRV
719	FRP Tank P-Chem Effluent	3"	BV
720	FRP Tank P-Chem Recirculation	2"	BV
721	FRP Tank Check Valve	3"	Check
722	Ever-tite Part F	2"	BV
723	FRP Tank Floor Drain Valve	6"	PV
724	FRP Tank Drain Valve	3"	BV
725	Plant Water to Heater	2"	GV
726	Plant Water from Heater	2"	GV
727	Cold Water to Mixing Valve	2"	GV

WK DICKSON
community infrastructure consultants
616 COLONNADE DRIVE
CHARLOTTE, NC 28205
(t)704-334-5348
(f)704-334-0078
WWW.WKDICKSON.COM
NC LICENSE NO.F-0374

NORTH CAROLINA PROFESSIONAL SEAL 8802 ENGINEER CHARLES F. FRONSBERGER

PROFESSIONAL SEAL

NO.	DATE	DESCRIPTION	BY

REVISION RECORD

- NOT RELEASED FOR CONSTRUCTION

FINAL DRAWINGS -

PROJECT NAME: KILLIAN CREEK WWTP PHASE 3 UPGRADE

DRAWING TITLE: VALVE SCHEDULE DETAIL

PROJ. MGR.:	CRF
DESIGN BY:	CRF
DRAWN BY:	NS/CH
PROJ. DATE:	SEPT. 2018

DRAWING NUMBER: G.50 OF 168

WKD PROJ. NO.: 20170294.00.CL

COPYRIGHT © WK DICKSON & CO., INC., ALL RIGHTS RESERVED. REPRODUCTION OF USE OF THIS DOCUMENT BY THIRD PARTIES WITHOUT WRITTEN CONSENT OF WK DICKSON & CO., INC. IS PROHIBITED. ONLY COPIES OF THIS DOCUMENT MARKED WITH ORIGINAL SIGNATURE AND SEAL SHALL BE CONSIDERED TO BE VALID, TRUE COPIES.

FILE PATH:L:\Projects\24CLLK170294KCC - Killian Creek WWTP Ph 3 Upgrade Const\CADD\Plan Sets\20170294_C_DPT_Details Plan.dwg - PHBATH, 11/7/2018 9:18:27 PM

COPYRIGHT ©, W.K. DICKSON & CO., INC. ALL RIGHTS RESERVED. REPRODUCTION OR USE OF THE CONTENTS OF THIS DOCUMENT, ADDITIONS OR DELETIONS TO THIS DOCUMENT, IN WHOLE OR IN PART, WITHOUT WRITTEN CONSENT OF W.K. DICKSON & CO., INC., IS PROHIBITED. ONLY COPIES FROM THE ORIGINAL OF THIS DOCUMENT, MARKED WITH AN ORIGINAL SIGNATURE AND SEAL SHALL BE CONSIDERED TO BE VALID, TRUE COPIES.

2018 APPENDIX B
BUILDING CODE SUMMARY
FOR ALL COMMERCIAL PROJECTS
(Except 1 and 2 - Family Dwellings and Townhouses)

Name of Project: KILLIAN CREEK WASTEWATER TREATMENT PLANT - BLOWER BUILDING
Address: 6769 OLD PLANK ROAD, STANLEY, N.C. Zip Code 28164
Proposed Use: WASTEWATER TREATMENT
Owner or Authorized Agent: DON CHAMBLEE Phone: - Email -
Owned By: ■ City/County ☐ Private ☐ State
Code Enforcement Jurisdiction: ☐ City - ■ County LINCOLN ☐ State

CONTACT

DESIGNER	FIRM	NAME	LICENSE #	TELEPHONE #	EMAIL
Architectural	CBSA ARCHITECTS	J. STEVEN WALKER	4814	828 332-3403	cbsa@cbsa-architects.com
Civil	W.K. DICKSON	CHARLES R FRONEBERGER	8802	704 334-5348	
Electrical	BRITTAIN ENGINEERING	DONALD R. BRITTAIN, PE	7883	828-328-1813	
Fire Alarm	BRITTAIN ENGINEERING	DONALD R. BRITTAIN, PE	7883	828-328-1813	
Plumbing	BRITTAIN ENGINEERING	DONALD R. BRITTAIN, PE	7883	828-328-1813	
Mechanical	BRITTAIN ENGINEERING	DONALD R. BRITTAIN, PE	7883	828-328-1813	
Sprinkler-Standpipe	N/A	N/A	N/A	N/A	
Structural	STEWART ENGINEERING	MICHAEL A. GARDINA, PE	024096	704-334-725	
Retaining Wall >5' High	N/A	N/A	N/A	N/A	
Other					

2018 NC BUILDING CODE: ■ New Building ☐ Shell / Core ☐ 1st Time Interior Completions
☐ Addition ☐ Phased Construction - Shell Core

2018 NC EXISTING BUILDING CODE: (check all that apply)
☐ Prescriptive ☐ Alteration Level I ☐ Historic Property
☐ Repair ☐ Alteration Level II ☐ Change of Use
☐ Chapter 14 ☐ Alteration Level III

CONSTRUCTED: (Date) -- CURRENT OCCUPANCY(S) (CH. 3) --
RENOVATED: (Date) -- PROPOSED OCCUPANCY(S) (CH. 3) --

OCCUPANCY CATEGORY (Table 1604.5): Current: -- Proposed: --

BASIC BUILDING DATA:
Construction Type: (check all that apply) ☐ I-A ☐ I-B ☐ II-A ■ II-B ☐ III-A ☐ III-B ☐ IV ☐ V-A ☐ V-B
Sprinklers ■ No ☐ Partial ☐ Yes ☐ NFPA 13 ☐ NFPA 13R ☐ NFPA 13D
Standpipes: ■ No ☐ Yes Class ☐ I ☐ II ☐ III ☐ Wet ☐ Dry
Primary Fire District: ■ No ☐ Yes Flood Hazard Area: ☐ No ☐ Yes
Special Inspections Required: ☐ No ☐ Yes

GROSS BUILDING AREA TABLE

Floor	Existing (SQ FT)	New (SQ FT)	Sub-Total
3rd Floor			
2nd Floor			
Mezzanine			
1st Floor		1,509	1,509
Basement			
TOTAL	--		1,509

ALLOWABLE AREA

Primary Occupancy Classification(s):
Assembly ☐ A-1 ☐ A-2 ☐ A-3 ☐ A-4 ☐ A-5
Business ☐
Educational ☐
Factory ☐ F-1 Moderate ☐ F-2 Low
Hazardous ☐ H-1 Detonate ☐ H-2 Deflagrate ☐ H-3 Combust ☐ H-4 Health ☐ H-5 HPM
Institutional ☐ I-1 ☐ I-2 ☐ I-3 ☐ I-4
I-1 Condition ☐ 1 ☐ 2
I-2 Condition ☐ 1 ☐ 2
I-3 Condition ☐ 1 ☐ 2 ☐ 3 ☐ 4 ☐ 5
Mercantile ☐
Residential ☐ R-1 ☐ R-2 ☐ R-3 ☐ R-4
Storage ☐ S-1 Moderate ☐ S-2 Low ☐ High Piled
☐ Parking Garage ☐ Open ☐ Enclosed ☐ Repair Garage
Utility and Miscellaneous ■

Accessory Occupancy Classification(s):
Incidental Uses (Table 509):
This separation is not exempt as a Non-Separated Use (see exceptions).
Special Uses (Chapter 4 - List Code Sections):
Special Provisions (Chapter 5 - List Code Sections):
Mixed Occupancy: ■ No ☐ Yes Separation: ____ Hr. Exception:

$$\frac{\text{Actual Area of Occupancy A}}{\text{Allowable Area of Occupancy A}} + \frac{\text{Actual Area of Occupancy B}}{\text{Allowable Area of Occupancy B}} \leq 1$$

$$____ + ____ + \ldots\ldots = ____ \leq 1.00$$

STORY NO.	DESCRIPTION AND USE	(A) BLDG AREA PER STORY (ACTUAL)	(B) TABLE 506.2[1] AREA	(C) AREA FOR FRONTAGE INCREASE[1,4]	(D) ALLOWABLE AREA OR UNLIMITED[2,3]
ONE	U	1,509	8,500	8,500	8,500

1 Frontage area increases from Section 506.2 are computed thus:
a. Perimeter which fronts a public way or open space having 20 feet minimum width = ______ (F)
b. Total Building Perimeter = ______ (P)
c. Ratio (F/P) = ______ (F/P)
d. W = Minimum width of public way = ______ (W)

2 Unlimited area applicable under conditions of Section 507.
3 Maximum Building Area = total number of stories in the building x D (maximum 3 stories) (506.2).
4 The maximum area of open parking garages must comply with 406.5.4. The maximum area of the air traffic control towers must comply with 412.3.1.
5 Frontage increase is based on the unsprinklered area value in Table 506.2.

ALLOWABLE HEIGHT

	ALLOWABLE	SHOWN ON PLANS	CODE REFERENCE[1]
Building Height in Feet (Table 504.3)	55	22'	--
Building Height in Stories (Table 504.4)	4	1	--

1 Provide code reference if the "Shown on Plans" quantity is not based on Table 504.3 or 504.4

FIRE PROTECTION REQUIREMENTS

BUILDING ELEMENT	FIRE SEPARATION DISTANCE (FEET)	RATING REQ'D	RATING PROVIDED (W/____* REDUCTION)	DETAIL # AND SHEET #	DESIGN # FOR RATED ASSEMBLY	DESIGN # FOR RATED PENETRATION	DESIGN # FOR RATED JOINTS
Structural frame, Including columns, girders, trusses		0	0		N/A	N/A	N/A
Bearing walls		0	0		N/A	N/A	N/A
Exterior		0	0		N/A	N/A	N/A
North		0	0		N/A	N/A	N/A
East		0	0		N/A	N/A	N/A
West		0	0		N/A	N/A	N/A
South		0	0		N/A	N/A	N/A
Interior		N/A	N/A		N/A	N/A	N/A
Nonbearing walls and partitions Exterior							
North	N/A	N/A	N/A		N/A	N/A	N/A
East	N/A	N/A	N/A		N/A	N/A	N/A
West	N/A	N/A	N/A		N/A	N/A	N/A
South	N/A	N/A	N/A		N/A	N/A	N/A
Interior walls and partitions	N/A	N/A	N/A		N/A	N/A	N/A
Floor construction Including supporting beams and joists		0	0		N/A	N/A	N/A
Floor Ceiling Assembly							
Columns Supporting Floors							
Roof construction Including supporting beams and joists		0	0		N/A	N/A	N/A
Roof Ceiling Assembly		N/A	N/A		N/A	N/A	N/A
Columns Supporting Roof		N/A	N/A		N/A	N/A	N/A
Shaft Enclosures- Exit		N/A	N/A		N/A	N/A	N/A
Shaft Enclosures- Other		N/A	N/A		N/A	N/A	N/A
Corridor Separation		N/A	N/A		N/A	N/A	N/A
Occupancy / Fire Barrier Separation		N/A	N/A		N/A	N/A	N/A
Party / Fire Wall Separation		N/A	N/A		N/A	N/A	N/A
Smoke Barrier Separation		N/A	N/A		N/A	N/A	N/A
Tenant / Dwelling Unit / Sleeping Unit Separation		N/A	N/A		N/A	N/A	N/A
Incidental Use Separation		N/A	N/A		N/A	N/A	N/A

* Indicate section number permitting reduction

PERCENTAGE OF WALL OPENING CALCULATIONS

Fire Separation Distance (Feet) From Property Lines	Degree of Openings Protection (Table 705.8)	Allowable Area (%)	Actual Shown on Plans (%)
--	--	--	--
--	--	--	--

LIFE SAFETY SYSTEM REQUIREMENTS

Emergency Lighting: ■ Yes ☐ No
Exit Signs: ■ Yes ☐ No
Fire Alarm: ☐ Yes ■ No
Smoke Detection Systems: ☐ Yes ■ No
Carbon Monoxide Protection: ☐ Yes ■ No

LIFE SAFETY PLAN REQUIREMENTS

Life safety Plan Sheet # BC1.0

☐ Fire and / or smoke rated wall locations (Chapter 7)
☐ Assumed and real property line locations (if not on site plan)
☐ Exterior wall opening area with respect to distance to assumed property lines (705.8)
☐ Occupancy Use for each area as it relates to occupant load calculation (Table 1004.1.2)
☐ Occupants loads for each area
■ Exit access travel distances (1017)
■ Common path of travel distances (Tables 1006.2.1 & 1006.3.2)
☐ Dead end lengths (1020.4)
☐ Clear exit widths for each exit door
☐ Maximum calculated occupant load capacity each exit door can accommodate based on egress width (1005.3)
■ Actual occupant load for each exit door
☐ A seperate schematic plan indicating where fire rated floor/ceiling and/or roof structure is provided for purposes of occupancy separation
☐ Location of doors with panic hardware (1010.1.10)
☐ Location of doors with delayed egress locks and the amount of delay (1010.1.9.7)
☐ Location of doors with electromagnetic egress locks (1010.1.9.9)
☐ Location of doors equipped with hold open devices
☐ Location of emergency escape windows (1030)
☐ The square footage of each fire area (202)
☐ The square footage of each smoke compartment for Occupancy Classification I-2 (407.5)
☐ Note any code exceptions or table notes that may have been utilized regarding the items above

ACCESSIBLE DWELLING UNITS
(SECTION 1107)

TOTAL UNITS	ACCESSIBLE UNITS REQUIRED	ACCESSIBLE UNITS PROVIDED	TYPE A UNITS REQUIRED	TYPE A UNITS PROVIDED	TYPE B UNITS REQUIRED	TYPE B UNITS PROVIDED	TOTAL ACCESSIBLE UNITS PROVIDED
NA	.	.	.	.	.	.	.

ACCESSIBLE PARKING
(SECTION 1106)

LOT OR PARKING AREA	TOTAL # OF PARKING SPACES REQUIRED	TOTAL # OF PARKING SPACES PROVIDED	# OF ACCESSIBLE SPACES PROVIDED: REGULAR WITH 5' ACCESS AISLE	VAN SPACES WITH 132" ACCESS AISLE	VAN SPACES WITH 8' ACCESS AISLE	TOTAL # ACCESSIBLE PROVIDED
	-					
	-					
TOTAL	*					

* - THIS BUILDING DOES NOT REQUIRE PARKING

PLUMBING FIXTURE REQUIREMENTS
(TABLE 2902.1)

USE		WATERCLOSETS MALE	WATERCLOSETS FEMALE	WATERCLOSETS UNISEX	URINALS	LAVATORIES MALE	LAVATORIES FEMALE	LAVATORIES UNISEX	SHOWERS/ TUBS	DRINKING FOUNTAINS REGULAR	DRINKING FOUNTAINS ACCESSIBLE
SPACE	EXIST'G										
	NEW	N/A	N/A	N/A	N/A	N/A	N/A	N/A	N/A	N/A	N/A
	REQUIRED	--									

SPECIAL APPROVALS

Special approval: (Local Jurisdiction, Department of Insurance, OSC, DPI, DHHS, etc., describe below)

STRUCTURAL DESIGN
(REFER TO STRUCTURAL DRAWINGS FOR COMPLIANCE INFORMATION)

DESIGN LOADS:
Importance Factors: Wind (I_W) ____ Snow (I_S) ____ Seismic (I_E) ____
Live Loads: Roof ____ psf Mezzanine ____ psf Floor ____ psf
Ground Snow Loads: ____ psf
Wind Loads: Basic Wind Speed ____ mph (ASCE-7) Exposure Category ____

SEISMIC DESIGN CATEGORY ☐ A ☐ B ☐ C ☐ D
Provide the following Seismic Design Parameters:
Occupancy Category (Table 1604.5) ☐ I ☐ II ☐ III ☐ IV
Spectral Response Acceleration S_S____%g S_1____%g
Site Classification (ASCE 7) ☐ A ☐ B ☐ C ☐ D ☐ E ☐ F
Data Source: ☐ Field Test ☐ Presumptive ☐ Historical Data
Basic structural system (check one)
☐ Bearing Wall ☐ Dual w/Special Moment Frame
☐ Building Frame ☐ Dual w/Intermediate R/C or Special Steel
☐ Moment Frame ☐ Inverted Pendulum
Analysis Procedure ☐ Simplified ☐ Equivalent Lateral Force ☐ Dynamic
Architectural, Mechanical, Components anchored? ☐ Yes ☐ No

LATERAL DESIGN CONTROL: Earthquake ☐ Wind ☐

SOIL BEARING CAPACITIES:
Field Test (provide copy of test report) ____ psf
Presumptive Bearing capacity ____ psf
Pile size, type, and capacity ____

MECHANICAL SUMMARY
(REFER TO MECHANICAL DRAWINGS FOR COMPLIANCE INFORMATION)

ELECTRICAL SUMMARY
(REFER TO ELECTRICAL DRAWINGS FOR COMPLIANCE INFORMATION)

ENERGY SUMMARY
(N/A - THIS BUILDING IS NOT REGULARLY OCCUPIED)

CBSA Architects
Architecture • Planning • Interior Design
www.cbsa-architects.com
post office box 1239
226 second street nw
hickory, north carolina 28601
phone (828) 322-3403
fax (828) 322-1802
email cbsa@cbsa-architects.com

WK DICKSON
community infrastructure consultants
616 COLONNADE DRIVE
CHARLOTTE, NC 28205
(t)704-334-5348
(f)704-334-0078
WWW.WKDICKSON.COM
NC LICENSE NO.F-0374

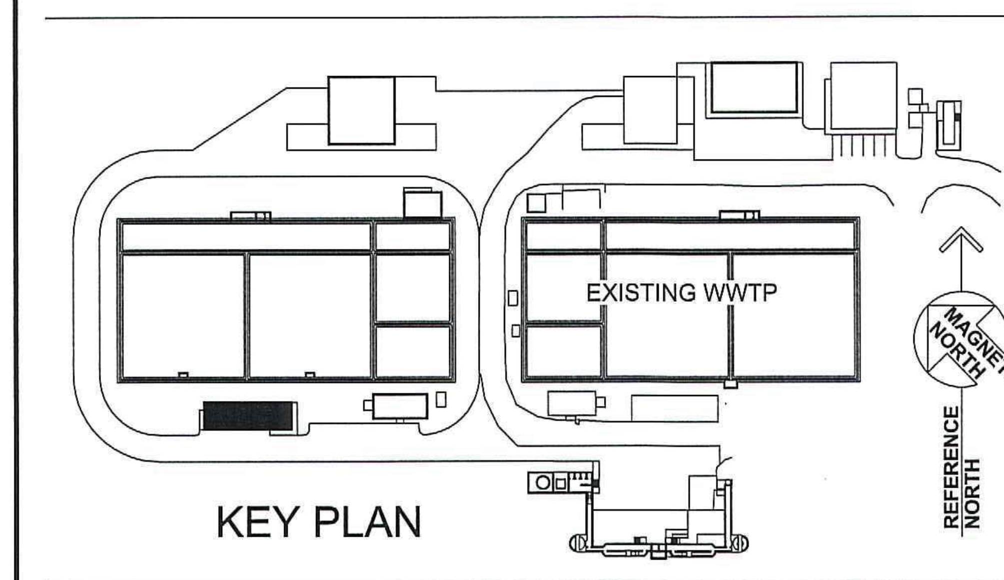

KEY PLAN

JOHN STEVEN WALKER REGISTERED ARCHITECT 4814 NORTH CAROLINA HICKORY, N.C.
11/8/2018
PROFESSIONAL SEAL

REVISION RECORD

NO.	DATE	DESCRIPTION	BY

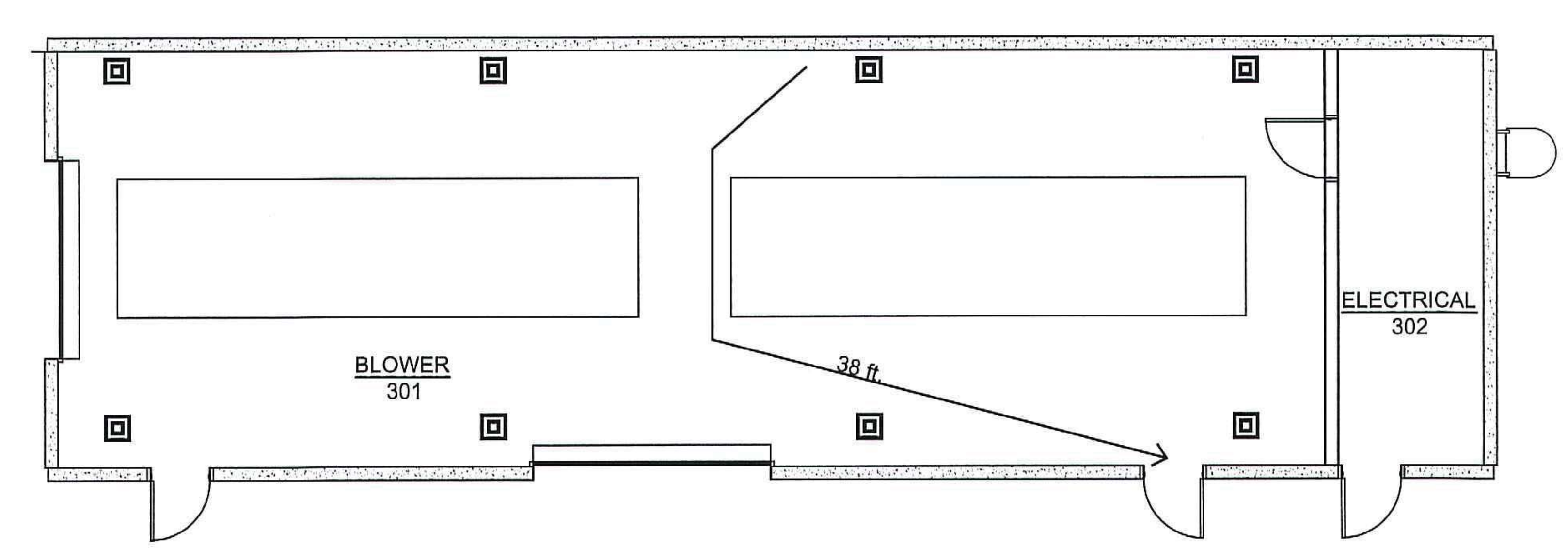

LIFE SAFETY PLAN
SCALE: 1/8" = 1'-0"

FINAL DRAWINGS - - NOT RELEASED FOR CONSTRUCTION

PROJECT NAME: KILLIAN CREEK WWTP PHASE 3 UPGRADE
DRAWING TITLE: APPENDIX B - BLOWER BUILDING #3

PROJ. MGR.: CRF
DESIGN BY: CRF
DRAWN BY:
PROJ. DATE: 11-5-2018
DRAWING NUMBER: 3.A-A.1
WKD PROJ. NO.: 20170294.00.CL

COPYRIGHT © W.K. DICKSON & CO., INC. ALL RIGHTS RESERVED. REPRODUCTION OR USE OF THIS CONTENTS OF THIS DOCUMENT, ADDITIONS OR ALTERATIONS TO THIS DOCUMENT WITHOUT WRITTEN PERMISSION OF W.K. DICKSON & CO., INC. IS PROHIBITED. ALTERATIONS TO THIS DOCUMENT, ADDITIONS OR FROM THE ORIGINAL OF THIS DOCUMENT, MARKED WITH AN ORIGINAL SIGNATURE AND SEAL SHALL BE CONSIDERED TO BE VALID, TRUE COPIES.

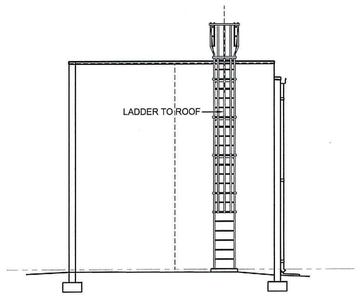

9 ELEVATION
3.A-A.2 SCALE: 1/8" = 1'- 0"

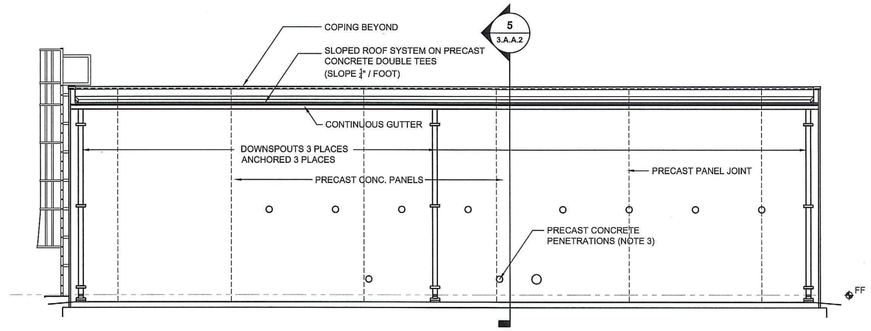

8 ELEVATION
3.A-A.2 SCALE: 1/8" = 1'- 0"

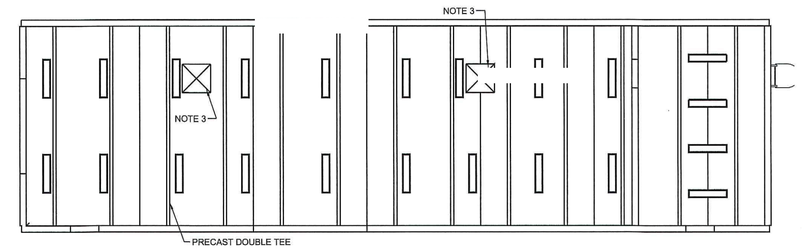

3 REFLECTED CEILING PLAN
3.A-A.2 SCALE: 1/8" = 1'- 0"

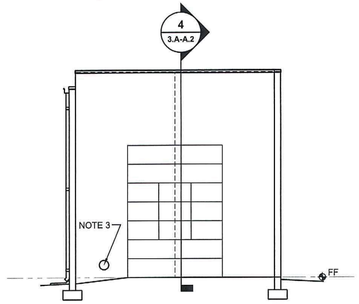

7 ELEVATION
3.A-A.2 SCALE: 1/8" = 1'- 0"

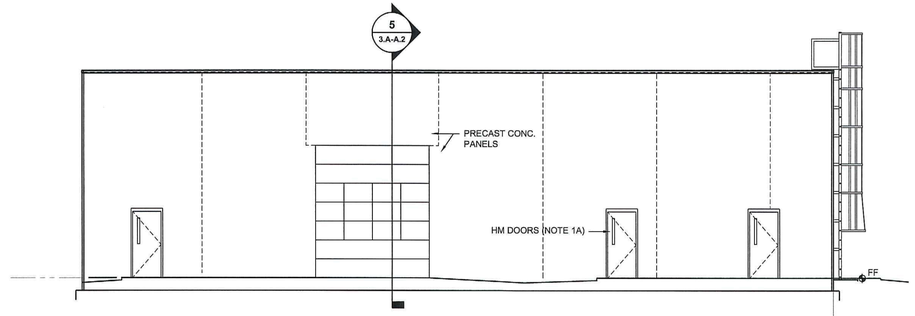

6 ELEVATION
3.A-A.2 SCALE: 1/8" = 1'- 0"

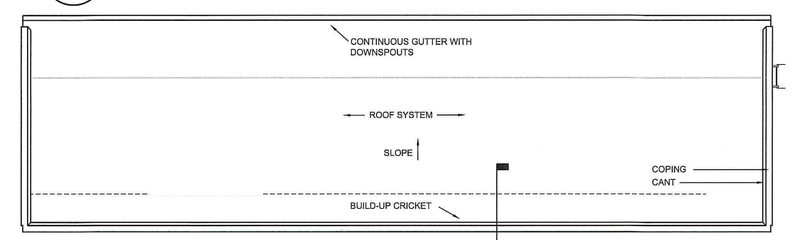

2 ROOF PLAN
3.A-A.2 SCALE: 1/8" = 1'- 0"

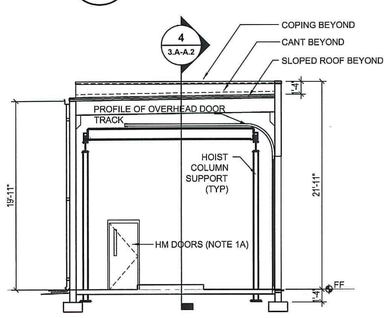

5 SECTION
3.A-A.2 SCALE: 1/8" = 1'- 0"

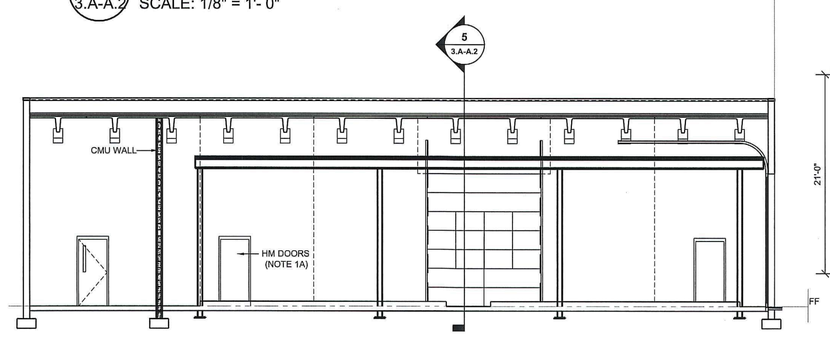

4 SECTION
3.A-A.2 SCALE: 1/8" = 1'- 0"

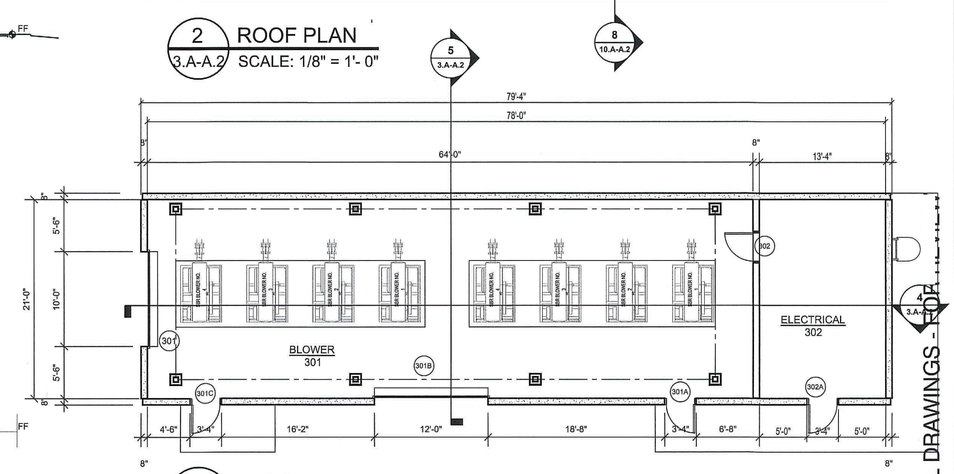

1 FLOOR PLAN
3.A-A.2 SCALE: 1/8" = 1'- 0"

NOTES

1 - BUILDINGS #2, 3, 4, 5, 6 ARE SIMILAR IN CONSTRUCTION AND DETAILS. TYPICAL INFORMATION IS SHOWN ON COMMON INFORMATION (SECTION 7 OF THESE DRAWINGS) INCLUDING:

A - DOOR SCHEDULE
B - BUILDING TYPICAL DETAILS
C - TOILET ACCESSORIES

2 - BUILDINGS #3, 4, 5, 6 ARE HOUSINGS FOR PROCESS EQUIPMENT AND PRICING, WHICH IS SHOWN "GHOSTED" ON ARCHITECTURAL DRAWINGS, AND IS DEFINED IN MORE DETAIL ON "G" SERIES DRAWINGS WHICH WILL GOVERN THE FOLLOWING ITEMS:

A - EQUIPMENT LAYOUT AND MOUNTING PADS
B - FLOOR CAPACITY
C - FLOOR AND WALL PENETRATIONS
D - FLOOR DRAINS, PITS, GRATES, SLOPES

OTHER DRAWINGS (S, P, M, E) ARE ALSO BASED UPON "G" SERIES DRAWINGS.

3 - PRECAST CONCRETE PENETRATIONS (4" O/C OR GREATER) ARE TO BE FACTORY CAST. SIZES AND LOCATIONS SHOWN ON DRAWINGS ARE FOR BID PURPOSES, AND ARE SUBJECT tO CHANGE IN SHOP DRAWING REVIEW AND COORDINATION OF OTHER PROJECT SYSTEMS.

SMALLER PRECAST CONCRETE PENETRATIONS ARE TO BE FIELD LOCATED BY THE GENERAL CONTRACTOR AND CORE-DRILLED BY THE PRECAST CONCRETE MANUFACTURER.

ALL PRECAST CONCRETE PENETRATIONS ARE TO BE WATER-TIGHT BY THE CONTRACTOR OR SUBCONTRACTORS WHOSE SYSTEM REQUIRES THE OPENING.

4 - ALL CAULKING FOR PRECAST CONCRETE JOINTS (PRECAST CONCRETE/PRECAST CONCRETE AND PRECAST CONCRETE/CAST-IN-PLACE CONCRETE) IS TO BE BY PRECAST MANUFACTURER/INSTALLER. CAULKING AROUND PENETRATIONS FOR DOORS, FANS, LOUVERS, VENTS, AND PROCESS PIPING IS TO BE BY INSTALL

5 - FINISH FLOOR ELEVATIONS ARE SHOWN IN SITE DRAWINGS. POURED APPROACHES TO EACH BUILDING ARE TO MEET FINISH FLOOR ELEVATION AT DOORS AND SLOPE 1/4"/FOOT AWAY FROM BUILDING FOR FIRST 5'-0".

CBSA Architects
Architecture • Planning • Interior Design
www.cbsa-architects.com

post office box 1239
226 second street nw
hickory, north carolina 28601

phone (828) 322-3403
fax (828) 322-1802
email cbsa@cbsa-architects.com
2017.016

WK DICKSON
community infrastructure consultants
616 COLONNADE DRIVE
CHARLOTTE, NC 28205
(t)704-334-5348
(f)704-334-0078
WWW.WKDICKSON.COM
NC LICENSE NO.F-0374

JOHN STEVEN WALKER
REGISTERED ARCHITECT
4814
NORTH CAROLINA
HICKORY, N.C.
11/8/2018
PROFESSIONAL SEAL

NO.	DATE	DESCRIPTION	BY

REVISION RECORD

FINAL DRAWINGS - NOT FOR CONSTRUCTION

PROJECT NAME: KILLIAN CREEK WWTP PHASE 3 UPGRADE

DRAWING TITLE: BLOWER BUILDING PHASE 3 BUILDING #3.A

PROJ. MGR.:	CRF
DESIGN BY:	CRF
DRAWN BY:	–
PROJ. DATE:	11-5-2018

DRAWING NUMBER: 3.A-A.2

WKD PROJ. NO.: 20170294.00.CL

COPYRIGHT ©, W.K. DICKSON & CO., INC. ALL RIGHTS RESERVED. REPRODUCTION OR USE OF THE CONTENTS OF THIS DOCUMENT, ADDITIONS OR DELETIONS TO THIS DOCUMENT, IN WHOLE OR IN PART, WITHOUT WRITTEN CONSENT OF W.K. DICKSON & CO., INC., IS PROHIBITED. ONLY COPIES FROM THE ORIGINAL OF THIS DOCUMENT, MARKED WITH AN ORIGINAL SIGNATURE AND SEAL SHALL BE CONSIDERED TO BE VALID, TRUE COPIES.

2018 APPENDIX B
BUILDING CODE SUMMARY
FOR ALL COMMERCIAL PROJECTS
(Except 1 and 2 - Family Dwellings and Townhouses)

Name of Project: KILLIAN CREEK WASTEWATER TREATMENT PLANT - SLUDGE PUMP BUILDING
Address: 6769 OLD PLANK ROAD, STANLEY, N.C. Zip Code 28164
Proposed Use: WASTEWATER TREATMENT
Owner or Authorized Agent: DON CHAMBLEE Phone: - Email -
Owned By: ■ City/County ☐ Private ☐ State
Code Enforcement Jurisdiction: ☐ City - ■ County LINCOLN ☐ State

CONTACT

DESIGNER	FIRM	NAME	LICENSE #	TELEPHONE #	EMAIL
Architectural	CBSA ARCHITECTS	J. STEVEN WALKER	4814	828 332-3403	cbsa@cbsa-architects.com
Civil	W.K. DICKSON	CHARLES R FRONEBERGER	8802	704 334-5348	
Electrical	BRITTAIN ENGINEERING	DONALD R. BRITTAIN, PE	7883	828-328-1813	
Fire Alarm	BRITTAIN ENGINEERING	DONALD R. BRITTAIN, PE	7883	828-328-1813	
Plumbing	BRITTAIN ENGINEERING	DONALD R. BRITTAIN, PE	7883	828-328-1813	
Mechanical	BRITTAIN ENGINEERING	DONALD R. BRITTAIN, PE	7883	828-328-1813	
Sprinkler-Standpipe		N/A	N/A	N/A	
Structural	STEWART ENGINEERING	MICHAEL A. GARDINA, PE	024096	704-334-725	
Retaining Wall >5' High	N/A	N/A			
Other					

2018 NC BUILDING CODE: ■ New Building ☐ Shell / Core ☐ 1st Time Interior Completions
☐ Addition ☐ Phased Construction - Shell Core

2018 NC EXISTING BUILDING CODE: (check all that apply) ☐ Prescriptive ☐ Repair ☐ Chapter 14 ☐ Alteration Level I ☐ Alteration Level II ☐ Alteration Level III ☐ Historic Property ☐ Change of Use

CONSTRUCTED: (Date) -- CURRENT OCCUPANCY(S) (CH. 3) --
RENOVATED: (Date) -- PROPOSED OCCUPANCY(S) (CH. 3) --

OCCUPANCY CATEGORY (Table 1604.5): Current: -- Proposed: --

BASIC BUILDING DATA:
Construction Type: (check all that apply) ☐ I-A ☐ I-B ☐ II-A ■ II-B ☐ III-A ☐ III-B ☐ IV ☐ V-A ☐ V-B
Sprinklers ■ No ☐ Partial ☐ Yes ☐ NFPA 13 ☐ NFPA 13R ☐ NFPA 13D
Standpipes: ■ No ☐ Yes Class ☐ I ☐ II ☐ III ☐ Wet ☐ Dry
Primary Fire District: ■ No ☐ Yes Flood Hazard Area: ☐ No ☐ Yes
Special Inspections Required: ☐ No ☐ Yes

GROSS BUILDING AREA TABLE

Floor	Existing (SQ FT)	New (SQ FT)	Sub-Total
3rd Floor			
2nd Floor			
Mezzanine			
1st Floor	--	660	660
Basement			
TOTAL	--	--	660

ALLOWABLE AREA

Primary Occupancy Classification(s):
Assembly ☐ A-1 ☐ A-2 ☐ A-3 ☐ A-4 ☐ A-5
Business ☐
Educational ☐
Factory ☐ F-1 Moderate ☐ F-2 Low
Hazardous ☐ H-1 Detonate ☐ H-2 Deflagrate ☐ H-3 Combust ☐ H-4 Health ☐ H-5 HPM
Institutional ☐ I-1 ☐ I-2 ☐ I-3 ☐ I-4
I-1 Condition ☐ 1 ☐ 2
I-2 Condition ☐ 1 ☐ 2
I-3 Condition ☐ 1 ☐ 2 ☐ 3 ☐ 4 ☐ 5
Mercantile ☐
Residential ☐ R-1 ☐ R-2 ☐ R-3 ☐ R-4
Storage ☐ S-1 Moderate ☐ S-2 Low ☐ High Piled ☐ Parking Garage ☐ Open ☐ Enclosed ☐ Repair Garage
Utility and Miscellaneous ■

Accessory Occupancy Classification(s): ____
Incidental Uses (Table 509): ____
This separation is not exempt as a Non-Separated Use (see exceptions).
Special Uses (Chapter 4 - List Code Sections): ____
Special Provisions (Chapter 5 - List Code Sections): ____
Mixed Occupancy: ■ No ☐ Yes Separation: ___ Hr. Exception: ____

$$\frac{\text{Actual Area of Occupancy A}}{\text{Allowable Area of Occupancy A}} + \frac{\text{Actual Area of Occupancy B}}{\text{Allowable Area of Occupancy B}} \leq 1$$

____ + ____ + ... = ____ ≤ 1.00

STORY NO.	DESCRIPTION AND USE	(A) BLDG AREA PER STORY (ACTUAL)	(B) TABLE 506.2[3] AREA	(C) AREA FOR FRONTAGE INCREASE[1,5]	(D) ALLOWABLE AREA OR UNLIMITED[2,3]
ONE	U	660	8500	8500	8500

1 Frontage area increases from Section 506.2 are computed thus:
a. Perimeter which fronts a public way or open space having 20 feet minimum width = ____ (F)
b. Total Building Perimeter = ____ (P)
c. Ratio (F/P) = ____ (F/P)
d. W = Minimum width of public way = ____ (W)

2 Unlimited area applicable under conditions of Section 507.
3 Maximum Building Area = total number of stories in the building x D (maximum 3 stories) (506.2).
4 The maximum area of open parking garages must comply with 406.5.4. The maximum area of the air traffic control towers must comply with 412.3.1.
5 Frontage increase is based on the unsprinklered area value in Table 506.2.

ALLOWABLE HEIGHT

	ALLOWABLE	SHOWN ON PLANS	CODE REFERENCE[1]
Building Height in Feet (Table 504.3)	55	12'	--
Building Height in Stories (Table 504.4)	2	1	--

1 Provide code reference if the "Shown on Plans" quantity is not based on Table 504.3 or 504.4

FIRE PROTECTION REQUIREMENTS

BUILDING ELEMENT	FIRE SEPARATION DISTANCE (FEET)	RATING REQ'D	RATING PROVIDED (W/ ___ * REDUCTION)	DETAIL # AND SHEET #	DESIGN # FOR RATED ASSEMBLY	DESIGN # FOR RATED PENETRATION	DESIGN # FOR RATED JOINTS
Structural frame, including columns, girders, trusses		0	0		N/A	N/A	N/A
Bearing walls		0	0		N/A	N/A	N/A
Exterior		0	0		N/A	N/A	N/A
North		0	0		N/A	N/A	N/A
East		0	0		N/A	N/A	N/A
West		0	0		N/A	N/A	N/A
South		0	0		N/A	N/A	N/A
Interior		N/A	N/A		N/A	N/A	N/A
Nonbearing walls and partitions Exterior							
North	N/A	N/A	N/A		N/A	N/A	N/A
East	N/A	N/A	N/A		N/A	N/A	N/A
West	N/A	N/A	N/A		N/A	N/A	N/A
South	N/A	N/A	N/A		N/A	N/A	N/A
Interior walls and partitions	N/A	N/A	N/A		N/A	N/A	N/A
Floor construction Including supporting beams and joists		0	0		N/A	N/A	N/A
Floor Ceiling Assembly							
Columns Supporting Floors							
Roof construction Including supporting beams and joists		0	0		N/A	N/A	N/A
Roof Ceiling Assembly		N/A	N/A		N/A	N/A	N/A
Columns Supporting Roof		N/A	N/A		N/A	N/A	N/A
Shaft Enclosures- Exit		N/A	N/A		N/A	N/A	N/A
Shaft Enclosures- Other		N/A	N/A		N/A	N/A	N/A
Corridor Separation		N/A	N/A		N/A	N/A	N/A
Occupancy / Fire Barrier Separation		N/A	N/A		N/A	N/A	N/A
Party / Fire Wall Separation		N/A	N/A		N/A	N/A	N/A
Smoke Barrier Separation		N/A	N/A		N/A	N/A	N/A
Tenant / Dwelling Unit / Sleeping Unit Separation		N/A	N/A		N/A	N/A	N/A
Incidental Use Separation		N/A	N/A		N/A	N/A	N/A

* Indicate section number permitting reduction

PERCENTAGE OF WALL OPENING CALCULATIONS

Fire Separation Distance (Feet) From Property Lines	Degree of Openings Protection (Table 705.8)	Allowable Area (%)	Actual Shown on Plans (%)
--	--	--	--
--	--	--	--

LIFE SAFETY SYSTEM REQUIREMENTS

Emergency Lighting: ■ Yes ☐ No
Exit Signs: ■ Yes ☐ No
Fire Alarm: ☐ Yes ■ No
Smoke Detection Systems: ☐ Yes ■ No
Carbon Monoxide Protection: ☐ Yes ■ No

LIFE SAFETY PLAN REQUIREMENTS

Life safety Plan Sheet # BC1.1

- ☐ Fire and / or smoke rated wall locations (Chapter 7)
- ☐ Assumed and real property line locations (if not on site plan)
- ☐ Exterior wall opening area with respect to distance to assumed property lines (705.8)
- ☐ Occupancy Use for each area as it relates to occupant load calculation (Table 1004.1.2)
- ☐ Occupants loads for each area
- ■ Exit access travel distances (1017)
- ■ Common path of travel distances (Tables 1006.2.1 & 1006.3.2)
- ☐ Dead end lengths (1020.4)
- ☐ Clear exit widths for each exit door
- ☐ Maximum calculated occupant load capacity each exit door can accommodate based on egress width (1005.3)
- ■ Actual occupant load for each exit door
- ☐ A seperate schematic plan indicating where fire rated floor/ceiling and/or roof structure is provided for purposes of occupancy separation
- ☐ Location of doors with panic hardware (1010.1.10)
- ☐ Location of doors with delayed egress locks and the amount of delay (1010.1.9.7)
- ☐ Location of doors with electromagnetic egress locks (1010.1.9.9)
- ☐ Location of doors equipped with hold open devices
- ☐ Location of emergency escape windows (1030)
- ☐ The square footage of each fire area (202)
- ☐ The square footage of each smoke compartment for Occupancy Classification I-2 (407.5)
- ☐ Note any code exceptions or table notes that may have been utilized regarding the items above

ACCESSIBLE DWELLING UNITS
(SECTION 1107)

TOTAL UNITS	ACCESSIBLE UNITS REQUIRED	ACCESSIBLE UNITS PROVIDED	TYPE A UNITS REQUIRED	TYPE A UNITS PROVIDED	TYPE B UNITS REQUIRED	TYPE B UNITS PROVIDED	TOTAL ACCESSIBLE UNITS PROVIDED
NA	.	.	.	.	.	.	.

ACCESSIBLE PARKING
(SECTION 1106)

LOT OR PARKING AREA	TOTAL # OF PARKING SPACES REQUIRED	TOTAL # OF PARKING SPACES PROVIDED	# OF ACCESSIBLE SPACES PROVIDED: REGULAR WITH 5' ACCESS AISLE	VAN SPACES WITH 132" ACCESS AISLE	VAN SPACES WITH 8' ACCESS AISLE	TOTAL # ACCESSIBLE PROVIDED
	-					
	-					
TOTAL	*					

* - THIS BUILDING DOES NOT REQUIRE PARKING

PLUMBING FIXTURE REQUIREMENTS
(TABLE 2902.1)

USE		WATERCLOSETS MALE	WATERCLOSETS FEMALE	WATERCLOSETS UNISEX	URINALS	LAVATORIES MALE	LAVATORIES FEMALE	LAVATORIES UNISEX	SHOWERS/ TUBS	DRINKING FOUNTAINS REGULAR	DRINKING FOUNTAINS ACCESSIBLE
SPACE	EXIST'G										
	NEW	N/A	N/A	N/A	N/A	N/A	N/A	N/A	N/A	N/A	N/A
	REQUIRED	--									

SPECIAL APPROVALS

Special approval: (Local Jurisdiction, Department of Insurance, OSC, DPI, DHHS, etc., describe below)

STRUCTURAL DESIGN
(REFER TO STRUCTURAL DRAWINGS FOR COMPLIANCE INFORMATION)

DESIGN LOADS:
Importance Factors: Wind (I_W) ____ Snow (I_S) ____ Seismic (I_E) ____
Live Loads: Roof ____ psf Mezzanine ____ psf Floor ____ psf
Ground Snow Loads: ____ psf
Wind Loads: Basic Wind Speed ____ mph (ASCE-7) Exposure Category ____

SEISMIC DESIGN CATEGORY ☐ A ☐ B ☐ C ☐ D
Provide the following Seismic Design Parameters:
Occupancy Category (Table 1604.5) ☐ I ☐ II ☐ III ☐ IV
Spectral Response Acceleration S_S____%g S_1____%g
Site Classification (ASCE 7) ☐ A ☐ B ☐ C ☐ D ☐ E ☐ F
Data Source: ☐ Field Test ☐ Presumptive ☐ Historical Data
Basic structural system (check one) ☐ Bearing Wall ☐ Building Frame ☐ Moment Frame ☐ Dual w/Special Moment Frame ☐ Dual w/Intermediate R/C or Special Steel ☐ Inverted Pendulum
Analysis Procedure ☐ Simplified ☐ Equivalent Lateral Force ☐ Dynamic
Architectural, Mechanical, Components anchored? ☐ Yes ☐ No
LATERAL DESIGN CONTROL: Earthquake ☐ Wind ☐
SOIL BEARING CAPACITIES:
Field Test (provide copy of test report) ____ psf
Presumptive Bearing capacity ____ psf
Pile size, type, and capacity ____

MECHANICAL SUMMARY
(REFER TO MECHANICAL DRAWINGS FOR COMPLIANCE INFORMATION)

ELECTRICAL SUMMARY
(REFER TO ELECTRICAL DRAWINGS FOR COMPLIANCE INFORMATION)

ENERGY SUMMARY
(N/A - THIS BUILDING IS NOT REGULARLY OCCUPIED)

CBSA Architects
Architecture • Planning • Interior Design
www.cbsa-architects.com
post office box 1239
226 second street nw
hickory, north carolina 28601
phone (828) 322-3403
fax (828) 322-1802
email cbsa@cbsa-architects.com

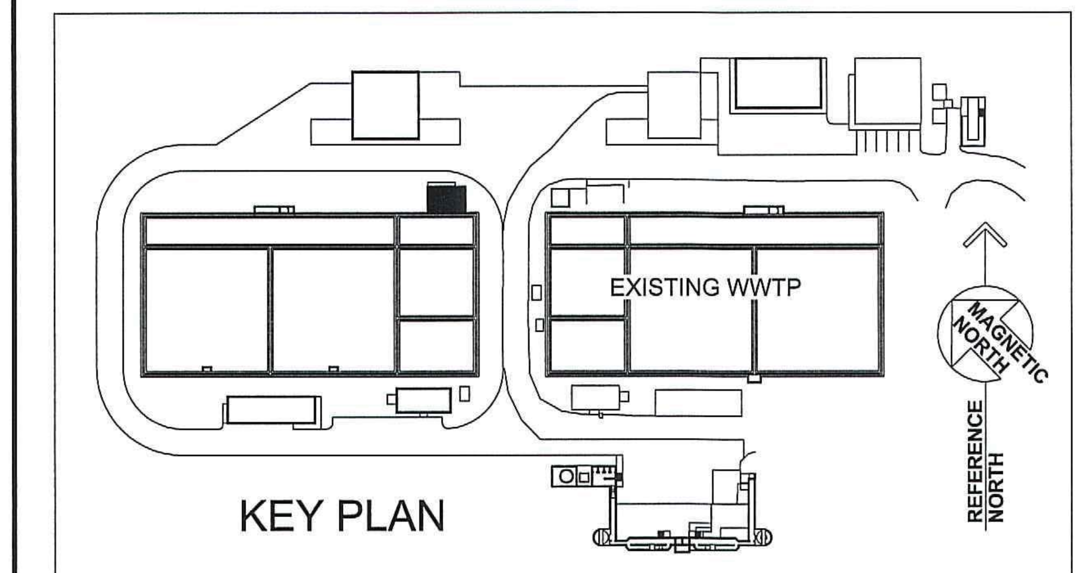

KEY PLAN

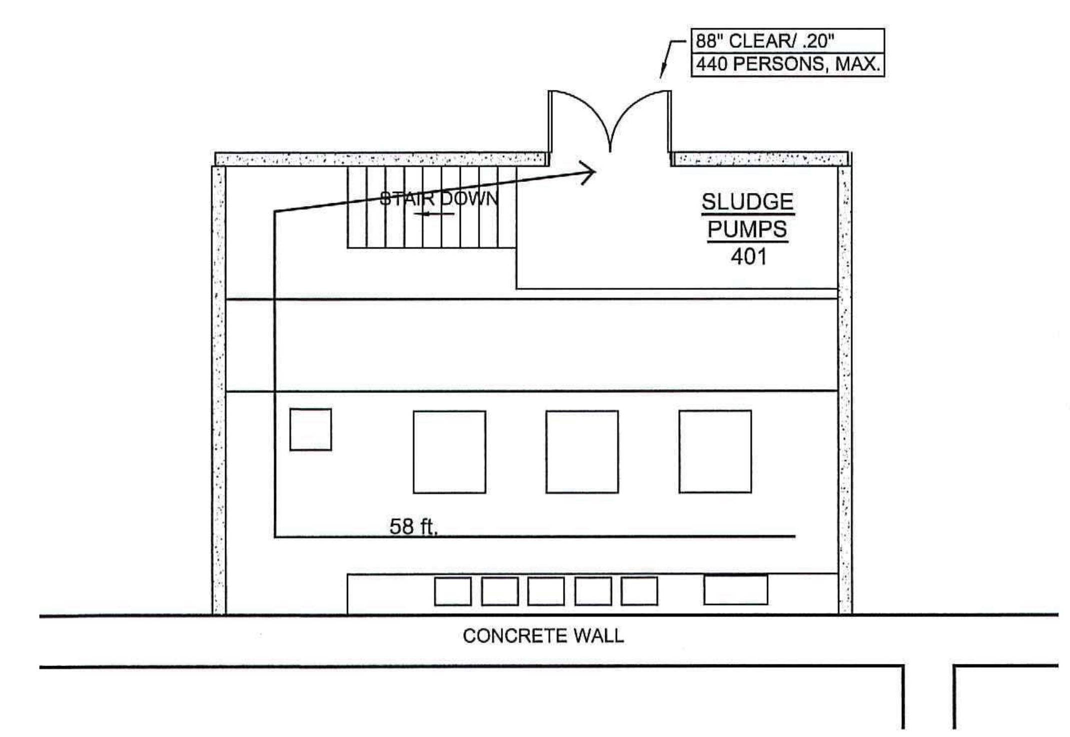

LIFE SAFETY PLAN
SCALE: 1/8" = 1'-0"

FINAL DRAWINGS - NOT RELEASED FOR CONSTRUCTION

WK DICKSON
community infrastructure consultants
616 COLONNADE DRIVE
CHARLOTTE, NC 28205
(t)704-334-5348
(f)704-334-0078
WWW.WKDICKSON.COM
NC LICENSE NO.F-0374

JOHN STEVEN WALKER REGISTERED ARCHITECT 4814 NORTH CAROLINA HICKORY, N.C. 11/8/2018
PROFESSIONAL SEAL

REVISION RECORD

NO.	DATE	DESCRIPTION	BY

PROJECT NAME: KILLIAN CREEK WWTP PHASE 3 UPGRADE
DRAWING TITLE: APPENDIX B - SLUDGE PUMP BUILDING 4

PROJ. MGR.: CRF
DESIGN BY: CRF
DRAWN BY:
PROJ. DATE: 11-5-2018
DRAWING NUMBER: 4.A-A.1
WKD PROJ. NO.: 20170294.00.CL

COPYRIGHT: © WK DICKSON & CO., INC. ALL RIGHTS RESERVED. REPRODUCTION OR USE OF THE CONTENTS OF THIS DOCUMENT, ADDENDA OR REPORTS IN WHOLE OR IN PART WITHOUT WRITTEN PERMISSION OF WK DICKSON & CO., INC. IS PROHIBITED. ONLY COPIES FROM THE ORIGINAL OF THIS DOCUMENT MARKED WITH AN ORIGINAL SIGNATURE AND SEAL OF WK DICKSON & CO., INC. IS TO BE CONSIDERED VALID COPIES.

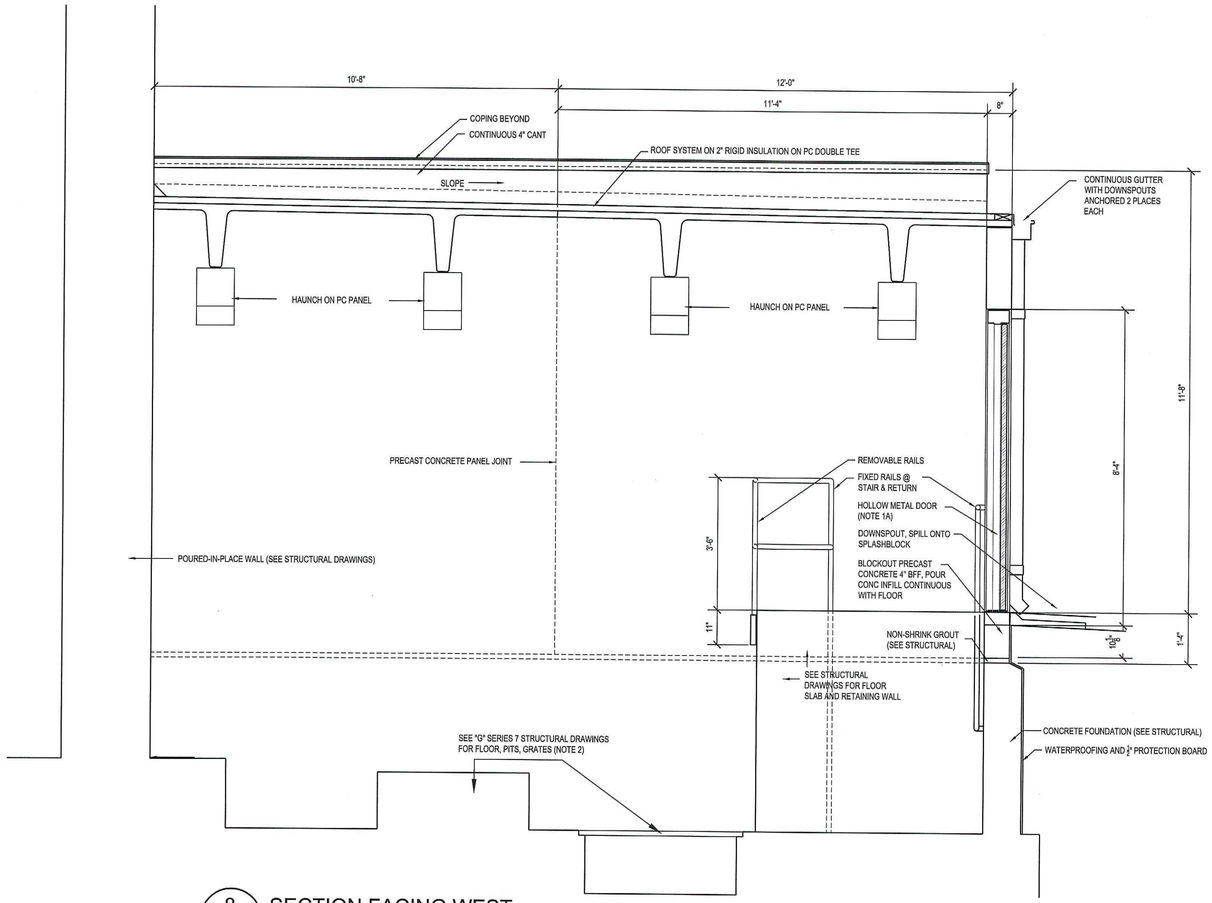

8 / 4.A-A.2 SECTION FACING WEST
SCALE: 1/2" = 1'- 0"

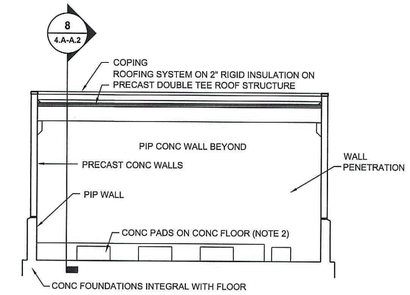

7 / 4.A-A.2 SECTION
SCALE: 1/8" = 1'- 0"

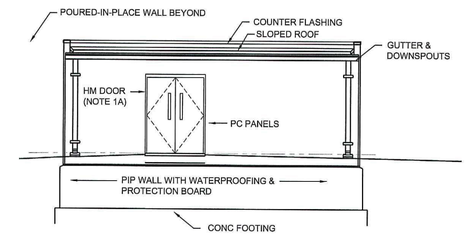

6 / 4.A-A.2 ELEVATION
SCALE: 1/8" = 1'- 0"

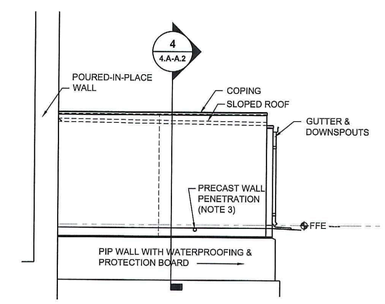

5 / 4.A-A.2 ELEVATION
SCALE: 1/8" = 1'- 0"

CBSA Architects
Architecture • Planning • Interior Design
www.cbsa-architects.com

post office box 1239
226 second street nw
hickory, north carolina 28601

phone (828) 322-3403
fax (828) 322-1802
email cbsa@cbsa-architects.com
2017.016

NOTES

1 - BUILDINGS #2, 3, 4, 5, 6 ARE SIMILAR IN CONSTRUCTION AND DETAILS. TYPICAL INFORMATION IS SHOWN ON COMMON INFORMATION (SECTION 7 OF THESE DRAWINGS) INCLUDING:

A - DOOR SCHEDULE
B - BUILDING TYPICAL DETAILS
C - TOILET ACCESSORIES

2 - BUILDINGS #3, 4, 5, 6 ARE HOUSINGS FOR PROCESS EQUIPMENT AND PRICING, WHICH IS SHOWN "GHOSTED" ON ARCHITECTURAL DRAWINGS, AND IS DEFINED IN MORE DETAIL ON "G" SERIES DRAWINGS WHICH WILL GOVERN THE FOLLOWING ITEMS:

A - EQUIPMENT LAYOUT AND MOUNTING PADS
B - FLOOR CAPACITY
C - FLOOR AND WALL PENETRATIONS
D - FLOOR DRAINS, PITS, GRATES, SLOPES

OTHER DRAWINGS (S, P, M, E) ARE ALSO BASED UPON "G" SERIES DRAWINGS.

3 - PRECAST CONCRETE PENETRATIONS (4" O/C OR GREATER) ARE TO BE FACTORY CAST. SIZES AND LOCATIONS SHOWN ON DRAWINGS ARE FOR BID PURPOSES, AND ARE SUBJECT TO CHANGE IN SHOP DRAWING REVIEW AND COORDINATION OF OTHER PROJECT SYSTEMS.

SMALLER PRECAST CONCRETE PENETRATIONS ARE TO BE FIELD LOCATED BY THE GENERAL CONTRACTOR AND CORE-DRILLED BY THE PRECAST CONCRETE MANUFACTURER.

ALL PRECAST CONCRETE PENETRATIONS ARE TO BE WATER-TIGHT BY THE CONTRACTOR OR SUBCONTRACTORS WHOSE SYSTEM REQUIRES THE OPENING.

4 - ALL CAULKING FOR PRECAST CONCRETE JOINTS (PRECAST CONCRETE/PRECAST CONCRETE AND PRECAST CONCRETE/CAST-IN-PLACE CONCRETE) IS TO BE BY PRECAST MANUFACTURER/INSTALLER. CAULKING AROUND PENETRATIONS FOR DOORS, FANS, LOUVERS, VENTS, AND PROCESS PIPING IS TO BE BY INSTALLER OF THESE SYSTEMS.

5 - FINISH FLOOR ELEVATIONS ARE SHOWN IN SITE DRAWINGS. POURED APPROACHES TO EACH BUILDING ARE TO MEET FINISH FLOOR ELEVATION AT DOORS AND SLOPE 1/4"/FOOT AWAY FROM BUILDING FOR FIRST 5'-0".

6 - STAIR PAN CONSTRUCTION IS 14 GAUGE STEEL BENT PLATE SUPPORT ON 1-1/4" X 1-1/4" X 1/8" SHELF ANGLES. WELD PANS TOGETHER AND FILL WITH 2" CONCRETE. SUPPORT WITH (2) C8X10 STRINGERS. WELD ATTACH HANDRAIL ON ONE SITE, ANCHOR OPPOSITE RAIL TO PRECAST WALL.

7 - REMOVABLE RAIL 1-1/2" O.D. GALVANIZED STEEL SET IN 1/4" X 10" HIGH MOUNTING BRACKETS ATTACHED TO P.I.P. WALL WITH 1/4" X 3" LONG EXPANSION SCREWS. ALL MATERIALS TO BE GALVANIZED.

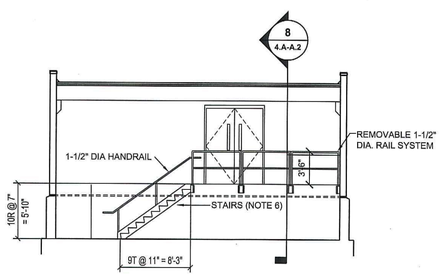

4 / 4.A-A.2 SECTION
SCALE: 1/8" = 1'- 0"

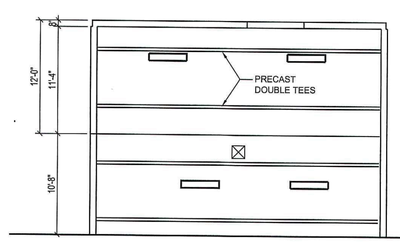

3 / 4.A-A.2 REFLECTED CEILING PLAN
SCALE: 1/8" = 1'- 0"

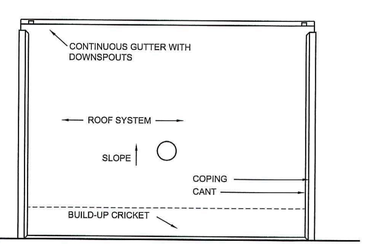

2 / 4.A-A.2 ROOF PLAN
SCALE: 1/8" = 1'- 0"

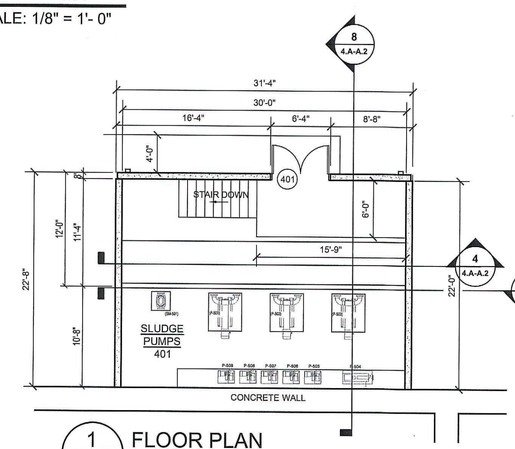

1 / 4.A-A.2 FLOOR PLAN
SCALE: 1/8" = 1'- 0"

- NOT RELEASED FOR CONSTRUCTION -
FINAL DRAWINGS -

WK DICKSON
community infrastructure consultants
616 COLONNADE DRIVE
CHARLOTTE, NC 28205
(t)704-334-5348
(f)704-334-0078
WWW.WKDICKSON.COM
NC LICENSE NO.F-0374

JOHN STEVEN WALKER
REGISTERED ARCHITECT
A814
NORTH CAROLINA
HICKORY, N.C.
11/8/2018
PROFESSIONAL SEAL

NO.	DATE	DESCRIPTION	BY

REVISION RECORD

PROJECT NAME: KILLIAN CREEK WWTP PHASE 3 UPGRADE

DRAWING TITLE: SLUDGE PUMP BUILDING #4.A

PROJ. MGR.:	CRF
DESIGN BY:	CRF
DRAWN BY:	–
PROJ. DATE:	11-5-2018

DRAWING NUMBER: 4.A-A.2

WKD PROJ. NO.: 20170294.00.CL

COPYRIGHT ©, W.K. DICKSON & CO., INC. ALL RIGHTS RESERVED. REPRODUCTION OR USE OF THE CONTENTS OF THIS DOCUMENT; ADDITIONS OR DELETIONS TO THIS DOCUMENT, IN WHOLE OR IN PART, WITHOUT WRITTEN CONSENT OF W.K. DICKSON & CO., INC., IS PROHIBITED. ONLY COPIES FROM THE ORIGINAL OF THIS DOCUMENT, MARKED WITH AN ORIGINAL SIGNATURE AND SEAL SHALL BE CONSIDERED TO BE VALID, TRUE COPIES.

2018 APPENDIX B
BUILDING CODE SUMMARY
FOR ALL COMMERCIAL PROJECTS
(Except 1 and 2 - Family Dwellings and Townhouses)

Name of Project: KILLIAN CREEK WASTEWATER TREATMENT PLANT - SLUDGE DEWATERING BUILDING
Address: 6769 OLD PLANK ROAD, STANLEY, N.C. Zip Code 28164
Proposed Use: WASTEWATER TREATMENT
Owner or Authorized Agent: DON CHAMBLEE Phone: - Email -
Owned By: ■ City/County ☐ Private ☐ State
Code Enforcement Jurisdiction: ☐ City - ■ County LINCOLN ☐ State

CONTACT

DESIGNER	FIRM	NAME	LICENSE #	TELEPHONE #	EMAIL
Architectural	CBSA ARCHITECTS	J. STEVEN WALKER	4814	828 332-3403	cbsa@cbsa-architects.com
Civil	W.K. DICKSON	CHARLES R FRONEBERGER	8802	704 334-5348	
Electrical	BRITTAIN ENGINEERING	DONALD R. BRITTAIN, PE	7883	828-328-1813	
Fire Alarm	BRITTAIN ENGINEERING	DONALD R. BRITTAIN, PE	7883	828-328-1813	
Plumbing	BRITTAIN ENGINEERING	DONALD R. BRITTAIN, PE	7883	828-328-1813	
Mechanical	BRITTAIN ENGINEERING	DONALD R. BRITTAIN, PE	7883	828-328-1813	
Sprinkler-Standpipe	N/A	N/A		N/A	
Structural	STEWART ENGINEERING	MICHAEL A. GARDINA, PE	024096	704-334-725	
Retaining Wall >5' High	N/A	N/A			
Other					

2018 NC BUILDING CODE: ■ New Building ☐ Shell / Core ☐ 1st Time Interior Completions
☐ Addition ☐ Phased Construction - Shell Core

2018 NC EXISTING BUILDING CODE: (check all that apply)
☐ Prescriptive ☐ Repair ☐ Chapter 14
☐ Alteration Level I ☐ Alteration Level II ☐ Alteration Level III
☐ Historic Property ☐ Change of Use

CONSTRUCTED: (Date) -- CURRENT OCCUPANCY(S) (CH. 3) --
RENOVATED: (Date) -- PROPOSED OCCUPANCY(S) (CH. 3) --

OCCUPANCY CATEGORY (Table 1604.5): Current: -- Proposed: --

BASIC BUILDING DATA:
Construction Type: (check all that apply) ☐ I-A ☐ I-B ☐ II-A ■ II-B ☐ III-A ☐ III-B ☐ IV ☐ V-A ☐ V-B
Sprinklers ■ No ☐ Partial ☐ Yes ☐ NFPA 13 ☐ NFPA 13R ☐ NFPA 13D
Standpipes: ■ No ☐ Yes Class ☐ I ☐ II ☐ III ☐ Wet ☐ Dry
Primary Fire District: ■ No ☐ Yes Flood Hazard Area: ☐ No ☐ Yes
Special Inspections Required: ☐ No ☐ Yes

GROSS BUILDING AREA TABLE

Floor	Existing (SQ FT)	New (SQ FT)	Sub-Total
3rd Floor			
2nd Floor			
Mezzanine			
1st Floor	--	2941	2941
Basement			
TOTAL	--	--	2941

ALLOWABLE AREA

Primary Occupancy Classification(s):
Assembly ☐ A-1 ☐ A-2 ☐ A-3 ☐ A-4 ☐ A-5
Business ☐
Educational ☐
Factory ☐ F-1 Moderate ☐ F-2 Low
Hazardous ☐ H-1 Detonate ☐ H-2 Deflagrate ☐ H-3 Combust ☐ H-4 Health ☐ H-5 HPM
Institutional ☐ I-1 ☐ I-2 ☐ I-3 ☐ I-4
I-1 Condition ☐ 1 ☐ 2
I-2 Condition ☐ 1 ☐ 2
I-3 Condition ☐ 1 ☐ 2 ☐ 3 ☐ 4 ☐ 5
Mercantile ☐
Residential ☐ R-1 ☐ R-2 ☐ R-3 ☐ R-4
Storage ☐ S-1 Moderate ☐ S-2 Low ☐ High Piled
☐ Parking Garage ☐ Open ☐ Enclosed ☐ Repair Garage
Utility and Miscellaneous ■

Accessory Occupancy Classification(s): ______
Incidental Uses (Table 509): ______
This separation is not exempt as a Non-Separated Use (see exceptions).
Special Uses (Chapter 4 - List Code Sections): ______
Special Provisions (Chapter 5 - List Code Sections): ______
Mixed Occupancy: ■ No ☐ Yes Separation: ____ Hr. Exception: ______

$$\frac{\text{Actual Area of Occupancy A}}{\text{Allowable Area of Occupancy A}} + \frac{\text{Actual Area of Occupancy B}}{\text{Allowable Area of Occupancy B}} \leq 1$$

______ + ______ + ... = ______ ≤ 1.00

STORY NO.	DESCRIPTION AND USE	(A) BLDG AREA PER STORY (ACTUAL)	(B) TABLE 506.2[1] AREA	(C) AREA FOR FRONTAGE INCREASE[1,5]	(D) ALLOWABLE AREA OR UNLIMITED[2,3]
ONE	U	2941	8500	8500	8500

1 Frontage area increases from Section 506.2 are computed thus:
a. Perimeter which fronts a public way or open space having 20 feet minimum width = ______ (F)
b. Total Building Perimeter = ______ (P)
c. Ratio (F/P) = ______ (F/P)
d. W = Minimum width of public way = ______ (W)

2 Unlimited area applicable under conditions of Section 507.
3 Maximum Building Area = total number of stories in the building x D (maximum 3 stories) (506.2).
4 The maximum area of open parking garages must comply with 406.5.4. The maximum area of the air traffic control towers must comply with 412.3.1.
5 Frontage increase is based on the unsprinklered area value in Table 506.2.

ALLOWABLE HEIGHT

	ALLOWABLE	SHOWN ON PLANS	CODE REFERENCE
Building Height in Feet (Table 504.3)	55	24'	--
Building Height in Stories (Table 504.4)	2	1	--

1 Provide code reference if the "Shown on Plans" quantity is not based on Table 504.3 or 504.4

FIRE PROTECTION REQUIREMENTS

BUILDING ELEMENT	FIRE SEPARATION DISTANCE (FEET)	RATING REQ'D	RATING PROVIDED (W/ ___ * REDUCTION)	DETAIL # AND SHEET #	DESIGN # FOR RATED ASSEMBLY	DESIGN # FOR RATED PENETRATION	DESIGN # FOR RATED JOINTS
Structural frame, including columns, girders, trusses		0	0		N/A	N/A	N/A
Bearing walls		0	0		N/A	N/A	N/A
Exterior		0	0		N/A	N/A	N/A
North		0	0		N/A	N/A	N/A
East		0	0		N/A	N/A	N/A
West		0	0		N/A	N/A	N/A
South		0	0		N/A	N/A	N/A
Interior		N/A	N/A		N/A	N/A	N/A
Nonbearing walls and partitions Exterior							
North	N/A	N/A	N/A		N/A	N/A	N/A
East	N/A	N/A	N/A		N/A	N/A	N/A
West	N/A	N/A	N/A		N/A	N/A	N/A
South	N/A	N/A	N/A		N/A	N/A	N/A
Interior walls and partitions	N/A	N/A	N/A		N/A	N/A	N/A
Floor construction Including supporting beams and joists		0	0		N/A	N/A	N/A
Floor Ceiling Assembly							
Columns Supporting Floors							
Roof construction Including supporting beams and joists		0	0		N/A	N/A	N/A
Roof Ceiling Assembly		N/A	N/A		N/A	N/A	N/A
Columns Supporting Roof		N/A	N/A		N/A	N/A	N/A
Shaft Enclosures- Exit		N/A	N/A		N/A	N/A	N/A
Shaft Enclosures- Other		N/A	N/A		N/A	N/A	N/A
Corridor Separation		N/A	N/A		N/A	N/A	N/A
Occupancy / Fire Barrier Separation		N/A	N/A		N/A	N/A	N/A
Party / Fire Wall Separation		N/A	N/A		N/A	N/A	N/A
Smoke Barrier Separation		N/A	N/A		N/A	N/A	N/A
Tenant / Dwelling Unit / Sleeping Unit Separation		N/A	N/A		N/A	N/A	N/A
Incidental Use Separation		N/A	N/A		N/A	N/A	N/A

* Indicate section number permitting reduction

PERCENTAGE OF WALL OPENING CALCULATIONS

Fire Separation Distance (Feet) From Property Lines	Degree of Openings Protection (Table 705.8)	Allowable Area (%)	Actual Shown on Plans (%)
--	--	--	--
--	--	--	--

LIFE SAFETY SYSTEM REQUIREMENTS

Emergency Lighting: ■ Yes ☐ No
Exit Signs: ■ Yes ☐ No
Fire Alarm: ■ Yes ☐ No
Smoke Detection Systems: ■ Yes ☐ No
Carbon Monoxide Protection: ☐ Yes ■ No

LIFE SAFETY PLAN REQUIREMENTS

Life safety Plan Sheet # BC1.2

- ☐ Fire and / or smoke rated wall locations (Chapter 7)
- ☐ Assumed and real property line locations (if not on site plan)
- ☐ Exterior wall opening area with respect to distance to assumed property lines (705.8)
- ☐ Occupancy Use for each area as it relates to occupant load calculation (Table 1004.1.2)
- ☐ Occupants loads for each area
- ■ Exit access travel distances (1017)
- ■ Common path of travel distances (Tables 1006.2.1 & 1006.3.2)
- ☐ Dead end lengths (1020.4)
- ☐ Clear exit widths for each exit door
- ☐ Maximum calculated occupant load capacity each exit door can accommodate based on egress width (1005.3)
- ■ Actual occupant load for each exit door
- ☐ A seperate schematic plan indicating where fire rated floor/ceiling and/or roof structure is provided for purposes of occupancy separation
- ☐ Location of doors with panic hardware (1010.1.10)
- ☐ Location of doors with delayed egress locks and the amount of delay (1010.1.9.7)
- ☐ Location of doors with electromagnetic egress locks (1010.1.9.9)
- ☐ Location of doors equipped with hold open devices
- ☐ Location of emergency escape windows (1030)
- ☐ The square footage of each fire area (202)
- ☐ The square footage of each smoke compartment for Occupancy Classification I-2 (407.5)
- ☐ Note any code exceptions or table notes that may have been utilized regarding the items above

ACCESSIBLE DWELLING UNITS
(SECTION 1107)

TOTAL UNITS	ACCESSIBLE UNITS REQUIRED	ACCESSIBLE UNITS PROVIDED	TYPE A UNITS REQUIRED	TYPE A UNITS PROVIDED	TYPE B UNITS REQUIRED	TYPE B UNITS PROVIDED	TOTAL ACCESSIBLE UNITS PROVIDED
NA	.	.	.	.	.	.	.

ACCESSIBLE PARKING
(SECTION 1106)

LOT OR PARKING AREA	TOTAL # OF PARKING SPACES REQUIRED	TOTAL # OF PARKING SPACES PROVIDED	# OF ACCESSIBLE SPACES PROVIDED: REGULAR WITH 5' ACCESS AISLE	VAN SPACES WITH 132" ACCESS AISLE	VAN SPACES WITH 8' ACCESS AISLE	TOTAL # ACCESSIBLE PROVIDED
	-					
	-					
TOTAL	-					

PLUMBING FIXTURE REQUIREMENTS
(TABLE 2902.1)

USE		WATERCLOSETS MALE	WATERCLOSETS FEMALE	WATERCLOSETS UNISEX	URINALS	LAVATORIES MALE	LAVATORIES FEMALE	LAVATORIES UNISEX	SHOWERS/ TUBS	DRINKING FOUNTAINS REGULAR	DRINKING FOUNTAINS ACCESSIBLE
SPACE	EXIST'G										
	NEW	(1)/1				(1)/1					
	REQUIRED	--									

SPECIAL APPROVALS

Special approval: (Local Jurisdiction, Department of Insurance, OSC, DPI, DHHS, etc., describe below)

STRUCTURAL DESIGN
(REFER TO STRUCTURAL DRAWINGS FOR COMPLIANCE INFORMATION)

DESIGN LOADS:
Importance Factors: Wind (I_W) ______ Snow (I_S) ______ Seismic (I_E) ______
Live Loads: Roof ______ psf Mezzanine ______ psf Floor ______ psf
Ground Snow Loads: ______ psf
Wind Loads: Basic Wind Speed ______ mph (ASCE-7) Exposure Category ______

SEISMIC DESIGN CATEGORY ☐ A ☐ B ☐ C ☐ D
Provide the following Seismic Design Parameters:
Occupancy Category (Table 1604.5) ☐ I ☐ II ☐ III ☐ IV
Spectral Response Acceleration S_S ______ %g S_1 ______ %g
Site Classification (ASCE 7) ☐ A ☐ B ☐ C ☐ D ☐ E ☐ F
Data Source: ☐ Field Test ☐ Presumptive ☐ Historical Data
Basic structural system (check one)
☐ Bearing Wall ☐ Dual w/Special Moment Frame
☐ Building Frame ☐ Dual w/Intermediate R/C or Special Steel
☐ Moment Frame ☐ Inverted Pendulum
Analysis Procedure ☐ Simplified ☐ Equivalent Lateral Force ☐ Dynamic
Architectural, Mechanical, Components anchored? ☐ Yes ☐ No
LATERAL DESIGN CONTROL: Earthquake ☐ Wind ☐
SOIL BEARING CAPACITIES:
Field Test (provide copy of test report) ______ psf
Presumptive Bearing capacity ______ psf
Pile size, type, and capacity ______

MECHANICAL SUMMARY
(REFER TO MECHANICAL DRAWINGS FOR COMPLIANCE INFORMATION)

ELECTRICAL SUMMARY
(REFER TO ELECTRICAL DRAWINGS FOR COMPLIANCE INFORMATION)

ENERGY SUMMARY

ENERGY REQUIREMENTS

The following data shall be considered minimum and any special attribute required to meet the energy code shall also be provided. Each Designer shall furnish the required portions of the project information for the plan data sheet. If energy cost budget method, state the annual energy cost budget vs allowable annual energy cost budget.

CBSA Architects
Architecture • Planning • Interior Design
www.cbsa-architects.com
post office box 1239
226 second street nw
hickory, north carolina 28601
phone (828) 322-3403
fax (828) 322-1802
email cbsa@cbsa-architects.com

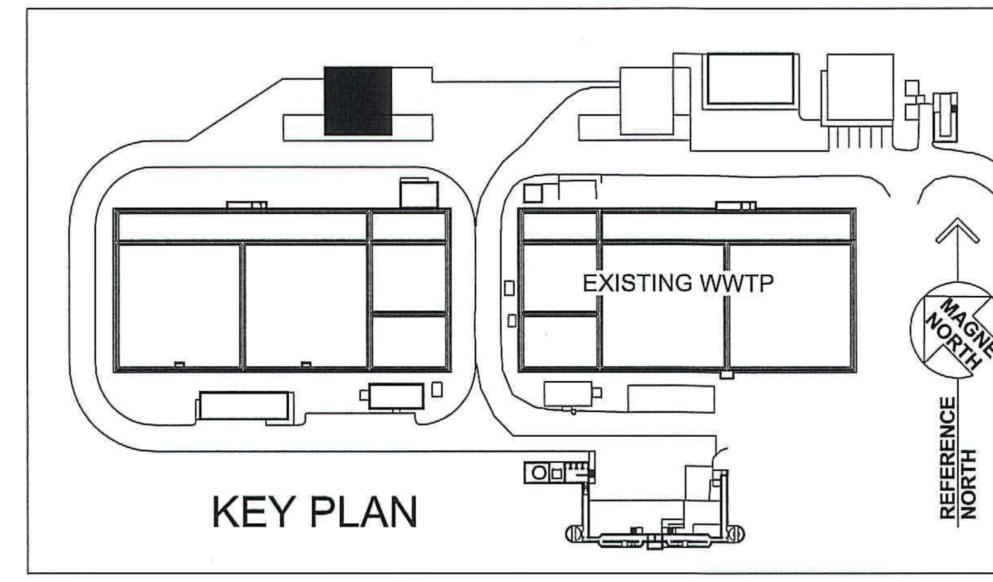

KEY PLAN

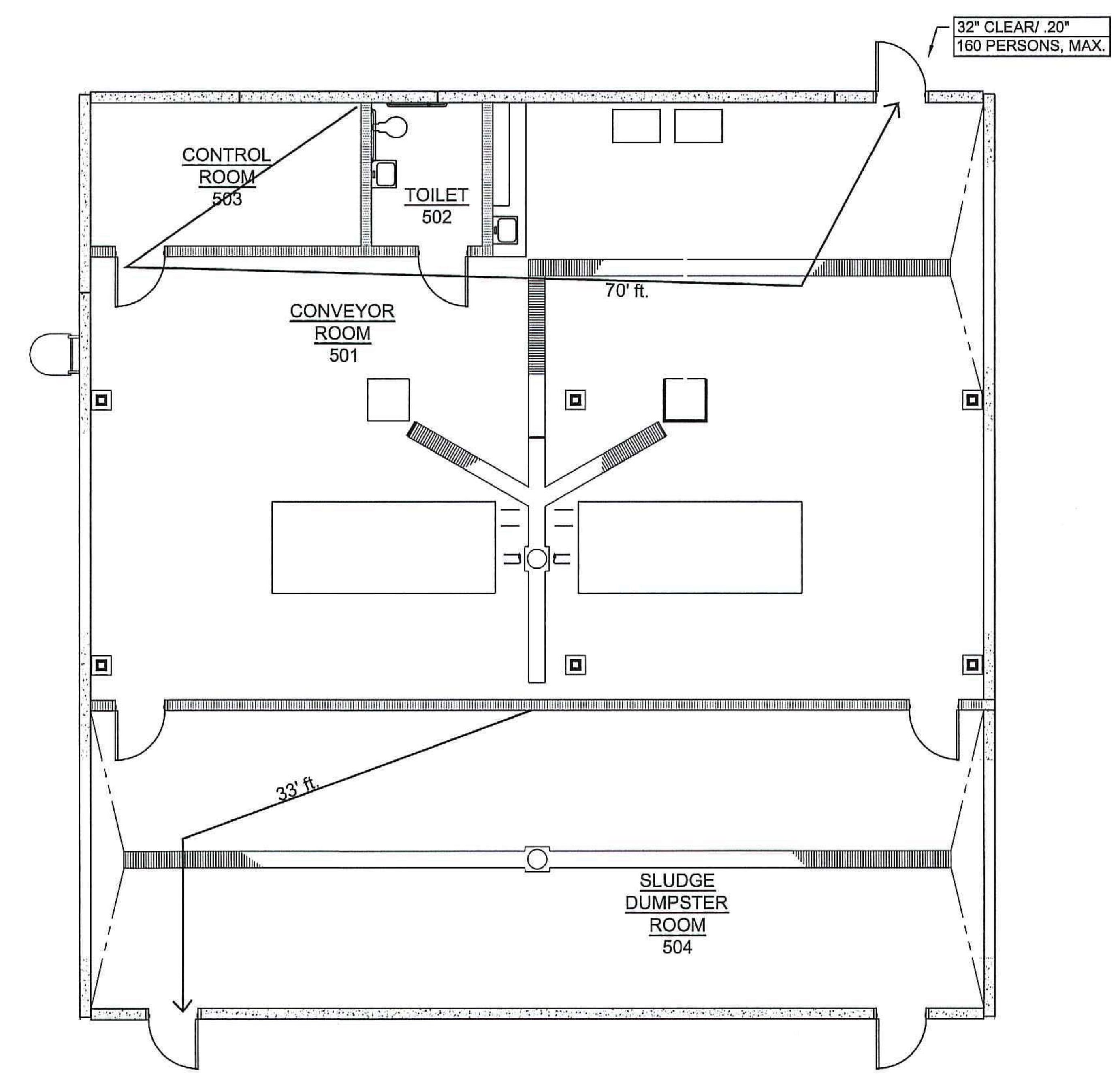

LIFE SAFETY PLAN
SCALE: 1/8" = 1'-0"

FINAL DRAWINGS - - NOT RELEASED FOR CONSTRUCTION

WK DICKSON
community infrastructure consultants
616 COLONNADE DRIVE
CHARLOTTE, NC 28205
(t)704-334-5348
(f)704-334-0078
WWW.WKDICKSON.COM
NC LICENSE NO.F-0374

JOHN STEVEN WALKER REGISTERED ARCHITECT 4814 NORTH CAROLINA HICKORY, N.C.
11/8/2018
PROFESSIONAL SEAL

REVISION RECORD

NO.	DATE	DESCRIPTION	BY

PROJECT NAME: KILLIAN CREEK WWTP PHASE 3 UPGRADE

DRAWING TITLE: APPENDIX B - SLUDGE DEWATERING BLDG. #5

PROJ. MGR.:	CRF
DESIGN BY:	CRF
DRAWN BY:	
PROJ. DATE:	11-5-2018

DRAWING NUMBER: 5.A-A.1

WKD PROJ. NO.: 20170294.00.CL

COPYRIGHT © W.K. DICKSON & CO., INC., ALL RIGHTS RESERVED. REPRODUCTION OR USE OF THIS CONTENTS OF THIS DOCUMENT, ADDITIONS OR ALTERATIONS TO THIS DOCUMENT WITHOUT WRITTEN PERMISSION OF W.K. DICKSON & CO., INC. IS PROHIBITED. ONLY PRINTS FROM THE ORIGINAL OF THIS DOCUMENT, MARKED WITH AN ORIGINAL SIGNATURE AND SEAL SHALL BE CONSIDERED TO BE VALID. TRUE COPIES.

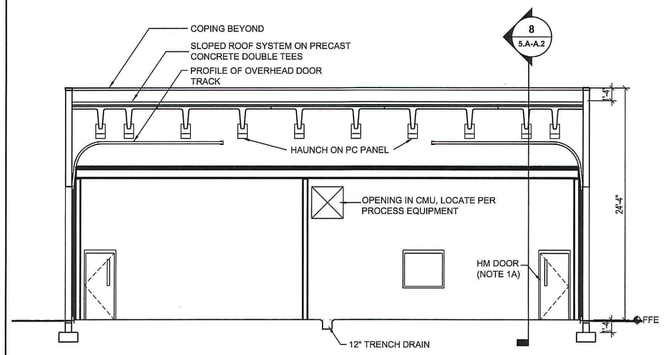

9 SECTION
5.A-A.2 SCALE: 1/8" = 1'- 0"

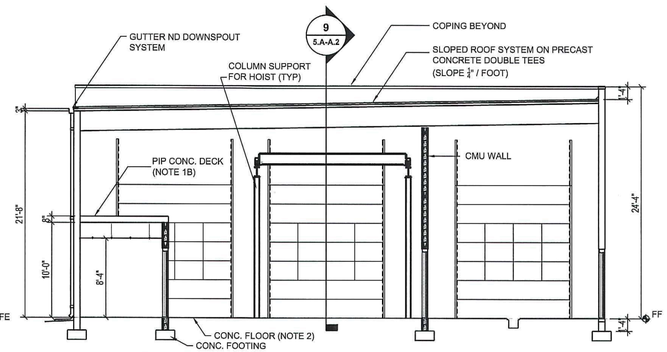

8 SECTION
5.A-A.2 SCALE: 1/8" = 1'- 0"

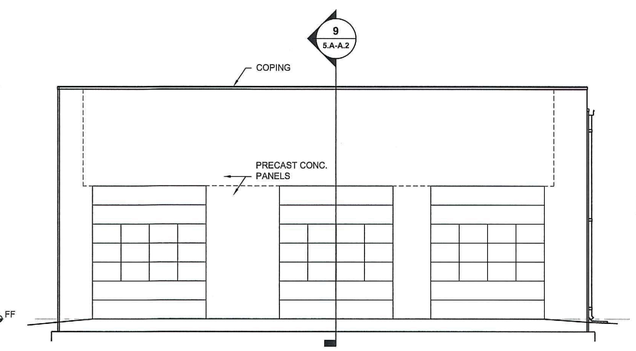

7 ELEVATION
5.A-A.2 SCALE: 1/8" = 1'- 0"

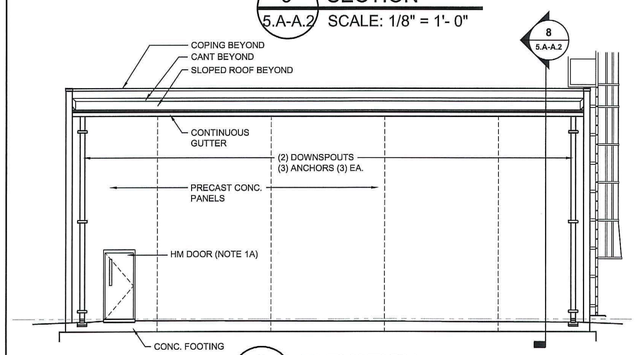

6 ELEVATION
5.A-A.2 SCALE: 1/8" = 1'- 0"

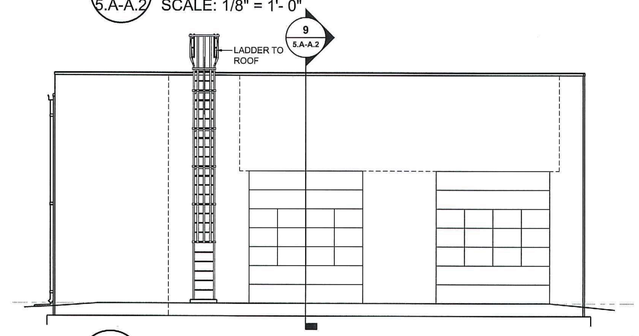

5 ELEVATION
5.A-A.2 SCALE: 1/8" = 1'- 0"

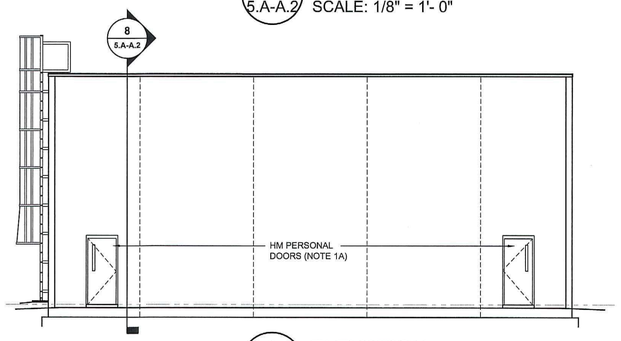

4 ELEVATION
5.A-A.2 SCALE: 1/8" = 1'- 0"

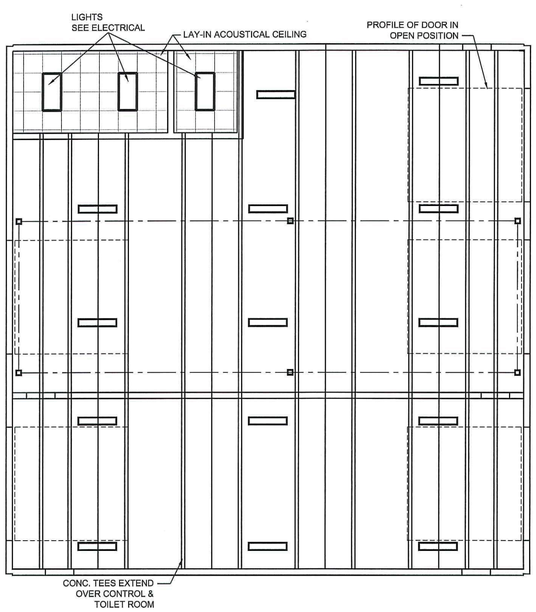

3 REFLECTED CEILING PLAN
5.A-A.2 SCALE: 1/8" = 1'- 0"

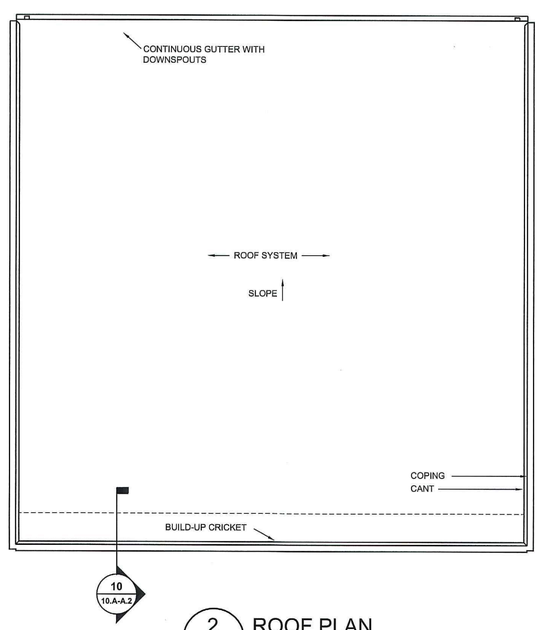

2 ROOF PLAN
5.A-A.2 SCALE: 1/8" = 1'- 0"

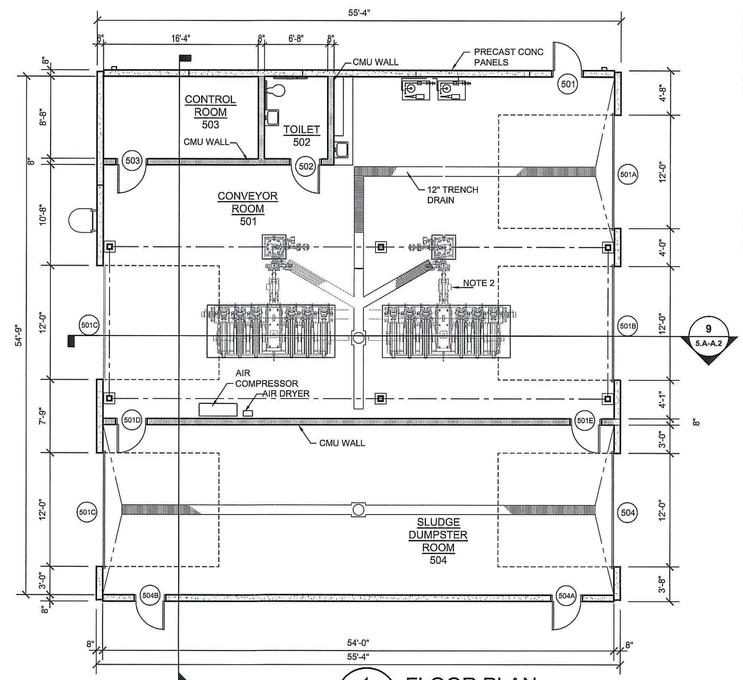

1 FLOOR PLAN
5.A-A.2 SCALE: 1/8" = 1'- 0"

CBSA Architects
Architecture • Planning • Interior Design
www.cbsa-architects.com

post office box 1239
226 second street nw
hickory, north carolina 28601

phone (828) 322-3403
fax (828) 322-1802
email cbsa@cbsa-architects.com
2017.016

NOTES

1 - BUILDINGS #2, 3, 4, 5, 6 ARE SIMILAR IN CONSTRUCTION AND DETAILS. TYPICAL INFORMATION IS SHOWN ON COMMON INFORMATION (SECTION 7 OF THESE DRAWINGS) INCLUDING:

A - DOOR SCHEDULE
B - BUILDING TYPICAL DETAILS
C - TOILET ACCESSORIES

2 - BUILDINGS #3, 4, 5, 6 ARE HOUSINGS FOR PROCESS EQUIPMENT AND PRICING, WHICH IS SHOWN "GHOSTED" ON ARCHITECTURAL DRAWINGS, AND IS DEFINED IN MORE DETAIL ON "G" SERIES DRAWINGS WHICH WILL GOVERN THE FOLLOWING ITEMS:

A - EQUIPMENT LAYOUT AND MOUNTING PADS
B - FLOOR CAPACITY
C - FLOOR AND WALL PENETRATIONS
D - FLOOR DRAINS, PITS, GRATES, SLOPES

OTHER DRAWINGS (S, P, M, E) ARE ALSO BASED UPON "G" SERIES DRAWINGS.

3 - PRECAST CONCRETE PENETRATIONS (4" O/C OR GREATER) ARE TO BE FACTORY CAST. SIZES AND LOCATIONS SHOWN ON DRAWINGS ARE FOR BID PURPOSES, AND ARE SUBJECT TO CHANGE IN SHOP DRAWING REVIEW AND COORDINATION OF OTHER PROJECT SYSTEMS.

SMALLER PRECAST CONCRETE PENETRATIONS ARE TO BE FIELD LOCATED BY THE GENERAL CONTRACTOR AND CORE-DRILLED BY THE PRECAST CONCRETE MANUFACTURER.

ALL PRECAST CONCRETE PENETRATIONS ARE TO BE WATER-TIGHT BY THE CONTRACTOR OR SUBCONTRACTORS WHOSE SYSTEM REQUIRES THE OPENING.

4 - ALL CAULKING FOR PRECAST CONCRETE JOINTS (PRECAST CONCRETE/PRECAST CONCRETE AND PRECAST CONCRETE/CAST-IN-PLACE CONCRETE) IS TO BE BY PRECAST MANUFACTURER/INSTALLER. CAULKING AROUND PENETRATIONS FOR DOORS, FANS, LOUVERS, VENTS, AND PROCESS PIPING IS TO BE BY INSTALLER OF THESE SYSTEMS.

5 - FINISH FLOOR ELEVATIONS ARE SHOWN IN SITE DRAWINGS. POURED APPROACHES TO EACH BUILDING ARE TO MEET FINISH FLOOR ELEVATION AT DOORS AND SLOPE 1/4"/FOOT AWAY FROM BUILDING FOR FIRST 5'-0".

6 - ALL AREATO HAVE NATURAL FINISHES (UNPAINTED) EXCEPT AS FOLLOWS:
A - CONTROL ROOM TO BE VINYL TILE FLOOR 4" RUBBER BASE, PAINTED CMU WALLS, PAINTED PRECAST CONCRETE WALLS, 2 X 2 LAY-IN ACOUSTIC TILE CEILING.
B - TOILET TO BE VINYL TILE FLOOR 4" RUBBER BASE, EPOXY PAINTED CMU WALLS, EPOXY PAINTED PRECAST CONCRETE WALLS, 2 X 2 LAY-IN ACOUSTIC TILE CEILING.

7 - TOILET ACCESSORIES TO INCLUDE THE FOLLOWING ITEMS PER COMMON INFORMATION (SECTION 7 OF THESE DRAWINGS):

TA-3, TA-4, TA-5, TA-6, TA-7 & TA-8

FINAL DRAWINGS - ONLY WHEN RELEASED FOR CONSTRUCTION

WK DICKSON
community infrastructure consultants
616 COLONNADE DRIVE
CHARLOTTE, NC 28205
(t)704-334-5348
(f)704-334-0078
WWW.WKDICKSON.COM
NC LICENSE NO.F-0374

JOHN STEVEN WALKER
REGISTERED ARCHITECT
14814
NORTH CAROLINA
HICKORY, N.C.
11/9/2018
PROFESSIONAL SEAL

NO.	DATE	DESCRIPTION	BY

REVISION RECORD

PROJECT NAME: KILLIAN CREEK WWTP PHASE 3 UPGRADE

DRAWING TITLE: SLUDGE DEWATERING BUILDING #5.A

PROJ. MGR.:	CRF
DESIGN BY:	CRF
DRAWN BY:	JSW
PROJ. DATE:	11-5-2018

DRAWING NUMBER: 5.A-A.2

WKD PROJ. NO.: 20170294.00.CL

COPYRIGHT ©, W.K. DICKSON & CO., INC. ALL RIGHTS RESERVED. REPRODUCTION OR USE OF THE CONTENTS OF THIS DOCUMENT, ADDITIONS OR DELETIONS TO THIS DOCUMENT, IN WHOLE OR IN PART, WITHOUT WRITTEN CONSENT OF W.K. DICKSON & CO., INC., IS PROHIBITED. ONLY COPIES FROM THE ORIGINAL OF THIS DOCUMENT, MARKED WITH AN ORIGINAL SIGNATURE AND SEAL SHALL BE CONSIDERED TO BE VALID, TRUE COPIES.

2018 APPENDIX B
BUILDING CODE SUMMARY
FOR ALL COMMERCIAL PROJECTS
(Except 1 and 2 - Family Dwellings and Townhouses)

Name of Project: KILLIAN CREEK WASTEWATER TREATMENT PLANT - ROTARY DRUM THICKENER BUILDING
Address: 6769 OLD PLANK ROAD, STANLEY, N.C. Zip Code 28164
Proposed Use: WASTEWATER TREATMENT
Owner or Authorized Agent: DON CHAMBLEE Phone: - Email -
Owned By: ■ City/County ☐ Private ☐ State
Code Enforcement Jurisdiction: ☐ City - ■ County LINCOLN ☐ State

CONTACT

DESIGNER	FIRM	NAME	LICENSE #	TELEPHONE #	EMAIL
Architectural	CBSA ARCHITECTS	J. STEVEN WALKER	4814	828 332-3403	cbsa@cbsa-architects.com
Civil	W.K. DICKSON	CHARLES R FRONEBERGER	8802	704 334-5348	
Electrical	BRITTAIN ENGINEERING	DONALD R. BRITTAIN, PE	7883	828-328-1813	
Fire Alarm	BRITTAIN ENGINEERING	DONALD R. BRITTAIN, PE	7883	828-328-1813	
Plumbing	BRITTAIN ENGINEERING	DONALD R. BRITTAIN, PE	7883	828-328-1813	
Mechanical	BRITTAIN ENGINEERING	DONALD R. BRITTAIN, PE	7883	828-328-1813	
Sprinkler-Standpipe	N/A	N/A	N/A	N/A	
Structural	STEWART ENGINEERING	MICHAEL A. GARDINA, PE	024096	704-334-725	
Retaining Wall >5' High	N/A	N/A			
Other					

2018 NC BUILDING CODE: ■ New Building ☐ Shell / Core ☐ 1st Time Interior Completions
☐ Addition ☐ Phased Construction - Shell Core

2018 NC EXISTING BUILDING CODE: (check all that apply) ☐ Prescriptive ☐ Repair ☐ Chapter 14 ☐ Alteration Level I ☐ Alteration Level II ☐ Alteration Level III ☐ Historic Property ☐ Change of Use

CONSTRUCTED: (Date) -- CURRENT OCCUPANCY(S) (CH. 3) --
RENOVATED: (Date) -- PROPOSED OCCUPANCY(S) (CH. 3) --

OCCUPANCY CATEGORY (Table 1604.5): Current: -- Proposed: --

BASIC BUILDING DATA:
Construction Type: (check all that apply) ☐ I-A ☐ I-B ☐ II-A ■ II-B ☐ III-A ☐ III-B ☐ IV ☐ V-A ☐ V-B
Sprinklers ■ No ☐ Partial ☐ Yes ☐ NFPA 13 ☐ NFPA 13R ☐ NFPA 13D
Standpipes: ■ No ☐ Yes Class ☐ I ☐ II ☐ III ☐ Wet ☐ Dry
Primary Fire District: ■ No ☐ Yes Flood Hazard Area: ☐ No ☐ Yes
Special Inspections Required: ☐ No ☐ Yes

GROSS BUILDING AREA TABLE

Floor	Existing (SQ FT)	New (SQ FT)	Sub-Total
3rd Floor			
2nd Floor			
Mezzanine			
1st Floor		857	857
Basement			
TOTAL	--		857

ALLOWABLE AREA

Primary Occupancy Classification(s):
Assembly ☐ A-1 ☐ A-2 ☐ A-3 ☐ A-4 ☐ A-5
Business ☐
Educational ☐
Factory ☐ F-1 Moderate ☐ F-2 Low
Hazardous ☐ H-1 Detonate ☐ H-2 Deflagrate ☐ H-3 Combust ☐ H-4 Health ☐ H-5 HPM
Institutional ☐ I-1 ☐ I-2 ☐ I-3 ☐ I-4
I-1 Condition ☐ 1 ☐ 2
I-2 Condition ☐ 1 ☐ 2
I-3 Condition ☐ 1 ☐ 2 ☐ 3 ☐ 4 ☐ 5
Mercantile ☐
Residential ☐ R-1 ☐ R-2 ☐ R-3 ☐ R-4
Storage ☐ S-1 Moderate ☐ S-2 Low ☐ High Piled
☐ Parking Garage ☐ Open ☐ Enclosed ☐ Repair Garage
Utility and Miscellaneous ■

Accessory Occupancy Classification(s): ______
Incidental Uses (Table 509): ______
This separation is not exempt as a Non-Separated Use (see exceptions).
Special Uses (Chapter 4 - List Code Sections): ______
Special Provisions (Chapter 5 - List Code Sections): ______
Mixed Occupancy: ■ No ☐ Yes Separation: ____ Hr. Exception: ______

$$\frac{\text{Actual Area of Occupancy A}}{\text{Allowable Area of Occupancy A}} + \frac{\text{Actual Area of Occupancy B}}{\text{Allowable Area of Occupancy B}} \leq 1$$

______ + ______ + ... = ______ ≤ 1.00

STORY NO.	DESCRIPTION AND USE	(A) BLDG AREA PER STORY (ACTUAL)	(B) TABLE 506.2[4] AREA	(C) AREA FOR FRONTAGE INCREASE[1,5]	(D) ALLOWABLE AREA OR UNLIMITED[2,3]
ONE	S-1	857	8500	8500	8500

1 Frontage area increases from Section 506.2 are computed thus:
a. Perimeter which fronts a public way or open space having 20 feet minimum width = ______ (F)
b. Total Building Perimeter = ______ (P)
c. Ratio (F/P) = ______ (F/P)
d. W = Minimum width of public way = ______ (W)

2 Unlimited area applicable under conditions of Section 507.
3 Maximum Building Area = total number of stories in the building x D (maximum 3 stories) (506.2).
4 The maximum area of open parking garages must comply with 406.5.4. The maximum area of the air traffic control towers must comply with 412.3.1.
5 Frontage increase is based on the unsprinklered area value in Table 506.2.

ALLOWABLE HEIGHT

	ALLOWABLE	SHOWN ON PLANS	CODE REFERENCE
Building Height in Feet (Table 504.3)	55	25'	--
Building Height in Stories (Table 504.4)	4	1	--

1 Provide code reference if the "Shown on Plans" quantity is not based on Table 504.3 or 504.4

FIRE PROTECTION REQUIREMENTS

BUILDING ELEMENT	FIRE SEPARATION DISTANCE (FEET)	RATING REQ'D	RATING PROVIDED (W/____* REDUCTION)	DETAIL # AND SHEET #	DESIGN # FOR RATED ASSEMBLY	DESIGN # FOR RATED PENETRATION	DESIGN # FOR RATED JOINTS
Structural frame, including columns, girders, trusses		0	0		N/A	N/A	N/A
Bearing walls		0	0		N/A	N/A	N/A
Exterior		0	0		N/A	N/A	N/A
North		0	0		N/A	N/A	N/A
East		0	0		N/A	N/A	N/A
West		0	0		N/A	N/A	N/A
South		0	0		N/A	N/A	N/A
Interior		N/A	N/A		N/A	N/A	N/A
Nonbearing walls and partitions Exterior							
North	N/A	N/A	N/A		N/A	N/A	N/A
East	N/A	N/A	N/A		N/A	N/A	N/A
West	N/A	N/A	N/A		N/A	N/A	N/A
South	N/A	N/A	N/A		N/A	N/A	N/A
Interior walls and partitions	N/A	N/A	N/A		N/A	N/A	N/A
Floor construction Including supporting beams and joists		0	0		N/A	N/A	N/A
Floor Ceiling Assembly							
Columns Supporting Floors							
Roof construction Including supporting beams and joists		0	0		N/A	N/A	N/A
Roof Ceiling Assembly		N/A	N/A		N/A	N/A	N/A
Columns Supporting Roof		N/A	N/A		N/A	N/A	N/A
Shaft Enclosures- Exit		N/A	N/A		N/A	N/A	N/A
Shaft Enclosures- Other		N/A	N/A		N/A	N/A	N/A
Corridor Separation		N/A	N/A		N/A	N/A	N/A
Occupancy / Fire Barrier Separation		N/A	N/A		N/A	N/A	N/A
Party / Fire Wall Separation		N/A	N/A		N/A	N/A	N/A
Smoke Barrier Separation		N/A	N/A		N/A	N/A	N/A
Tenant / Dwelling Unit / Sleeping Unit Separation		N/A	N/A		N/A	N/A	N/A
Incidental Use Separation		N/A	N/A		N/A	N/A	N/A

* Indicate section number permitting reduction

PERCENTAGE OF WALL OPENING CALCULATIONS

Fire Separation Distance (Feet) From Property Lines	Degree of Openings Protection (Table 705.8)	Allowable Area (%)	Actual Shown on Plans (%)
--	--	--	--
--	--	--	--

LIFE SAFETY SYSTEM REQUIREMENTS

Emergency Lighting: ■ Yes ☐ No
Exit Signs: ■ Yes ☐ No
Fire Alarm: ■ Yes ☐ No
Smoke Detection Systems: ■ Yes ☐ No
Carbon Monoxide Protection: ☐ Yes ■ No

LIFE SAFETY PLAN REQUIREMENTS

Life safety Plan Sheet # BC1.3

☐ Fire and / or smoke rated wall locations (Chapter 7)
☐ Assumed and real property line locations (if not on site plan)
☐ Exterior wall opening area with respect to distance to assumed property lines (705.8)
☐ Occupancy Use for each area as it relates to occupant load calculation (Table 1004.1.2)
☐ Occupants loads for each area
■ Exit access travel distances (1017)
■ Common path of travel distances (Tables 1006.2.1 & 1006.3.2)
☐ Dead end lengths (1020.4)
☐ Clear exit widths for each exit door
☐ Maximum calculated occupant load capacity each exit door can accommodate based on egress width (1005.3)
■ Actual occupant load for each exit door
☐ A seperate schematic plan indicating where fire rated floor/ceiling and/or roof structure is provided for purposes of occupancy separation
☐ Location of doors with panic hardware (1010.1.10)
☐ Location of doors with delayed egress locks and the amount of delay (1010.1.9.7)
☐ Location of doors with electromagnetic egress locks (1010.1.9.9)
☐ Location of doors equipped with hold open devices
☐ Location of emergency escape windows (1030)
☐ The square footage of each fire area (202)
☐ The square footage of each smoke compartment for Occupancy Classification I-2 (407.5)
☐ Note any code exceptions or table notes that may have been utilized regarding the items above

ACCESSIBLE DWELLING UNITS
(SECTION 1107)

TOTAL UNITS	ACCESSIBLE UNITS REQUIRED	ACCESSIBLE UNITS PROVIDED	TYPE A UNITS REQUIRED	TYPE A UNITS PROVIDED	TYPE B UNITS REQUIRED	TYPE B UNITS PROVIDED	TOTAL ACCESSIBLE UNITS PROVIDED
NA	.	.	.	.	.	.	.

ACCESSIBLE PARKING
(SECTION 1106)

LOT OR PARKING AREA	TOTAL # OF PARKING SPACES: REQUIRED	TOTAL # OF PARKING SPACES: PROVIDED	# OF ACCESSIBLE SPACES PROVIDED: REGULAR WITH 5' ACCESS AISLE	VAN SPACES WITH 132" ACCESS AISLE	VAN SPACES WITH 8' ACCESS AISLE	TOTAL # ACCESSIBLE PROVIDED
TOTAL						

PLUMBING FIXTURE REQUIREMENTS
(TABLE 2902.1)

USE		WATERCLOSETS MALE	WATERCLOSETS FEMALE	WATERCLOSETS UNISEX	URINALS	LAVATORIES MALE	LAVATORIES FEMALE	LAVATORIES UNISEX	SHOWERS/ TUBS	DRINKING FOUNTAINS REGULAR	DRINKING FOUNTAINS ACCESSIBLE
SPACE	EXIST'G										
	NEW	N/A	N/A	N/A	N/A	N/A	N/A	N/A	N/A	N/A	N/A
	REQUIRED	--									

SPECIAL APPROVALS

Special approval: (Local Jurisdiction, Department of Insurance, OSC, DPI, DHHS, etc., describe below)

STRUCTURAL DESIGN
(REFER TO STRUCTURAL DRAWINGS FOR COMPLIANCE INFORMATION)

DESIGN LOADS:
Importance Factors: Wind (I_W) ______ Snow (I_S) ______ Seismic (I_E) ______
Live Loads: Roof ______ psf Mezzanine ______ psf Floor ______ psf
Ground Snow Loads: ______ psf
Wind Loads: Basic Wind Speed ______ mph (ASCE-7) Exposure Category ______

SEISMIC DESIGN CATEGORY ☐ A ☐ B ☐ C ☐ D
Provide the following Seismic Design Parameters:
Occupancy Category (Table 1604.5) ☐ I ☐ II ☐ III ☐ IV
Spectral Response Acceleration S_S______%g S_1______%g
Site Classification (ASCE 7) ☐ A ☐ B ☐ C ☐ D ☐ E ☐ F
Data Source: ☐ Field Test ☐ Presumptive ☐ Historical Data
Basic structural system (check one)
☐ Bearing Wall ☐ Dual w/Special Moment Frame
☐ Building Frame ☐ Dual w/Intermediate R/C or Special Steel
☐ Moment Frame ☐ Inverted Pendulum
Analysis Procedure ☐ Simplified ☐ Equivalent Lateral Force ☐ Dynamic
Architectural, Mechanical, Components anchored? ☐ Yes ☐ No

LATERAL DESIGN CONTROL: Earthquake ☐ Wind ☐

SOIL BEARING CAPACITIES:
Field Test (provide copy of test report) ______ psf
Presumptive Bearing capacity ______ psf
Pile size, type, and capacity ______

MECHANICAL SUMMARY
(REFER TO MECHANICAL DRAWINGS FOR COMPLIANCE INFORMATION)

ELECTRICAL SUMMARY
(REFER TO ELECTRICAL DRAWINGS FOR COMPLIANCE INFORMATION)

ENERGY SUMMARY
(N/A - THIS BUILDING IS NOT REGULARLY OCCUPIED)

CBSA Architects
Architecture • Planning • Interior Design
www.cbsa-architects.com
post office box 1239
226 second street nw
hickory, north carolina 28601
phone (828) 322-3403
fax (828) 322-1802
email cbsa@cbsa-architects.com

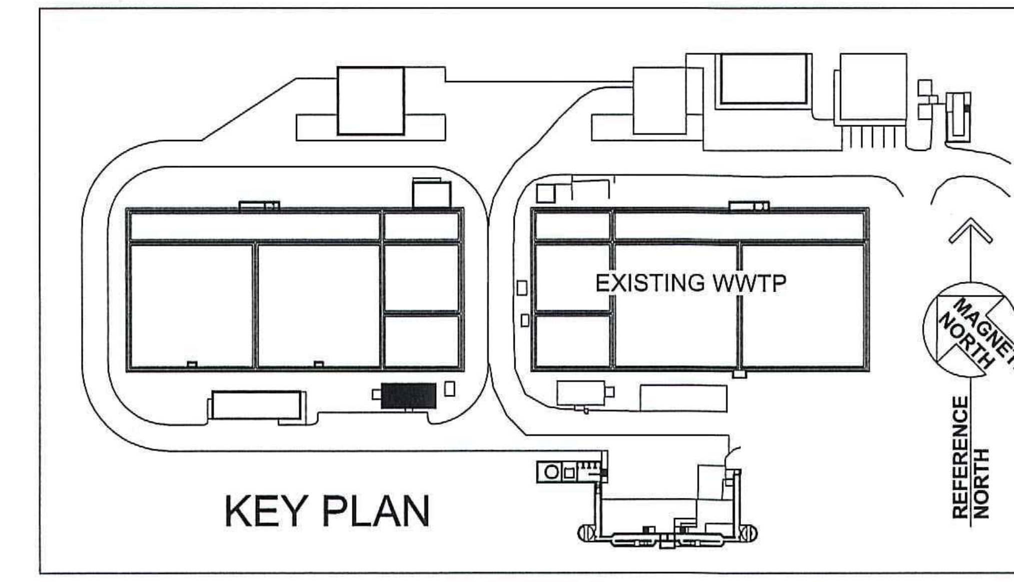

KEY PLAN

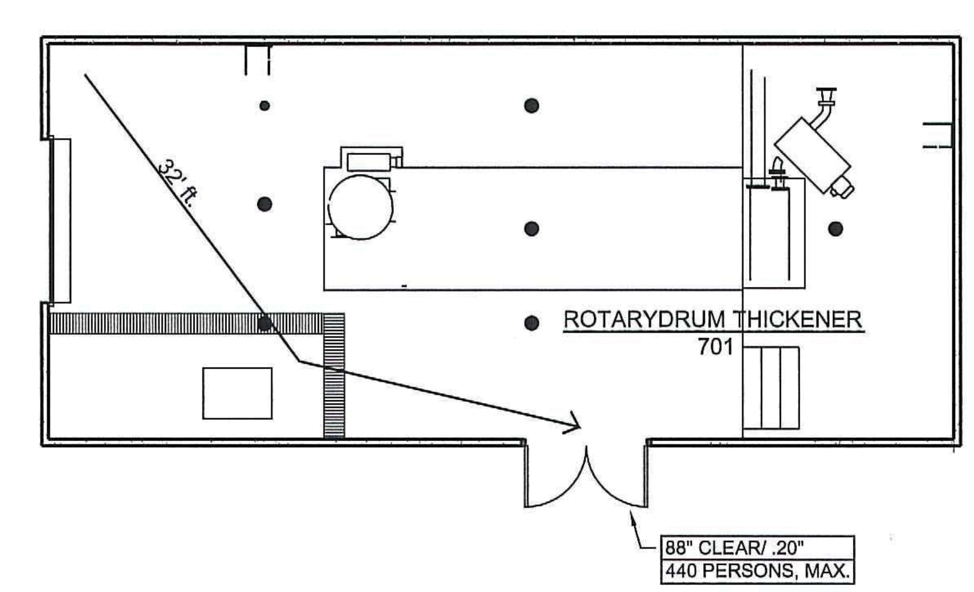

LIFE SAFETY PLAN
SCALE: 1/8" = 1'-0"

FINAL DRAWINGS - - NOT RELEASED FOR CONSTRUCTION

WK DICKSON
community infrastructure consultants
616 COLONNADE DRIVE
CHARLOTTE, NC 28205
(t)704-334-5348
(f)704-334-0078
WWW.WKDICKSON.COM
NC LICENSE NO.F-0374

JOHN STEVEN WALKER REGISTERED ARCHITECT 4814 NORTH CAROLINA HICKORY, N.C.
11/8/2018
PROFESSIONAL SEAL

REVISION RECORD

NO.	DATE	DESCRIPTION	BY

PROJECT NAME: KILLIAN CREEK WWTP PHASE 3 UPGRADE
DRAWING TITLE: APPENDIX B ROTARY DRUM THICKENER BLDG #7

PROJ. MGR.:	CRF
DESIGN BY:	CRF
DRAWN BY:	
PROJ. DATE:	11-5-2018

DRAWING NUMBER: 7.A-A.1
WKD PROJ. NO.: 20170294.00.CL

COPYRIGHT © WK DICKSON & CO., INC., ALL RIGHTS RESERVED. REPRODUCTION OR USE OF THE CONTENTS OF THIS DOCUMENT, ADDITIONS OR EDITORIAL CHANGES TO THE CONTENTS OF THIS DOCUMENT, WITHOUT WRITTEN CONSENT OF WK DICKSON & CO., INC., IS PROHIBITED. ONLY COPIES FROM THE ORIGINAL OF THIS DOCUMENT, MARKED WITH AN ORIGINAL SIGNATURE AND SEAL SHALL BE CONSIDERED TO BE VALID, TRUE COPIES.

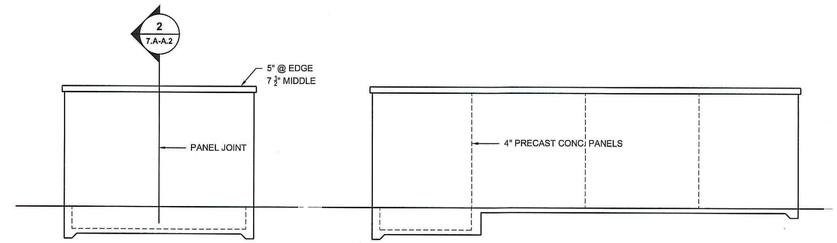

6 ELEVATION
7.A-A.2 SCALE: 1/8" = 1'- 0"

5 ELEVATION
7.A-A.2 SCALE: 1/8" = 1'- 0"

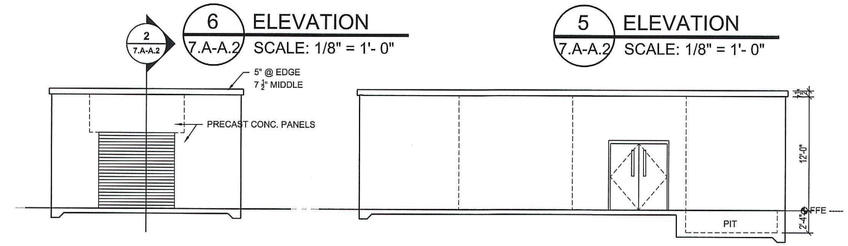

4 ELEVATION
7.A-A.2 SCALE: 1/8" = 1'- 0"

3 ELEVATION
7.A-A.2 SCALE: 1/8" = 1'- 0"

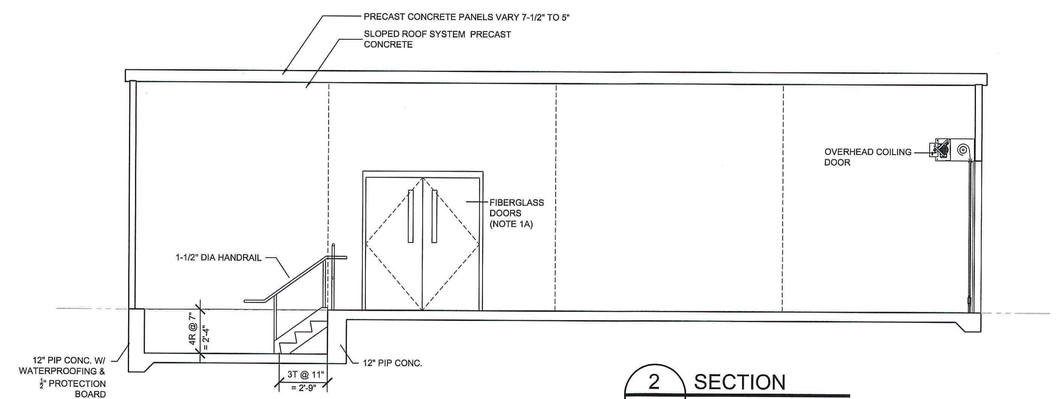

2 SECTION
7.A-A.2 SCALE: 1/4" = 1'- 0"

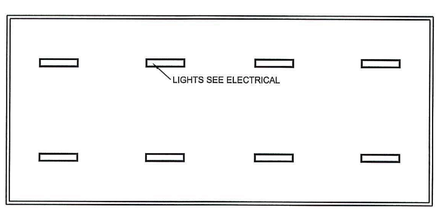

8 REFLECTED CEILING PLAN
7.A-A.2 SCALE: 1/8" = 1'- 0"

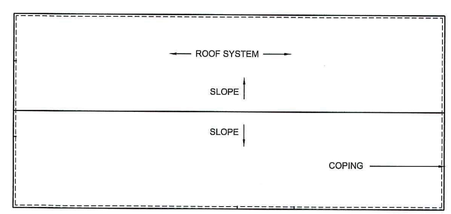

7 ROOF PLAN
7.A-A.2 SCALE: 1/8" = 1'- 0"

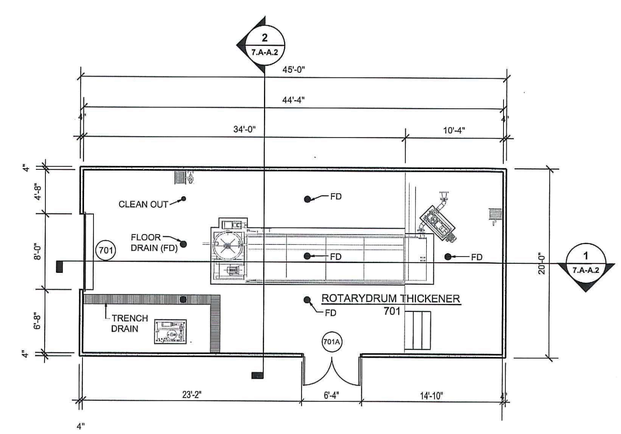

1 FLOOR PLAN
7.A-A.2 SCALE: 1/8" = 1'- 0"

CBSA Architects
Architecture • Planning • Interior Design
www.cbsa-architects.com

post office box 1239
226 second street nw
hickory, north carolina 28601

phone (828) 322-3403
fax (828) 322-1802
email cbsa@cbsa-architects.com
2017.016

NOTES

1 - BUILDINGS #2, 3, 4, 5, 6 ARE SIMILAR IN CONSTRUCTION AND DETAILS. TYPICAL INFORMATION IS SHOWN ON COMMON INFORMATION (SECTION 7 OF THESE DRAWINGS) INCLUDING:

A - DOOR SCHEDULE
B - BUILDING TYPICAL DETAILS
C - TOILET ACCESSORIES

2 - BUILDINGS #3, 4, 5, 6 ARE HOUSINGS FOR PROCESS EQUIPMENT AND PRICING, WHICH IS SHOWN "GHOSTED" ON ARCHITECTURAL DRAWINGS, AND IS DEFINED IN MORE DETAIL ON "G" SERIES DRAWINGS WHICH WILL GOVERN THE FOLLOWING ITEMS:

A - EQUIPMENT LAYOUT AND MOUNTING PADS
B - FLOOR CAPACITY
C - FLOOR AND WALL PENETRATIONS
D - FLOOR DRAINS, PITS, GRATES, SLOPES

OTHER DRAWINGS (S, P, M, E) ARE ALSO BASED UPON "G" SERIES DRAWINGS.

3 - PRECAST CONCRETE PENETRATIONS (4" O/C OR GREATER) ARE TO BE FACTORY CAST. SIZES AND LOCATIONS SHOWN ON DRAWINGS ARE FOR BID PURPOSES, AND ARE SUBJECT TO CHANGE IN SHOP DRAWING REVIEW AND COORDINATION OF OTHER PROJECT SYSTEMS.

SMALLER PRECAST CONCRETE PENETRATIONS ARE TO BE FIELD LOCATED BY THE GENERAL CONTRACTOR AND CORE-DRILLED BY THE PRECAST CONCRETE MANUFACTURER.

ALL PRECAST CONCRETE PENETRATIONS ARE TO BE WATER-TIGHT BY THE CONTRACTOR OR SUBCONTRACTORS WHOSE SYSTEM REQUIRES THE OPENING.

4 - ALL CAULKING FOR PRECAST CONCRETE JOINTS (PRECAST CONCRETE/PRECAST CONCRETE AND PRECAST CONCRETE/CAST-IN-PLACE CONCRETE) IS TO BE BY PRECAST MANUFACTURER/INSTALLER. CAULKING AROUND PENETRATIONS FOR DOORS, FANS, LOUVERS, VENTS, AND PROCESS PIPING IS TO BE BY INSTALLER OF THESE SYSTEMS.

5 - FINISH FLOOR ELEVATIONS ARE SHOWN IN SITE DRAWINGS. POURED APPROACHES TO EACH BUILDING ARE TO MEET FINISH FLOOR ELEVATION AT DOORS AND SLOPE 1/4"/FOOT AWAY FROM BUILDING FOR FIRST 5'-0".

6 - STAIR PAN CONSTRUCTION IS 14 GAUGE STEEL BENT PLATE SUPPORT ON 1-1/4" X 1-1/4" X 1/8" SHELF ANGLES. WELD PANS TOGETHER AND FILL WITH 2" CONCRETE. SUPPORT WITH (2) C8X10 STRINGERS. WELD ATTACH HANDRAIL ON ONE SITE, ANCHOR OPPOSITE RAIL TO PRECAST WALL.

FINAL DRAWINGS - NOT RELEASED FOR CONSTRUCTION

WK DICKSON
community infrastructure consultants
616 COLONNADE DRIVE
CHARLOTTE, NC 28205
(t)704-334-5348
(f)704-334-0078
WWW.WKDICKSON.COM
NC LICENSE NO.F-0374

JOHN STEVEN WALKER
REGISTERED ARCHITECT
4814
NORTH CAROLINA
HICKORY, N.C.
11/8/2018
PROFESSIONAL SEAL

NO.	DATE	DESCRIPTION	BY

REVISION RECORD

PROJECT NAME: KILLIAN CREEK WWTP PHASE 3 UPGRADE

DRAWING TITLE: ROTARY DRUM THICKENER BUILDING #7

PROJ. MGR.:	CRF
DESIGN BY:	CRF
DRAWN BY:	---
PROJ. DATE:	11-5-2018

DRAWING NUMBER: 7.A-A.2

WKD PROJ. NO.: 20170294.00.CL

COPYRIGHT © W.K. DICKSON & CO., INC. ALL RIGHTS RESERVED. REPRODUCTION OR USE OF THE CONTENTS OF THIS DOCUMENT, ADDITIONS OR DELETIONS TO THIS DOCUMENT, IN WHOLE OR IN PART, WITHOUT WRITTEN CONSENT OF W.K. DICKSON & CO., INC. IS PROHIBITED. ONLY COPIES FROM THE ORIGINAL OF THIS DOCUMENT, MARKED WITH AN ORIGINAL SIGNATURE AND SEAL SHALL BE CONSIDERED TO BE VALID, TRUE COPIES.

2018 APPENDIX B
BUILDING CODE SUMMARY
FOR ALL COMMERCIAL PROJECTS
(Except 1 and 2 - Family Dwellings and Townhouses)

Name of Project: KILLIAN CREEK WASTEWATER TREATMENT PLANT - CHEMICAL FEED BUILDING
Address: 6769 OLD PLANK ROAD, STANLEY, N.C. Zip Code 28164
Proposed Use: WASTEWATER TREATMENT
Owner or Authorized Agent: DON CHAMBLEE Phone: - Email -
Owned By: ■ City/County ☐ Private ☐ State
Code Enforcement Jurisdiction: ☐ City - ■ County LINCOLN ☐ State

CONTACT

DESIGNER	FIRM	NAME	LICENSE #	TELEPHONE #	EMAIL
Architectural	CBSA ARCHITECTS	J. STEVEN WALKER	4814	828 332-3403	cbsa@cbsa-architects.com
Civil	W.K. DICKSON	CHARLES R FRONEBERGER	8802	704 334-5348	
Electrical	BRITTAIN ENGINEERING	DONALD R. BRITTAIN, PE	7883	828-328-1813	
Fire Alarm	BRITTAIN ENGINEERING	DONALD R. BRITTAIN, PE	7883	828-328-1813	
Plumbing	BRITTAIN ENGINEERING	DONALD R. BRITTAIN, PE	7883	828-328-1813	
Mechanical	BRITTAIN ENGINEERING	DONALD R. BRITTAIN, PE	7883	828-328-1813	
Sprinkler-Standpipe	N/A	N/A	N/A	N/A	
Structural	STEWART ENGINEERING	MICHAEL A. GARDINA, PE	024096	704-334-725	
Retaining Wall >5' High	N/A	N/A			
Other					

2018 NC BUILDING CODE: ■ New Building ☐ Shell / Core ☐ 1st Time Interior Completions
☐ Addition ☐ Phased Construction - Shell Core

2018 NC EXISTING BUILDING CODE: (check all that apply) ☐ Prescriptive ☐ Repair ☐ Chapter 14 ☐ Alteration Level I ☐ Alteration Level II ☐ Alteration Level III ☐ Historic Property ☐ Change of Use

CONSTRUCTED: (Date) -- CURRENT OCCUPANCY(S) (CH. 3) --
RENOVATED: (Date) -- PROPOSED OCCUPANCY(S) (CH. 3) --

OCCUPANCY CATEGORY (Table 1604.5): Current: -- Proposed: --

BASIC BUILDING DATA:
Construction Type: (check all that apply) ☐ I-A ☐ I-B ☐ II-A ■ II-B ☐ III-A ☐ III-B ☐ IV ☐ V-A ☐ V-B
Sprinklers ■ No ☐ Partial ☐ Yes ☐ NFPA 13 ☐ NFPA 13R ☐ NFPA 13D
Standpipes: ■ No ☐ Yes Class ☐ I ☐ II ☐ III ☐ Wet ☐ Dry
Primary Fire District: ■ No ☐ Yes Flood Hazard Area: ☐ No ☐ Yes
Special Inspections Required: ☐ No ☐ Yes

GROSS BUILDING AREA TABLE

Floor	Existing (SQ FT)	New (SQ FT)	Sub-Total
3rd Floor			
2nd Floor			
Mezzanine			
1st Floor		64	64
Basement			
TOTAL	--		64

ALLOWABLE AREA

Primary Occupancy Classification(s):
Assembly ☐ A-1 ☐ A-2 ☐ A-3 ☐ A-4 ☐ A-5
Business ☐
Educational ☐
Factory ☐ F-1 Moderate ☐ F-2 Low
Hazardous ☐ H-1 Detonate ☐ H-2 Deflagrate ☐ H-3 Combust ☐ H-4 Health ☐ H-5 HPM
Institutional ☐ I-1 ☐ I-2 ☐ I-3 ☐ I-4
I-1 Condition ☐ 1 ☐ 2
I-2 Condition ☐ 1 ☐ 2
I-3 Condition ☐ 1 ☐ 2 ☐ 3 ☐ 4 ☐ 5
Mercantile ☐
Residential ☐ R-1 ☐ R-2 ☐ R-3 ☐ R-4
Storage ☐ S-1 Moderate ☐ S-2 Low ☐ High Piled
☐ Parking Garage ☐ Open ☐ Enclosed ☐ Repair Garage
Utility and Miscellaneous ■

Accessory Occupancy Classification(s): ____
Incidental Uses (Table 509): ____
This separation is not exempt as a Non-Separated Use (see exceptions).
Special Uses (Chapter 4 - List Code Sections): ____
Special Provisions (Chapter 5 - List Code Sections): ____
Mixed Occupancy: ■ No ☐ Yes Separation: ____ Hr. Exception: ____

$$\frac{\text{Actual Area of Occupancy A}}{\text{Allowable Area of Occupancy A}} + \frac{\text{Actual Area of Occupancy B}}{\text{Allowable Area of Occupancy B}} \leq 1$$

____ + ____ + ... = ____ ≤ 1.00

STORY NO.	DESCRIPTION AND USE	(A) BLDG AREA PER STORY (ACTUAL)	(B) TABLE 506.2[1] AREA	(C) AREA FOR FRONTAGE INCREASE[1,5]	(D) ALLOWABLE AREA OR UNLIMITED[2,3]
ONE	S-1	640	8500	8500	8500

1 Frontage area increases from Section 506.2 are computed thus:
a. Perimeter which fronts a public way or open space having 20 feet minimum width = ____ (F)
b. Total Building Perimeter = ____ (P)
c. Ratio (F/P) = ____ (F/P)
d. W = Minimum width of public way = ____ (W)

2 Unlimited area applicable under conditions of Section 507.
3 Maximum Building Area = total number of stories in the building x D (maximum 3 stories) (506.2).
4 The maximum area of open parking garages must comply with 406.5.4. The maximum area of the air traffic control towers must comply with 412.3.1.
5 Frontage increase is based on the unsprinklered area value in Table 506.2.

ALLOWABLE HEIGHT

	ALLOWABLE	SHOWN ON PLANS	CODE REFERENCE
Building Height in Feet (Table 504.3)	55	9'	--
Building Height in Stories (Table 504.4)	2	1	--

1 Provide code reference if the "Shown on Plans" quantity is not based on Table 504.3 or 504.4

FIRE PROTECTION REQUIREMENTS

BUILDING ELEMENT	FIRE SEPARATION DISTANCE (FEET)	RATING REQ'D	RATING PROVIDED (W/ ____* REDUCTION)	DETAIL # AND SHEET #	DESIGN # FOR RATED ASSEMBLY	DESIGN # FOR RATED PENETRATION	DESIGN # FOR RATED JOINTS
Structural frame, Including columns, girders, trusses		0	0		N/A	N/A	N/A
Bearing walls		0	0		N/A	N/A	N/A
Exterior		0	0		N/A	N/A	N/A
North		0	0		N/A	N/A	N/A
East		0	0		N/A	N/A	N/A
West		0	0		N/A	N/A	N/A
South		0	0		N/A	N/A	N/A
Interior		N/A	N/A		N/A	N/A	N/A
Nonbearing walls and partitions Exterior							
North	N/A	N/A	N/A		N/A	N/A	N/A
East	N/A	N/A	N/A		N/A	N/A	N/A
West	N/A	N/A	N/A		N/A	N/A	N/A
South	N/A	N/A	N/A		N/A	N/A	N/A
Interior walls and partitions	N/A	N/A	N/A		N/A	N/A	N/A
Floor construction Including supporting beams and joists		0	0		N/A	N/A	N/A
Floor Ceiling Assembly							
Columns Supporting Floors							
Roof construction Including supporting beams and joists		0	0		N/A	N/A	N/A
Roof Ceiling Assembly		N/A	N/A		N/A	N/A	N/A
Columns Supporting Roof		N/A	N/A		N/A	N/A	N/A
Shaft Enclosures- Exit		N/A	N/A		N/A	N/A	N/A
Shaft Enclosures- Other		N/A	N/A		N/A	N/A	N/A
Corridor Separation		N/A	N/A		N/A	N/A	N/A
Occupancy / Fire Barrier Separation		N/A	N/A		N/A	N/A	N/A
Party / Fire Wall Separation		N/A	N/A		N/A	N/A	N/A
Smoke Barrier Separation		N/A	N/A		N/A	N/A	N/A
Tenant / Dwelling Unit / Sleeping Unit Separation		N/A	N/A		N/A	N/A	N/A
Incidental Use Separation		N/A	N/A		N/A	N/A	N/A

* Indicate section number permitting reduction

PERCENTAGE OF WALL OPENING CALCULATIONS

Fire Separation Distance (Feet) From Property Lines	Degree of Openings Protection (Table 705.8)	Allowable Area (%)	Actual Shown on Plans (%)
--	--	--	--
--	--	--	--

LIFE SAFETY SYSTEM REQUIREMENTS

Emergency Lighting: ■ Yes ☐ No
Exit Signs: ■ Yes ☐ No
Fire Alarm: ■ Yes ☐ No
Smoke Detection Systems: ■ Yes ☐ No
Carbon Monoxide Protection: ☐ Yes ■ No

LIFE SAFETY PLAN REQUIREMENTS

Life safety Plan Sheet # BC1.3

☐ Fire and / or smoke rated wall locations (Chapter 7)
☐ Assumed and real property line locations (if not on site plan)
☐ Exterior wall opening area with respect to distance to assumed property lines (705.8)
☐ Occupancy Use for each area as it relates to occupant load calculation (Table 1004.1.2)
☐ Occupants loads for each area
■ Exit access travel distances (1017)
■ Common path of travel distances (Tables 1006.2.1 & 1006.3.2)
☐ Dead end lengths (1020.4)
☐ Clear exit widths for each exit door
☐ Maximum calculated occupant load capacity each exit door can accommodate based on egress width (1005.3)
■ Actual occupant load for each exit door
☐ A seperate schematic plan indicating where fire rated floor/ceiling and/or roof structure is provided for purposes of occupancy separation
☐ Location of doors with panic hardware (1010.1.10)
☐ Location of doors with delayed egress locks and the amount of delay (1010.1.9.7)
☐ Location of doors with electromagnetic egress locks (1010.1.9.9)
☐ Location of doors equipped with hold open devices
☐ Location of emergency escape windows (1030)
☐ The square footage of each fire area (202)
☐ The square footage of each smoke compartment for Occupancy Classification I-2 (407.5)
☐ Note any code exceptions or table notes that may have been utilized regarding the items above

ACCESSIBLE DWELLING UNITS
(SECTION 1107)

TOTAL UNITS	ACCESSIBLE UNITS REQUIRED	ACCESSIBLE UNITS PROVIDED	TYPE A UNITS REQUIRED	TYPE A UNITS PROVIDED	TYPE B UNITS REQUIRED	TYPE B UNITS PROVIDED	TOTAL ACCESSIBLE UNITS PROVIDED
NA	.	.	.	.	.	.	.

ACCESSIBLE PARKING
(SECTION 1106)

LOT OR PARKING AREA	TOTAL # OF PARKING SPACES REQUIRED	TOTAL # OF PARKING SPACES PROVIDED	# OF ACCESSIBLE SPACES PROVIDED: REGULAR WITH 5' ACCESS AISLE	VAN SPACES WITH 132" ACCESS AISLE	VAN SPACES WITH 8' ACCESS AISLE	TOTAL # ACCESSIBLE PROVIDED
TOTAL						

PLUMBING FIXTURE REQUIREMENTS
(TABLE 2902.1)

USE		WATERCLOSETS MALE	WATERCLOSETS FEMALE	WATERCLOSETS UNISEX	URINALS	LAVATORIES MALE	LAVATORIES FEMALE	LAVATORIES UNISEX	SHOWERS/ TUBS	DRINKING FOUNTAINS REGULAR	DRINKING FOUNTAINS ACCESSIBLE
SPACE	EXIST'G										
	NEW	N/A	N/A	N/A	N/A	N/A	N/A	N/A	N/A	N/A	N/A
	REQUIRED	--									

SPECIAL APPROVALS

Special approval: (Local Jurisdiction, Department of Insurance, OSC, DPI, DHHS, etc., describe below)

STRUCTURAL DESIGN
(REFER TO STRUCTURAL DRAWINGS FOR COMPLIANCE INFORMATION)

DESIGN LOADS:
Importance Factors: Wind (I_W) ____ Snow (I_S) ____ Seismic (I_E) ____
Live Loads: Roof ____ psf Mezzanine ____ psf Floor ____ psf
Ground Snow Loads: ____ psf
Wind Loads: Basic Wind Speed ____ mph (ASCE-7) Exposure Category ____

SEISMIC DESIGN CATEGORY ☐ A ☐ B ☐ C ☐ D
Provide the following Seismic Design Parameters:
Occupancy Category (Table 1604.5) ☐ I ☐ II ☐ III ☐ IV
Spectral Response Acceleration S_S ____%g S_1 ____%g
Site Classification (ASCE 7) ☐ A ☐ B ☐ C ☐ D ☐ E ☐ F
Data Source: ☐ Field Test ☐ Presumptive ☐ Historical Data
Basic structural system (check one)
☐ Bearing Wall ☐ Dual w/Special Moment Frame
☐ Building Frame ☐ Dual w/Intermediate R/C or Special Steel
☐ Moment Frame ☐ Inverted Pendulum
Analysis Procedure ☐ Simplified ☐ Equivalent Lateral Force ☐ Dynamic
Architectural, Mechanical, Components anchored? ☐ Yes ☐ No
LATERAL DESIGN CONTROL: Earthquake ☐ Wind ☐
SOIL BEARING CAPACITIES:
Field Test (provide copy of test report) ____ psf
Presumptive Bearing capacity ____ psf
Pile size, type, and capacity ____

MECHANICAL SUMMARY

(REFER TO MECHANICAL DRAWINGS FOR COMPLIANCE INFORMATION)

ELECTRICAL SUMMARY

(REFER TO ELECTRICAL DRAWINGS FOR COMPLIANCE INFORMATION)

ENERGY SUMMARY

(N/A - THIS BUILDING IS NOT REGULARLY OCCUPIED)

CBSA Architects
Architecture • Planning • Interior Design
www.cbsa-architects.com
post office box 1239
226 second street nw
hickory, north carolina 28601
phone (828) 322-3403
fax (828) 322-1802
email cbsa@cbsa-architects.com

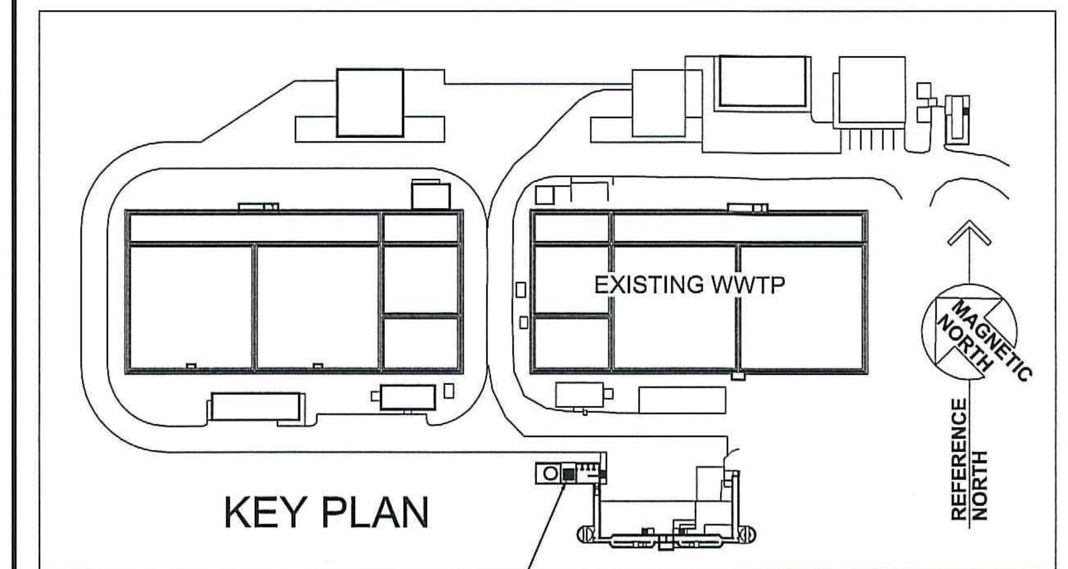

KEY PLAN

CHEMICAL FEED BUILDING

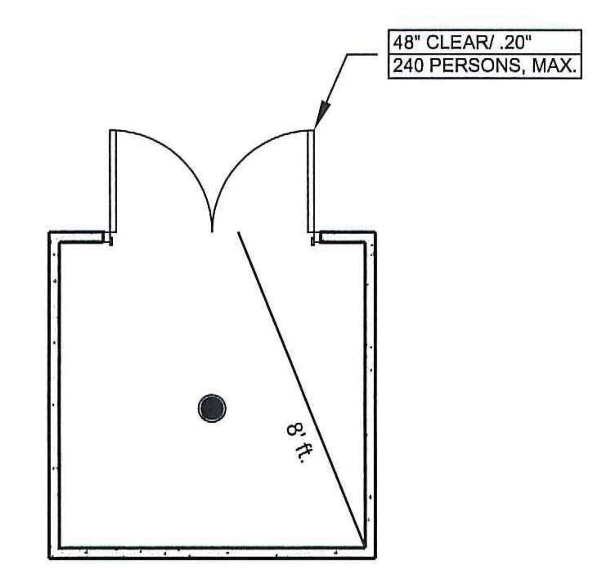

LIFE SAFETY PLAN
SCALE: 1/4" = 1'-0"

FINAL DRAWINGS - - NOT RELEASED FOR CONSTRUCTION

WK DICKSON
community infrastructure consultants
616 COLONNADE DRIVE
CHARLOTTE, NC 28205
(t)704-334-5348
(f)704-334-0078
WWW.WKDICKSON.COM
NC LICENSE NO.F-0374

JOHN STEVEN WALKER REGISTERED ARCHITECT 4814 NORTH CAROLINA HICKORY, N.C. 9/17/2019
PROFESSIONAL SEAL

REVISION RECORD

NO.	DATE	DESCRIPTION	BY

PROJECT NAME: KILLIAN CREEK WWTP PHASE 3 UPGRADE
DRAWING TITLE: APPENDIX B - CHEMICAL FEED BUILDING #8

PROJ. MGR.:	CRF
DESIGN BY:	CRF
DRAWN BY:	
PROJ. DATE:	07-25-18

DRAWING NUMBER: 8.A-A.1
WKD PROJ. NO.: 20170294.00.CL

COPYRIGHT © W.K. DICKSON & CO., INC., ALL RIGHTS RESERVED. REPRODUCTION OR USE OF THIS CONTENT OF THIS DOCUMENT, ADDITIONS OR ALTERATIONS TO THIS DOCUMENT, IN WHOLE OR IN PART, WITHOUT WRITTEN CONSENT OF W.K. DICKSON & CO., INC., IS PROHIBITED. ONLY PRINTS FROM THE ORIGINAL OF THIS DOCUMENT, MARKED WITH AN ORIGINAL SIGNATURE AND SEAL, SHALL BE CONSIDERED TO BE VALID, TRUE COPIES.

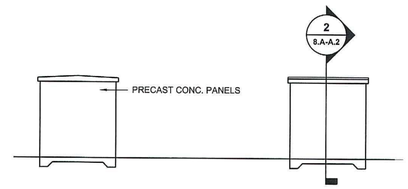

5 ELEVATION
8.A-A.2 SCALE: 1/8" = 1'- 0"

4 ELEVATION
8.A-A.2 SCALE: 1/8" = 1'- 0"

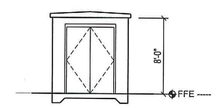

3 ELEVATION
8.A-A.2 SCALE: 1/8" = 1'- 0"

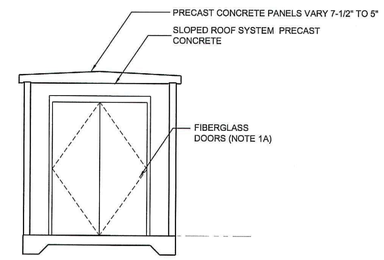

2 SECTION
8.A-A.2 SCALE: 1/4" = 1'- 0"

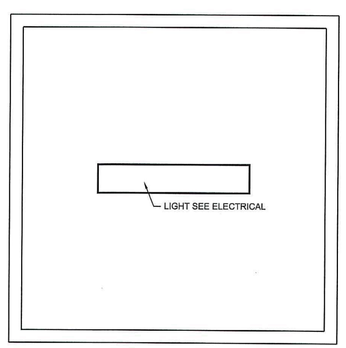

7 REFLECTED CEILING PLAN
8.A-A.2 SCALE: 1/2" = 1'- 0"

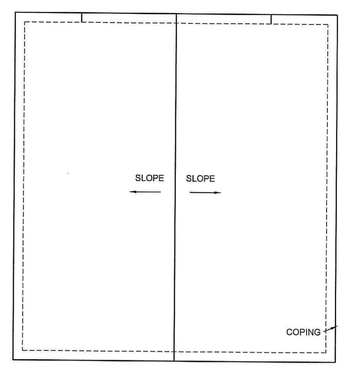

6 ROOF PLAN
8.A-A.2 SCALE: 1/2" = 1'- 0"

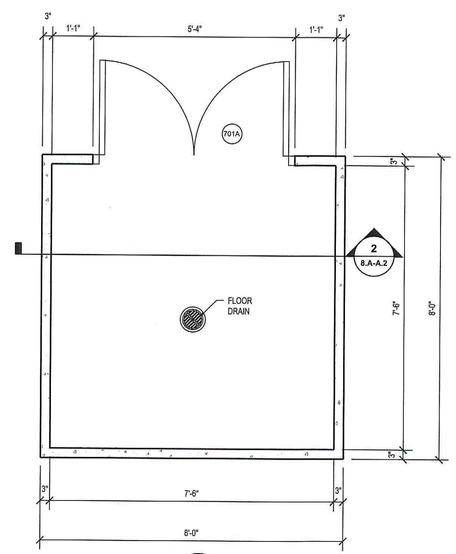

1 FLOOR PLAN
8.A-A.2 SCALE: 1/2" = 1'- 0"

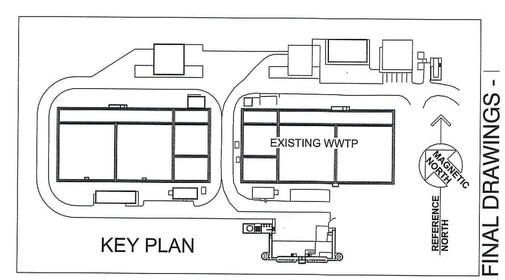

KEY PLAN

CBSA Architects
Architecture • Planning • Interior Design
www.cbsa-architects.com

post office box 1239
226 second street nw
hickory, north carolina 28601

phone (828) 322-3403
fax (828) 322-1802
email cbsa@cbsa-architects.com
2017.016

NOTES

1 - BUILDINGS #2, 3, 4, 5, 6 ARE SIMILAR IN CONSTRUCTION AND DETAILS. TYPICAL INFORMATION IS SHOWN ON COMMON INFORMATION (SECTION 7 OF THESE DRAWINGS) INCLUDING:

A - DOOR SCHEDULE
B - BUILDING TYPICAL DETAILS
C - TOILET ACCESSORIES

2 - BUILDINGS #3, 4, 5, 6 ARE HOUSINGS FOR PROCESS EQUIPMENT AND PRICING, WHICH IS SHOWN "GHOSTED" ON ARCHITECTURAL DRAWINGS, AND IS DEFINED IN MORE DETAIL ON "G" SERIES DRAWINGS WHICH WILL GOVERN THE FOLLOWING ITEMS:

A - EQUIPMENT LAYOUT AND MOUNTING PADS
B - FLOOR CAPACITY
C - FLOOR AND WALL PENETRATIONS
D - FLOOR DRAINS, PITS, GRATES, SLOPES

OTHER DRAWINGS (S, P, M, E) ARE ALSO BASED UPON "G" SERIES DRAWINGS.

3 - PRECAST CONCRETE PENETRATIONS (4" O/C OR GREATER) ARE TO BE FACTORY CAST. SIZES AND LOCATIONS SHOWN ON DRAWINGS ARE FOR BID PURPOSES, AND ARE SUBJECT TO CHANGE IN SHOP DRAWING REVIEW AND COORDINATION OF OTHER PROJECT SYSTEMS.

SMALLER PRECAST CONCRETE PENETRATIONS ARE TO BE FIELD LOCATED BY THE GENERAL CONTRACTOR AND CORE-DRILLED BY THE PRECAST CONCRETE MANUFACTURER.

ALL PRECAST CONCRETE PENETRATIONS ARE TO BE WATER-TIGHT BY THE CONTRACTOR OR SUBCONTRACTORS WHOSE SYSTEM REQUIRES THE OPENING.

4 - ALL CAULKING FOR PRECAST CONCRETE JOINTS (PRECAST CONCRETE/PRECAST CONCRETE AND PRECAST CONCRETE/CAST-IN-PLACE CONCRETE) IS TO BE BY PRECAST MANUFACTURER/INSTALLER. CAULKING AROUND PENETRATIONS FOR DOORS, FANS, LOUVERS, VENTS, AND PROCESS PIPING IS TO BE BY INSTALLER OF THESE SYSTEMS.

5 - FINISH FLOOR ELEVATIONS ARE SHOWN IN SITE DRAWINGS. POURED APPROACHES TO EACH BUILDING ARE TO MEET FINISH FLOOR ELEVATION AT DOORS AND SLOPE 1/4"/FOOT AWAY FROM BUILDING FOR FIRST 5'-0".

- NOT RELEASED FOR CONSTRUCTION

- FINAL DRAWINGS -

WK DICKSON
community infrastructure consultants
616 COLONNADE DRIVE
CHARLOTTE, NC 28205
(t)704-334-5348
(f)704-334-0078
WWW.WKDICKSON.COM
NC LICENSE NO.F-0374

JOHN STEVEN WALKER
REGISTERED ARCHITECT
14814
NORTH CAROLINA
HICKORY, N.C.
11/8/2018
PROFESSIONAL SEAL

NO.	DATE	DESCRIPTION	BY

REVISION RECORD

PROJECT NAME: KILLIAN CREEK WWTP PHASE 3 UPGRADE

DRAWING TITLE: CHEMICAL FEED BUILDING #8

PROJ. MGR.:	CRF
DESIGN BY:	CRF
DRAWN BY:	–
PROJ. DATE:	11-5-2018

DRAWING NUMBER: 8.A-A.2

WKD PROJ. NO.: 20170294.00.CL

COPYRIGHT © W.K. DICKSON & CO., INC., ALL RIGHTS RESERVED. REPRODUCTION OR USE OF THIS CONTENTS OF THIS DOCUMENT, IN WHOLE OR IN PART, WITHOUT WRITTEN CONSENT OF W.K. DICKSON & CO., INC., IS PROHIBITED. ONLY PRINTS OBTAINED FROM W.K. DICKSON & CO., INC. FROM THE ORIGINAL OF THIS DOCUMENT, MARKED WITH AN ORIGINAL SIGNATURE AND SEAL SHALL BE CONSIDERED TO BE VALID, TRUE COPIES.

2018 APPENDIX B
BUILDING CODE SUMMARY
FOR ALL COMMERCIAL PROJECTS
(Except 1 and 2 - Family Dwellings and Townhouses)

Name of Project: KILLIAN CREEK WASTEWATER TREATMENT PLANT - EFFLUENT FILTER BUILDING
Address: 6769 OLD PLANK ROAD, STANLEY, N.C. Zip Code 28164
Proposed Use: WASTEWATER TREATMENT
Owner or Authorized Agent: DON CHAMBLEE Phone: - Email -
Owned By: ■ City/County ☐ Private ☐ State
Code Enforcement Jurisdiction: ☐ City - ■ County LINCOLN ☐ State

CONTACT

DESIGNER	FIRM	NAME	LICENSE #	TELEPHONE #	EMAIL
Architectural	CBSA ARCHITECTS	J. STEVEN WALKER	4814	828 332-3403	cbsa@cbsa-architects.com
Civil	W.K. DICKSON	CHARLES R FRONEBERGER	8802	704 334-5348	
Electrical	BRITTAIN ENGINEERING	DONALD R. BRITTAIN, PE	7883	828-328-1813	
Fire Alarm	BRITTAIN ENGINEERING	DONALD R. BRITTAIN, PE	7883	828-328-1813	
Plumbing	BRITTAIN ENGINEERING	DONALD R. BRITTAIN, PE	7883	828-328-1813	
Mechanical	BRITTAIN ENGINEERING	DONALD R. BRITTAIN, PE	7883	828-328-1813	
Sprinkler-Standpipe	N/A	N/A	N/A	N/A	
Structural	STEWART ENGINEERING	MICHAEL A. GARDINA, PE	024096	704-334-725	
Retaining Wall >5' High	N/A	N/A			
Other					

2018 NC BUILDING CODE: ■ New Building ☐ Shell / Core ☐ 1st Time Interior Completions ☐ Addition ☐ Phased Construction - Shell Core

2018 NC EXISTING BUILDING CODE: (check all that apply) ☐ Prescriptive ☐ Repair ☐ Chapter 14 ☐ Alteration Level I ☐ Alteration Level II ☐ Alteration Level III ☐ Historic Property ☐ Change of Use

CONSTRUCTED: (Date) -- CURRENT OCCUPANCY(S) (CH. 3) --
RENOVATED: (Date) -- PROPOSED OCCUPANCY(S) (CH. 3) --
OCCUPANCY CATEGORY (Table 1604.5): Current: -- Proposed: --

BASIC BUILDING DATA:
Construction Type: (check all that apply) ☐ I-A ☐ I-B ☐ II-A ■ II-B ☐ III-A ☐ III-B ☐ IV ☐ V-A ☐ V-B
Sprinklers ■ No ☐ Partial ☐ Yes ☐ NFPA 13 ☐ NFPA 13R ☐ NFPA 13D
Standpipes: ■ No ☐ Yes Class ☐ I ☐ II ☐ III ☐ Wet ☐ Dry
Primary Fire District: ■ No ☐ Yes Flood Hazard Area: ☐ No ☐ Yes
Special Inspections Required: ☐ No ☐ Yes

GROSS BUILDING AREA TABLE

Floor	Existing (SQ FT)	New (SQ FT)	Sub-Total
3rd Floor			
2nd Floor			
Mezzanine			
1st Floor	--	2800	2800
Basement			
TOTAL	--	--	2800

ALLOWABLE AREA

Primary Occupancy Classification(s):
Assembly ☐ A-1 ☐ A-2 ☐ A-3 ☐ A-4 ☐ A-5
Business ☐
Educational ☐
Factory ☐ F-1 Moderate ☐ F-2 Low
Hazardous ☐ H-1 Detonate ☐ H-2 Deflagrate ☐ H-3 Combust ☐ H-4 Health ☐ H-5 HPM
Institutional ☐ I-1 ☐ I-2 ☐ I-3 ☐ I-4
I-1 Condition ☐ 1 ☐ 2
I-2 Condition ☐ 1 ☐ 2
I-3 Condition ☐ 1 ☐ 2 ☐ 3 ☐ 4 ☐ 5
Mercantile ☐
Residential ☐ R-1 ☐ R-2 ☐ R-3 ☐ R-4
Storage ☐ S-1 Moderate ☐ S-2 Low ☐ High Piled ☐ Parking Garage ☐ Open ☐ Enclosed ☐ Repair Garage
Utility and Miscellaneous ■

Accessory Occupancy Classification(s):
Incidental Uses (Table 509):
This separation is not exempt as a Non-Separated Use (see exceptions).
Special Uses (Chapter 4 - List Code Sections):
Special Provisions (Chapter 5 - List Code Sections):
Mixed Occupancy: ■ No ☐ Yes Separation: ____ Hr. Exception:

$$\frac{\text{Actual Area of Occupancy A}}{\text{Allowable Area of Occupancy A}} + \frac{\text{Actual Area of Occupancy B}}{\text{Allowable Area of Occupancy B}} \leq 1$$

$$\_\_\_\_ + \_\_\_\_ + \ldots\ldots = \_\_\_\_ \leq 1.00$$

STORY NO.	DESCRIPTION AND USE	(A) BLDG AREA PER STORY (ACTUAL)	(B) TABLE 506.2[4] AREA	(C) AREA FOR FRONTAGE INCREASE	(D) ALLOWABLE AREA OR UNLIMITED [2]
ONE	U	2800	8500	8500	8500

[1] Frontage area increases from Section 506.2 are computed thus:
a. Perimeter which fronts a public way or open space having 20 feet minimum width = ____ (F)
b. Total Building Perimeter = ____ (P)
c. Ratio (F/P) = ____ (F/P)
d. W = Minimum width of public way = ____ (W)

[2] Unlimited area applicable under conditions of Section 507.
[3] Maximum Building Area = total number of stories in the building x D (maximum 3 stories) (506.2).
[4] The maximum area of open parking garages must comply with 406.5.4. The maximum area of the air traffic control towers must comply with 412.3.1.
[5] Frontage increase is based on the unsprinklered area value in Table 506.2.

ALLOWABLE HEIGHT

	ALLOWABLE	SHOWN ON PLANS	CODE REFERENCE
Building Height in Feet (Table 504.3)	55'	24'	--
Building Height in Stories (Table 504.4)	2	1	--

[1] Provide code reference if the "Shown on Plans" quantity is not based on Table 504.3 or 504.4

FIRE PROTECTION REQUIREMENTS

BUILDING ELEMENT	FIRE SEPARATION DISTANCE (FEET)	RATING REQ'D	RATING PROVIDED (W/ * REDUCTION)	DETAIL # AND SHEET #	DESIGN # FOR RATED ASSEMBLY	DESIGN # FOR RATED PENETRATION	DESIGN # FOR RATED JOINTS
Structural frame, including columns, girders, trusses		0	0		N/A	N/A	N/A
Bearing walls		0	0		N/A	N/A	N/A
Exterior		0	0		N/A	N/A	N/A
North	--	0	0		N/A	N/A	N/A
East		0	0		N/A	N/A	N/A
West		0	0		N/A	N/A	N/A
South		0	0		N/A	N/A	N/A
Interior		N/A	N/A		N/A	N/A	N/A
Nonbearing walls and partitions Exterior							
North	N/A	N/A	N/A		N/A	N/A	N/A
East	N/A	N/A	N/A		N/A	N/A	N/A
West	N/A	N/A	N/A		N/A	N/A	N/A
South	N/A	N/A	N/A		N/A	N/A	N/A
Interior walls and partitions	N/A	N/A	N/A		N/A	N/A	N/A
Floor construction Including supporting beams and joists		0	0		N/A	N/A	N/A
Floor Ceiling Assembly							
Columns Supporting Floors							
Roof construction Including supporting beams and joists		0	0		N/A	N/A	N/A
Roof Ceiling Assembly		N/A	N/A		N/A	N/A	N/A
Columns Supporting Roof		N/A	N/A		N/A	N/A	N/A
Shaft Enclosures- Exit		N/A	N/A		N/A	N/A	N/A
Shaft Enclosures- Other		N/A	N/A		N/A	N/A	N/A
Corridor Separation		N/A	N/A		N/A	N/A	N/A
Occupancy / Fire Barrier Separation		N/A	N/A		N/A	N/A	N/A
Party / Fire Wall Separation		N/A	N/A		N/A	N/A	N/A
Smoke Barrier Separation		N/A	N/A		N/A	N/A	N/A
Tenant / Dwelling Unit / Sleeping Unit Separation		N/A	N/A		N/A	N/A	N/A
Incidental Use Separation		N/A	N/A		N/A	N/A	N/A

* Indicate section number permitting reduction

PERCENTAGE OF WALL OPENING CALCULATIONS

Fire Separation Distance (Feet) From Property Lines	Degree of Openings Protection (Table 705.8)	Allowable Area (%)	Actual Shown on Plans (%)
--	--	--	--
--	--	--	--

LIFE SAFETY SYSTEM REQUIREMENTS

Emergency Lighting: ■ Yes ☐ No
Exit Signs: ■ Yes ☐ No
Fire Alarm: ☐ Yes ■ No
Smoke Detection Systems: ☐ Yes ■ No
Carbon Monoxide Protection: ☐ Yes ■ No

LIFE SAFETY PLAN REQUIREMENTS

Life safety Plan Sheet # BC1.4

☐ Fire and / or smoke rated wall locations (Chapter 7)
☐ Assumed and real property line locations (if not on site plan)
☐ Exterior wall opening area with respect to distance to assumed property lines (705.8)
☐ Occupancy Use for each area as it relates to occupant load calculation (Table 1004.1.2)
☐ Occupants loads for each area
■ Exit access travel distances (1017)
■ Common path of travel distances (Tables 1006.2.1 & 1006.3.2)
☐ Dead end lengths (1020.4)
☐ Clear exit widths for each exit door
☐ Maximum calculated occupant load capacity each exit door can accommodate based on egress width (1005.3)
■ Actual occupant load for each exit door
☐ A seperate schematic plan indicating where fire rated floor/ceiling and/or roof structure is provided for purposes of occupancy separation
☐ Location of doors with panic hardware (1010.1.10)
☐ Location of doors with delayed egress locks and the amount of delay (1010.1.9.7)
☐ Location of doors with electromagnetic egress locks (1010.1.9.9)
☐ Location of doors equipped with hold open devices
☐ Location of emergency escape windows (1030)
☐ The square footage of each fire area (202)
☐ The square footage of each smoke compartment for Occupancy Classification I-2 (407.5)
☐ Note any code exceptions or table notes that may have been utilized regarding the items above

ACCESSIBLE DWELLING UNITS
(SECTION 1107)

TOTAL UNITS	ACCESSIBLE UNITS REQUIRED	ACCESSIBLE UNITS PROVIDED	TYPE A UNITS REQUIRED	TYPE A UNITS PROVIDED	TYPE B UNITS REQUIRED	TYPE B UNITS PROVIDED	TOTAL ACCESSIBLE UNITS PROVIDED
NA	-	-	-	-	-	-	-

ACCESSIBLE PARKING
(SECTION 1106)

LOT OR PARKING AREA	TOTAL # OF PARKING SPACES REQUIRED	TOTAL # OF PARKING SPACES PROVIDED	# OF ACCESSIBLE SPACES PROVIDED: REGULAR WITH 5' ACCESS AISLE	VAN SPACES WITH 132" ACCESS AISLE	VAN SPACES WITH 8' ACCESS AISLE	TOTAL # ACCESSIBLE PROVIDED
	-					
	-					
TOTAL	*					

* - THIS BUILDING DOES NOT REQUIRE PARKING

PLUMBING FIXTURE REQUIREMENTS
(TABLE 2902.1)

USE		WATERCLOSETS MALE	WATERCLOSETS FEMALE	WATERCLOSETS UNISEX	URINALS	LAVATORIES MALE	LAVATORIES FEMALE	LAVATORIES UNISEX	SHOWERS/ TUBS	DRINKING FOUNTAINS REGULAR	DRINKING FOUNTAINS ACCESSIBLE
SPACE	EXISTG NEW	N/A	N/A	N/A	N/A	N/A	N/A	N/A	N/A	N/A	N/A
	REQUIRED	--									

SPECIAL APPROVALS

Special approval: (Local Jurisdiction, Department of Insurance, OSC, DPI, DHHS, etc., describe below)

STRUCTURAL DESIGN
(REFER TO STRUCTURAL DRAWINGS FOR COMPLIANCE INFORMATION)

DESIGN LOADS:

Importance Factors: Wind (I_w) ____ Snow (I_s) ____ Seismic (I_E) ____

Live Loads: Roof ____ psf Mezzanine ____ psf Floor ____ psf

Ground Snow Loads: ____ psf

Wind Loads: Basic Wind Speed ____ mph (ASCE-7) Exposure Category ____

SEISMIC DESIGN CATEGORY ☐ A ☐ B ☐ C ☐ D
Provide the following Seismic Design Parameters:
Occupancy Category (Table 1604.5) ☐ I ☐ II ☐ III ☐ IV
Spectral Response Acceleration S_S____%g S_1____%g
Site Classification (ASCE 7) ☐ A ☐ B ☐ C ☐ D ☐ E ☐ F
Data Source: ☐ Field Test ☐ Presumptive ☐ Historical Data
Basic structural system (check one)
☐ Bearing Wall ☐ Dual w/Special Moment Frame
☐ Building Frame ☐ Dual w/Intermediate R/C or Special Steel
☐ Moment Frame ☐ Inverted Pendulum
Analysis Procedure ☐ Simplified ☐ Equivalent Lateral Force ☐ Dynamic
Architectural, Mechanical, Components anchored? ☐ Yes ☐ No
LATERAL DESIGN CONTROL: Earthquake ☐ Wind ☐
SOIL BEARING CAPACITIES:
Field Test (provide copy of test report) ____ psf
Presumptive Bearing capacity ____ psf
Pile size, type, and capacity ____

MECHANICAL SUMMARY
(REFER TO MECHANICAL DRAWINGS FOR COMPLIANCE INFORMATION)

ELECTRICAL SUMMARY
(REFER TO ELECTRICAL DRAWINGS FOR COMPLIANCE INFORMATION)

ENERGY SUMMARY
ENERGY REQUIREMENTS

The following data shall be considered minimum and any special attribute required to meet the energy code shall also be provided. Each Designer shall furnish the required portions of the project information for the plan data sheet. If energy cost budget method, state the annual energy cost budget vs allowable annual energy cost budget.

CBSA Architects
Architecture • Planning • Interior Design
www.cbsa-architects.com
post office box 1239
226 second street nw
hickory, north carolina 28601
phone (828) 322-3403
fax (828) 322-1802
email cbsa@cbsa-architects.com

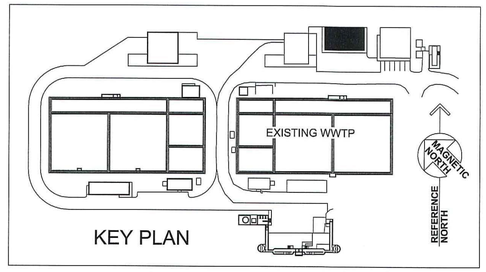

KEY PLAN

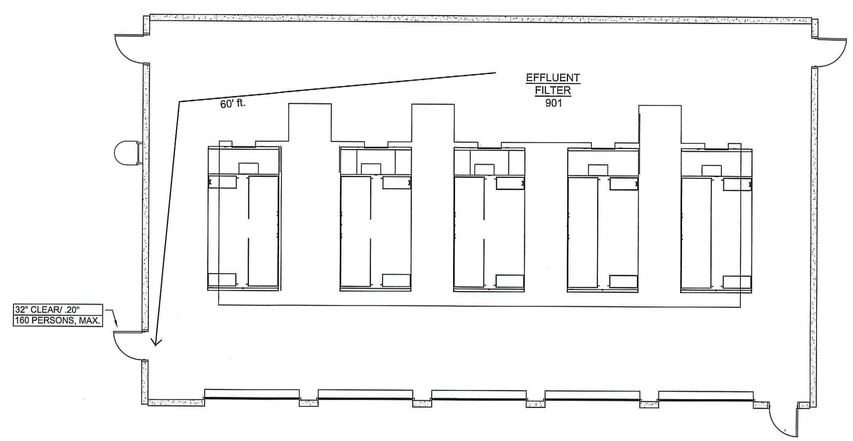

LIFE SAFETY PLAN
SCALE: 1/8" = 1'-0"

WK DICKSON
community infrastructure consultants
616 COLONNADE DRIVE
CHARLOTTE, NC 28205
(t)704-334-5348
(f)704-334-0078
WWW.WKDICKSON.COM
NC LICENSE NO.F-0374

JOHN STEVEN WALKER REGISTERED ARCHITECT 4814 NORTH CAROLINA HICKORY, N.C.
9/7/2019
PROFESSIONAL SEAL

NO.	DATE	DESCRIPTION	BY

REVISION RECORD

- NOT RELEASED FOR CONSTRUCTION -

FINAL DRAWINGS -

PROJECT NAME: KILLIAN CREEK WWTP PHASE 3 UPGRADE

DRAWING TITLE: APPENDIX B - EFFLUENT FILTER BUILDING #9

PROJ. MGR.:	CRF
DESIGN BY:	CRF
DRAWN BY:	
PROJ. DATE:	07-25-18

DRAWING NUMBER: 9.A-A.1
WKD PROJ. NO.: 20170294.00.CL

COPYRIGHT © W.K. DICKSON & CO., INC. & CBSA ARCHITECTS, 2018
THIS DOCUMENT IS THE PROPERTY OF THE COMPANIES LISTED ABOVE AND IS NOT TO BE REPRODUCED OR TRANSMITTED IN WHOLE OR IN PART, WITHOUT WRITTEN CONSENT OF W.K. DICKSON & CO., INC. OR CBSA ARCHITECTS, INC. WHICH MAY BE WITHHELD FOR ANY REASON. THE REPRODUCTION OR UNAUTHORIZED USE OF THIS DOCUMENT WITHOUT WRITTEN CONSENT MAY ALSO BE CONTRARY TO LAW AND SUBJECT TO SUCH LEGAL SANCTIONS AS MAY BE IMPOSED BY THE COURTS.

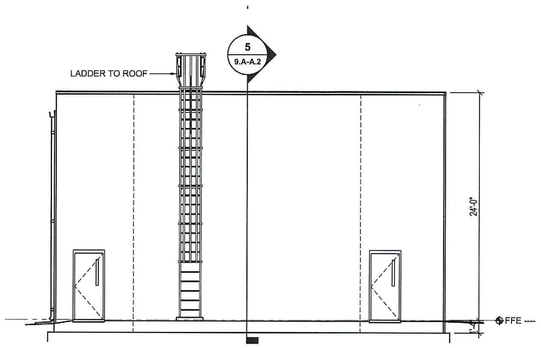

8 ELEVATION
9.A-A.2 SCALE: 1/8" = 1'- 0"

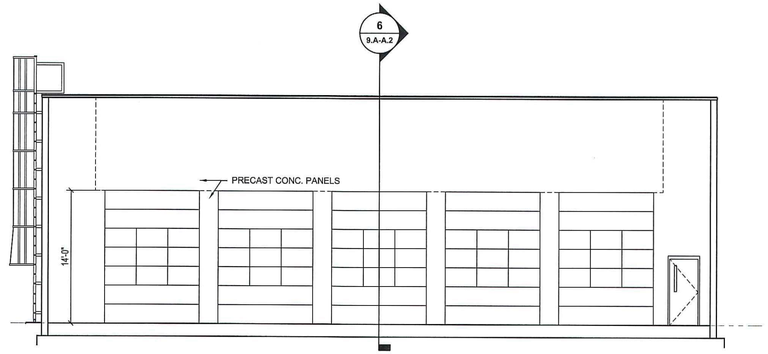

7 ELEVATION
9.A-A.2 SCALE: 1/8" = 1'- 0"

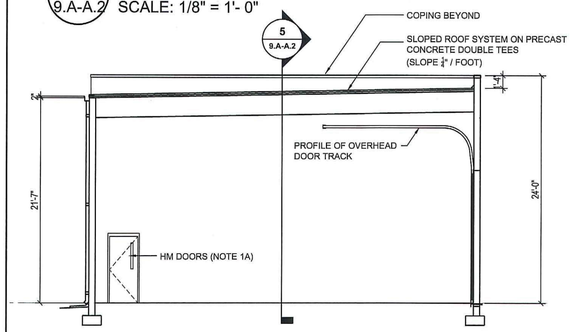

6 SECTION
9.A-A.2 SCALE: 1/8" = 1'- 0"

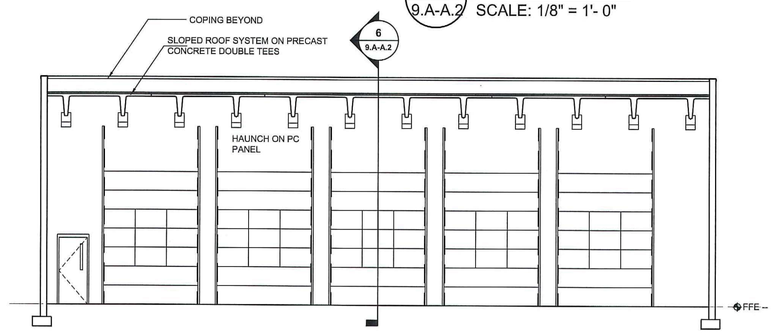

5 SECTION
9.A.A.2 SCALE: 1/8" = 1'- 0"

NOTES

1 - BUILDINGS #2, 3, 4, 5, 6 ARE SIMILAR IN CONSTRUCTION AND DETAILS. TYPICAL INFORMATION IS SHOWN ON COMMON INFORMATION (SECTION 7 OF THESE DRAWINGS) INCLUDING:

A - DOOR SCHEDULE
B - BUILDING TYPICAL DETAILS
C - TOILET ACCESSORIES

2 - BUILDINGS #3, 4, 5, 6 ARE HOUSINGS FOR PROCESS EQUIPMENT AND PRICING, WHICH IS SHOWN "GHOSTED" ON ARCHITECTURAL DRAWINGS, AND IS DEFINED IN MORE DETAIL ON "G" SERIES DRAWINGS WHICH WILL GOVERN THE FOLLOWING ITEMS:

A - EQUIPMENT LAYOUT AND MOUNTING PADS
B - FLOOR CAPACITY
C - FLOOR AND WALL PENETRATIONS
D - FLOOR DRAINS, PITS, GRATES, SLOPES

OTHER DRAWINGS (S, P, M, E) ARE ALSO BASED UPON "G" SERIES DRAWINGS.

3 - PRECAST CONCRETE PENETRATIONS (4" O/C OR GREATER) ARE TO BE FACTORY CAST. SIZES AND LOCATIONS SHOWN ON DRAWINGS ARE FOR BID PURPOSES, AND ARE SUBJECT TO CHANGE IN SHOP DRAWING REVIEW AND COORDINATION OF OTHER PROJECT SYSTEMS.

SMALLER PRECAST CONCRETE PENETRATIONS ARE TO BE FIELD LOCATED BY THE GENERAL CONTRACTOR AND CORE-DRILLED BY THE PRECAST CONCRETE MANUFACTURER.

ALL PRECAST CONCRETE PENETRATIONS ARE TO BE WATER-TIGHT BY THE CONTRACTOR OR SUBCONTRACTORS WHOSE SYSTEM REQUIRES THE OPENING.

4 - ALL CAULKING FOR PRECAST CONCRETE JOINTS (PRECAST CONCRETE/PRECAST CONCRETE AND PRECAST CONCRETE/CAST-IN-PLACE CONCRETE) IS TO BE BY PRECAST MANUFACTURER/INSTALLER. CAULKING AROUND PENETRATIONS FOR DOORS, FANS, LOUVERS, VENTS, AND PROCESS PIPING IS TO BE BY INSTALLER OF THESE SYSTEMS.

5 - FINISH FLOOR ELEVATIONS ARE SHOWN IN SITE DRAWINGS. POURED APPROACHES TO EACH BUILDING ARE TO MEET FINISH FLOOR ELEVATION AT DOORS AND SLOPE 1/4"/FOOT AWAY FROM BUILDING FOR FIRST 5'-0".

6 - STAIR PAN CONSTRUCTION IS 14 GAUGE STEEL BENT PLATE SUPPORT ON 1-1/4" X 1-1/4" X 1/8" SHELF ANGLES. WELD PANS TOGETHER AND FILL WITH 2" CONCRETE. SUPPORT WITH (2) C8X10 STRINGERS. WELD ATTACH HANDRAIL ON ONE SITE, ANCHOR OPPOSITE RAIL TO PRECAST WALL.

7 - REMOVABLE RAIL 1-1/2" O.D. GALVANIZED STEEL SET IN 1/4" X 10" HIGH MOUNTING BRACKETS ATTACHED TO P.I.P. WALL WITH 1/4" X 3" LONG EXPANSION SCREWS. ALL MATERIALS TO BE GALVANIZED.

CBSA Architects
Architecture • Planning • Interior Design
www.cbsa-architects.com

post office box 1239
226 second street nw
hickory, north carolina 28601

phone (828) 322-3403
fax (828) 322-1802
email cbsa@cbsa-architects.com
2017.016

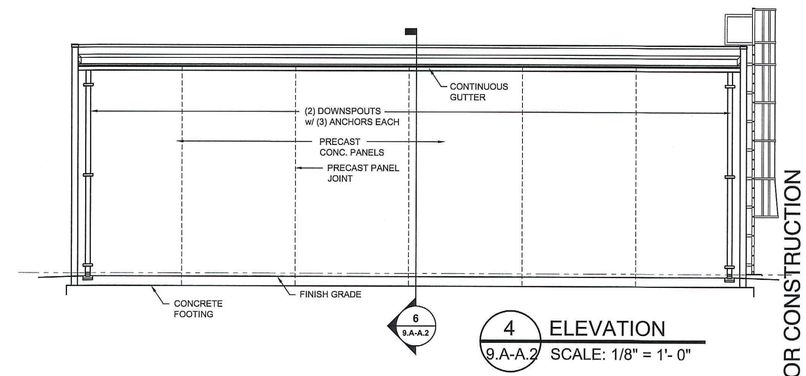

4 ELEVATION
9.A-A.2 SCALE: 1/8" = 1'- 0"

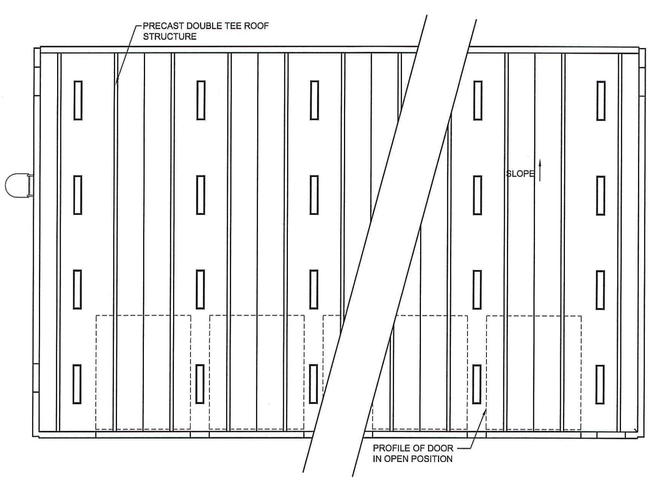

3 REFLECTED CEILING PLAN
9.A-A.2 SCALE: 1/8" = 1'- 0"

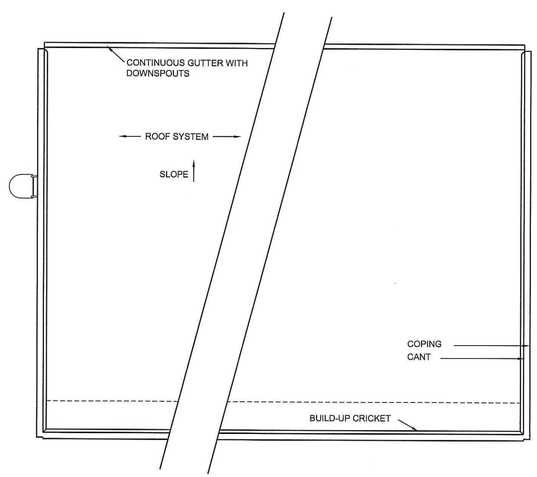

2 ROOF PLAN
9.A-A.2 SCALE: 1/8" = 1'- 0"

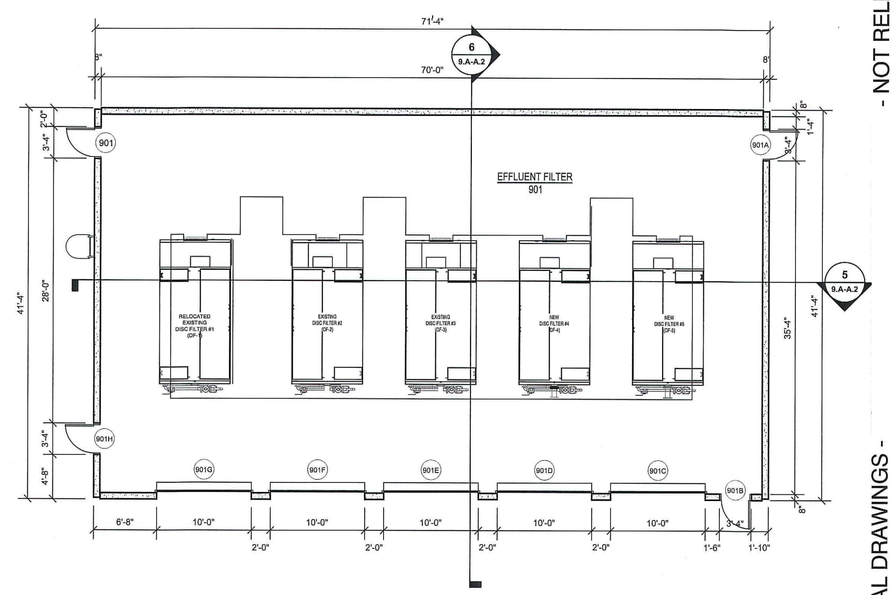

1 FLOOR PLAN
9.A-A.2 SCALE: 1/8" = 1'- 0"

FINAL DRAWINGS - NOT RELEASED FOR CONSTRUCTION

WK DICKSON
community infrastructure consultants
616 COLONNADE DRIVE
CHARLOTTE, NC 28205
(t)704-334-5348
(f)704-334-0078
WWW.WKDICKSON.COM
NC LICENSE NO.F-0374

JOHN STEVEN WALKER
REGISTERED ARCHITECT
4814
NORTH CAROLINA
HICKORY, NC
9/17/2019
PROFESSIONAL SEAL

NO.	DATE	DESCRIPTION	BY

REVISION RECORD

PROJECT NAME: KILLIAN CREEK WWTP PHASE 3 UPGRADE

DRAWING TITLE: EFFLUENT FILTER BUILDING #9

PROJ. MGR.:	CRF
DESIGN BY:	CRF
DRAWN BY:	--
PROJ. DATE:	11-5-2018

DRAWING NUMBER: 9.A-A.2

WKD PROJ. NO.: 20170294.00.CL

COPYRIGHT ©, W.K. DICKSON & CO., INC. ALL RIGHTS RESERVED. REPRODUCTION OR USE OF THE CONTENTS OF THIS DOCUMENT, ADDITIONS OR DELETIONS TO THIS DOCUMENT, IN WHOLE OR IN PART, WITHOUT WRITTEN CONSENT OF W.K. DICKSON & CO., INC., IS PROHIBITED. ONLY COPIES FROM THE ORIGINAL OF THIS DOCUMENT, MARKED WITH AN ORIGINAL SIGNATURE AND SEAL SHALL BE CONSIDERED TO BE VALID, TRUE COPIES.

DOOR, FRAME AND HARDWARE SCHEDULE

DOOR LEGEND:

TIG	TEMPERED INSULATING GLASS
TG	TEMPERED GLASS
PR	PAIR
HM	HOLLOW METAL-INSULATED
SCWD	SOLID CORE WOOD DOOR
DE	DOUBLE EGRESS
CG	CERAMIC FIRE RATED GLASS
VOE	OVERHEAD DOORS
CO	CASED OPENING
FRP	FIBER REINFORCED PLASTIC

HARDWARE LEGEND:

ET	ENTRANCE
OFF	OFFICE
ST	STORAGE
PV	PRIVACY
CR	CLASSROOM
PA	PASSAGE
ED	RIM TYPE EXIT DEVICE

DOOR NOTES:

① -
② -
③ - ④

FRAME NOTES:

④ DOOR FRAME BY DOOR MANUFACTURER

HARDWARE NOTES:

⑤ SEE SPECIFICATIONS - ALL HARDWARE TO BE ADA COMPLIANT
⑥ HARDWARE BY DOOR MANUFACTURER

LOCK TYPE: M = MORTISE; C = CYLINDERICAL; * = CYLINDER BY HARDWARE MFG

STOP: BC = BY CLOSER; W = WALL; OH = OVERHEAD

OPENING NUMBER	OPENING LABEL	DOORS TYPE	DOORS MATERIAL	DOORS SIZE	DOORS GLASS	DOORS NOTES	FRAMES TYPE	FRAMES MATERIAL	FRAMES JAMB	FRAMES HEAD	FRAMES NOTES	LOCK TYPE	EXIT DEVICE - HEAD LATCH SURFACE ROD EXTERIOR LEVER W/ CYLINDER	EXIT DEVICE - RIM & EXTERIOR PULL	EXIT DEVICE RIM - EXIT ONLY	LOCK FUNCTION	PUSH / PULL	ELECTRONIC DOOR LOCK - EXTERIOR KEY PAD	CLOSER W/ HOLD OPEN	CLOSER	KICKPLATE	FLUSHBOLTS	RECESSED DUST PROOF STRIKE	STOP	RAIN DRIP	WEATHER SEAL - ALL SIDES	THRESHOLD	REMOVABLE MULLION	POCKET DOOR TRACK, BALL BEARING ROLLERS & RECESSED PULL	ACCESSIBLITY SIGNAGE	NOTES	NUMBER
301	--	VOE-1	STEEL	10'-0" X 14'-0"	TIG	--		STEEL	--	--	--	*	--		--	--	--	--	--	--	--	--	--	--	--	●	●	--	--	--	⑤	301
301A	--	HM-1	FRP	3'-0" X 7'-0"	TG	--	F1	HM	--	--	④ --	ED	--	●	--	--	--	--	--	●	●	--	--	BC	--	●	●	--	--	--	⑥	301A
301B	VOE	HM-2	STEEL	3'-0" X 7'-0"	TIG	--	-	HM	--	--	④ --	ED	--	●	--	--	--	--	--	●	●	--	--	BC	--	--	●	--	--	--	⑥	302B
301C	--	HM-1	FRP	3'-0" X 7'-0"	TIG	--	F1	HM	--	--	④ --	ED	--	●	--	--	--	--	--	●	●	--	--	BC	--	●	●	--	--	--	⑥	302C
302	HM	HM-1	HM	3'-0" X 7'-0"	TIG	--			--	--	--	*	--	--	--	--	--	--	--	--	--	--	--	--	--	●	●	--	--	--	⑤	303D
302A			FRP	3'-0" X 7'-0"	TIG		F1							--	--	--	--															
401	--	HM-2	HM	(2)3'-0" X 8'-0"	TIG	--	F2	HM	--	--	--	ED	--	●	--	--	--	--	--	--	--	--	--	BC	--	●	●	●	--	--	⑤	401
											--																					
501	--	HM-1	HM	3'-0" X 7'-0"	TIG	--	F1	HM	--	--	--	ED	--	●	--	--	--	--	--	●	●	--	--	BC	--	●	●	--	--	--	⑤	501
501A	--	VOE-3	STEEL	12'-0" X 14'-0"	TIG	--	-	STEEL	--	--	④ --	*	--	--	--	--	--	--	--	--	--	--	--	--	--	●	●	--	--	--	⑥	501A
501B	--	VOE-3	STEEL	12'-0" X 14'-0"	TIG	--	-	STEEL	--	--	④ --	*	--	--	--	--	--	--	--	--	--	--	--	--	--	●	●	--	--	--	⑥	501B
501C	--	VOE-3	STEEL	12'-0" X 14'-0"	TIG	--	-	STEEL	--	--	④ --	*	--	--	--	--	--	--	--	--	--	--	--	--	--	●	●	--	--	--	⑥	501C
501D	--	VOE-3	STEEL	12'-0" X 14'-0"	TIG	--	-	STEEL	--	--	④ --	*	--	--	--	--	--	--	--	--	--	--	--	--	--	●	●	--	--	--	⑥	501D
501E	--	VOE-3	STEEL	12'-0" X 14'-0"	TIG	--	-	STEEL	--	--	④ --	*	--	--	--	--	--	--	--	--	--	--	--	--	--	●	●	--	--	--	⑥	501E
502	--	HM-1	HM	3'-0" X 7'-0"			F1	HM	--	--	--	PV	--	●	--	PV	--	--	--	●	●	--	--	BC	--	●	●	--	--	●	⑤	502
503	--	HM-1	HM	3'-0" X 4'-0"	TG		F1	HM	--	--	--	ST	--	--	--	ST	--	--	--	●	●	--	--	BC	--	--	--	--	--	--	⑤	503
504	--	VOE-3	STEEL	12'-0" X 14'-0"	TIG	--	-	STEEL	--	--	④ --	*	--	--	--	--	--	--	--	--	--	--	--	--	--	●	●	--	--	--	⑥	504
504A	--	HM-1	HM	3'-6" X 7'-0"	TIG		F1	HM	--	--	--	ED	--	●	--	--	--	--	--	●	●	--	--	BC	--	●	●	--	--	--	⑤	504A
504B	--	HM-1	HM	3'-0" X 7'-0"	TIG	--	F1	HM	--	--	--	ED	--	●	--	--	--	--	--	●	●	--	--	BC	--	●	●	--	--	--	⑤	504B
504C	--	VOE-3	STEEL	12'-0" X 14'-0"	TIG		-	STEEL	--	--	④	*	--	--	--	--	--	--	--	--	--	--	--	--	--	●	●	--	--	--	⑤⑥	504B
701	--	VOE-3	STEEL	8'-0" X 8'-0"	TIG	--	--	STEEL	--	--	④ --	*	--	--	--	--	--	--	--	--	--	--	--	--	--	--	--	--	--	--	--	701
701A	--	HM-1	FRP	(2) 3'-0" X 7'-0"	TIG	--	F2	HM	--	--	--	ED	--	●	--	--	--	--	--	--	--	--	--	BC	--	●	●	●	--	--	⑤	701A
801	--	VOE-1	HM	(2) 2'-6" X 7'-0"	--	--	F1	HM	--	--	--	--	--	--	--	ST	--	--	--	--	●	--	--	OH	--	●	●	●	--	--	⑤	801
901	--	HM-1	HM	3'-0" X 7'-0"	TIG	--	F1	HM	--	--	--	ED	--	●	--	--	--	--	--	●	●	--	--	BC	--	--	--	--	--	--	⑤	901
901A	--	HM-1	HM	3'-0" X 7'-0"	TIG	--	F1	HM	--	--	--	ED	--	●	--	--	--	--	--	●	●	--	--	BC	--	--	--	--	--	--	⑤	901A
901B	--	HM-1	HM	3'-0" X 7'-0"	TIG	--	F1	HM	--	--	--	ED	--	●	--	--	--	--	--	●	●	--	--	BC	--	●	--	--	--	●	⑤	901B
901C	--	VOE-3	STEEL	12'-0" X 14'-0"	TIG	--	-	STEEL	--	--	④ --	*	--	--	--	--	--	--	--	--	--	--	--	--	--	●	--	--	--	●	⑤	901C
901D	--	VOE-3	STEEL	12'-0" X 14'-0"	TIG	--	-	STEEL	--	--	④ --	*	--	--	--	--	--	--	--	--	--	--	--	--	--	--	--	--	--	--	⑤	901D
901E	--	VOE-3	STEEL	12'-0" X 14'-0"	TIG	--	-	STEEL	--	--	④ --	*	--	--	--	--	--	--	--	--	--	--	--	--	--	--	--	--	--	--	⑤	901E
901F	--	VOE-3	STEEL	12'-0" X 14'-0"	TIG	--	-	STEEL	--	--	④ --	*	--	--	--	--	--	--	--	--	--	--	--	--	--	--	--	--	--	--	⑤	901F
901G	--	VOE-3	STEEL	12'-0" X 14'-0"	TIG	--	-	STEEL	--	--	④ --	*	--	--	--	--	--	--	--	--	--	--	--	--	--	--	--	--	--	●	⑤	901G
901H	--	HM-1	HM	3'-0" X 7'-0"	TIG	--	F1	HM	--	--	--	ED	--	●	--	--	--	--	--	●	●	--	--	BC	--	--	--	--	--	--	⑤	901H

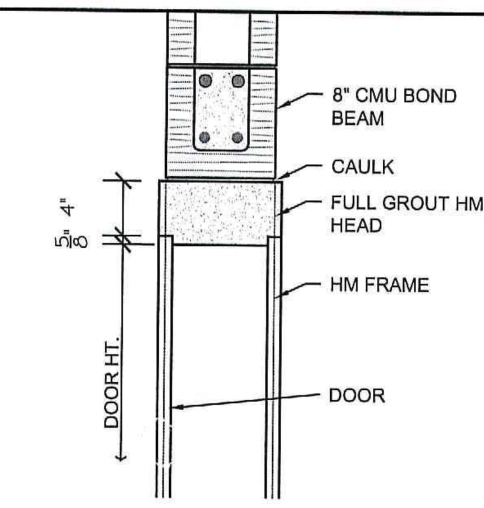

HEAD @ PED DOOR @ CMU

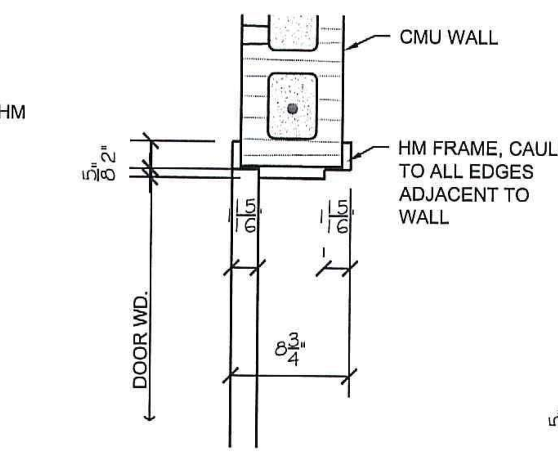

JAMB @ PED DOOR @ CMU

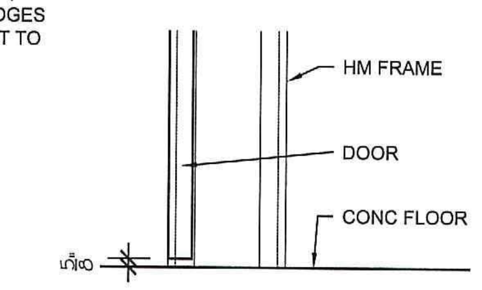

SILL @ PED DOOR @ CMU

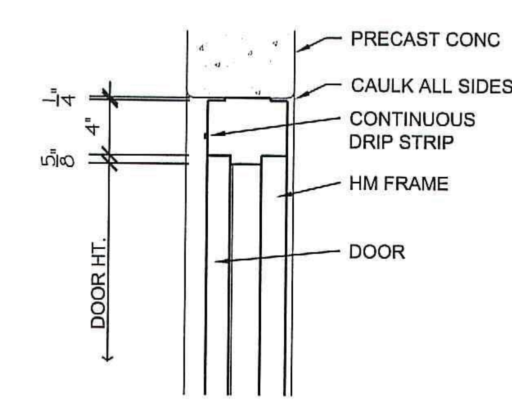

HEAD @ PED DOOR @ PRECAST CONC

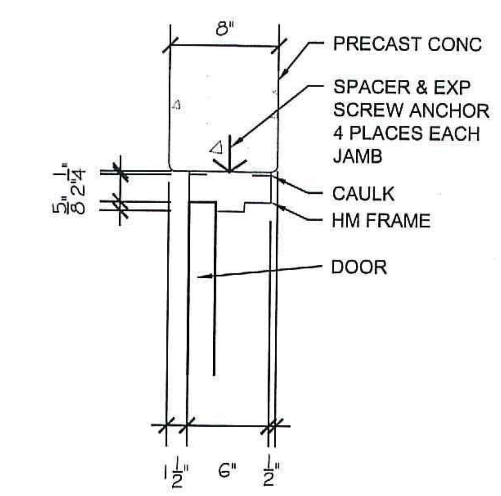

JAMB @ PED DOOR @ PRECAST CONC

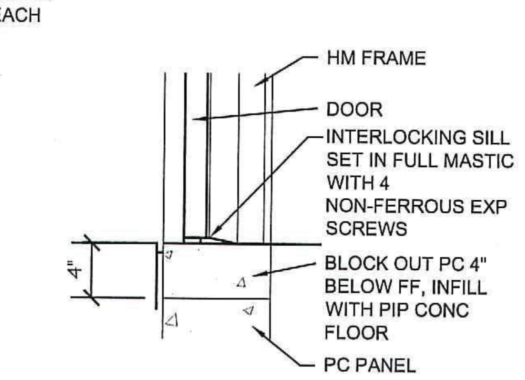

SILL @ PED DOOR @ PRECAST CONC

DOOR DETAILS

SCALE: 1" = 1'-0"

CBSA Architects
Architecture • Planning • Interior Design
www.cbsa-architects.com
post office box 1239
226 second street nw
hickory, north carolina 28601
phone (828) 322-3403
fax (828) 322-1802
email cbsa@cbsa-architects.com

WK DICKSON
community infrastructure consultants
616 COLONNADE DRIVE
CHARLOTTE, NC 28205
(t)704-334-5348
(f)704-334-0078
WWW.WKDICKSON.COM
NC LICENSE NO.F-0374

JOHN STEVEN WALKER
REGISTERED ARCHITECT
4814
NORTH CAROLINA
HICKORY, N.C.
11/8/2018
PROFESSIONAL SEAL

REVISION RECORD

NO.	DATE	DESCRIPTION	BY

TYPICAL SIGNAGE NOTES

1. 1/32" RAISED ACRYLIC NUMBERS-COPY & SYMBOLS (COLOR TO BE SELECTED BY ARCHITECT)
2. 1/16" P99 CLEAR ACRYLIC SUBSURFACE B/G COLOR (COLOR TO BE SELECTED BY ARCHITECT)
3. 1/16" CLEAR ACRYLIC SPACERS
4. FLUSH FACE SECURITY SCREW MOUNTED
5. 1/16" CLEAR ACRYLIC BASE
6. 1/8" P99 CLEAR ACRYLIC w/ B/G COLOR SUBSURFACE (SURFACE COLOR TO BE SELECTED BY ARCHITECT)

NOTE
COMPLETE SCHEDULE TO BE FURNISHED SUBMIT SIGN AND COLOR SAMPLES OF EACH KIND USED w/ SHOP DRAWINGS

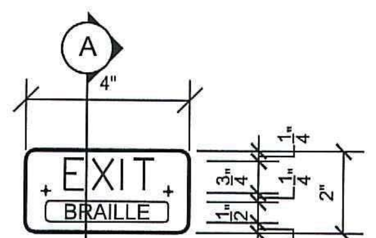

SIGN '4'

(4) REQUIRED

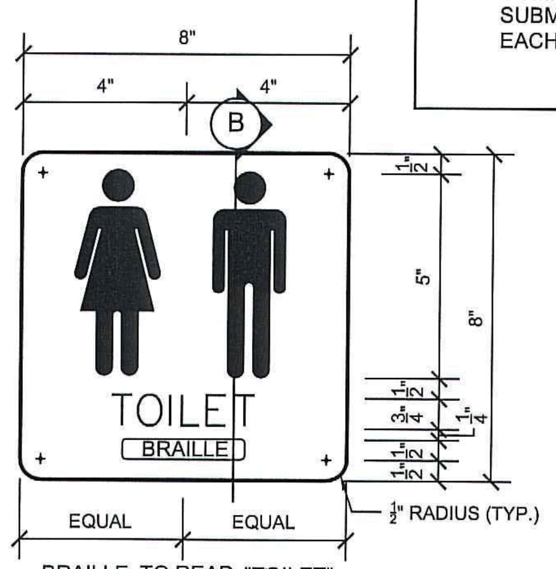

SIGN '1'

(1) REQUIRED

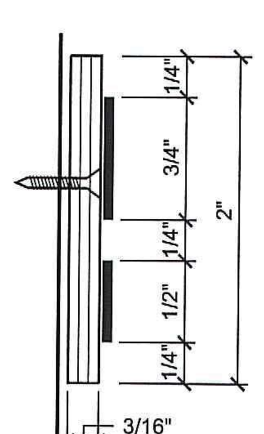

SECTION 'A'

SCALE: 3" = 1'-0"

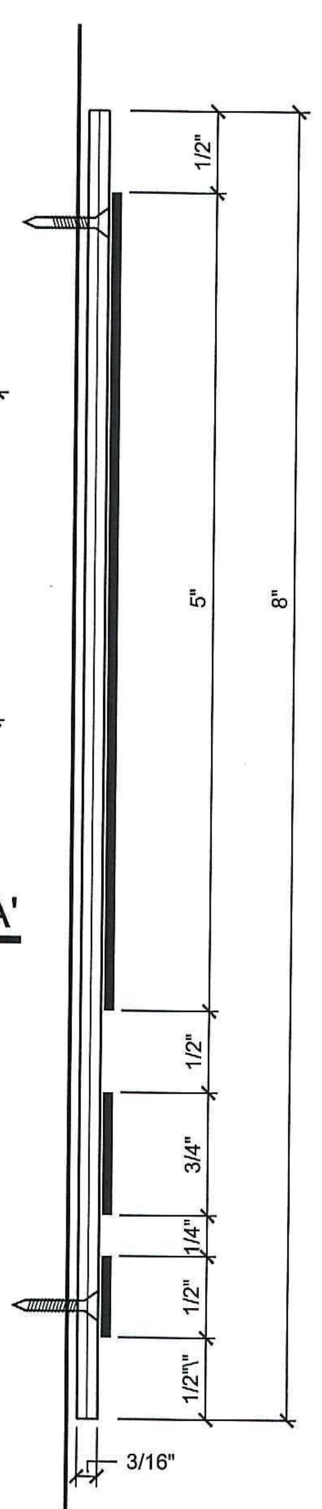

SECTION 'B'

SCALE: 3" = 1'-0"

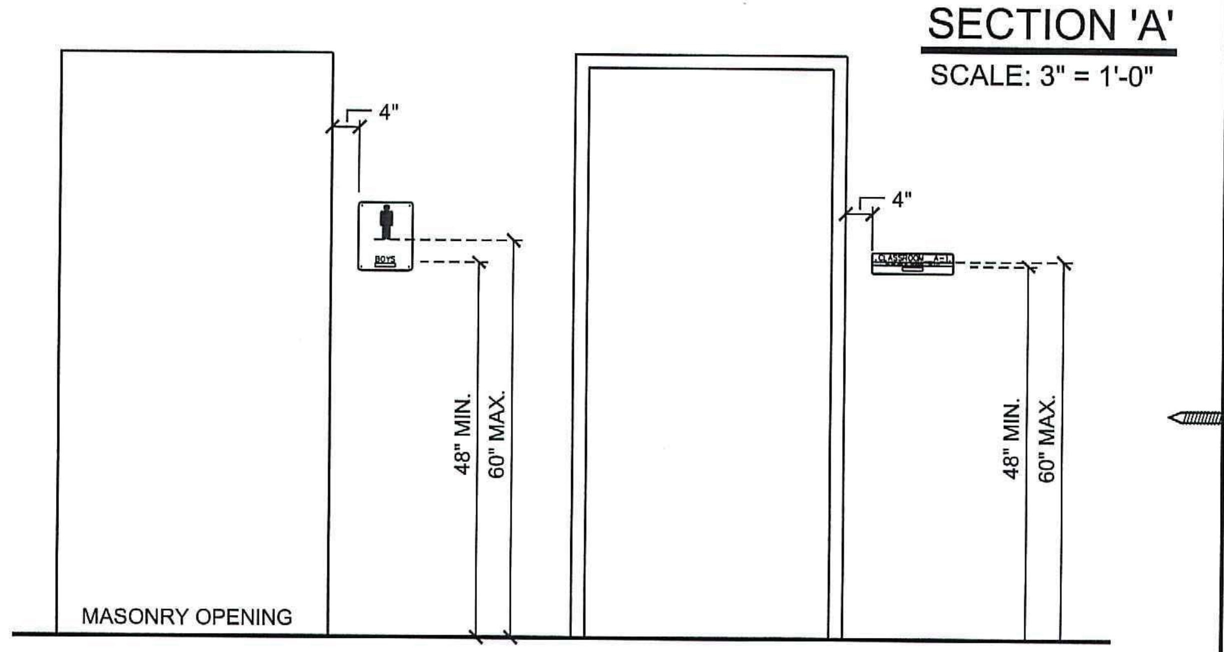

MOUNTING HEIGHTS

HOLLOW METAL FRAME AND ¼" TEMPORED GLASS

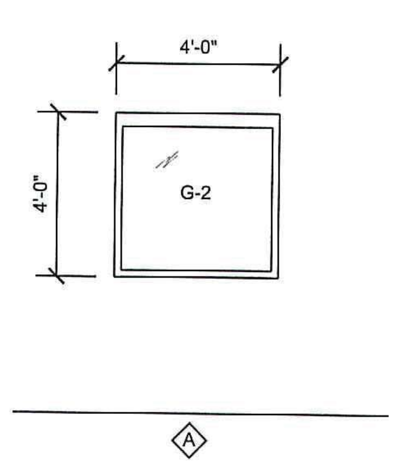

WINDOWS

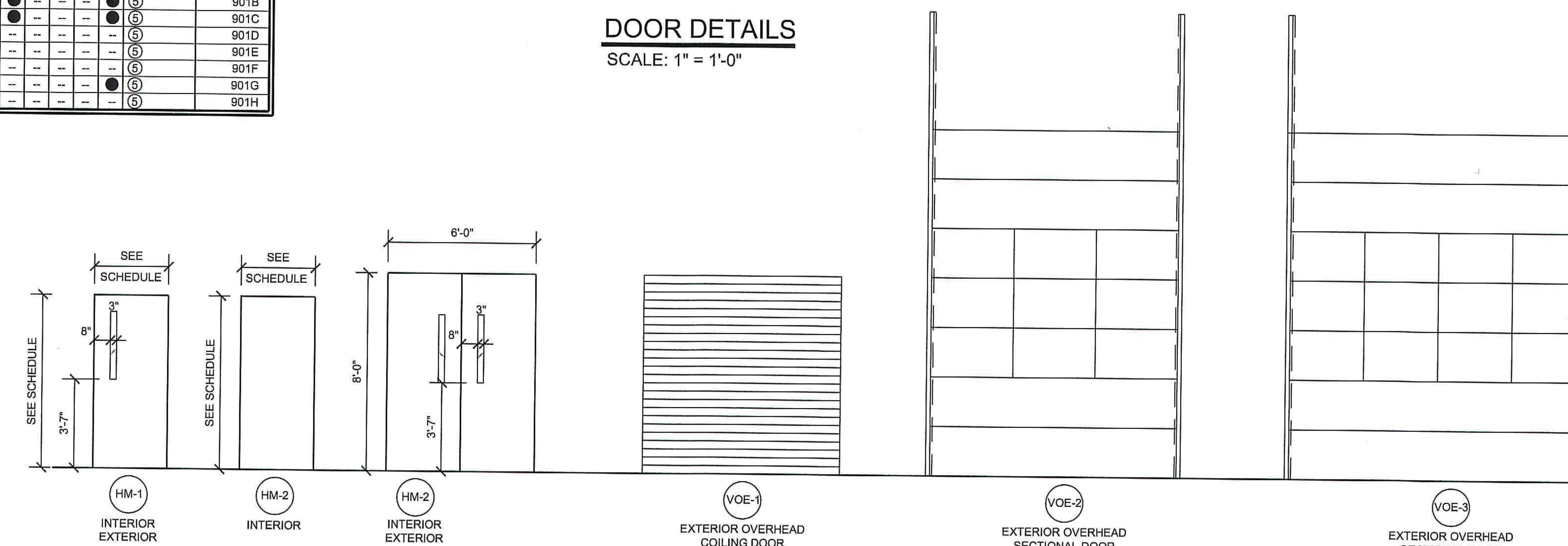

DOOR TYPES

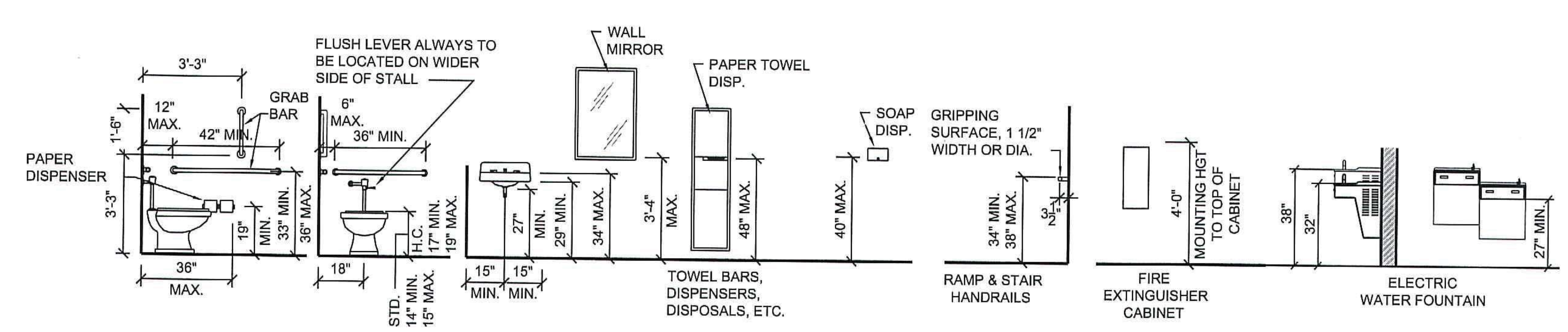

ACCESSIBLITY CODE REQUIREMENTS

MOUNTING HEIGHTS FOR NC AND ADA COMPLIANCE NOT TO SCALE
AGES 13 - ADULTS

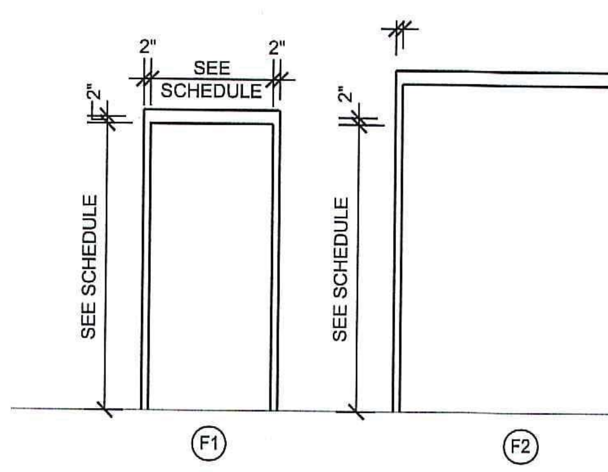

DOOR FRAMES

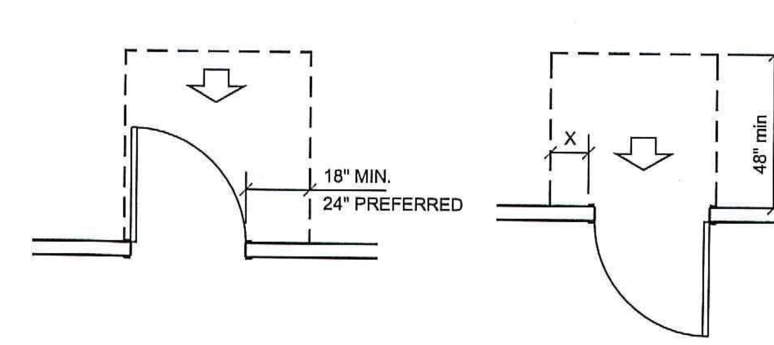

FRONT APPROACHES

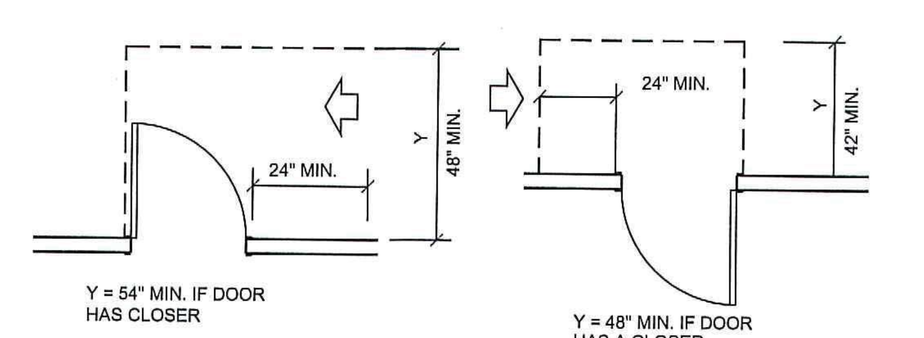

LATCH SIDE APPROACHES

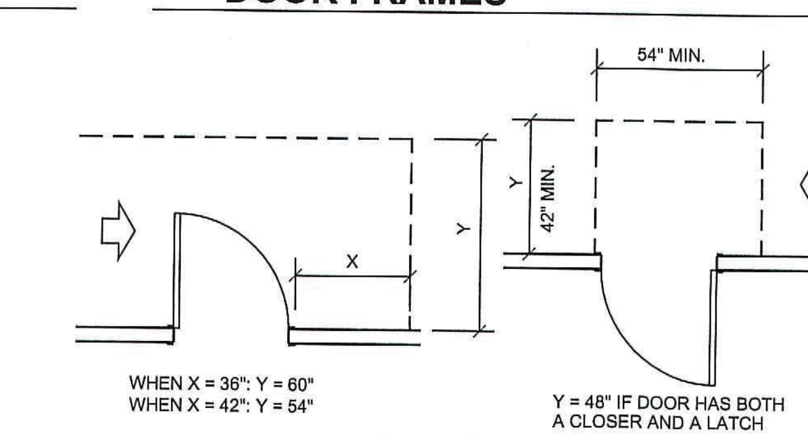

HINGE SIDE APPROACHES

MINIMUM DOOR CLEARANCES

FINAL DRAWINGS - NOT RELEASED FOR CONSTRUCTION

PROJECT NAME: KILLIAN CREEK WWTP PHASE 3 UPGRADE

DRAWING TITLE: SCHEDULES

PROJ. MGR.:	CRF
DESIGN BY:	CRF
DRAWN BY:	
PROJ. DATE:	11-5-2018

DRAWING NUMBER: 10.A-A.1

WKD PROJ. NO.: 20170294.00.CL

COPYRIGHT © W.K. DICKSON & CO., INC. ALL RIGHTS RESERVED. REPRODUCTION OR USE OF THE CONTENTS OF THIS DOCUMENT, ARTICLES OR PORTIONS THEREOF, IN ANY FORM OR BY ANY ELECTRONIC, MECHANICAL OR OTHER MEANS, NOW KNOWN OR HEREAFTER DEVELOPED, INCLUDING BUT NOT LIMITED TO PHOTOCOPYING, RECORDING, OR IN ANY INFORMATION STORAGE AND RETRIEVAL SYSTEM, IS PROHIBITED WITHOUT THE WRITTEN PERMISSION OF W.K. DICKSON & CO., INC. PRINTED IN THE USA. TRUE COPIES.

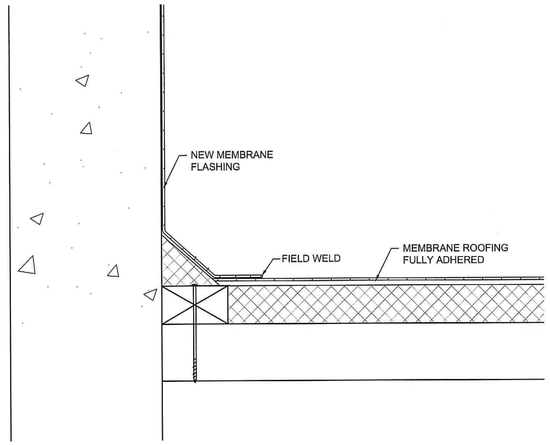

1 / 10.A-A.2 ROOF TO PARAPET DETAIL
SCALE: 3" = 1'-0"

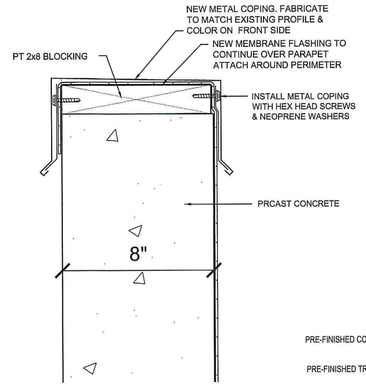

2 / 10.A-A.2 COPING DETAIL
SCALE: 3" = 1'-0"

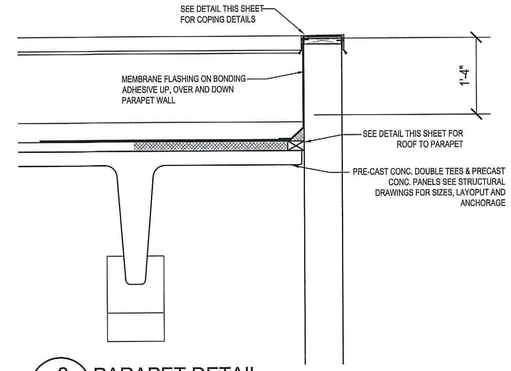

3 / 10.A-A.2 PARAPET DETAIL
SCALE: 3/4" = 1'-0"

CBSA Architects
Architecture • Planning • Interior Design
www.cbsa-architects.com

post office box 1239
226 second street nw
hickory, north carolina 28601

phone (828) 322-3403
fax (828) 322-1802
email cbsa@cbsa-architects.com

WK DICKSON
community infrastructure consultants
616 COLONNADE DRIVE
CHARLOTTE, NC 28205
(t)704-334-5348
(f)704-334-0078
WWW.WKDICKSON.COM
NC LICENSE NO.F-0374

JOHN STEVEN WALKER
REGISTERED ARCHITECT
4814
NORTH CAROLINA
HICKORY, N.C.
11/8/2018
PROFESSIONAL SEAL

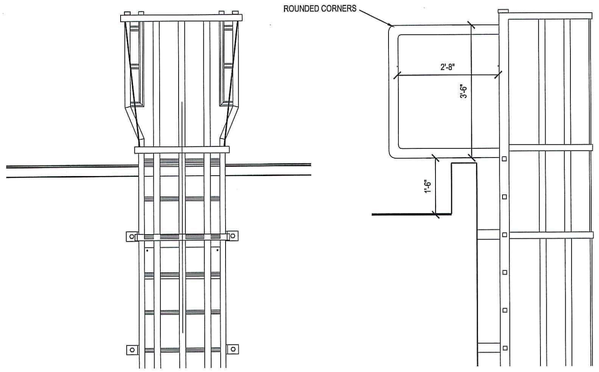

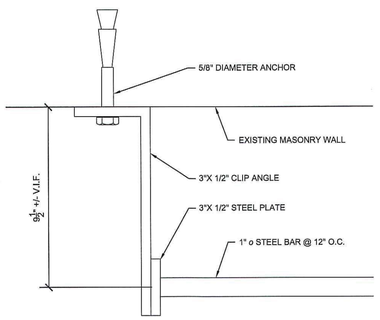

6 / 10.A-A.2 LADDER BRACKET
SCALE: 3" = 1'-0"

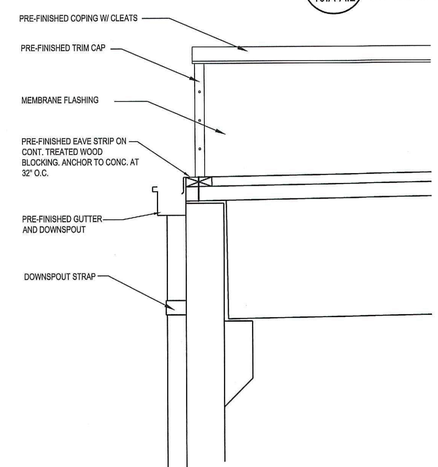

7 / 10.A-A.2 GUTTER @ PRECAST ROOF / WALL
SCALE: 3/4" = 1'-0"

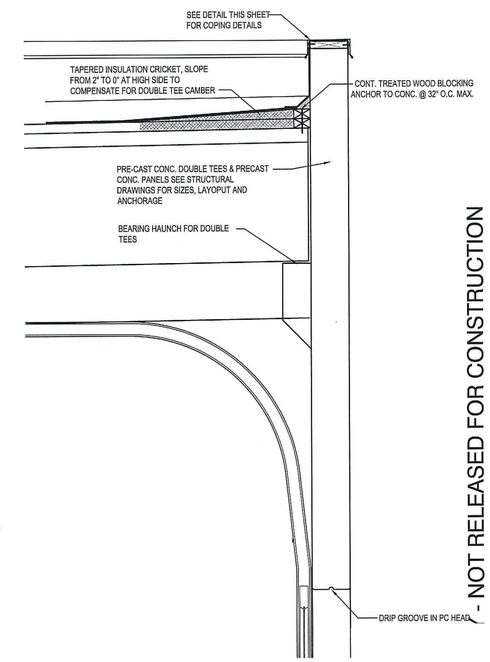

8 / 10.A-A.2 HEAD @ OVERHEAD DOOR
SCALE: 3/4" = 1'-0"

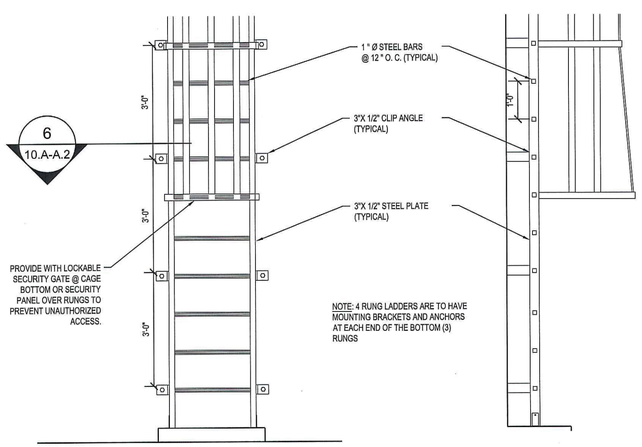

4 / 10.A-A.2 LADDER ELEVATION
SCALE: 3/4" = 1'-0"

5 / 10.A-A.2 LADDER SECTION
SCALE: 3/4" = 1'-0"

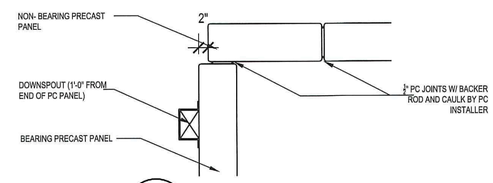

9 / 10.A-A.2 PRECAST JOINTS & DOWNSPOUT
SCALE: 3/4" = 1'-0"

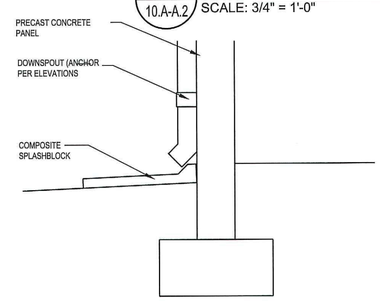

10 / 10.A-A.2 GUTTER & DOWNSPOUT
SCALE: 3/4" = 1'-0"

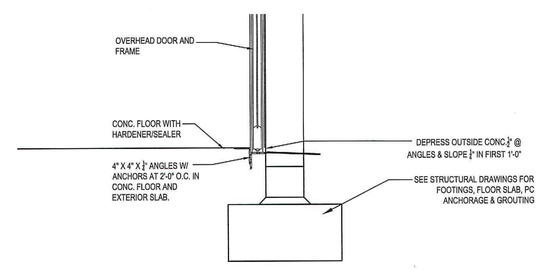

11 / 10.A-A.2 SILL @ OVERHEAD DOOR
SCALE: 3/4" = 1'-0"

FINAL DRAWINGS - NOT RELEASED FOR CONSTRUCTION

REVISION RECORD

NO.	DATE	DESCRIPTION	BY

PROJECT NAME: KILLIAN CREEK WWTP PHASE 3 UPGRADE

DRAWING TITLE: DETAILS

PROJ. MGR.:	CRF
DESIGN BY:	CRF
DRAWN BY:	
PROJ. DATE:	11-5-2018
DRAWING NUMBER:	10.A-A.2
WKD PROJ. NO.:	20170294.00.CL

COPYRIGHT ©, W.K. DICKSON & CO., INC. ALL RIGHTS RESERVED. REPRODUCTION OR USE OF THE CONTENTS OF THIS DOCUMENT; ADDITIONS OR DELETIONS TO THIS DOCUMENT, IN WHOLE OR IN PART, WITHOUT WRITTEN CONSENT OF W.K. DICKSON & CO., INC., IS PROHIBITED. ONLY COPIES FROM THE ORIGINAL OF THIS DOCUMENT, MARKED WITH AN ORIGINAL SIGNATURE AND SEAL SHALL BE CONSIDERED TO BE VALID, TRUE COPIES.

GENERAL

1. THESE GENERAL NOTES ARE NOT INTENDED TO REPLACE SPECIFICATIONS. SEE SPECIFICATIONS FOR REQUIREMENTS IN ADDITION TO GENERAL NOTES.
2. THE STRUCTURAL DRAWINGS AND SPECIFICATIONS REPRESENT THE FINISHED STRUCTURE, AND, EXCEPT WHERE SPECIFICALLY SHOWN, DO NOT INDICATE THE METHOD OR MEANS OF CONSTRUCTION. THE CONTRACTOR SHALL SUPERVISE AND DIRECT THE WORK AND SHALL BE SOLELY RESPONSIBLE FOR ALL CONSTRUCTION MEANS, METHODS, PROCEDURES, TECHNIQUES, AND SEQUENCE. ALL APPLICABLE SAFETY REGULATIONS TO BE FOLLOWED STRICTLY.
3. THE STRUCTURE HAS BEEN DESIGNED TO RESIST DESIGN LOADS ONLY AS A COMPLETED STRUCTURE. APPLICATIONS OF CONSTRUCTION LOADS TO THE PARTIALLY COMPLETED STRUCTURE SHALL BE CONSIDERED BY THE CONTRACTOR AND SO INCLUDED IN THE DESIGN OF SHORING, BRACING, FORMWORK, AND ANY OTHER SUPPORTING ELEMENTS PROVIDED FOR CONSTRUCTION OF THE STRUCTURE. DURING ERECTION AND UNTIL ALL PERMANENT CONNECTIONS ARE MADE, THE CONTRACTOR MUST PROVIDE TEMPORARY BRACING FOR THE STRUCTURE IN ALL DIRECTIONS.
4. THE GENERAL CONTRACTOR SHALL CHECK AND VERIFY ALL DIMENSIONS AND GRADE CONDITIONS (BOTH NEW AND EXISTING), REPORTING ANY DISCREPANCIES TO THE ENGINEER PRIOR TO ORDERING MATERIALS OR PROCEEDING WITH ANY PHASE OF THE WORK.
5. THE CONTRACTOR SHALL COMPARE STRUCTURAL SECTIONS WITH ALL OTHER SECTIONS AND REPORT ANY DISCREPANCY TO THE ENGINEER PRIOR TO FABRICATION OR INSTALLATION OF STRUCTURAL MEMBERS.
6. DO NOT SCALE DIMENSIONS FROM DRAWINGS. THE CONTRACTOR SHALL REQUEST, FROM THE ENGINEER, NECESSARY DIMENSIONS NOT SHOWN ON THE DRAWINGS.
7. IF ANY BIDDER IS IN DOUBT AS TO THE INTENT OF THE PLANS OR SPECIFICATIONS, THEY SHALL REQUEST AN INTERPRETATION FROM THE ARCHITECT IN WRITING AT LEAST TEN (10) DAYS PRIOR TO THE SCHEDULED BID DATE.
8. PRINCIPAL OPENINGS IN THE STRUCTURE ARE SHOWN ON THESE DRAWINGS. THE GENERAL CONTRACTOR SHALL EXAMINE ALL DISCIPLINE DRAWINGS FOR REQUIRED OPENINGS AS THEY SHALL BE PROVIDED FOR WHETHER SHOWN ON THESE DRAWINGS OR NOT. GENERAL CONTRACTOR SHALL VERIFY SIZE AND LOCATION OF ALL OPENINGS WITH ALL SUB-CONTRACTORS PRIOR TO CONSTRUCTION.
9. SEE G-SERIES DRAWINGS FOR FLOOR ELEVATIONS, FLOOR SLOPES, AND THE LOCATION OF DEPRESSED FLOOR AREAS.
10. WHERE A CONFLICT BETWEEN DRAWINGS AND SPECIFICATIONS OCCUR THE MORE STRINGENT REQUIREMENT SHALL APPLY.
11. WHERE A DETAIL IS SHOWN FOR ONE CONDITION, IT SHALL APPLY FOR ALL LIKE OR SIMILAR CONDITIONS EVEN THOUGH NOT SPECIFICALLY REFERENCED ON THE DRAWINGS.
12. THIS PROJECT REQUIRES SPECIAL INSPECTIONS AS DESCRIBED IN SECTION 1704 OF THE NORTH CAROLINA STATE BUILDING CODE. SEE STATEMENT OF SPECIAL INSPECTIONS FOR REQUIRED INSPECTIONS. CONTRACTOR SHALL COORDINATE WITH SPECIAL INSPECTOR ALL WORK REQUIRING SPECIAL INSPECTIONS AND TESTING.
13. ALL CONSTRUCTION SHALL CONFORM TO THE BUILDING CODE AND TO OSHA STANDARDS. WORK STRUCTURAL DRAWINGS WITH ALL DISCIPLINE DRAWINGS.
14. SUBMIT SHOP DRAWINGS TO THE ENGINEER FOR REVIEW. CONTRACTOR SHALL ALLOW AN APPROPRIATE AMOUNT OF REVIEW TIME. IF SUBMITTAL SHOP DRAWING REVIEW TIME IS CRITICAL TO THE PROJECT SCHEDULE, THEN PROVIDE AT LEAST A 3 DAY NOTICE OF SUBMISSION DATE TO ALLOW ENGINEER TIME TO ALLOT PROPER RESOURCES TO THE TASK. OTHERWISE THE REVIEW WILL BE SCHEDULED BASED ON CURRENT WORKLOAD AT THE TIME OF SUBMISSION
    A. ALL SUBMITTALS SHALL BE REVIEWED BY THE CONTRACTOR AND CONTAIN A STAMP WITH HIS SIGNATURE. SUBMITTALS WITHOUT THE STAMP WILL BE REJECTED AND RETURNED UN-REVIEWED.
    B. CONTRACTOR SHALL NOT BE RELIEVED FROM HIS RESPONSIBILITY FOR ERRORS OR OMISSIONS IN SHOP DRAWINGS IF MISSED IN THE REVIEW BY THE ENGINEER. IF ALTERNATE MATERIALS ARE PROPOSED, CONTRACTOR SHALL SUBMIT DETAILED CUT SHEETS AND PRODUCT DESCRIPTIONS IN ORDER TO BE CONSIDERED.
    C. SHOP DRAWINGS SHALL INCLUDE GENERAL ARRANGEMENT AND LOCATION PLANS, APPLICABLE DETAILS, ALL CONNECTIONS, MATERIAL CUT SHEETS, ETC. IF SPECIAL NOMENCLATURE IS USED LEGENDS MUST BE CREATED FOR EASY REFERENCE.
    D. IF SPECIALTY PRODUCTS AS NOTED BELOW AND/OR IN PROJECT SPECIFICATIONS REQUIRE DESIGN BY A SPECIALTY ENGINEER, THEN SHOP DRAWINGS FOR THOSE PRODUCTS OR MATERIALS SHALL BE SEALED BY A PROFESSIONAL ENGINEER REGISTERED IN THE STATE OF THE PROJECT. RETURNED SHOP DRAWINGS WILL NOT BE APPROVED, THEY WILL ONLY BE REVIEWED FOR GENERAL CONFORMANCE WITH DESIGN INTENT AND CONTRACT DOCUMENTS.

DEMOLITION

1. THE CONTRACTOR SHALL NOTIFY ALL LOCAL AGENCIES HAVING JURISDICTION, AND SHALL OBTAIN ALL NECESSARY PERMITS REQUIRED FOR THE DEMOLITION AND REMOVAL OF THE DEBRIS RESULTING FROM THE DEMOLITION.
2. CONTRACTOR SHALL VISIT THE SITE AND FAMILIARIZE THEMSELVES WITH ALL CONDITIONS NECESSARY TO EXECUTE THEIR WORK. PROPOSALS SHALL TAKE INTO CONSIDERATION ALL SUCH CONDITIONS AND PROJECT SCHEDULING THAT MAY AFFECT THEIR WORK
3. CONTRACTOR SHALL RETAIN, AT THEIR EXPENSE, A REGISTERED PROFESSIONAL ENGINEER LICENSED IN THE STATE IN WHICH THE PROJECT IS LOCATED, TO DETERMINE ALL CONSTRUCTION PHASE SHORING REQUIREMENTS. CONTRACTOR SHALL SUBMIT TO THE OWNER AND THE ENGINEER OF RECORD, SIGNED AND SEALED DRAWINGS, OUTLINING OPERATIONAL SEQUENCES, SHORING CONCEPTUAL PLANS, METHODS USED FOR THE PROTECTION OF STRUCTURES TO REMAIN AND NEIGHBORING STRUCTURES.
4. AT ALL TIMES DURING DEMOLITION WORK THE EXISTING STRUCTURE, EQUIPMENT AND THOSE PEOPLE USING THE SPACE SHALL BE PROTECTED FROM DAMAGE OR INJURY.
5. PROVIDE THE NECESSARY DUSTPROOF ENCLOSURES, PARTITIONS, ETC. REQUIRED TO TEMPORARILY ENCLOSE THE CONSTRUCTION AREA SO AS TO ADEQUATELY PROTECT THE EMPLOYEES, THE EQUIPMENT AND PROPERTY OF THE OWNER. IF ENCLOSURES DO NOT PROVIDE A SUFFICIENT BARRIER TO THE SATISFACTION OF THE OWNER, WORK IN THIS AREA MUST BE COMPLETED IN OFF HOURS AT THE EXPENSE OF THE CONTRACTOR.
6. ALL CONSTRUCTION MATERIAL NOTED TO BE REMOVED SHALL BE DISPOSED OF IN A LAWFUL MANNER.
7. PRIOR TO SAWCUTTING ANY FLOOR SYSTEM, EITHER TEMPORARY SHORING OR FINAL SUPPORT SYSTEM (OR COMBINATION) SHALL BE INSTALLED.
8. CONTRACTOR SHALL PROVIDE ALL TEMPORARY SHORING AND BRACING REQUIRED TO INSURE THAT STRUCTURE BEING REMOVED AND THE STRUCTURE REMAINING ARE CAPABLE OF CARRYING ALL LOADS INCLUDING DEMOLITION LOADS SAFELY. CONTRACTOR SHALL RETAIN, AT THEIR EXPENSE, A REGISTERED PROFESSIONAL ENGINEER LICENSED IN THE STATE IN WHICH THE PROJECT IS LOCATED, TO DETERMINE ALL CONSTRUCTION PHASE SHORING REQUIREMENTS. CONTRACTOR SHALL SUBMIT TO THE OWNER AND THE ENGINEER OF RECORD, SIGNED AND SEALED DRAWINGS, OUTLINING OPERATIONAL SEQUENCES, SHORING CONCEPTUAL PLANS, METHODS USED FOR THE PROTECTION OF STRUCTURES TO REMAIN AND NEIGHBORING STRUCTURES.
9. CONTRACTOR SHALL BE SOLELY RESPONSIBLE FOR THE PROTECTION AND STABILITY OF EXISTING AND NEW STRUCTURES DURING CONSTRUCTION.
10. BEFORE UNDERTAKING ANY DEMOLITION WORK OR ORDERING MATERIAL, ASCERTAIN BY SURVEY THE EXISTING CONDITIONS OF THE PROPERTIES AND BUILDINGS ADJOINING OR IN CLOSE PROXIMITY TO THE PREMISES. THE ARCHITECT SHALL BE NOTIFIED OF ANY DISCREPANCY.
11. PROVIDE AND MAINTAIN BRACING AND SHORING AS NEEDED. KEEP SUPPORTING STRUCTURE IN PLACE DURING NEW CONSTRUCTION AND UNTIL NEW STRUCTURE IS COMPLETED.
12. STORE AND PROTECT ALL MATERIAL TO BE REMOVED AND REUSED.
13. IF SAFETY OR INTEGRITY OF STRUCTURAL SYSTEM APPEARS TO BE COMPROMISED, CEASE OPERATIONS IMMEDIATELY AND NOTIFY THE OWNER AND THE ENGINEER. PROPERLY BRACE AND SUPPORT STRUCTURE BEFORE RESUMING OPERATIONS.
14. ANY DAMAGE OCCURRING TO THE EXISTING STRUCTURE, ADJACENT STRUCTURES, STREETS, SIDEWALKS, UTILITY LINES OR ANY OTHER PUBLIC OR PRIVATE PROPERTIES, SHALL BE REINSTALLED TO THE ORIGINAL CONDITION BY THE CONTRACTOR AT NO COST TO THE OWNER OR THE ENGINEER.
15. THE CONTRACTOR SHALL TAKE THE PREMISES IN THEIR PRESENT STATE AND CONDITION AND UNLESS OTHERWISE SPECIFIED HEREIN, SHALL MAKE ALL THE NECESSARY PROVISIONS AND PREPARATIONS REQUIRED FOR THE DEMOLITION AND REMOVAL OF ALL ITEMS NOTED ON THE DRAWINGS OR AS REQUIRED TO PERMIT THE INSTALLATION OF THE NEW WORK. THIS WORK SHALL BE DONE NEATLY AND WITHOUT SHOCK OR DAMAGE TO THE REMAINING STRUCTURE.
16. ALL OPENINGS IN EXISTING CONSTRUCTION SHALL BE SAW CUT OR DRILLED.
17. ALL OPENINGS IN EXISTING CONSTRUCTION SHALL BE SAW CUT OR DRILLED.ALL BUILDING MATERIALS, RUBBLE AND DEBRIS SHALL BECOME THE PROPERTY OF THE CONTRACTOR AND SHALL BE REMOVED DAILY FROM THE SITE BY HIM AND DISPOSED OF IN A LEGAL WAY.
18. THE SITE SHALL BE LEFT FREE AND CLEAR OF ALL DEBRIS, LOOSE AND UNUSED MATERIALS AND EQUIPMENT.
19. ALL EXISTING INFORMATION SHOWN IS REFERENCED FROM EXISTING DRAWINGS PREPARED BYWK DICKSON, DATED 12-10-2010.

VIBRATION MONITORING

1. DUE TO THE PRESENCE OF ROCK DURING EXCAVATIONS NEAR THE EXISTING STRUCTURES, VIBRATION MUST BE KEPT TO A MINIMUM.
2. THE CONTRACTOR SHALL RETAIN A SPECIALTY ENGINEER TO MONITOR AND RECORD VIBRATION LEVELS OF THE EXISTING STRUCTURE WHEN OPERATIONS ARE IN CLOSE PROXIMITY TO EXISTING STRUCTURES. PROVIDE VIBRATION MONITORING EQUIPMENT CAPABLE OF DETECTING PARTICLE VELOCITIES OF 0.1 IN/SEC OR LESS. UPON DETECTING VIBRATION PARTICLE VELOCITIES GREATER THAN 2 IN/SEC OR OBSERVING DAMAGE TO EXISTING STRUCTURES, IMMEDIATELY STOP OPERATIONS. THE CONTRACTOR MUST THEN SUBMIT THEIR PLAN TO MINIMIZE VIBRATION TO THE STRUCTURAL AND GEOTECHNICAL ENGINEER FOR APPROVAL. UPON CONCURRENCE WITH PLAN, THE CONTRACTOR MAY START OPERATIONS AGAIN AND CONTINUE UNTIL HIGH VELOCITIES OR DAMAGE IS NOTED AGAIN.

DESIGN CRITERIA

1. APPLICABLE CODES:
    A. 2018 NORTH CAROLINA STATE BUILDING CODE (2015 INTERNATIONAL BUILDING CODE WITH REVISIONS)
    B. BUILDING CODE REQUIREMENTS FOR STRUCTURAL CONCRETE (ACI 318-14)
    C. BUILDING CODE REQUIREMENTS FOR MASONRY STRUCTURES (ACI 530-13)
    D. SPECIFICATION FOR STRUCTURAL STEEL BUILDINGS (AISC 360-10)
    E. AMERICAN WELDING SOCIETY STRUCTURAL WELDING CODE (D1.1-11)
    F. MINIMUM DESIGN LOADS FOR BUILDINGS AND OTHER STRUCTURES (ASCE 7-10)
    G. NATIONAL DESIGN SPECIFICATION FOR WOOD CONSTRUCTION (NDS-12)
    H. DESIGN OF COLD-FORMED STEEL STRUCTURAL MEMBERS (AISI S100-12)

2. LIVE LOAD:	UNIFORM (PSF)	CONCENTRATED (LB)
BAR GRATING PLATFORMS	50	
SLUDGE DEWATERING OFFICE ROOF	100	1,000
ROOF	20	300
STAIRS	100	300

3. DEAD LOAD:	UNIFORM (PSF)
ROOF	SEE PRECAST DWGS
SLUDGE DEWATERING OFFICE ROOF	100

4. SNOW LOAD:	
GROUND SNOW LOAD	Pg = 10 PSF
IMPORTANCE FACTOR	Is = 1.1
SNOW EXPOSURE FACTOR	Ce = 1.0
THERMAL FACTOR	Ct = 1.1
FLAT SNOW ROOF LOAD	Pf = 11 PSF
DRIFTING SNOW LOAD	Pf = 30 PSF, TRIANGULAR LOAD WITH DRIFT WIDTH = 6 FT
RAIN ON SNOW SURCHARGE	5 PSF
5. RAIN LOAD	R = 20 PSF (4 INCHES OF RAIN)

6. WIND LOAD:	
BASIC DESIGN WIND VELOCITY	V = 120 MPH
OCCUPANCY CLASSIFICATION	III
EXPOSURE CATEGORY	C
INTERNAL PRESSURE COEFFICIENTS	±0.18
INTERIOR PARTITION (INTERNAL PRESSURE)	5 PSF
COMPONENTS AND CLADDING	
WALLS AND WINDOWS	+31.5, -42.1 PSF
ROOF - CORNERS	+14, -37.4 PSF
ROOF - EDGES	+14, -43.2 PSF
ROOF - MIDDLE	+14, -57.8 PSF
BASE SHEAR	PER PRECAST ENGINEER

COMPONENTS AND CLADDING - ALL BUILDING COMPONENTS AND CLADDING ENGINEERED BY THE COMPONENT MANUFACTURER ARE TO BE DESIGNED BY THE MANUFACTURER'S ENGINEER FOR WIND LOADS DETERMINED PER THE NORTH CAROLINA STATE BUILDING CODE FOR THE BASIC DESIGN WIND VELOCITY, IMPORTANCE FACTOR, AND EXPOSURE LISTED ABOVE.

7. SEISMIC LOAD:

DESIGN METHOD - EQUIVALENT LATERAL FORCE PROCEDURE

Ss	22.4 %g	
S1	9.8 %g	
Sds	23.9 %g	
Sd1	15.7 %g	
BUILDING OCCPANCY CATEGORY	III	
IMPORTANCE FACTOR	Ie = 1.25	
SITE CLASS	D	
SEISMIC RESPONSE COEFFICIENT	Cs = 0.075	
SEISMIC DESIGN CATEGORY	C	

SEISMIC FORCE-RESISTING SYSTEM - ORDINARY REINFORCED CONCRETE SHEAR WALLS

RESPONSE MODIFICATION COEFFICIENT	Rx = 4	Ry = 4
DEFLECTION AMPLIFICATION FACTOR	Cdx = 4	Cdy = 4
BASE SHEAR	PER PRECAST ENGINEER	
ARCHITECTURAL, MECHANICAL & ELECTRICAL COMPONENTS ANCHORED	YES	

NONSTRUCTURAL COMPONENT ANCHORAGE - ALL ARCHITECTURAL, ELECTRICAL, MECHANICAL, AND PLUMBING COMPONENTS ARE TO BE ATTACHED AS REQUIRED BY ASCE 7 CHAPTER 13, "SEISMIC DESIGN REQUIREMENTS FOR NONSTRUCTURAL COMPONENTS". EACH INDIVIDUAL CONTRACTOR RESPONSIBLE FOR THE COMPONENT MUST PROVIDE PROJECT SPECIFIC DESIGN AND DOCUMENTATION PREPARED BY AN ENGINEER LICENSED IN THE STATE OF NORTH CAROLINA. CHAPTER 13 DEFINES THE FORCE REQUIRED TO SUPPORT THE COMPONENT FOR THE ANCHORAGE AND BRACING. THE COST OF PREPARING THIS INFORMATION AND DESIGN SHALL BE INCLUDED IN EACH CONTRACTOR'S BID THAT IS PROVIDING THE COMPONENT.

8. FUTURE LOADS:

UNLESS SPECIFICALLY NOTED, THERE ARE NO PROVISIONS MADE FOR FUTURE FLOORS, ROOFS, OR OTHER LOADS.

FOUNDATIONS

1. FOUNDATION DESIGN IS BASED ON THE GEOTECHNICAL INVESTIGATION REPORT BY SOUTHERN ENGINEERING DATED 9/29/2018. THE DESIGN ALLOWABLE SOIL BEARING PRESSURE IS 4,000 PSF TYPICAL, 2,000 PSF FOR FILTER BUILDING AND 4,000 PSF UNDER SBR AND DIGESTER TANK BASED ON THIS REPORT.
2. SPECIAL CONSIDERATIONS MUST BE FOLLOWED AS OUTLINED IN THE ABOVE SOILS REPORT AND AS INDICATED ON THE DRAWINGS. THE CONTRACTOR SHALL OBTAIN THE SOILS REPORT FROM THE ARCHITECT OR OWNER AND BE FAMILIAR WITH THE RECOMMENDATIONS THAT ARE PART OF THE REPORT. ALL MUST BE FOLLOWED UNLESS WRITTEN DIRECTION IS GIVEN FROM THE ENGINEER.
3. ALL EXPANSIVE SOILS AND OR LOOSE SOILS SHALL BE REMOVED AND REPLACED AS DIRECTED BY A GEOTECHNICAL ENGINEER UNDER ALL STRUCTURAL FOUNDATIONS.
4. FOOTINGS SHALL BE CARRIED TO LOWER ELEVATIONS THAN THOSE SHOWN ON THE DRAWINGS IF REQUIRED BY THE GEOTECHNICAL ENGINEER OR TESTING LAB TO REACH SOIL CAPABLE OF PROVIDING THE DESIGN ALLOWABLE SOIL BEARING PRESSURE.
5. THE SUBGRADE AND UNDERFLOOR FILL SHALL BE PREPARED TO A POINT THAT EXTENDS 10'-0" MINIMUM BEYOND THE LIMITS OF THE FOUNDATION.
6. MINIMUM SUBGRADE PREPARATION REQUIREMENTS ARE AS FOLLOWS: COMPACT ALL FILL UNDER BUILDING TO 98%(100% FOR FILL DEEPER THAN 10') MAXIMUM DENSITY AS DETERMINED BY ASTM D698. PLACE IN LAYERS OF 8" TYPICAL (6" IN CONFINED AREAS) MAXIMUM LOOSE THICKNESS. VERIFY FIELD DENSITY, ASTM D1556, WITH AT LEAST ONE TEST PER 2,000 SQUARE FEET PER LAYER. SEE SPECIFICATIONS FOR OTHER TESTING REQUIREMENTS.
7. UTILITY LINES SHALL NOT BE PLACED THROUGH OR BELOW FOUNDATIONS WITHOUT APPROVAL OF THE STRUCTURAL ENGINEER. CONTRACTOR SHALL SUBMIT DETAILED DRAWINGS OF ALL SUCH CONDITIONS PRIOR TO CONSTRUCTION.
8. IT IS ASSUMED GROUND WATER DURING CONSTRUCTION MAY BE AN ISSUE. CONTRACTOR SHALL FAMILIARIZE THEMSELVES WITH THE ISSUE BY REVIEWING THE GEOTECHNICAL REPORT, FIELD INVESTIGATION OR OTHER STEPS AS REQUIRED. CONTRACTOR SHALL INCLUDE ALL COSTS ASSOCIATED WITH REMOVING GROUND WATER AS REQURIED TO INSTALL STRUCTURES.
9. RETAINING WALL LATERAL EQUIVALENT FLUID WEIGHTS:
    EQUIVALENT ACTIVE FLUID WEIGHT = 45 PCF
    EQUIVALENT AT REST FLUID WEIGHT = 60 PCF
10. MINIMUM FOUNDATION DEPTH: 2'-0 INCH (STEP AS REQUIRED TO MAINTAIN THIS DEPTH).
11. ALL FOUNDATION PADS SHALL BE CENTERED BELOW COLUMNS UNLESS NOTED OTHERWISE.
12. TOP OF FOOTING ELEVATIONS SHOWN ON PLANS ARE MINIMUMS AND MAY VARY DUE TO SITE OR UTILITY CONDITIONS. CONTINUOUS WALL FOOTINGS MAY BE LOWERED FROM PLAN ELEVATIONS TO SUIT SITE OR UTILITY CONDITIONS BY STEPPING AT A RATE OF 1 FOOT VERTICAL TO 2 FEET HORIZONTAL. SEE THE TYPICAL STEPPED FOOTING DETAIL. IN NO CASE SHALL THE TOP OF FOOTING ELEVATIONS BE HIGHER THAN NOTED.
13. UTILITY LINES SHALL NOT BE PLACED THROUGH OR BELOW FOUNDATIONS WITHOUT APPROVAL OF THE STRUCTURAL ENGINEER. STEP FOOTINGS DOWN AS REQUIRED SO THAT UTILITIES ARE ABOVE THE FOOTING. COORDINATE WITH MECHANICAL, PLUMBING AND ELECTRICAL DRAWINGS. CONTRACTOR SHALL SUBMIT DETAILED DRAWINGS OF ALL SUCH CONDITIONS PRIOR TO CONSTRUCTION.
14. IN THE EVENT THERE ARE EMBEDS, SLEEVES, ENCASEMENTS, ETC. THAT ARE NOT SPECIFICALLY DETAILED BUT ARE REQUIRED, FOUNDATIONS SHALL BE ENLARGED OR THICKENED AS REQUIRED TO PROVIDE THE CODE MINIMUM COVER REQUIREMENTS FOR THE ITEM OR REINFORCING.

FINAL DESIGN - NOT RELEASED FOR CONSTRUCTION

WK DICKSON
community infrastructure consultants
616 COLONNADE DRIVE
CHARLOTTE, NC 28205
(t)704-334-5348
(f)704-334-0078
WWW.WKDICKSON.COM
NC LICENSE NO.F-0374

NORTH CAROLINA PROFESSIONAL ENGINEER SEAL 024096 MICHAEL A. GARDINA
01/20/2020
PROFESSIONAL SEAL

STEWART
101 N TRYON ST SUITE 1400
CHARLOTTE, NC 28202
T 704.334.7925
FIRM LICENSE #: C-1051
www.stewartinc.com
PROJECT #: R17042

REVISION RECORD

NO.	DATE	DESCRIPTION	BY
	10/09/18	Issue for Owner and NCDEQ Review	

PROJECT NAME: KILLIAN CREEK WWTP PHASE 3 UPGRADE

DRAWING TITLE: GENERAL NOTES

PROJ. MGR.:	MAG
DESIGN BY:	BK
DRAWN BY:	DJB
PROJ. DATE:	OCT. 09, 2018

DRAWING NUMBER:

S.0.0

WKD PROJ. NO.:

20170294.00.CL

FILE PATH:L:\Projects\LINCL\20170294\00CL - Killian Creek WWTP Ph 3 Upgrade Const\CADD\Plan Set\TBD-20170294_G_SHT_Headworks-hqah45kh.dwgL:\Projects\LINCL\20170294\00CL - Killian Creek WWTP Ph 3 Upgrade Const\CADD\Plan Set\TBD-20170294_G_SHT_Headworks-hqah45kh.dwg, NSONGCO, 3/14/2018 10:02:29 AM

COPYRIGHT ©, W.K. DICKSON & CO., INC. ALL RIGHTS RESERVED. REPRODUCTION OR USE OF THE CONTENTS OF THIS DOCUMENT, ADDITIONS OR DELETIONS TO THIS DOCUMENT, IN WHOLE OR IN PART, WITHOUT WRITTEN CONSENT OF W.K. DICKSON & CO., INC., IS PROHIBITED. ONLY COPIES FROM THE ORIGINAL OF THIS DOCUMENT, MARKED WITH AN ORIGINAL SIGNATURE AND SEAL SHALL BE CONSIDERED TO BE VALID, TRUE COPIES.

FILE PATH:L:\Projects\LINCL\2017029400CL - Killian Creek WWTP Ph 3 Upgrade Const\CADD\Plan Set\TBD-20170294_G_SHT_Headworks-hqah45kh.dwgL:\Projects\LINCL\2017029400CL - Killian Creek WWTP Ph 3 Upgrade Const\CADD\Plan Set\TBD-20170294_G_SHT_Headworks-hqah45kh.dwg, NSONGCO, 3/14/2018 10:02:29 AM

PRECAST CONCRETE STRUCTURES

1. ALL PRECAST CONCRETE SHALL CONFORM TO THE FOLLOWING PUBLICATIONS AND COMMENTARIES (LATEST EDITION):
   A. ACI 318: BUILDING CODE REQUIREMENTS FOR REINFORCED CONCRETE
   B. ACI 117: SPECIFICATIONS FOR TOLERANCES FOR CONCRETE CONSTRUCTION AND MATERIALS.
   C. ACI 301: SPECIFICATIONS FOR STRUCTURAL CONCRETE FOR BUILDINGS
   D. ACI 315: DETAILS AND DETAILING OF CONCRETE REINFORCEMENT
   E. PCI DESIGN HANDBOOK – PRECAST AND PRESTRESSED CONCRETE
   F. AWS D1.1: STRUCTURAL WELDING CODE – STEEL
   G. AWS D1.4: STRUCTURAL WELDING CODE – REINFORCING STEEL
2. ALL PRECAST CONCRETE NOTED ON THE DRAWINGS SHALL BE DESIGNED AND DETAILED BY THE MATERIAL PROVIDER. FINAL SIZES, REINFORCING AND CONNECTIONS SHALL BE THE RESPONSIBILITY OF THE MATERIAL PROVIDER.
3. THE STRUCTURE SHALL BE DESIGNED FOR ALL LATERAL (WIND, SEISMIC, TEMPERATURE, HYDROSTATIC, ETC) AND GRAVITY (DEAD, LIVE, ETC.) LOADS IN ACCORDANCE WITH THE PROVISIONS OF THE GOVERNING BUILDING CODE. ALL ANALYSIS SHALL BE PERFORMED USING GENERALLY ACCEPTED METHODS OF ENGINEERING ANALYSIS AND DESIGN. UNIQUE DESIGN METHODS ARE NOT ACCEPTED. THE CODE OFFICIAL HAS THE FINAL APPROVAL OF ALL UNIQUE DESIGN METHODS.
4. PRECAST SHALL BE DESIGNED FOR THE SUPERIMPOSED LIVE LOAD INDICATED IN THE DESIGN CRITERIA, 15 PSF FOR MEP ATTACHMENTS.
5. THE DESIGN AND DETAILING OF ALL PRECAST CONCRETE AND THEIR CONNECTIONS SHALL BE THE RESPONSIBILITY OF THE PRECAST FABRICATOR. THIS SHALL INCLUDE ALL BOLTS, PLATES, BRACES, REINFORCING, WELD SIZES, AND ANY EMBEDDED ITEMS IN BOTH PRECAST AND THE STRUCTURAL FRAME FOR ALL CONNECTIONS BETWEEN THE PRECAST AND THE SUPPORT FRAME. ALL CONNECTIONS SHOWN ON THE DRAWINGS ARE CONCEPTUAL IN NATURE AND ARE FOR BIDDING PURPOSES ONLY.
6. THE PRECAST DESIGN SHALL BE PERFORMED BY A REGISTERED PROFESSIONAL ENGINEER LISCENSED IN THE STATE IN WHICH THE PROJECT IS LOCATED. THE DESIGN SHALL CONFORM TO THE GOVERNING BUILDING CODE, THE PCI DESIGN MANUAL, AND ASCE 7. DESIGN CALCULATIONS, STAMPED BY THE REGISTERED ENGINEER, SHALL BE SUBMITTED FOR REVIEW BY THE ENGINEER OF RECORD. THE PRECAST FABRICATOR SHALL DESIGN THE ENTIRE STRUCTURAL SYSTEM FOR ALL GRAVITY AND LATERAL LOADS SHOWN ON THESE DRAWINGS AND REQUIRED BY THE GOVERNING BUILDING CODE. DESIGN SHALL INCLUDE ALL INTERCONNECTIONS BETWEEN PANELS, DOUBLE TEES, ROOF PLANKS, DIAPHRAGM CHORDS AND COLLECTORS AND THE BASE OF ALL SHEAR WALLS.
7. DESIGN MODIFICATIONS MAY BE MADE ONLY AS NECESSARY TO MEET FIELD CONDITIONS AND TO ENSURE PROPER FITTING OF THE WORK, AND ONLY AS ACCEPTABLE TO THE ENGINEER OF RECORD. MAINTAIN GENERAL DESIGN CONCEPT SHOWN WITHOUT INCREASING OR DECREASING SIZES OF MEMBERS OR ALTERING PROFILES AND ALIGNMENT SHOWN.
8. REFER TO ALL DISCIPLINE DRAWINGS FOR LOCATIONS OF ALL OPENINGS, SLEEVES, AND PENETRATIONS IN THE STRUCTURE. ALL OPENINGS, EITHER PLANT-CAST OR FIELD-CUT, MUST BE REVIEWED AND APPROVED BY THE PRECAST FABRICATOR'S ENGINEER. SUBMIT WALL ELEVATION SHOP DRAWINGS NOTING REQUIRED OPENINGS FOR REVIEW. RESPECTIVE TRADES SUBCONTRACTORS SHALL REVIEW AND APPROVE SHOP DRAWINGS PRIOR TO SUBMITTAL TO ENGINEER.
9. ROOF MEMBERS ARE ASSUMED TO ACT AS A DIAPHRAGM TO TRANSMIT ALL LATERAL FORCES TO THE VERTICAL LATERAL LOAD RESISTING SYSTEM.
10. THE ASSUMED LATERAL LOAD RESISTING SYSTEM IS CONCRETE SHEAR WALLS. ANY DEVIATION FROM THIS SYSTEM THAT RESULTS IN CHANGES TO THE FOUNDATIONS, CONNECTIONS OR OTHER STRUCTURAL ELEMENTS NOT UNDER THE CONTROL OF THE PRECAST ENGINEER SHALL BE REDESIGNED BY THE ENGINEER OF RECORD AND ALL REDESIGN AND ASSOCIATED EXPENSES SHALL BE PAID FOR BY THE PRECAST MANUFACTURER.
11. ALL GROUT SHALL BE NON-SHRINK
12. CEMENT SHALL BE ASTM C150 TYPE I OR III
13. FLY ASH SHALL BE ASTM C618 CLASS C OR F WITH A MAXIMUM AMOUNT OF 20 PERCENT OF CEMENTIOUS MATERIALS.
14. AGGREGATES SHALL COMPLY WITH ASTM C33 UNIFORMLY GRADED TO COMPLY WITH FINISH REQUIREMENTS.
15. WATER-REDUCING ADMIXTURES SHALL BE ASTM C494 TYPE A OR F (HIGH RANGE).
16. PRECAST CONCRETE SHALL HAVE A MINIMUM COMPRESSIVE STRENGTH AT 28 DAYS:
    DOUBLE TEES 5,000 PSI, NORMAL WEIGHT - NO AIR
    WALLS 5,000 PSI, NORMAL WEIGHT - NO AIR
17. ALL EXPOSED EDGES AND CORNERS OF PRECAST CONCRETE SHALL HAVE A 45 DEGREE BY ONE INCH CHAMFERS UNLESS NOTED AND DETAILED OTHERWISE OR RADIUSED EDGES IF DETAILED.
18. PRECAST PANELS AND COLUMNS ARE TO BE ATTACHED TO FOUNDATION USING NMB SPLICE SLEEVES IN TO THE TOLERANCES PRESCRIBED BY THE SPLICE SLEEVE MANUFACTURER.
19. ALL REINFORCING BARS SHALL BE ASTM A615 GRADE 60, DEFORMED. SUSPEND REINFORCEMENT FROM MOLD WITH BOLSTERS, CHAIRS, SPACERS OR OTHER DEVICE FOR SPACING ACCORDING TO PCI MNL 116.
20. PRETENSIONING STRANDS SHALL BE ASTM A416 GRADE 250 OR 270 UNCOATED , 7 WIRE OR ASTM A886 GRADE 270 INDENTED, 7-WIRE, LOW RELAXATION STRANDS.
21. ALL WELDED CONNECTIONS SHALL BE IN ACCORDANCE WITH LATEST AWS D1.1 SPECIFICATIONS, USING E70XX ELECTRODES. ALL WELDING SHALL BE PERFORMED BY A CERTIFIED WELDER.
22. EMBED PLATES SHALL COMPLY WITH ASTM A36 WITH HEADED STUDS COMPLYING WITH ASTM A108.
23. DEFORMED BAR ANCHORS SHALL COMPLY WITH ASTM A496.
24. ALL REINFORCING STEEL, PLATES, ANGLES, ANCHORING ACCESSORIES, CONNECTIONS MATERIAL, ETC. BETWEEN CAST-IN-PLACE CONCRETE AND PRECAST CONCRETE AND PRECAST TO PRECAST CONCRETE SHALL BE DESIGNED AND PROVIDED BY THE PRECAST CONCRETE MANUFACTURER.
25. POWDER ACTUATED FASTENERS IN STEMS MUST BE A MINIMUM OF 7 INCH FROM THE BOTTOM SURFACES AND LOCATED NOT NEARER THAN 6 INCH FROM ENDS WITH MAXIMUM PENETRATIONS OF 1 INCH. POWDER ACTUATED FASTENERS IN SLABS TO BE NO NEARER ENDS OR EDGES THAN 4 INCH.

CONCRETE CONSTRUCTION JOINTS

1. CONTRACTOR SHALL PROVIDE NECESSARY CONSTRUCTION JOINTS IN MONOLITHIC CONCRETE POURS SO THAT THE QUALITY OF PLACEMENT AND FINISH MEETS THE REQUIREMENTS OF PLANS AND SPECIFICATIONS. THE CONTRACTOR SHALL SUBMIT A PLAN SHOWING THE LOCATION OF ALL CONSTRUCTION JOINTS TO THE STRUCTURAL ENGINEER FOR APPROVAL.
2. THERE SHALL BE NO HORIZONTAL CONSTRUCTION JOINTS IN CONCRETE POURS. ALL VERTICAL CONSTRUCTION JOINTS IN SLABS AND BEAMS SHALL BE MADE WITH BULKHEADS. ADDITIONAL REINFORCING AT CONSTRUCTION JOINTS SHALL BE AS SPECIFIED BY THE STRUCTURAL ENGINEER. SEE TYPICAL CONSTRUCTION JOINT DETAILS.

ADHESIVE, ADHESIVE GROUT, AND MECHANICAL POST-INSTALLED ANCHORS

1. ANCHOR BOLTS, REINFORCING STEEL, THREADED RODS, STAIR HANDRAILS, AND OTHER EMBEDDED STEEL ITEMS SHALL BE SET INTO HARDENED CONCRETE WITH ADHESIVE OR MECHANICAL POST-INSTALLED ANCHOR ONLY WHERE DETAILED ON THE DRAWINGS OR WHERE APPROVED BY THE ENGINEER.
2. MANUFACTURER'S DATA FOR ALL ADHESIVE, ADHESIVE GROUT, AND MECHANICAL POST-INSTALLED ANCHOR SHALL BE SUBMITTED TO THE ENGINEER FOR APPROVAL PRIOR TO INSTALLATION. SUBMITTALS FOR ADHESIVE ANCHOR PRODUCTS SHALL INCLUDE ICC-ES SERVICE REPORTS. STRICTLY FOLLOW THE MANUFACTURER'S SPECIFICATIONS AND INSTALLATION INSTRUCTIONS. ACCEPTABLE ADHESIVE PRODUCTS ARE:
   FOR CONCRETE ANCHORING:
   HILTI HY200 SAFE SET, HILTI HIT RE500-SD, SIMPSON STRONG-TIE SET-XP, SIMPSON STRONG-TIE AT-XP, REDHEAD G5, POWERS AC 100+ OR APPROVED EQUAL.
   FOR HOLLOW CMU ANCHORING:
   SIMPSON STRONG-TIE SET, HILTI HY70 OR APPROVED EQUAL.
   ACCEPTABLE MECHANICAL POST-INSTALLED ANCHORS:
   FOR CONCRETE ANCHORING:
   HILTI KWIK BOLT TZ, HILTI KWIK BOLT 3, HILTI KWIK HUS EZ, SIMPSON STRONG-BOLT, SIMPSON TITEN HD OR APPROVED EQUAL
   FOR HOLLOW CMU ANCHORING:
   HILTI KWIK BOLT 3, SIMPSON TITEN HD, SIMPSON WEDGE-ALL OR APPROVED EQUAL
   IN USING THE ABOVE PRODUCTS, FOLLOW STRICTLY THE MANUFACTURER'S SPECIFICATIONS AND DIRECTIONS FOR MIXING AND APPLICATION. HEED ALL LABEL WARNINGS. INSTALL IN ACCORDANCE WITH APPLICABLE SAFETY LAWS.
3. ALL HOLES SHALL BE DRILLED WITH A DIAMETER NO LARGER THAN 1/8" GREATER THAN THE DIAMETER OF THE STEEL MEMBER BEING INSTALLED.
4. ALL HOLES SHALL BE CLEANED WITH COMPRESSED AIR AND SHALL BE DRY PRIOR TO INSTALLATION OF ADHESIVE. HOLES SHALL BE FREE OF ALL DELETERIOUS MATERIAL SUCH AS LAITANCE, DUST, DIRT, AND OIL.
5. CONTRACTOR PERFORMING ADHESIVE WORK SHALL BE AN APPROVED CONTRACTOR BY THE MANUFACTURER FURNISHING THE ADHESIVE MATERIALS, AND SHALL HAVE NO LESS THAN FIVE YEARS EXPERIENCE IN THE VARIOUS TYPES OF ADHESIVE RELATED WORK REQUIRED IN THIS PROJECT. A CERTIFICATION FROM THE MANUFACTURER ATTESTING TO THE TRAINING SHALL BE SUBMITTED TO THE ENGINEER/ARCHITECT ALONG WITH THE PROPOSAL TO DO THE WORK.

REPRODUCTION

1. THE USE OF REPRODUCTIONS OF THESE CONTRACT DRAWINGS BY ANY CONTRACTOR, SUBCONTRACTOR, ERECTOR, FABRICATOR, OR MATERIAL SUPPLIER IN LIEU OF PREPARATION OF SHOP DRAWINGS SIGNIFIES HIS ACCEPTANCE OF ALL INFORMATION SHOWN HEREIN AS CORRECT, AND OBLIGATES HIMSELF TO ANY JOB EXPENSE, REAL OR IMPLIED, ARISING DUE TO ANY ERRORS THAT MAY OCCUR HERE ON.

GRANULAR BASE AND BACKFILL MATERIAL

1. GRANULAR BASE AND BACKFILL MATERIAL SHALL BE BANK RUN GRAVEL OR SAND, OR PROCESSED STONE MEETING THE GRADATION CRITERIA OF ASTM D 2487 FOR WELL GRADED GRAVELS (GW) OR SAND (SW OR SP). MAXIMUM PARTICLE SIZE SHALL PASS A 2 INCH SIEVE.
2. THE MATERIAL SHALL CONTAIN LESS THAN 15 PERCENT FINES PASSING THE NO. 200 SIEVE, AND SHALL HAVE A MAXIMUM PLASTICITY INDEX OF SIX.
3. GRANULAR MATERIAL FOUND ON THE SITE MAY BE USED FOR BACKFILL MATERIAL SUBJECT TO THE APPROVAL OF THE GEOTECHNICAL ENGINEER.

CONCRETE FORMWORK

1. THE DESIGN AND CONSTRUCTION OF ALL FORMWORK SHALL CONFORM TO THE LATEST EDITION OF ACI 318 CHAPTER 6 AND THE RECOMMENDED PRACTICE FOR CONCRETE FORMWORK ACI-347.
2. CONSTRUCT FORMWORK SO CONCRETE MEMBERS AND STRUCTURES ARE OF SIZE, SHAPE, ALIGNMENT, ELEVATION, AND POSITION INDICATED, WITHIN TOLERANCE LIMITS OF ACI 117.
3. FORMS FOR CONCRETE WORK SHALL BE FABRICATED FROM SMOOTH, UNDAMAGED PLYWOOD, METAL OR MULTI-USE FIBERGLASS FORMS. FORMS SHALL BE OF ADEQUATE GAGE OR THICKNESS TO SUPPORT THE WEIGHT OF WET CONCRETE AND PROPERLY BRACED TO MINIMIZE DEFLECTION FOR THE PROPER APPEARANCE OF THE FINISHED CONCRETE.
4. FORMWORK AND SUPPORTS SHALL BE DESIGNED BY A FIRM EXPERIENCED IN FORMWORK DESIGN. ALL ELEVATED FORMWORK SHOP DRAWINGS SHALL BE SIGNED AND SEALED BY AN ENGINEER REGISTERED IN THE STATE OF THE PROJECT.
5. PARTING COMPOUND FOR FORMWORK SHALL BE WAX FREE, CHEMICALLY NEUTRAL AND NON-STAINING AND SHALL PREVENT BONDING TO CONCRETE. COMPOUND SHALL BE EQUAL TO EUCO SUPER-SLIP BY EUCLID CHEMICAL CO. AUTOMOBILE MOTOR OIL AND SIMILAR SUBSTANCES ARE NOT PERMITTED.
6. FORM TIES FOR EXPOSED CONCRETE SHALL BE STAINLESS STEEL OR GALVANIZED TWISTED-WIRE WITH INTEGRAL PULL CONE. SNAPPED OR TWISTED TIES SHALL NOT EXTEND ANY CLOSER THAN 1 INCH TO THE FINISH SURFACE OF THE CONCRETE.
7. INSTALL ALL PIPE CHASES, CONDUITS, ELECTRICAL BOXES, CAVITIES, SLOTS, SLEEVES, WATER STOPS, AND OTHER EMBEDDED PARTS AS REQUIRED.
8. EXPOSED CONCRETE FORMED SURFACES SHALL RECEIVE A SMOOTH FLAT FORMED SURFACE; ALL TIE HOLES, HONEY COMBING AND ROUGH AREAS TO BE PATCHED TO MATCH SURROUNDING SURFACES.
9. THE SIDES OF FOOTINGS MAY BE EARTH-FORMED IF THE EXCAVATION CAN BE KEPT VERTICAL, CLEAN AND STABLE, OTHERWISE FORMS ARE REQUIRED.
10. ALL CORNERS AND EDGES SHALL BE CHAMFERED 1 INCH (ON THE SLOPE) OR 3/4 INCH HORIZONTAL/VERTICAL.
11. EXPOSED CONCRETE SURFACES SHALL BE FINISHED AS FOLLOWS:
    A. AREAS NOT EXPOSED TO VIEW (SUCH AS IN CONTACT WITH EARTH OR COVERED WITH A FINISH) SHALL HAVE A FORMWORK SURFACE FINISH -1.0 AS DEFINED IN ACI 301.
       1. PATCH ALL VOIDS LARGER THAN 1.5" WIDE OR 0.5" DEEP.
       2. REMOVE ALL PROJECTIONS LARGER THAN 1".
       3. TIE HOLES SHALL BE PATCHED.
    B. AREAS EXPOSED TO VIEW (INCLUDING AREAS THAT WILL BE UNDER WATER INSIDE A TANK) SHALL HAVE A FORMWORK SURFACE FINISH -3.0 AS DEFINED IN ACI 301.
       1. PATCH ALL VOIDS LARGER THAN ¾" WIDE OR 1/2" DEEP.
       2. REMOVE ALL PROJECTIONS LARGER THAN 1/8".
       3. PATCH ALL TIE HOLES.
       4. SURFACE TOLERANCE SHALL MEET CLASS A AS DEFINED IN ACI 117.
          A. ABRUPT IRREGULARITIES SHALL BE MEASURED WITHIN 1" OF THE IRREGULARITY AND SHALL NOT EXCEED 1/8".
          B. GRADUAL SURFACE IRREGULARITY SHALL BE MEASURED BY DETERMINING THE GAP BETWEEN CONCRETE SURFACES OF A 5' STRAIGHTEDGE AND SHALL NOT EXCEED 1/8".
    C. PROVIDE A MOCKUP OF THE CONCRETE SURFACE FOR APPEARANCE AND TEXTURE.
    D. ALL FORMWORK BUTT JOINTS SHALL ALIGN IN BOTH HORIZONTAL AND VERTICAL DIRECTIONS.

1

ISOLATION, CONTRACTION, CONSTRUCTION AND EXPANSION JOINTS

1. PREFORMED JOINT FILLER SHALL BE 1/4 INCH ON ALL INTERIOR WORK AND 1/2 INCH ON EXTERIOR WORK. JOINT FILLER SHALL CONFORM TO ASTM D1751 HAVE A MINIMUM COMPRESSIVE STRENGTH OF 600 PSI, COMPRESS 50 PERCENT UNDER A 1,250 PSI OF PRESSURE AND BE EQUAL TO "SEALTIGHT FIBRE EXPANSION JOINT FILLER" BY W.R. MEADOWS.
2. JOINT SEALANT FOR SLABS WHERE CALLED FOR ON THE DRAWINGS SHALL BE A TWO PART POLYURETHANE SEALANT CONFORMING TO FEDERAL SPEC TT-S-00227E; THC-900 SELF LEVELING SEALANT BY TREMCO MANUFACTURING OR EQUAL
3. JOINT SEALANT FOR WALLS WHERE CALLED FOR ON THE DRAWINGS SHALL BE SILICONE; MONO BY TREMCO OR EQUAL.
4. CONTRACTION JOINTS IN SLABS SHALL BE SAW CUT AS DETAILED USING A WET SAWCUTTING METHOD AS SOON AS THE CONCRETE WILL SUPPORT THE SAWING EQUIPMENT AND WILL NOT RAVEL DURING THE SAWING OPERATION. IN NO CASE SHALL THE SAWING BE LATER THAN 12 HOURS AFTER PLACING THE CONCRETE.

FINAL DESIGN - NOT RELEASED FOR CONSTRUCTION

WK DICKSON
community infrastructure consultants
616 COLONNADE DRIVE
CHARLOTTE, NC 28205
(t)704-334-5348
(f)704-334-0078
WWW.WKDICKSON.COM
NC LICENSE NO.F-0374

NORTH CAROLINA PROFESSIONAL ENGINEER
SEAL 024096
MICHAEL A. GARDINA
01/20/2020
PROFESSIONAL SEAL

STEWART
101 N TRYON ST SUITE 1400
CHARLOTTE, NC 28202
T 704.334.7925
FIRM LICENSE #: C-1051
www.stewartinc.com
PROJECT #: R17042

REVISION RECORD

NO.	DATE	DESCRIPTION	BY
1	01/20/20	Formwork Revision	
	10/09/18	Issue for Owner and NCDEQ Review	

PROJECT NAME: KILLIAN CREEK WWTP PHASE 3 UPGRADE

DRAWING TITLE: GENERAL NOTES

PROJ. MGR.:	MAG
DESIGN BY:	BK
DRAWN BY:	DJB
PROJ. DATE:	OCT. 09, 2018

DRAWING NUMBER:

S.0.1

WKD PROJ. NO.:

20170294.00.CL

COPYRIGHT ©, W.K. DICKSON & CO., INC. ALL RIGHTS RESERVED. REPRODUCTION OR USE OF THE CONTENTS OF THIS DOCUMENT; ADDITIONS OR DELETIONS TO THIS DOCUMENT, IN WHOLE OR IN PART, WITHOUT WRITTEN CONSENT OF W.K. DICKSON & CO., INC., IS PROHIBITED. ONLY COPIES FROM THE ORIGINAL OF THIS DOCUMENT, MARKED WITH AN ORIGINAL SIGNATURE AND SEAL SHALL BE CONSIDERED TO BE VALID, TRUE COPIES.

FILE PATH:L:\Projects\LINCL\20170294\00CL - Killian Creek WWTP Ph 3 Upgrade Const\CADD\Plan Set\TBD-20170294_G_SHT_Headworks-hqah45kh.dwgL:\Projects\LINCL\20170294\00CL - Killian Creek WWTP Ph 3 Upgrade Const\CADD\Plan Set\TBD-20170294_G_SHT_Headworks-hqah45kh.dwg, NSONGCO, 3/14/2018 10:02:29 AM

CONCRETE/REINFORCING STEEL

1. 1. ALL CONCRETE SHALL CONFORM TO THE FOLLOWING PUBLICATIONS AND COMMENTARIES (LATEST EDITION):
   A. ACI 350: CODE REQUIREMENTS FOR ENVIRONMENTAL ENGINEERING CONCRETE STRUCTURES
   B. ACI 117: SPECIFICATIONS FOR TOLERANCES FOR CONCRETE CONSTRUCTION AND MATERIALS.
   C. ACI 301: SPECIFICATIONS FOR STRUCTURAL CONCRETE FOR BUILDINGS
   D. ACI 305: RECOMMENDED PRACTICE FOR HOT WEATHER CONCRETING
   E. ACI 306: RECOMMENDED PRACTICE FOR COLD WEATHER CONCRETING
   F. ACI 315: DETAILS AND DETAILING OF CONCRETE REINFORCEMENT
   G. ASTM C94 SPECIFICATION FOR READY-MIXED CONCRETE
2. CONCRETE COMPRESSIVE STRENGTH IN 28 DAYS:

BUILDING FOUNDATIONS	3,000 PSI, NORMAL WEIGHT - MAX W/C RATIO=0.58 - SLUMP=3 IN - NO AIR
FOUNDATION WALLS, RETAINING WALLS, TANK SLAB AND WALLS	4,500 PSI, NORMAL WEIGHT - MAX W/C RATIO=0.45 - SLUMP=4 IN - WITH AIR
INTERIOR SLABS-ON-GRADE	4,000 PSI, NORMAL WEIGHT - MAX W/C RATIO=0.50 - SLUMP=4 IN - NO AIR
EXTERIOR SLABS-ON-GRADE	4,500 PSI, NORMAL WEIGHT - MAX W/C RATIO=0.45 - SLUMP=4 IN - WITH AIR
SUSPENDED/ELEVATED STRUCTURAL SLABS	4,000 PSI, NORMAL WEIGHT - MAX W/C RATIO=0.50 - SLUMP=4 IN - NO AIR

3. WATER MAY ONLY BE ADDED AT THE SITE PROVIDED THE CONCRETE SLUMP AND WATER TO CEMENT RATIOS SPECIFIED IN THE APPROVED MIX DESIGN ARE COMPLIED WITH. THE TESTING LABORATORY HAS FULL AUTHORITY TO REJECT CONCRETE THAT DOES NOT MEET THE SPECIFICATIONS (INCLUDING ACI REQUIREMENTS).
4. CONTRACTOR SHALL SUBMIT MIX DESIGNS TO THE ENGINEER FOR EACH SPECIFIED MIX. EACH SUBMITTAL SHALL INCLUDE PROPOSED MIX DESIGN, SUPPORTING PRODUCT DATA FOR ADMIXTURES, PROPOSED SLUMP AND AIR CONTENT, WATER/CEMENT RATIO, 30 COMPRESSION TEST RESULTS WITH ACTUAL SLUMP AND STANDARD DEVIATION FOR COMPRESSION TEST RESULTS IN ACCORDANCE WITH CHAPTER 5 OF ACI 318. IF DIFFERENT MANUFACTURERS ARE PROPOSED FOR DIFFERENT ADMIXTURE, CONTRACTOR SHALL SUBMIT LETTERS OF CERTIFICATION FROM EACH MANUFACTURER STATING THAT THEIR PRODUCT IS COMPATIBLE WITH THE OTHER PRODUCTS.
5. ALL CONCRETE SHALL BE PLACED WITHIN 90 MINUTES OF BATCH TIME. THE TESTING LABORATORY HAS FULL AUTHORITY TO REJECT ANY LOAD THAT DOES NOT COMPLY.
6. CEMENT SHALL CONFORM TO ASTM C150, TYPE 1. ONE BRAND OF CEMENT ONLY SHALL BE USED THROUGHOUT THE ENTIRE WORK. FLY ASH (IF USED) SHALL BE ASTM C618 CLASS C OR F AND LIMITED TO 20% MAXIMUM BY WEIGHT.
7. FINE AGGREGATE SHALL BE CLEAN, UNCOATED SAND CONFORMING TO ASTM C33.
8. COARSE AGGREGATE SHALL BE CRUSHED STONE CONFORMING TO ASTM C33, CLASS 3S. THE LARGEST AGGREGATE SIZE SHALL BE 3/4 OF THE SMALLEST SPACING BETWEEN REINFORCING (3/4 INCH MAXIMUM SIZE UNLESS DETERMINED OTHERWISE). SLAB ON GRADE CONCRETE MAXIMUM AGGREGATE SIZE IS 1 INCH TO MINIMUMIZE SHRINKAGE. WHEN COMBINING 2 OR MORE AGGREGATE A COMBINED GRADATION SHALL BE SUBMITTED FOR APPROVAL. THE FINAL GRADATION SHALL CONFORM TO THE GRADING REQUIREMENTS OF ASTM C33.
9. THE COMBINED FINE AND COURSE AGGREGATE GRADATIONS FOR ALL FLAT WORK SHALL COMPLY FOR ACI 302 (GUIDE FOR CONCRETE FLOOR AND SLAB CONSTRUCTION) SECTION 5.4.3. SUBMIT COMBINED GRADATION WITH MIX DESIGNS.
10. WATER TO BE POTABLE COMPLYING WITH ASTM C94.
11. ALL CONCRETE SHALL CONTAIN A TYPE "A" WATER REDUCER CONFORMING TO ASTM C494 TYPE "A". FOR PUMPED MIX DESIGNS USE HIGH RANGE WATER REDUCER CONFORMING TO ASTM C494, TYPE
12. NO CALCIUM CHLORIDE IS PERMITTED
13. ALL EXTERIOR CONCRETE SHALL CONTAIN 6.0% +/- 1.5% ENTRAINED AIR. THE AIR CONTENT SHALL BE ACHIEVED BY ADDING AN AIR-ENTRAINING AGENT CONFORMING TO ASTM C260
14. REINFORCING:
    TYPICAL - ASTM A615, GRADE 60
    WELDED WIRE FABRIC - ASTM A1064 (FLAT SHEETS ONLY)
15. GROUT UNDER BASE PLATES TO BE HIGH STRENGTH (5,000 PSI), NON-SHRINK, NON-METALIC.
16. REFER TO THE DRAWINGS FOR REINFORCING LAP REQUIREMENTS. WHERE LAP SPLICES ARE NOT SHOWN, LAP PER ACI 318 OR CRSI STANDARDS.
17. LAP WELDED WIRE FABRIC SHEETS 8" MINIMUM.
18. CLEAR COVER FROM FACE OF CONCRETE:
    CAST IN PLACE CONCRETE (MEASURE TO OUTERMOST REINFORCING) -

CONCRETE CAST AGAINST AND EXPOSED TO EARTH	3"
CONCRETE EXPOSED TO EARTH/WEATHER	2" FOR #6 BARS AND LARGER
	1 1/2" ELSE
CONCRETE NOT EXPOSED TO EARTH/WEATHER	3/4" FOR SLABS AND WALLS
	1 1/2" FOR BEAMS AND COLUMNS (TO TIES)

19. PROVIDE REINFORCING IN SLABS ON GRADE, 1-1/2" FROM TOP OF SLAB:

4" SLABS	6x6-W2.1xW2.1
5" SLABS	6x6-W2.9xW2.9
6" SLABS	#3@12"OC EACH WAY (IF DRAWINGS NOTE REINFORCING FOR A SLAB, THEY GOVERN OVER THIS NOTE)
7" SLABS AND THICKER	SEE DRAWINGS

CONCRETE/REINFORCING STEEL

20 WALL FOOTING REINFORCING SHALL BE CONTINUOUS THROUGH ADJACENT COLUMN FOOTINGS.
21. BAR SUPPORTS FOR CONCRETE EXPOSED TO VIEW SHALL HAVE PLASTIC COATED LEGS OR BE HOT DIP GALVANIZED AFTER FABRICATION.
22. MECHANICAL AND ELECTRICAL CONDUIT IN SLABS ON GRADE AND ELEVATED SLABS SHALL RUN UNDER TOP LAYER OF SLAB REINFORCING. PROVIDE A MINIMUM OF 1-1/2" CLEAR BETWEEN CONDUITS AND BETWEEN REINFORCING AND ADJACENT CONDUITS PARALLEL TO REINFORCING. IF MAXIMUM SIZE OF CONDUIT EXCEEDS ONE THIRD OF THE SLAB DEPTH, ADDITIONAL FRAMING OR REINFORCING MAY BE NECESSARY AT ENGINEER'S DISCRETION.
23. HEADED CONCRETE ANCHORS SHALL CONFORM TO THE REQUIREMENTS OF ASTM A108, GRADES 1010, 1015, 1017, OR 1020. STUDS SHALL BE AUTOMATICALLY END WELDED IN THE SHOP OR FIELD IN ACCORDANCE WITH THE MANUFACTURER'S RECOMMENDATIONS.
24. EMBED PLATES MUST BE SET IN THE FORM BEFORE POURING CONCRETE, NOT PLACED INTO TOP OF WET CONCRETE. THE CONTRACTOR SHALL CONTACT THE ENGINEER FOR CORRECTIVE DETAILS FOR ANY EMBED PLATES LEFT OUT OF CONCRETE POURS.
25. FOR SLABS ON GRADE, SLAB AND FOOTING REINFORCING SHALL BE HELD IN PLACE BY BAR SUPPORTS WITH SAND PLATES MADE OF CRSI CLASS 3 BRIGTHT STEEL OR GALVANIZED WIRE, OR PRECAST CONCRETE BAR SUPPORTS AS DESCRIBED IN CHAPTER 3 OF THE CRSI MANUAL OF STANDARD PRACTICE. BAR SUPPORTS SHALL BE SPACED AT A MAXIMUM OF 4'-0"OC BOTH WAYS. ROCKS, CMU, OR CLAY BRICK WILL NOT BE USED AS SUPPORTS.
26. ALL REINFORCING SHALL BE DETAILED, FABRICATED AND INSTALLED IN ACCORDANCE WITH THE MANUAL OF STANDARD PRACTICE FOR REINFORCED CONCRETE CONSTRUCTION OF CRSI (CRSI 63 " RECOMMENDED PRACTICE FOR PLACING REINFORCING BARS" AND CRSI 65 RECOMMENDED PRACTICE FOR PLACING BAR SUPPORTS, SPECIFICATIONS AND NOMENCLATURE") AND THE MANUAL OF STANDARD PRACTICE FOR DETAILING REINFORCED CONCRETE STRUCTURES OF ACI.
27. ALL BAR SPLICE LENGTHS SHALL BE CLASS "B" SPLICE AS DEFINED BY ACI 318 LATEST EDITION.
28. ALL WELDED WIRE FABRIC SPLICES SHALL NOT BE LESS THAN (2) SPACINGS OF CROSS WIRES, OR 8 INCH, WHICHEVER IS GREATER.
29. PROVIDE CORNER BARS AT ALL LOCATIONS WHERE REINFORCEMENT CHANGES DIRECTION.
30. ALL WALL, FOUNDATION SLAB AND STRIP FOOTING REINFORCEMENT SHALL BE CONTINUOUS THROUGH PIERS AND COLUMN SPREAD FOOTINGS.
31. PULLING UP WELDED WIRE FABRIC IS NOT PERMITTED.
32. FIELD BENDING OR TWISTING OF REINFORCING BARS IS PROHIBITED UNLESS APPROVED BY THE ENGINEER IN WRITING. HOWEVER, THE FOLLOWING SCENARIOS WILL BE PERMITTED:
    A. TOP OF WALL OR COLUMNS WITH VERTICAL REINFORCING OF #5 OR SMALLER MAY BE FIELD BENT 90 DEGREES PROVIDED THE BENDING RADIUS DOES NOT EXTEND INTO THE TOP OF THE CONCRETE AND BAR TEMPERATURE IS ABOVE 32 DEGREES F. ALL BENDING MUST OCCUR OUTSIDE OF THE CONCRETE. REINFORCING MAY ONLY BE BENT ONE TIME. A REBAR BENDER SHALL BE USED. IF CRACKING OF THE TOP OF WALL OR COLUMN OCCURS, ALL CRACKS SHALL BE FILLED WITH A VERY HIGH VISCOSITY EPOXY REPAIR PRODUCT APPROVED BY THE ENGINEER.
    B. TOP OF WALL OR COLUMNS WITH HOOKED DOWELS THAT EXTEND HORIZONTAL FOR SUBSEQUENT SLAB POUR ARE TOO HIGH AND WILL STICK OUT OF SLAB. THE CAN BE FIELD BENT TO LOWER THE TOP ELEVATION OF THE REINFORCING PROVIDED THE NEW RADIUS DOES NOT EXTEND INTO THE CONCRETE. IF THE REINFORCING IS #6 OR LARGER, THEN HEAT REINFORCING TO BETWEEN 1100 DEGREES AND 1200 DEGREES F (MAXIMUM OF 1500 DEGREES F) AND BEND TO THE CORRECT HEIGHT. THE HEATED AREA SHALL EXTEND 5 BAR DIAMETERS IN EACH DIRECTION BUT IN NO CASE SHALL THE HEAT EXTEND INTO THE CONCRETE. IF CRACKING OF THE TOP OF WALL OR COLUMN OCCURS, ALL CRACKS SHALL BE FILLED WITH A VERY HIGH VISCOSITY EPOXY REPAIR PRODUCT APPROVED BY THE ENGINEER.
33. THE CONTRACTOR SHALL ASSUME CONCRETE OVERAGES IN ELEVATED DECK POURS DUE TO MEMBER AND DECK DEFLECTIONS. UNLESS SHOWN ON PLANS, BEAMS ARE NOT CAMBERED. CONCRETE OVERAGES MAY BE CALCULATED BY THE CONTRACTOR FOR BEAM DEFLECTIONS EQUALING L/300 INCLUDING ADDITIONAL DEFLECTIONS DUE TO PONDING AND DECK DEFLECTIONS PER SDI.
34. REBAR SHALL NOT BE HEATED WITH A TORCH IN THE FIELD.
35. THE CONTRACTOR SHALL NOTIFY THE ENGINEER FAR ENOUGH IN ADVANCE (48 HOURS) OF EACH CONCRETE POUR TO ALLOW AMPLE TIME TO CHECK THE LAYOUT OF THE STEEL BEFORE THE BEGINNING OF THE ACTUAL POUR, BUT NOT PRIOR TO 90% OF THE STEEL HAVING BEEN PLACED.
36. CONCRETE SLABS SHALL BE WET CURED BY EITHER THOROUGHLY WETTING DOWN THE CONCRETE AND COVERING WITH CURING SHEETS MADE OF A COMPOSITE 10 OUNCE BURLAP COMPLYING WITH AASHTO M182, CLASS 2 MADE FROM JUTE OR KENAF AND 4 MIL WHITE POLYETHYLENE MOISTURE RETAINING COVER COMPLYING WITH ASTM C171. THE CURING SHEETS SHALL BE REMAIN CONTINUOUSLY IN PLACE AND WET FOR A PERIOD OF 7 DAYS. PORTIONS OF THE CURING SHEETS MAY BE REMOVED FOR SAW CUTTING. IT IS EXTREMELY IMPORTANT TO MAINTAIN THE CURING SHEETS IN PLACE AND WET FOR THE PERIOD.
37. ALL OTHER CONCRETE OR AS AN OPTION FOR SLABS, SURFACES SHALL BE CURED USING A CURING COMPOUND MADE OF A STABILIZED CHLORINATED RUBBER COMPOUND COMPLYING WITH ASTM C309, TYPE 1, CLASS B. IF FLOOR COVERING OR OTHER APPLIED MATERIAL IS TO BE APPLIED, THEN CONTRACTOR SHALL COORDINATE IF REMOVAL OF CURING COMPOUND IS REQUIRED FOR PROPER INSTALLATION OF COVERING OR COATING.
38. PATCHING CONCRETE OR POURING NEW CONCRETE TO EXISTING CONCRETE SHALL BE BONDED WITH A CONCRETE ADHESIVE MADE OF 2 COMPONENTS, 100% SOLIDS AND 100% REACTIVE EPOXY AND SUITABLE FOR USE ON DRY OR DAMP SURFACES EQUAL TO "SIKADURE 32 HI-MOD" BY SIKA CHEMICAL CO. THE ENTIRE SURFACE SHALL BE PREPARED IN ACCORDANCE WITH THE MANUFACTURER'S REQUIREMENTS.
39. ALL CONCRETE FLOOR SLABS SHALL BE FINISHED TO A FLATNESS OF FF=30 AND FL=25 OR BETTER AS MEASURED IN ACCORDANCE WITH ASTM E1155 "STANDARD TEST METHOD FOR DETERMINING FLOOR FLATNESS AND LEVELNESS USING THE "F NUMBER" SYSTEM". PITCH TO DRAIN AS SHOWN ON THE DRAWINGS.
40. ALL INTERIOR SLABS SHALL RECEIVE A STEEL TROWEL FINISH UNLESS NOTED OTHERWISE. ALL EXTERIOR SLABS AND WALKING SURFACES SHALL RECEIVE A LIGHT BROOM FINISH.
41. ALL FINS AND PROJECTIONS SHALL BE REMOVED AND CONCRETE PATCHED IF REQUIRED. ALL TIE HOLES SHALL BE PATCHED WITH PORTLAND CEMENT GROUT SO AS THE FINAL COLOR SHALL MATCH THE WALL.
42. ALL HONEYCOMBS SHALL BE CUT BACK TO SOUND CONCRETE AND REMOVED. PATCH AREA WITH CONCRETE ADHESIVE AND OR GROUT SO FINAL COLOR MATCHES SURROUNDING CONCRETE.
43. CONTRACTOR SHALL SUBMIT TO THE ENGINEER ALL CONSTRUCTION JOINT LOCATIONS PRIOR TO ANY CONSTRUCTION. ONLY APPROVED LOCATIONS WILL BE ACCEPTABLE.
44. CONTRACTOR SHALL COORDINATE ALL EMBEDDED ITEMS, SLEEVES AND SLAB RECESSES WITH ALL TRADES AND ARCHITECTURAL, MECHANICAL AND ELECTRICAL DRAWINGS. NO SLEEVE, OPENING OR INSERT IS PERMITTED IN A BEAM, JOIST OR COLUMN WITHOUT WRITTEN APPROVAL FROM THE ENGINEER.
45. NOTIFY ENGINEER IMMEDIATELY WITH CONFLICTS REGARDING CONCRETE CONSTRUCTION, INSERTS, OPENINGS, SLEEVES, REINFORCING BARS, ANCHOR BOLTS, ETC.
46. IN THE EVENT THERE ARE EMBEDS, SLEEVES, ENCASEMENTS, ETC. THAT ARE NOT SPECIFICALLY DETAILED BUT ARE REQUIRED IN ANY CONCRETE ELEMENT, THAT ELEMENT SHALL BE ENLARGED OR THICKENED AS REQUIRED TO PROVIDE THE CODE MINIMUM COVER REQUIREMENTS FOR THE ITEM OR REINFORCING
47. TESTING AND INSPECTION AS PART OF A QUALITY ASSURANCE PROGRAM SHALL BE AS FOLLOWS:
    A. OBTAIN ONE COMPOSITE SAMPLE FOR EACH DAY'S POUR OF EACH CONCRETE MIXTURE, NOR LESS THAN ONE COMPOSITE SAMPLE FOR EACH 50 CY UP TO 100CY. ONCE THE POUR IS OVER 100 CY., THEN ONE SAMPLE FOR EVERY 100 CY AFTER.
    B. EACH SAMPLE SHALL CONTAIN (4) 6"X12" TEST CYLINDERS OR (5) 4"X8" CYLINDERS. ONE CYLINDER SHALL BE TESTED AT 7 DAYS AND (2) 6"X12" OR (3) 4"X8" CYLINDERS AT 28 DAYS. THE REMAINING CYLINDER SHALL BE A RESERVE FOR 56 DAYS IF NEEDED.

FINAL DESIGN - NOT RELEASED FOR CONSTRUCTION

WK DICKSON
community infrastructure consultants
616 COLONNADE DRIVE
CHARLOTTE, NC 28205
(t)704-334-5348
(f)704-334-0078
WWW.WKDICKSON.COM
NC LICENSE NO.F-0374

NORTH CAROLINA PROFESSIONAL ENGINEER
SEAL 024096
MICHAEL A. GARDINA
01/20/2020
PROFESSIONAL SEAL

STEWART
101 N TRYON ST SUITE 1400
CHARLOTTE, NC 28202
T 704.334.7925
FIRM LICENSE #: C-1051
www.stewartinc.com
PROJECT #: R17042

REVISION RECORD

NO.	DATE	DESCRIPTION	BY
	10/09/18	Issue for Owner and NCDEQ Review	

PROJECT NAME: KILLIAN CREEK WWTP PHASE 3 UPGRADE

DRAWING TITLE: GENERAL NOTES

PROJ. MGR.:	MAG
DESIGN BY:	BK
DRAWN BY:	DJB
PROJ. DATE:	OCT. 09, 2018

DRAWING NUMBER:

S.0.2

WKD PROJ. NO.:

20170294.00.CL

COPYRIGHT ©, W.K. DICKSON & CO., INC. ALL RIGHTS RESERVED. REPRODUCTION OR USE OF THE CONTENTS OF THIS DOCUMENT, ADDITIONS OR DELETIONS TO THIS DOCUMENT, IN WHOLE OR IN PART, WITHOUT WRITTEN CONSENT OF W.K. DICKSON & CO., INC., IS PROHIBITED. ONLY COPIES FROM THE ORIGINAL OF THIS DOCUMENT, MARKED WITH AN ORIGINAL SIGNATURE AND SEAL SHALL BE CONSIDERED TO BE VALID, TRUE COPIES.

STRUCTURAL MASONRY

1. LOAD-BEARING MASONRY WALLS, PILASTERS, PIERS, RETAINING WALLS, FOUNDATION WALLS AND ANY OTHER MASONRY SO DESIGNATED ON DRAWINGS IS CONSIDERED HERE TO BE STRUCTURAL MASONRY.
2. ALL MASONRY SHALL CONFORM TO THE FOLLOWING PUBLICATIONS AND COMMENTARIES (LATEST EDITION):
   A. NATIONAL CONCRETE MASONRY ASSOCIATION'S SPECIFICATION FOR THE DESIGN AND CONSTRUCTION OF LOAD-BEARING CONCRETE MASONRY.
   B. PORTLAND CEMENT ASSOCIATION'S CONCRETE MASONRY HANDBOOK.
   C. ACI 530; BUILDING CODE REQUIREMENTS FOR MASONRY STRUCTURES.
   D. ACI 530.1: SPECIFICATIONS FOR MASONRY STRUCTURES.
3. REQUIRED COMPRESSIVE STRENGTH OF MASONRY UNITS:
   SOLID CLAY UNITS - 6,200 PSI
   CONCRETE UNITS - 1,900 PSI ON NET AREA IN ACCORDANCE WITH ASTM C140
4. CONCRETE MASONRY UNITS (CMU) SHALL BE LIGHT WEIGHT (105 PCF) GRADE N, CONFORMING TO ASTM C90. REFER TO ARCHITECTURAL DRAWINGS AND SPECIFICATIONS FOR UNIT SIZE, FACE, COLOR, JOINTING, ETC.
5. MORTAR SHALL BE TYPE S, ASTM C270.
6. GROUT FOR REINFORCED MASONRY SHALL MEET ASTM C476. MINIMUM 28-DAY COMPRESSIVE STRENGTH SHALL BE 2000 PSI.
7. MINIMUM 28-DAY COMPRESSIVE STRENGTH (f'm) OF THE MASONRY WALLS SHALL BE 2000 PSI. MASONRY STRENGTH SHALL BE DETERMINED BY THE UNIT STRENGTH METHOD OR THE PRISM TEST METHOD AS DESCRIBED BY ACI 530.
8. REINFORCING:
   TYPICAL - ASTM A615, GRADE 60.
9. REFER TO THE DRAWINGS FOR REINFORCING LAP TYPICAL DETAIL AND SCHEDULE REQUIREMENTS. WHERE LAP SPLICES ARE NOT SHOWN, LAP 72 BAR DIAMETERS PER ACI 530 AS MODIFIED BY THE STATE BUILDING CODE, UNLESS NOTED ON DRAWINGS.
10. MAXIMUM HEIGHT TO WHICH MASONRY SHALL BE LAID BEFORE GROUTING IS 5 FEET ABOVE CONSTRUCTION SURFACE OR PREVIOUSLY GROUTED MASONRY. IF GROUT POUR HEIGHT EXCEEDS 5 FEET, THEN "HIGH LIFT" GROUTING PROCEDURE MUST BE FOLLOWED. PROVIDE CLEANOUT OPENINGS AT THE BOTTOM OF EACH GROUT LIFT. CLEANOUT OPENINGS SHALL BE PROVIDED AT EACH CELL TO BE FILLED WITH GROUT.
11. ALL GROUT PLACED OVER 12" IN HEIGHT SHALL BE MECHANICALLY CONSOLIDATED DURING GROUTING. GROUT SHALL BE RECONSOLIDATED BY MECHANICAL VIBRATION AFTER INITIAL WATER LOSS AND SETTLEMENT HAS OCCURRED.
12. MAXIMUM GROUT LIFT (GROUT POURED IN ONE CONTINUOUS OPERATION) IS 5 FEET. THIS LIMIT ALSO APPLIES TO "HIGH LIFT" GROUTING.
13. MASONRY CELLS TO BE GROUTED SHALL HAVE CROSS WEB BEDDING.
14. USE FINE GROUT FOR ISOLATED AREAS WITH SMALL VOIDS AND REPAIR WORK AND SHALL CONTAIN SAND ONLY WITH A 3/8 INCH MAXIMUM AGGREGATE SIZE MEETING THE REQUIREMENTS OF ASTM C404.
15. ALL GROUT SHALL HAVE A SLUMP BETWEEN 8 INCH TO 11 INCH SLUMP.
16. REINFORCE MASONRY WHERE SHOWN ON STRUCTURAL DRAWINGS. TIE REINFORCING IN POSITION AND PLACE GROUT AROUND REINFORCING. DO NOT PUSH REINFORCING DOWN INTO PREVIOUSLY PLACED GROUT FILL. SET BOLTS SIMILARLY.
17. TIE MASONRY WYTHES WITH HORIZONTAL REINFORCING AS SPECIFIED.
18. PROVIDE VERTICAL BARS, SIZE MATCHING WALL REINFORCING, AT ALL CORNERS, ENDS OF WALLS, EACH SIDE OF CONTROL JOINTS AND EACH SIDE OF WALL OPENINGS. TIE EACH BAR TO THE FOUNDATION WITH A MATCHING DOWEL. SEE ARCHITECTURAL DRAWINGS FOR LOCATIONS OF CONTROL JOINTS.
19. ALL CORNERS AND INTERSECTIONS OF STRUCTURAL MASONRY WALLS SHALL BE CONSTRUCTED BY INTERLOCKING COURSES.
20. ALL LINTELS TO BEAR 8" MINIMUM EACH SIDE OF OPENING, UNLESS NOTED OTHERWISE.
21. GROUT ALL MASONRY WALLS AND CAVITY BELOW GRADE SOLID. GROUT ALL WALLS ABOVE GRADE AT THE REINFORCED CELLS (MIN) OR AS INDICATED IN SPECIFIC SECTIONS.
22. ONE 3/4" DIAMETER (MAXIMUM) VERTICAL CONDUIT ALLOWED IN ANY REINFORCED CELL PROVIDED 1" CLEAR IS MAINTAINED BETWEEN REINFORCING AND CONDUIT. NO OTHER VERTICAL OR HORIZONTAL CONDUITS, PIPES, OR SLEEVES SHALL BE LOCATED IN REINFORCED CELLS UNLESS OTHERWISE APPROVED BY THE STRUCTURAL ENGINEER. CONTRACTOR SHALL COORDINATE LAYOUT TO AVOID REINFORCED CELLS.
23. POSITION ALL VERTICAL REINFORCING WITH 9 GAGE HOT DIPPED GALVANIZED WIRE REBAR POSITIONERS AS MANUFACTURED BY HECKMAN, DUR-O-WALL OR OTHER MASONRY ACCESSORY MANUFACTURER. REBAR POSITIONERS SHALL BE POSITIONED AT THE TOP AND BOTTOM OF BAR AND AT 8 FEET ON CENTER FULL HEIGHT OF GROUT POUR.
24. HORIZONTAL JOINT REINFORCEMENT SHALL BE 9 GAUGE GALVANIZED LADDER TYPE EQUAL TO DUR-O-WALL PROVIDED AT 16 INCH ON CENTER. PROVIDE CORNER TYPE AT ALL CORNERS. CUTTING AND BENDING OF WIRE IS NOT PERMITTED
25. REINFORCE MASONRY WHERE SHOWN ON STRUCTURAL DRAWINGS. TIE REINFORCING IN POSITION AND PLACE GROUT AROUND REINFORCING. DO NOT PUSH REINFORCING DOWN INTO PREVIOUSLY PLACED GROUT FILL. SET BOLTS SIMILARLY.
26. TIE MASONRY WYTHES WITH HORIZONTAL REINFORCING AS SPECIFIED.
27. ALL REINFORCED CELLS SHALL BE CLEAN AND FREE OF ANY FOREIGN MATERIAL OF DEBRIS. REMOVE ANY INSULATING MATERIAL INCLUDING POLYSTYRENE INSULATION INSERTS PRIOR TO GROUT POUR.
28. THRU-WALL FLASHING SHALL BE INSTALLED ABOVE ALL BOND BEAMS AND LINTELS IN SINGLE WYTHE MASONRY.
29. ALL MASONRY SHALL BE STORED ON PALLETS AND COVERED WITH VISQUEEN.
30. PLACE ALL MASONRY IN RUNNING BOND WITH 3/8 INCH MORTAR JOINTS. PROVIDE COMPLETE COVERAGE FACE SHELL MORTAR BEDDING. HORIZONTAL AND VERTICAL FULLY MORTAR WEBS IN ALL COURSES OF PIERS, COLUMNS AND PILASTERS AND ADJACENT TO GROUTED CELLS.
31. ALL CORNERS AND INTERSECTIONS OF STRUCTURAL MASONRY WALLS SHALL BE CONSTRUCTED BY INTERLOCKING COURSES.
32. SEE DRAWINGS FOR MASONRY CONTRACTION JOINT LOCATIONS. SPACE AT 26 FEET ON CENTER AT EXTERIOR WALLS AND 32 FEET ON CENTER AT INTERIOR WALLS UNLESS NOTED OTHERWISE.
33. BOND BEAMS, LINTELS AND REINFORCED MASONRY WALLS SHALL BE FILLED SOLID WITH GROUT NOT MORTAR.

ALUMINUM GUARDRAIL AND HANDRAIL SYSTEMS

1. ALL ALUMINUM GUARDRAIL AND HANDRAIL SYSTEMS ARE A DELATED DESIGN MATERIAL. IT SHALL BE DESIGNED AND DETAILED BY AN ENGINEER LICENSED IN THE STATE OF THE PROJECT. THE MANUFACTURER SHALL BE A COMPANY THAT REGULARLY ENGAGES IN THE SHOP PRODUCTION OF GUARDRAIL AND HANDRAIL SYSTEMS EQUAL TO THOMPSON FABRICATING COMPANY OF BIRMINGHAM, AL.
2. THE MANUFACTURE SHALL SUBMIT CALCULATION FOR APPROVAL SEALED BY THE DELEGATED DESIGN ENGINEER FOR ALL MATERIALS, CONNECTIONS AND ASSEMBLIES. ALTERNATIVELY, TESTING BY AN INDEPENDENT LAB OR MANUFACTURE'S LAB (PROVIDED THEY MEET THE REQUIREMENTS OF THE ALUMINUM ASSOCIATION) WILL BE A SUBSTITUTE FOR SEALED CALCULATIONS AND SEALED SHOP DRAWINGS.
3. GUARDRAILS AND HANDRAILS SHALL BE DESIGNED TO RESIST A 200LB CONCENTRATED LOAD APPLIED IN ANY DIRECTION AT ANY POINT ON THE TOP RAIL OR A 50LB/FT UNIFORM LOAD APPLIED HORIZONTALLY WHICH EVER PRODUCES THE MOST STRESS. HANDRAILS SHALL ALSO BE DESIGNED FOR A 100LB/FT UNIFORM APPLIED VERTICALLY DOWNWARD AND A SIMULTANEOUSLY 50LB/FT HORIZONTAL LOAD.
4. POST SPACING SHALL NOT EXCEED 6'-0". POST AND RAILINGS SHALL BE A MINIMUM OF 1.5" DIAMETER SCHEDULE 40 PIPE ALLOY 6105-T5, ASTM-B-429 OR ASTM-B-221. DETERMINE POST SPACING BASED ON DESIGN OR TESTING BUT NOT TO EXCEED THE MAXIMUM NOTED.
5. RAILS AND POSTS SHALL BE JOINED TOGETHER WITH COMPONENTS FITTINGS. SAMPLES OF ALL COMPONENTS, BASES, TOE PLATES, AND OTHER MATERIALS SHALL BE SUBMITTED FOR APPROVAL. POP-RIVETED OR GLUED JOINTS ARE NOT ACCEPTABLE. FASTEN WITH STAINLESS STEEL HARDWARE
6. POSTS SHALL NOT INTERRUPT THE CONTINUATION OF THE TOP RAIL AT ANY POINT ALONG THE RAILING, INCLUDING CORNERS AND END TERMINATIONS COMPLYING WITH OSHA 1910.23. THE TOP SURFACE OF THE RAILING SHALL BE SMOOTH AND SHALL NOT BE INTERRUPTED BY PROJECTED FITTINGS.
7. MIDRAIL AT CORNER RETURNS SHALL BE ABLE TO RESIST A 200LB LOAD WITHOUT LOOSENING. PROVIDE CALCULATION OR TESTING TO CONFIRM COMPLIANCE.
8. CONNECTIONS AT THE BASE SHALL BE PER THE DRAWINGS. ANY DEVIATION SHALL INCLUDE CALCULATIONS FROM DELEGATED DESIGN ENGINEER FOR APPROVAL.
9. TOE PLATES SHALL CONFORM TO OSHA STANDARDS. TOE PLATE SHALL BE A MINIMUM OF 4" HIGH AND SHALL BE AN EXTRUSION THAT ATTACHES TO THE POSTS WITH CLAMPS WHICH ALLOW FOR EXPANSION AND CONTRACTION BETWEEN POSTS. TOE PLATES SHALL BE SET ¼" ABOVE THE WALKING SURFACE. TOE PLATES SHALL BE PROVIDED IN GUARDRAILS AS REQUIRED BY OSHA AND/OR AS SHOWN ON THE DRAWINGS
10. OPENINGS IN THE RAILING SHALL BE GUARDED BY A SELF-CLOSING GATE (OSHA-1910.23). SAFETY CHAINS SHALL NOT BE USED UNLESS SPECIFICALLY SHOWN ON THE DRAWINGS.
11. REMOVABLE SECTIONS OF GUARDRAIL WHERE SHOWN ON THE DRAWINGS SHALL PULL OUT OF BASE FOR EASY REMOVAL AND REPLACEMENT IN LOCATIONS NOTED ON THE DRAWINGS.
12. FINISH SHALL BE ALUMINUM ASSOCIATIONS M10-C22-A41 (215-R1). MATERIALS SHALL BE PLASTIC-WRAPPED AND REMOVED ONLY AFTER ERECTION/ASSEMBLY.
13. ALL ALUMINUM SURFACES IN CONTACT WITH CONCRETE, GROUT OR DISSIMILAR METALS SHALL BE PROTECTED WITH A COAT OF BITUMINOUS PAINT, MYLAR ISOLATORS OR OTHER APPROVED MATERIALS.

STRUCTURAL STEEL

1. STRUCTURAL STEEL:
   WIDE FLANGE SHAPES (W SECTIONS) - ASTM A992, GRADE 50 (FY=50 KSI)
   CHANNELS, ANGLES, RODS, AND BARS - A36 (FY=36 KSI)
   PLATES - ASTM A572, GRADE 50 (FY=50 KSI) OR ASTM A36 (FY=36 KSI)
   SQUARE AND RECTANGULAR TUBES - ASTM A500, GRADE B (FY=46 KSI)
   PIPES - ASTM A53, GRADE B (FY=35 KSI)
2. ANCHOR BOLTS AND THREADED RODS SHALL CONFORM TO ASTM F1554, GRADE 36.
3. DESIGN, FABRICATION AND ERECTION SHALL BE AS PER SPECIFICATION FOR STRUCTURAL STEEL BUILDINGS (AISC 360).
4. BEAM SIMPLE SHEAR CONNECTIONS SHALL BE MADE WITH 3/4"Ø BOLTS (MINIMUM), ASTM A325 TIGHTENED TO A SNUG-TIGHT CONDITION PER AISC REQUIREMENTS.
5. REACTIONS MAY NOT BE SHOWN ON FRAMING PLANS FOR CLARITY PURPOSES. THEY CAN BE PROVIDED ONCE A CONTRACT IS AWARDED ON A SEPARATE DRAWING. NOTIFY ENGINEER OF REQUEST.
6. WHERE STEEL MEMBERS ARE WELDED AND NO SIZE IS SPECIFIED, PROVIDE FULL LENGTH FILLET WELDS BOTH SIDES OF MEMBER. WELD SIZES SHALL BE AS FOLLOWS UNLESS NOTED OTHERWISE:

MEMBER THICKNESS	WELD SIZE
3/16"	3/16"
1/4"	3/16"
5/16"	3/16"
3/8"	1/4"
7/16"	1/4"
1/2"	5/16"
9/16"	3/8"
5/8"	7/16"

7. SPLICING OF STRUCTURAL STEEL MEMBERS IS PROHIBITED WITHOUT PRIOR APPROVAL OF THE ENGINEER AS TO LOCATION AND TYPE OF SPLICE TO BE MADE. ANY MEMBER HAVING A SPLICE NOT SHOWN AND DETAILED ON SHOP DRAWINGS WILL BE REJECTED.
8. ALL WELDING SHALL BE IN ACCORDANCE WITH AWS D1.1 SPECIFICATION LATEST EDITION. ALL WELDS SHALL BE MADE WITH E70XX ELECTRODES (LOW HYDROGEN ELECTRODES) AND PERFORMED BY CERTIFIED WELDERS.
9. SEE THE ARCHITECTURAL AND STRUCTURAL DRAWINGS FOR ALL ITEMS REQUIRED TO BE HOT-DIP GALVANIZED AFTER FABRICATION.
10. THE OWNER WILL ENGAGE AN INDEPENDENT TESTING AND INSPECTION AGENCY TO INSPECT HIGH-STRENGTH BOLTED AND WELDED CONNECTIONS AND TO PERFORM TESTS AND PREPARE TEST REPORTS. NOTIFY ENGINEER IF OWNER IS RELUCTANT TO PERFORM THESE DUTIES.
11. ULTRASONIC INSPECTION BY THE TESTING LABORATORY SHALL BE PROVIDED FOR ALL WELDS CALLED FOR ON THE STRUCTURAL DRAWINGS OR SHOP DRAWINGS AS FULL PENETRATION WELDS.
12. DETAILING AND FABRICATION OF STRUCTURAL STEEL SHALL BE PERFORMED BY A FABRICATOR WITH A MINIMUM OF 5 YEARS EXPERIENCE IN FABRICATION OF STRUCTURAL STEEL.
13. ERECTION OF STRUCTURAL STEEL SHALL BE BY AN ERECTOR REGULARLY ENGAGED IN THE ERECTION OF STRUCTURAL STEEL. FIELD WELDS SHALL BE PERFORMED BY INDIVIDUALS HOLDING VALID CURRENT CERTIFICATION FROM AWS FOR THE TYPE OF WELD AND MATERIAL BEING WELDED. CONTRACTOR SHALL PROVIDE, UPON EXECUTION OF THE CONTRACT AND IF REQUESTED BY THE OWNER, COPIES OF CURRENT AWS CERTIFICATIONS FOR INDIVIDUALS PERFORMING WELDS.
14. FIELD WELDING OF GALVANIZED MEMBERS IS NOT PERMITTED WITHOUT WRITTEN APPROVAL BY THE ENGINEER.
15. ALL BEAMS SHALL BE FABRICATED WITH THE NATURAL CAMBER LOCATED ABOVE THE HORIZONTAL CENTERLINE BETWEEN THE END CONNECTIONS.
16. STRUCTURAL STEEL NOTED AS BEING GALVANIZED SHALL BE HOT-DIP GALVANIZED IN ACCORDANCE WITH ASTM A123 OR ASTM A153. GALVANIZE AFTER FABRICATION WHERE PRACTICABLE. AFTER ERECTION, REPAIR ANY DAMAGE TO THE GALVANIZED COATING USING ASTM A780 ZINC RICH PAINT. DO NOT HEAT SURFACES TO WHICH REPAIR PAINT HAS BEEN APPLIED.
17. SURFACES IN CONTACT WITH OR EMBEDDED IN CONCRETE SHALL NOT BE PRIMED UNLESS NOTED OTHERWISE.
18. PREPARE STEEL SURFACES IN ACCORDANCE WITH SSPC-SP3 - POWER TOOL CLEANING.
19. AFTER ERECTION, CLEAN FIELD WELDS, BOLTED CONNECTIONS AND ABRADED AREAS WHERE SHOP COAT HAS BEEN DAMAGED. SPOT AND PRIME AREAS USING SAME MATERIAL AS SHOP COAT.
20. ALL STRUCTURAL STEEL SHALL BE PRIMED UNLESS NOTED OTHERWISE WITH A FABRICATOR'S STANDARD SHOP COAT PRIMER. A MINIMUM THICKNESS OF PRIMER OF 3 MIL DRY FILM BUT NOT MORE THAN 5 MILS. SEE PAINTING SPECIFICATIONS FOR FINAL PAINT SYSTEM.
21. SPLICES OF STRUCTURAL STEEL MEMBERS ARE PROHIBITED WITHOUT PRIOR APPROVAL OF THE ENGINEER AS TO LOCATION AND TYPE OF SPLICE TO BE MADE. ANY MEMBER HAVING A SPLICE NOT SHOWN AND DETAILED ON SHOP DRAWINGS WILL BE REJECTED.
22. STEEL LADDERS OR STAIRS NOT DETAILED ON THE STRUCTURAL DRAWINGS SHALL BE DESIGNED BY THE STEEL DETAILER AND SHALL BE A LICENSED PROFESSIONAL ENGINEER IN THE STATE OF THE PROJECT.
23. BOLTED CONNECTIONS SHALL BE IN ACCORDANCE WITH THE SPECIFICATIONS FOR STRUCTURAL JOINTS USING ASTM A325 OR A490 BOLTS, LATEST EDITION, APPROVED BY THE RESEARCH COUNCIL ON STRUCTURAL CONNECTIONS AND ENDORSED BY AISC. IF BOLTS ARE TO BE GALVANIZED, THEY SHALL HAVE A ROCKWELL HARDNESS OF C-32 OR GREATER.
24. THERE SHALL BE NO FIELD BURNING OF MISALIGNED HOLES. ANY MISALIGNMENT SHALL BE CORRECTED BY FIELD DRILLING OR REAMING ONLY, AND OVERSIZED WASHERS SHALL BE INSTALLED IF RESULTING HOLE SIZES EXCEED TOLERANCES.
25. SIZE, SPACING AND USE OF HOLES SHALL BE PER AISC J3.2 UNLESS NOTED OTHERWISE.
   A. COLUMN BASE PLATES ARE PERMITTED TO HAVE OVERSIZED HOLES AS NOTED IN AISC TABLE 14-2 WITH MINIMUM SIZED WASHERS NOTED IN TABLE. LATERAL LOAD RESISTING FRAMES SHALL HAVE WASHERS WELDED TO BASE PLATES.
   B. WHERE OVERSIZED OR SLOTTED HOLES ARE INDICATED OR PERMITTED BY THE ENGINEER SHALL HAVE PLATE WASHERS OR A CONTINUOUS BAR WITH STANDARD HOLES HAVING A SIZE SUFFICIENT TO COMPLETELY COVER THE SLOT AFTER INSTALLATION AND A MINIMUM PLATE OR WASHER THICKNESS OR 5/16 INCH.
26. ERECTION OF ALL PRIMARY AND SECONDARY STRUCTURAL STEEL MEMBERS SHALL BE IN ACCORDANCE WITH AISC REQUIREMENTS. MEMBERS SHALL BE PLUMBED AND SQUARED WITHIN TOLERANCE IN ALL DIRECTIONS BEFORE ERECTION OF ALL FRAMING MEMBERS AND COMPLETION OF CONNECTIONS. THIS CONTRACTOR SHALL INSTALL PERMANENT LATERAL BRACING MEMBERS AS THE ERECTION PROGRESSES TO MAINTAIN STABILITY, AND SHALL INSTALL TEMPORARY LATERAL BRACING AS REQUIRED.
27. NO FIELD MODIFICATIONS OF MEMBERS SHALL BE PERMITTED WITHOUT PRIOR WRITTEN APPROVAL OF THE ENGINEER. FIELD CHIPPING OR BURNING, WHEN PERMITTED BY THE ENGINEER FOR FIELD MODIFICATIONS, SHALL BE ACCOMPLISHED BY CHIPPING OR BURNING TO WITHIN 1/4 INCH OF THE CUT LINE, AND THE REMAINING MATERIAL TO BE REMOVED SHALL BE REMOVED BY GRINDING WITH AN ABRASIVE WHEEL.
28. ALL MEMBERS SHALL BE INITIALLY SECURED DURING ERECTION WITH DRIFT PINS AND/OR ERECTION BOLTS AND SHALL BE STABLE AT ALL TIMES. NO MEMBERS SHALL REMAIN UNSECURED AS ERECTION PROGRESSES.
29. ALL CONNECTION DETAILS, BRACING AND ERECTION OF STEEL SHALL COMPLY WITH MINIMUM OSHA REQUIREMENT
30. ULTRASONIC INSPECTION BY THE TESTING LABORATORY SHALL BE PROVIDED FOR ALL WELDS CALLED FOR ON THE STRUCTURAL DRAWINGS OR SHOP DRAWINGS AS PARTIAL OR FULL PENETRATION WELDS.

ALUMINUM STAIRS

1. ALUMINUM STAIRS AND LANDINGS AND ALL CONNECTIONS SHALL BE DESIGNED BY THE SUPPLIER FOR A LIVE LOAD OF 100 PSF. TREADS SHALL BE DESIGNED FOR A 300 POUND POINT LOAD DISTRIBUTED OVER 4 SQUARE INCHES. ALL HANDRAILS SHALL BE DESIGNED FOR A LATERAL LOAD OF 50 PLF APPLIED TO THE TOP OF THE RAIL OR A 200 POUND LOAD AT ANY POINT IN ANY DIRECTION, WHICHEVER GOVERNS THE DESIGN. ALL STAIR SHOP DRAWINGS SHALL BEAR THE SEAL OF A REGISTERED PROFESSIONAL ENGINEER LICENSED IN THE STATE IN WHICH THE PROJECT IS LOCATED. CALCULATIONS SHALL BE SUBMITTED UPON REQUEST.

ALUMINUM CORROSION PROTECTION WITH OTHER MATERIALS

1. ALL LOCATIONS WHERE ALUMINUM IS IN CONTACT WITH STEEL, CONCRETE OR MASONRY SHALL BE PROTECTED TO PREVENT CORROSION.
2. THE ALUMINUM MANUFACTURER SHALL DETERMINE THE BEST METHOD TO PREVENT CORROSION OF THEIR PRODUCT BUT AT A MINIMUM THE PROTECTION SHALL BE AS FOLLOWS:
   A. ALUMINUM TO STEEL - ALUMINUM SHALL BE COATED AT POINTS OF CONTACT BETWEEN THE STEEL AND ALUMINUM WITH (2) COATS OF A ZINC CHROMATE PRIMER. THE STEEL SHALL BE LIKE WISE COATED WITH (2) COATS OF PRIMER AND A FINAL COAT OF ALUMINUM PAINT.
   B. ALUMINUM TO CONCRETE OR MASONRY - ALUMINUM SHALL BE COATED AT POINTS OF CONTACT BETWEEN CONCRETE OR MASONRY AND ALUMINUM WITH (2) COATS OF ALKALI-RESISTANT BITUMINOUS PAINT.
3. ALL ANCHORS USED TO SUPPORT ALUMINUM MEMBERS SHALL BE STAINLESS STEEL.

ALUMINUM

1. ALL ALUMINUM PLATE AND SHEET SHALL BE ASTM B 209, ALLOY 6061-T6
2. ALL ALUMINUM STANDARD STRUCTURAL SHAPES, ASTM B308, ALLOY 6061-T6.
3. ALUMINUM BOLTS AND NUTS: REGULAR HEXAGON-HEAD BOLTS, ASTM F468, ALLOY 2024-T4 OR 7075-T73; WITH HEX NUTS AND, WHERE INDICATED, FLAT WASHERS.
4. STAINLESS-STEEL BOLTS AND NUTS: REGULAR HEXAGON-HEAD ANNEALED STAINLESS-STEEL BOLTS, NUTS SHALL BE 300 SERIES; ASTM F 593 FOR BOLTS AND ASTM F 594 FOR NUTS.
5. WELDING RODS AND BARE ELECTRODES: SELECT ACCORDING TO AWS SPECIFICATIONS FOR METAL ALLOY WELDED.
6. FINISH DESIGNATIONS PREFIXED BY AA COMPLY WITH THE SYSTEM ESTABLISHED BY THE ALUMINUM ASSOCIATION FOR DESIGNATING ALUMINUM FINISHES.

ABBREVIATIONS

@	AT
&	AND
Ø	DIAMETER
AB	ANCHOR BOLTS
ACI	AMERICAN CONCRETE INSTITUTE
ADDL	ADDITIONAL
AFF	ABOVE FINISHED FLOOR
AISC	AMERICAN INSTITUTE OF STEEL CONSTRUCTION
AISI	AMERICAN IRON AND STEEL INSTITUTE
ALT	ALTERNATE
ARCH	ARCHITECT'S / ARCHITECTURAL
ASTM	AMERICAN SOCIETY FOR TESTING AND MATERIALS
AWS	AMERICAN WELDING SOCIETY
B/ or BOT	BOTTOM
BCX	BOTTOM CHORD EXTENSION
BFF	BELOW FINISHED FLOOR
BLDG	BUILDING
BM	BEAM
BOS	BOTTOM OF STEEL
BRG	BEARING
BTWN	BETWEEN
CANT	CANTILEVER
CJ	CONTROL JOINT
CL	CENTERLINE
CLR	CLEAR
CMU	CONCRETE MASONRY UNIT
COL	COLUMN
CONC	CONCRETE
CONN	CONNECTION
CONST JT	CONSTRUCTION JOINT
CONT	CONTINUOUS
CONTR	CONTRACTOR
COORD	COORDINATE
CTRD	CENTERED
d	NAILS (PENNY)
DBA	DEFORMED BAR ANCHOR
DEFL	DEFLECTION
DEPR	DEPRESSION / DEPRESSED
DET	DETAIL
DIAG	DIAGONAL
DIM	DIMENSION
DIST	DISTANCE
DWG(S)	DRAWING(S)
DWL(S)	DOWEL(S)
EA	EACH
EE	EACH END
EF	EACH FACE
EJ	EXPANSION JOINT
ELEV	ELEVATION
EMBED	EMBEDDED / EMBEDMENT
ENGR	ENGINEER
EOD	EDGE OF DECK
EOS	EDGE OF SLAB
EQ	EQUAL
EQUIP	EQUIPMENT
EW	EACH WAY
EXIST	EXISTING
EXP	EXPANSION
EXT	EXTERIOR
FDN	FOUNDATION
FFE	FINISHED FLOOR ELEVATION
FOM	FACE OF MASONRY
FOW	FACE OF WALL
FS	FAR SIDE
FTG	FOOTING
GA	GAUGE
GALV	GALVANIZED
HD	HEADED
HI	HIGH
HORIZ	HORIZONTAL
HSS	HOLLOW STRUCTURAL SECTION
INT	INTERIOR
JT	JOINT
K	KIP(S)
KB	KNEE BRACE
KSI	KIPS PER SQUARE INCH
LB	LONG BAR
LBS	POUNDS
LLH	LONG LEG HORIZONTAL
LLV	LONG LEG VERTICAL
LO	LOW
LOC	LOCATION
LWC	LIGHT WEIGHT CONCRETE
MAX	MAXIMUM
MC	MOMENT CONNECTION
MECH	MECHANICAL
MFR	MANUFACTURER
MID	MIDDLE
MIN	MINIMUM
MISC	MISCELLANEOUS
MOW	MIDDLE OF WALL
MP	MASONRY PILASTER
No or #	NUMBER
NS	NEAR SIDE
NTS	NOT TO SCALE
NWC	NORMAL WEIGHT CONCRETE

ABBREVIATIONS

OC	ON CENTER
OPNG	OPENING
OPP	OPPOSITE HAND
PAF	POWDER ACTUATED FASTENER
PED	PEDESTAL
PL	PLATE
PSF	POUNDS PER SQUARE FOOT
PSI	POUNDS PER SQUARE INCH
PT	PRESSURE TREATED
P-T	POST-TENSIONED
REF	REFERENCE
REINF	REINFORCING
REQD	REQUIRED
SB	SHORT BAR
SCHD	SCHEDULE
SIM	SIMILAR
SOG	SLAB ON GRADE
SPEC(S)	SPECIFICATION(S)
SQ	SQUARE
STD	STANDARD
STIFF	STIFFENER
STIRR	STIRRUP(S)
STL	STEEL
STR	STRUCTURAL
T/	TOP
TCX	TOP CHORD EXTENSION
TOC	TOP OF CONCRETE
TOF	TOP OF FOOTING
TOS	TOP OF STEEL
TOW	TOP OF WALL
TYP	TYPICAL
UNO	UNLESS NOTED OTHERWISE
VERT	VERTICAL
VIF	VERIFY IN FIELD
W/	WITH
WWF	WELDED WIRE FABRIC
WP	WORK POINT

WK DICKSON
community infrastructure consultants
616 COLONNADE DRIVE
CHARLOTTE, NC 28205
(t)704-334-5348
(f)704-334-0078
WWW.WKDICKSON.COM
NC LICENSE NO.F-0374

NORTH CAROLINA PROFESSIONAL ENGINEER
SEAL 024096
MICHAEL A. GARDINA
01/20/2020
PROFESSIONAL SEAL

STEWART
101 N TRYON ST SUITE 1400
CHARLOTTE, NC 28202
T 704.334.7925
FIRM LICENSE #: C-1051
www.stewartinc.com
PROJECT #: R17042

REVISION RECORD

NO.	DATE	DESCRIPTION	BY
	10/09/18	Issue for Owner and NCDEQ Review	

FINAL DESIGN - NOT RELEASED FOR CONSTRUCTION

PROJECT NAME: KILLIAN CREEK WWTP PHASE 3 UPGRADE

DRAWING TITLE: GENERAL NOTES AND ABBREVIATIONS

PROJ. MGR.:	MAG
DESIGN BY:	BK
DRAWN BY:	DJB
PROJ. DATE:	OCT. 09, 2018

DRAWING NUMBER: S.0.3

WKD PROJ. NO.: 20170294.00.CL

FILE PATH:L:\Projects\LINCL\20170294\00CL - Killian Creek WWTP Ph 3 Upgrade Const\CADD\Plan Set\TBD-20170294_G_SHT_Headworks-hqah45kh.dwgL:\Projects\LINCL\20170294\00CL - Killian Creek WWTP Ph 3 Upgrade Const\CADD\Plan Set\TBD-20170294_G_SHT_Headworks-hqah45kh.dwg, NSONGCO, 3/14/2018 10:02:29 AM

COPYRIGHT ©, W.K. DICKSON & CO., INC. ALL RIGHTS RESERVED. REPRODUCTION OR USE OF THE CONTENTS OF THIS DOCUMENT, ADDITIONS OR DELETIONS TO THIS DOCUMENT, IN WHOLE OR IN PART, WITHOUT WRITTEN CONSENT OF W.K. DICKSON & CO., INC., IS PROHIBITED. ONLY COPIES FROM THE ORIGINAL OF THIS DOCUMENT, MARKED WITH AN ORIGINAL SIGNATURE AND SEAL SHALL BE CONSIDERED TO BE VALID, TRUE COPIES.

STATEMENT OF SPECIAL INSPECTIONS

PROJECT:	KILLIAN CREEK WWTP PHASE 3 UPGRADE
LOCATION:	LINCOLN COUNTY, NC
OWNER'S REPRESENTATIVE:	
OWNER'S ADDRESS:	
ARCHITECT OF RECORD:	JOHN WALKER, CBSA
STRUCTURAL ENGINEER OF RECORD:	MICHAEL GARDINA, PE, STEWART

THIS STATEMENT OF SPECIAL INSPECTIONS IS SUBMITTED AS A CONDITION FOR PERMIT ISSUANCE IN ACCORDANCE WITH THE SPECIAL INSPECTION REQUIREMENTS (CHAPTER 17) OF THE NORTH CAROLINA STATE BUILDING CODE. THE STATEMENT INCLUDES A SCHEDULE OF SPECIAL INSPECTIONS APPLICABLE TO THIS PROJECT AS WELL AS THE REQUIRED QUALIFICATIONS FOR THE SPECIAL INSPECTOR AND AGENTS OF THE SPECIAL INSPECTOR TO PERFORM ON THIS PROJECT.

THE SPECIAL INSPECTOR SHALL KEEP RECORDS OF ALL INSPECTIONS, FURNISH INSPECTION REPORTS, AND IDENTIFY DISCREPANCIES AS DETAILED BY PROJECT SPECIFICATIONS SECTION 014100 - "SPECIAL INSPECTIONS". A FINAL REPORT OF SPECIAL INSPECTIONS, DOCUMENTING THE COMPLETION OF ALL REQUIRED SPECIAL INSPECTIONS AND CONFIRMING THE CORRECTION OF ANY DISCREPANCIES, WILL BE SUBMITTED PRIOR TO ISSUANCE OF A CERTIFICATE OF USE AND OCCUPANCY.

THE SPECIAL INSPECTIONS PROGRAM DOES NOT RELIEVE THE CONTRACTOR OF HIS OR HER RESPONSIBILITIES. JOB SITE SAFETY AND MEANS AND METHODS OF CONSTRUCTION ARE SOLELY THE RESPONSIBILITY OF THE CONTRACTOR.

THE FOLLOWING TABLES COMPRISE THE REQUIRED SCHEDULE OF SPECIAL INSPECTIONS FOR THIS PROJECT. THE CONSTRUCTION DIVISIONS WHICH REQUIRE SPECIAL INSPECTIONS FOR THIS PROJECT ARE AS FOLLOWS:

	SOILS	STRUCTURAL MASONRY (LEVEL 1)
	CAST-IN-PLACE CONCRETE	STRUCTURAL STEEL
	STRUCTURAL LOAD BEARING PRECAST CONCRETE	SPRAYED FIRE RESISTANT MATERIALS AND COATINGS
SEISMIC DESIGN CATEGORY:	C	
BASIC WIND SPEED:	120 MPH	
WIND EXPOSURE CATEGORY:	C	

STATEMENT OF SPECIAL INSPECTIONS PREPARED BY MICHAEL GARDINA, PE (STRUCTURAL ENGINEER OF RECORD). THE SEAL AND SIGNATURE ON THIS DRAWING SHALL BE CONFIRMATION OF THE STATEMENT HEREIN.

QUALIFICATIONS OF INSPECTORS AND AGENTS OF SPECIAL INSPECTORS

THE QUALIFICATIONS OF ALL PERSONNEL PERFORMING SPECIAL INSPECTION ACTIVITIES ARE SUBJECT TO THE APPROVAL OF THE BUILDING OFFICIAL. THE CREDENTIALS OF ALL INSPECTORS SHALL BE PROVIDED IF REQUESTED. WHEN THE STRUCTURAL ENGINEER OF RECORD DEEMS IT APPROPRIATE THAT THE INDIVIDUAL PERFORMING A STIPULATED TEST OR INSPECTION HAVE A SPECIFIC CERTIFICATION OR LICENSE AS INDICATED BELOW, SUCH DESIGNATION WILL APPEAR ON THE SCHEDULE OF SPECIAL INSPECTIONS. THE SPECIAL INSPECTOR (SI) SHALL BE A LICENSED PROFESSIONAL ENGINEER WITH A MINIMUM OF 3 YEARS OF EXPERIENCE AS A SPECIAL INSPECTOR.

SE	STRUCTURAL ENGINEER: A LICENSED PE OR SE SPECIALIZING IN THE DESIGN OF BUILDING STRUCTURES.
GE	GEOTECHNICAL ENGINEER: A LICENSED PE SPECIALIZING IN SOIL MECHANICS AND FOUNDATIONS.
S-EI	STRUCTURAL ENGINEERING INTERN: A GRADUATE ENGINEER WHO HAS PASSED THE FUNDAMENTALS OF ENGINEERING EXAMINATION, WITH EXPERIENCE IN THE DESIGN OF BUILDING STRUCTURES AND WORKING UNDER THE SUPERVISION OF A LICENSED STRUCTURAL PE OR SE.
G-EI	GEOTECHNICAL ENGINEERING INTERN: A GRADUATE ENGINEER WHO HAS PASSED THE FUNDAMENTALS OF ENGINEERING EXAMINATION, WITH EXPERIENCE IN SOIL MECHANICS AND FOUNDATIONS AND WORKING UNDER THE SUPERVISION OF A LICENSED GEOTECHNICAL PE OR SE.
G-TECH 1	GEOTECHNICAL TECHNICIAN 1: AN EXPERIENCED TECHNICIAN WITH NATIONAL INSTITUTE FOR CERTIFICATION IN ENGINEERING TECHNOLOGIES: LEVEL 2 – SOILS CERTIFICATION.
G-TECH 2	GEOTECHNICAL TECHNICIAN 2: AN EXPERIENCED TECHNICIAN WITH NATIONAL INSTITUTE FOR CERTIFICATION IN ENGINEERING TECHNOLOGIES: LEVEL 2 – GEOTECHNICAL ENGINEERING CERTIFICATION.
C-TECH 1	CONCRETE TECHNICIAN 1: AN EXPERIENCED TECHNICIAN WITH AMERICAN CONCRETE INSTITUTE – GRADE I CONCRETE FIELD TESTING TECHNICIAN OR GRADE I CONCRETE LABORATORY TESTING TECHNICIAN CERTIFICATION.
C-TECH 2	CONCRETE TECHNICIAN 2: AN EXPERIENCED TECHNICIAN WITH AMERICAN CONCRETE INSTITUTE – GRADE II CONCRETE LABORATORY TESTING TECHNICIAN OR ICBO REINFORCED CONCRETE SPECIAL INSPECTOR CERTIFICATION.
S-TECH 1	STEEL TECHNICIAN 1: AN EXPERIENCED AMERICAN WELDING SOCIETY – CERTIFIED ASSOCIATE WELDING INSPECTOR (CAWI) OR NON-DESTRUCTIVE TESTING TECHNICIAN ASNT-TC-1A LEVEL I.
S-TECH 2	STEEL TECHNICIAN 2: AN EXPERIENCED AMERICAN WELDING SOCIETY – CERTIFIED WELDING INSPECTOR (CWI) OR NON-DESTRUCTIVE TESTING TECHNICIAN ASNT-TC-1A LEVEL II OR ICBO CERTIFIED STRUCTURAL STEEL AND BOLTING SPECIAL INSPECTOR.
S-TECH 3	STEEL TECHNICIAN 3: AN TECHNICIAN WHO IS AN AMERICAN WELDING SOCIETY – CERTIFIED WELDING INSPECTOR (CWI) WITH A MINIMUM OF 10 YEARS OF WELD INSPECTION EXPERIENCE OR A NON-DESTRUCTIVE TESTING TECHNICIAN AST-TC-1A LEVEL III OR ICBO CERTIFIED STRUCTURAL WELDING SPECIAL INSPECTOR.
SMSI	STRUCTURAL MASONRY SPECIAL INSPECTOR: AN EXPERIENCED MASONRY INSPECTOR WHO IS AN ICBO CERTIFIED STRUCTURAL MASONRY SPECIAL INSPECTOR.
SFSI	ICBO CERTIFIED SPRAY-APPLIED FIREPROOFING SPECIAL INSPECTOR.
PCSI	ICBO CERTIFIED PRESTRESSED CONCRETE SPECIAL INSPECTOR.
PTI	CONCRETE TECHNICIAN WITH POST TENSIONING INSTITUTE – LEVEL 2 CERTIFICATION.
SCSI	INSPECTION/TESTING COMPANY WITH FIRE PROTECTION ENGINEERING EXPERIENCE, MECHANICAL ENGINEERING EXPERIENCE, AND CERTIFICATION AS AIR BALANCERS.

SCHEDULE OF SPECIAL INSPECTIONS - SOILS

ITEM	QUALIFICATIONS	SCOPE
SITE PREPARATION	SI, SE, GE, S-EI, G-EI, G-TECH 1	COLLECT TESTING AGENCY'S FIELD AND LABORATORY TEST REPORTS DURING SITE PREPARATION AND VERIFY THE FOLLOWING COMPLIES WITH THE PROJECT SPECIFICATIONS/GEOTECHNICAL REPORT: - SITE STRIPPING AND SUBGRADE PREPARATION. - FILL MATERIAL (ON-SITE AND/OR IMPORTED) CLASSIFICATION. - FILL MATERIAL PLACEMENT (LIFT THICKNESS, MOISTURE CONTENT AND COMPACTION). - ALLOWABLE BEARING CAPACITY FOR FOOTINGS AND FOUNDATIONS.
		PERIODIC INSPECTION OF TESTING OF FILL MATERIAL PLACEMENT INCLUDING PERIODIC OBSERVATION OF TESTING AGENCY'S DENSITY TESTING METHODS AND FREQUENCY OF TESTING TO VERIFY COMPLIANCE WITH PROJECT SPECIFICATIONS/GEOTECHNICAL REPORT.
		CONTINUOUS INSPECTION OF DENSITY AND LIFT THICKNESSES DURING PLACEMENT AND COMPACTION OF CONTROLLED FILLS WITHIN THE BUILDING FOOTPRINT.
		CONTINUOUS VERIFICATION FOR THE USE OF PROPER MATERIALS DURING PLACEMENT AND COMPACTION OF CONTROLLED FILLS WITHIN THE BUILDING FOOTPRINT.
REINFORCED STRUCTURAL FILL	SI, SE, GE, S-EI, G-EI, G-TECH 1	COLLECT TESTING AGENCY'S FIELD AND LABORATORY TEST REPORTS DURING SITE PREPARATION AND VERIFY THE FOLLOWING COMPLIES WITH THE PROJECT SPECIFICATIONS/GEOTECHNICAL REPORT: - SITE STRIPPING AND SUBGRADE PREPARATION. - FILL MATERIAL (ON-SITE AND/OR IMPORTED) CLASSIFICATION. - FILL MATERIAL PLACEMENT (LIFT THICKNESS, MOISTURE CONTENT AND COMPACTION). - ALLOWABLE BEARING CAPACITY FOR FOOTINGS AND FOUNDATIONS.
		PERIODIC INSPECTION OF TESTING OF FILL MATERIAL PLACEMENT INCLUDING PERIODIC OBSERVATION OF TESTING AGENCY'S DENSITY TESTING METHODS AND FREQUENCY OF TESTING TO VERIFY COMPLIANCE WITH PROJECT SPECIFICATIONS/GEOTECHNICAL REPORT.
		CONTINUOUS INSPECTION OF DENSITY AND LIFT THICKNESSES DURING PLACEMENT AND COMPACTION OF CONTROLLED FILLS WITHIN THE BUILDING FOOTPRINT.
		CONTINUOUS VERIFICATION FOR THE USE OF PROPER MATERIALS, INCLUDING GEOTEXTILE GEOGRID, DURING PLACEMENT AND COMPACTION OF CONTROLLED FILLS WITHIN THE BUILDING FOOTPRINT.

SPECIAL INSPECTION OF SOILS IS ONLY REQUIRED FOR SUBGRADE AND FILL PLACEMENT UNDER STRUCTURES REQUIRING SPECIAL INSPECTIONS.

SCHEDULE OF SPECIAL INSPECTIONS - CAST-IN-PLACE CONCRETE

ITEM	QUALIFICATIONS	SCOPE
MIX DESIGN VERIFICATION	SI, SE, S-EI, C-TECH 1, C-TECH 2	COLLECT ACCEPTED MIX DESIGNS AND VERIFY APPROPRIATE MIX IS USED DURING SPECIFIC INSTALLATION.
REINFORCEMENT INSTALLATION	SI, SE, S-EI, C-TECH 2	PERIODIC INSPECTION OF REINFORCING STEEL, WELDED WIRE FABRIC, EMBED PLATES AND ANCHORS TO CONFIRM SIZE, SPACING AND DETAILS CONFORM TO CONTRACT DOCUMENTS: - FOOTINGS AND FOUNDATIONS - PILE CAPS AND GRADE BEAMS - FOUNDATION WALLS, BASEMENT WALLS, AND PEDESTALS - SLABS ON METAL DECK - COLUMNS AND SHEAR WALLS - ELEVATED SLABS, JOISTS, AND BEAMS - CONTINUOUS INSPECTION OF ALL APPROVED WELDING OF REINFORCING STEEL
FORMWORK	SI, SE, S-EI, C-TECH 2	PERIODIC INSPECTION OF FORMWORK FOR SHAPE, LOCATION, AND DIMENSIONS OF THE CONCRETE MEMBER BEING FORMED.
CONCRETE PLACEMENT, MONITORING FRESH CONCRETE, SAMPLING AND PREPARATION OF TEST SAMPLES	SI, SE, S-EI, C-TECH 2	CONTINUOUS INSPECTION OF CAST-IN-PLACE CONCRETE PLACEMENT.
		CONTINUOUS MONITORING OF SAMPLING OF FRESH CONCRETE, SLUMP TEST, AIR CONTENT TEST, TEMPERATURE OF CONCRETE AND CREATION OF STRENGTH TEST SPECIMENS.
CURING AND PROTECTION	SI, SE, S-EI, C-TECH 2	PERIODIC INSPECTIONS OF CURING TECHNIQUES.
		PERIODIC INSPECTIONS OF COLD AND HOT WEATHER CONCRETING TECHNIQUES.
CONCRETE STRENGTH VERIFICATION	SI, SE, S-EI, C-TECH 2	VERIFY WITH TESTING AGENCY REPORTS IN-SITU CONCRETE STRENGTH OF ELEVATED BEAMS AND SLABS PRIOR TO REMOVAL OF SHORES AND FORMS.
POST-INSTALLED ADHESIVE AND MECHANICAL ANCHORS	SI, SE, S-EI, C-TECH 2	VERIFY CONTRACTOR PERFORMING WORK IS TRAINED AND CERTIFIED FOR INSTALLATION.
		CONTINUOUS MONITORING OF ADHESIVE ANCHORS DURING INSTALLATION PROCEDURE TO VERIFY IN ACCORDANCE WITH MANUFACTURER'S SPECIFICATION AND INSTALLATION INSTRUCTIONS FOR SPECIFIC PRODUCT.
		PERIODIC INSPECTION OF MECHANICAL ANCHORS.

SCHEDULE OF SPECIAL INSPECTIONS - STRUCTURAL LOAD BEARING PRECAST CONCRETE

ITEM	QUALIFICATIONS	SCOPE
FABRICATOR CERTIFICATION, QUALITY CONTROL PROCEDURES	SI, SE, S-EI, S-TECH 1, S-TECH 2, S-TECH 3	ENSURE FABRICATOR IS PCI CERTIFIED PER CONTRACT DOCUMENTS TO SATISFY REQUIREMENTS OF NCSBC 1704.2.
		COLLECT CERTIFICATE OF COMPLIANCE FROM FABRICATOR AT COMPLETION OF FABRICATION.
WELDING	SI, SE, S-EI, S-TECH 1, S-TECH 2, S-TECH 3	COLLECT CERTIFICATE OF COMPLIANCE FOR WELD FILLER MATERIAL AND CONFIRM COMPLIANCE WITH CONTRACT DOCUMENTS.
		CONFIRM WELD FILLER MATERIAL IDENTIFICATION MARKINGS CONFORM TO AWS SPECIFICATION IN THE CONTRACT DOCUMENTS.
		CONTINUOUS VISUAL INSPECTION OF ALL MULTIPLE PASS FILLET WELDS.
		CONTINUOUS VISUAL INSPECTION OF ALL SINGLE-PASS FILLET WELDS GREATER THAN 5/16".
		PERIODIC VISUAL INSPECTION OF FILLET WELDS 5/16" OR SMALLER.
		PERIODIC VISUAL INSPECTION OF WELDED REINFORCING STEEL.
STRUCTURAL DETAILS	SI, SE, S-EI, S-TECH 1, S-TECH 2, S-TECH 3	PERIODIC INSPECTION OF PRECAST INSTALLATION AND FRAMING JOINT DETAILS TO CONFIRM MEMBER SIZES AND CONNECTION DETAILS PER THE FOLLOWING:
BOLTING	SI, SE, S-EI, S-TECH 1, S-TECH 2, S-TECH 3	COLLECT MATERIAL DATA SHEETS FOR A325 AND A490 BOLTS, NUTS, AND WASHERS, AND CONFIRM COMPLIANCE WITH CONTRACT DOCUMENTS.
		COLLECT CERTIFICATE OF COMPLIANCE FROM BOLT SUPPLIER AT COMPLETION OF FABRICATION.
		PERIODIC INSPECTION OF BOLTED CONNECTIONS TO CONFIRM BOLT MARKINGS CONFORM TO ASTM STANDARDS.
		PERIODIC INSPECTION OF A325/A490 BOLTED (BEARING TYPE) CONNECTIONS.
		CONTINUOUS INSPECTION OF INSTALLATION OF A325/A490 BOLTED (SLIP CRITICAL) CONNECTIONS.
		CONTINUOUS INSPECTION OF ALL PRE-TENSIONED BOLTS TO CONFIRM TENSIONING CONFORMS TO CONTRACT DOCUMENTS.

SCHEDULE OF SPECIAL INSPECTIONS - STRUCTURAL MASONRY (LEVEL 1)

ITEM	QUALIFICATIONS	SCOPE
MATERIAL CERTIFICATION	SI, SE, S-EI, SMSI	VERIFY THAT PROPORTIONS OF SITE PREPARED MORTAR CONFORM TO CONTRACT DOCUMENTS.
		COLLECT MIX DESIGN FOR GROUT AND VERIFY IT CONFORMS TO CONTRACT DOCUMENTS.
INSTALLATION OF MASONRY	SI, SE, S-EI, SMSI	PERIODIC INSPECTION OF CONSTRUCTION OF MORTAR JOINTS, AS CONSTRUCTION BEGINS AND DURING CONSTRUCTION.
		PERIODIC VERIFICATION OF SIZE AND LOCATION OF STRUCTURAL ELEMENTS TO CONFORM TO CONTRACT DOCUMENTS.
WELDING OF REINFORCING STEEL	S-TECH 1, S-TECH 2, S-TECH 3	CONTINUOUS INSPECTION OF ALL APPROVED WELDING OF REINFORCING STEEL.
REINFORCEMENT INSTALLATION	SI, SE, S-EI, SMSI	PERIODIC VERIFICATION OF LOCATION OF REINFORCEMENT AND CONNECTIONS TO STRUCTURE PRIOR TO CONSTRUCTION.
		PERIODIC VERIFICATION, PRIOR TO GROUTING, OF SIZE, GRADE, PLACEMENT, AND LAP LENGTHS OF REINFORCEMENT AND CONNECTION OF MASONRY TO STRUCTURAL FRAME.
GROUTING OPERATIONS	SI, SE, S-EI, SMSI	CONTINUOUS OBSERVATION OF THE PLACEMENT OF ALL GROUT, CONFIRMING GROUT SPACE IS CLEAN AND PLACEMENT OF THE REINFORCING AND CONNECTORS ARE IN CONFORMANCE WITH CONTRACT DOCUMENTS.
WEATHER PROTECTION	SI, SE, S-EI, SMSI	VERIFY PROTECTION TECHNIQUES FOR CONSTRUCTION OF MASONRY BELOW 40ºF AND ABOVE 90ºF (COLD AND HOT WEATHER CONCRETING).
OBSERVATIONS OF THE EVALUATION OF MASONRY STRENGTH	SI, SE, S-EI, SMSI	CONTINUOUS OBSERVATION OF THE PREPARATION OF GROUT SPECIMENS, MORTAR SPECIMENS AND OR PRISMS.
POST-INSTALLED ADHESIVE AND MECHANICAL ANCHORS	SI, SE, S-EI	VERIFY CONTRACTOR PERFORMING WORK IS TRAINED AND CERTIFIED FOR INSTALLATION.
		CONTINUOUS MONITORING DURING INSTALLATION PROCEDURE TO VERIFY IN ACCORDANCE WITH MANUFACTURER'S SPECIFICATION AND INSTALLATION INSTRUCTIONS FOR SPECIFIC PRODUCT.

SCHEDULE OF SPECIAL INSPECTIONS - STRUCTURAL STEEL

ITEM	QUALIFICATIONS	SCOPE
FABRICATOR CERTIFICATION, QUALITY CONTROL PROCEDURES	SI, SE, S-EI, S-TECH 1, S-TECH 2, S-TECH 3	ENSURE FABRICATOR IS AISC CERTIFIED PER CONTRACT DOCUMENTS TO SATISFY REQUIREMENTS OF NCSBC 1704.2.2 OR SI SHALL VERIFY FABRICATOR MEETS REQUIREMENTS OF NCSBC 1704.2.1.
		COLLECT CERTIFICATE OF COMPLIANCE FROM FABRICATOR AT COMPLETION OF FABRICATION.
WELDING	SI, SE, S-EI, S-TECH 1, S-TECH 2, S-TECH 3	COLLECT CERTIFICATE OF COMPLIANCE FOR WELD FILLER MATERIAL AND CONFIRM COMPLIANCE WITH CONTRACT DOCUMENTS.
		CONFIRM WELD FILLER MATERIAL IDENTIFICATION MARKINGS CONFORM TO AWS SPECIFICATION IN THE CONTRACT DOCUMENTS.
		CONTINUOUS VISUAL INSPECTION OF ALL COMPLETE AND PARTIAL PENETRATION WELDS.
		CONTINUOUS VISUAL INSPECTION OF ALL MULTIPLE PASS FILLET WELDS.
		CONTINUOUS VISUAL INSPECTION OF ALL SINGLE PASS FILLET WELDS GREATER THAN 5/16".
		PERIODIC VISUAL INSPECTION OF FILLET WELDS 5/16" OR SMALLER.
		PERIODIC VISUAL INSPECTION OF ROOF AND FLOOR DECK WELDS.
		PERIODIC VISUAL INSPECTION OF WELDED REINFORCING STEEL.
		CONTINUOUS INSPECTION OF ALL APPROVED WELDING OF REINFORCING STEEL.
STRUCTURAL DETAILS	SI, SE, S-EI, S-TECH 1, S-TECH 2, S-TECH 3	PERIODIC INSPECTION OF STEEL FRAMING JOINT DETAILS TO CONFIRM MEMBER SIZES AND CONNECTION DETAILS.
BOLTING	SI, SE, S-EI, S-TECH 1, S-TECH 2, S-TECH 3	COLLECT MATERIAL DATA SHEETS FOR A325 AND A490 BOLTS, NUTS, AND WASHERS, AND CONFIRM COMPLIANCE WITH CONTRACT DOCUMENTS.
		COLLECT CERTIFICATE OF COMPLIANCE FROM BOLT SUPPLIER AT COMPLETION OF FABRICATION.
		PERIODIC INSPECTION OF BOLTED CONNECTIONS TO CONFIRM BOLT MARKINGS CONFORM TO ASTM STANDARDS.
		PERIODIC INSPECTION OF A325/A490 BOLTED (BEARING TYPE) CONNECTIONS.
		PERIODIC INSPECTION OF INSTALLATION OF A325/A490 BOLTED (SLIP CRITICAL) CONNECTIONS WITH INDICATORS (TC BOLTS).
		CONTINUOUS INSPECTION OF INSTALLATION OF A325/A490 BOLTED (SLIP CRITICAL) CONNECTIONS.
		PERIODIC INSPECTION OF ALL PRE-TENSIONED BOLTS TO CONFIRM TENSIONING CONFORMS TO CONTRACT DOCUMENTS.
MATERIAL CERTIFICATION	SI, SE, S-EI, S-TECH 1, S-TECH 2, S-TECH 3	COLLECT CERTIFIED MILL TEST REPORTS FOR ALL TYPES OF STRUCTURAL STEEL SPECIFIED IN THE CONTRACT DOCUMENTS AND CONFIRM COMPLIANCE WITH CONTRACT DOCUMENTS.
COMPOSITE SHEAR STUD CONNECTORS	SI, SE, S-EI, S-TECH 1, S-TECH 2, S-TECH 3	PERIODIC VISUAL INSPECTION OF SHEAR STUD WELDS TO CONFIRM 360° FLASH.
		PERIODIC INSPECTION OF SHEAR STUD WELDS BY 15° BEND TEST.
		PERIODIC INSPECTION OF COMPOSITE BEAMS TO CONFIRM NUMBER OF SHEAR STUDS INSTALLED CONFORMS TO CONTRACT DOCUMENTS.

SCHEDULE OF SPECIAL INSPECTIONS - SPRAYED FIRE RESISTANT MATERIALS AND COATINGS

ITEM	QUALIFICATIONS	SCOPE
SPRAYED FIRE RESISTANT MATERIALS	SI, SFSI, SCSI	PERIODIC TESTING AND INSPECTION OF FIREPROOFING SYSTEM IN ACCORDANCE WITH SECTION 1704.10 OF THE CODE, WHICH INCLUDES BUT IS NOT LIMITED TO: - INSPECT PREPARATION OF SUBSTRATE PRIOR TO INSTALLATION IN ACCORDANCE WITH APPROVED FIRE RESISTANCE DESIGN AND APPROVED MANUFACTURER'S WRITTEN INSTRUCTIONS. - INSPECT THAT SUBSTRATE HAS MINIMUM AMBIENT TEMPERATURE BEFORE AND AFTER APPLICATION AS SPECIFIED BY THE FIRE RESISTANCE DESIGN AND APPROVED MANUFACTURER'S WRITTEN INSTRUCTIONS. - TEST THICKNESS OF SPRAYED ON MATERIAL PER FIRE RESISTANCE DESIGN AND APPROVED MANUFACTURER'S WRITTEN INSTRUCTIONS PER ASTM E605. - TEST DENSITY OF SPRAYED ON MATERIAL PER FIRE RESISTANCE DESIGN AND APPROVED MANUFACTURER'S WRITTEN INSTRUCTIONS. - TEST BOND STRENGTH TO ENSURE A VALUE GREATER THAN 150 POUNDS PER SQUARE FOOT.
MASTIC AND INTUMESCENT FIRE RESISTANT COATINGS	SI, SFSI, SCSI	PERIODIC INSPECTION OF FIREPROOFING SYSTEM IN ACCORDANCE WITH NCSBC SECTION 1704.11 AND AWCI 12-B. - INSPECT FIRE RESISTANT COATINGS AS DESIGNATED IN THE APPROVED CONSTRUCTION DOCUMENTS. - INSPECT SUBSTRATES.

FINAL DESIGN - NOT RELEASED FOR CONSTRUCTION

WK DICKSON
community infrastructure consultants
616 COLONNADE DRIVE
CHARLOTTE, NC 28205
(t)704-334-5348
(f)704-334-0078
WWW.WKDICKSON.COM
NC LICENSE NO.F-0374

NORTH CAROLINA PROFESSIONAL ENGINEER SEAL 024096 MICHAEL A. GARDINA
01/20/2020
PROFESSIONAL SEAL

STEWART
101 N TRYON ST SUITE 1400
CHARLOTTE, NC 28202
T 704.334.7925
FIRM LICENSE #: C-1051
www.stewartinc.com
PROJECT #: R17042

REVISION RECORD

NO.	DATE	DESCRIPTION	BY
	10/09/18	Issue for Owner and NCDEQ Review	

PROJECT NAME: KILLIAN CREEK WWTP PHASE 3 UPGRADE

DRAWING TITLE: STATEMENT OF SPECIAL INSPECTIONS

PROJ. MGR.:	MAG
DESIGN BY:	BK
DRAWN BY:	DJB
PROJ. DATE:	OCT. 09, 2018

DRAWING NUMBER: S.0.4

WKD PROJ. NO.: 20170294.00.CL

FILE PATH:L:\Projects\LINCL\2017029400CL - Killian Creek WWTP Ph 3 Upgrade Const\CADD\Plan Set\TBD-20170294_G_SHT_Headworks-hqah45kh.dwgL:\Projects\LINCL\2017029400CL - Killian Creek WWTP Ph 3 Upgrade Const\CADD\Plan Set\TBD-20170294_G_SHT_Headworks-hqah45kh.dwg, NSONGCO, 3/14/2018 10:02:29 AM

COPYRIGHT: W.K. DICKSON & CO., INC. ALL RIGHTS RESERVED. REPRODUCTION OR USE OF THE CONTENTS OF THIS DOCUMENT, ADDITIONS OR REDITIONS TO THIS DOCUMENT, IN ANY FORM OR BY ANY MEANS WHATSOEVER, WITHOUT THE EXPRESS WRITTEN PERMISSION OF W.K. DICKSON & CO., INC., IS PROHIBITED. NONE COPIES, EXCEPTIONS OR DERIVATIVES OF THIS DOCUMENT, IN ANY FORM OR FORMAT, INCLUDING BY WAY OF ELECTRONIC MEDIA, MAY BE MADE.

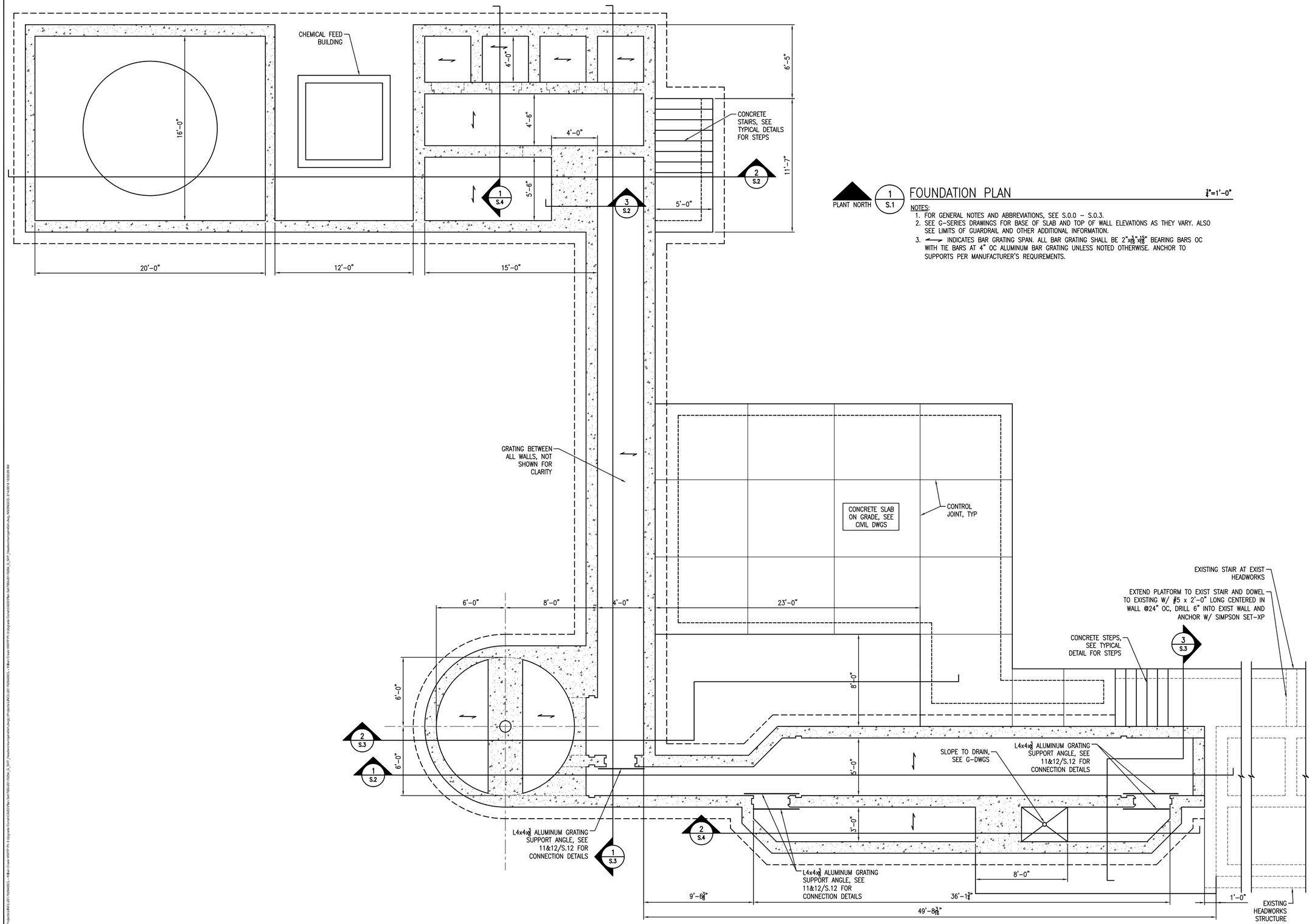

PLANT NORTH

1 S.1

FOUNDATION PLAN

1/4"=1'-0"

NOTES:

1. FOR GENERAL NOTES AND ABBREVIATIONS, SEE S.0.0 – S.0.3.
2. SEE G-SERIES DRAWINGS FOR BASE OF SLAB AND TOP OF WALL ELEVATIONS AS THEY VARY. ALSO SEE LIMITS OF GUARDRAIL AND OTHER ADDITIONAL INFORMATION.
3. ←→ INDICATES BAR GRATING SPAN. ALL BAR GRATING SHALL BE 2"x3/16"x1 5/16" BEARING BARS OC WITH TIE BARS AT 4" OC ALUMINUM BAR GRATING UNLESS NOTED OTHERWISE. ANCHOR TO SUPPORTS PER MANUFACTURER'S REQUIREMENTS.

FINAL DESIGN - NOT RELEASED FOR CONSTRUCTION

WK DICKSON
community infrastructure consultants
616 COLONNADE DRIVE
CHARLOTTE, NC 28205
(t)704-334-5348
(f)704-334-0078
WWW.WKDICKSON.COM
NC LICENSE NO.F-0374

NORTH CAROLINA PROFESSIONAL SEAL 024096 ENGINEER MICHAEL A. GARDINER
01/20/2020
PROFESSIONAL SEAL

STEWART
101 N TRYON ST SUITE 1400
CHARLOTTE, NC 28202
T 704.334.7925
FIRM LICENSE #: C-1051
www.stewartinc.com
PROJECT #: R17042

REVISION RECORD

NO.	DATE	DESCRIPTION	BY
	10/09/18	Issue for Owner and NCDEQ Review	

PROJECT NAME: KILLIAN CREEK WWTP PHASE 3 UPGRADE

DRAWING TITLE: HEADWORKS FOUNDATION PLAN

PROJ. MGR.:	MAG
DESIGN BY:	BK
DRAWN BY:	DJB
PROJ. DATE:	OCT. 09, 2018

DRAWING NUMBER: S.1

WKD PROJ. NO.: 20170294.00.CL

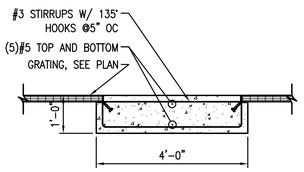

3 S.2 SECTION INFLUENT SAMPLER ½"=1'-0"

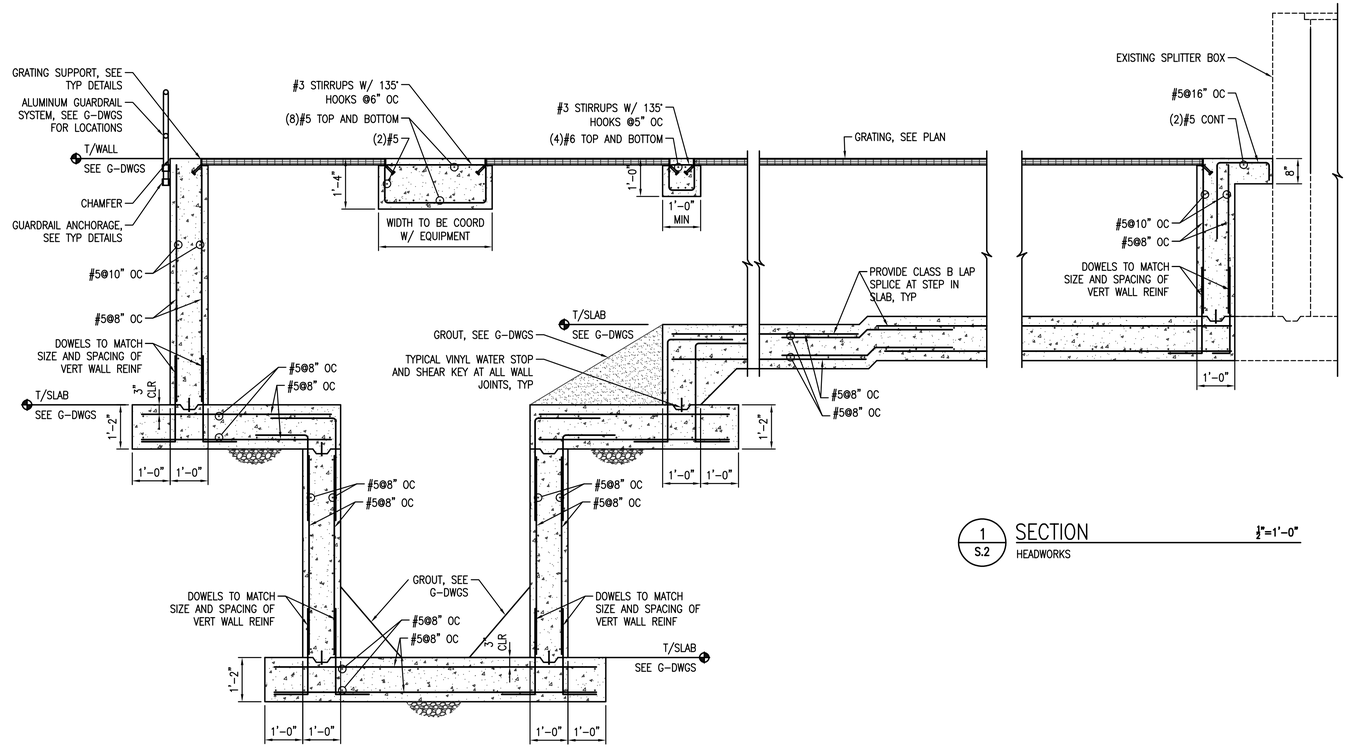

1 S.2 SECTION HEADWORKS ½"=1'-0"

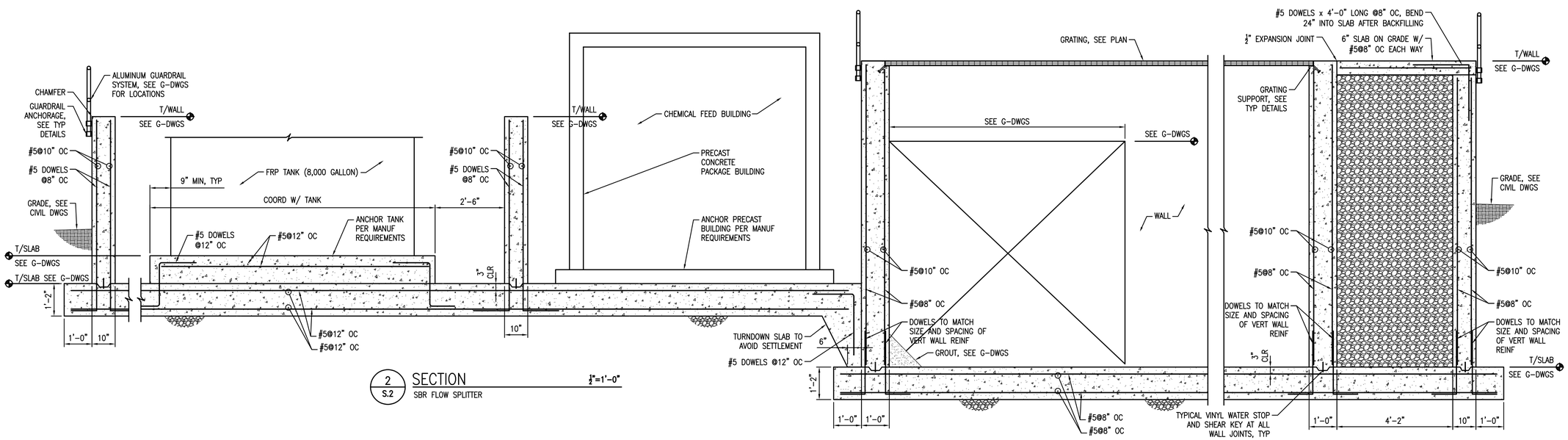

2 S.2 SECTION SBR FLOW SPLITTER ½"=1'-0"

FINAL DESIGN - NOT RELEASED FOR CONSTRUCTION

WK DICKSON
community infrastructure consultants
616 COLONNADE DRIVE
CHARLOTTE, NC 28205
(t)704-334-5348
(f)704-334-0078
WWW.WKDICKSON.COM
NC LICENSE NO.F-0374

NORTH CAROLINA PROFESSIONAL SEAL 024096 ENGINEER MICHAEL A. GARDINER 01/20/2020
PROFESSIONAL SEAL

STEWART
101 N TRYON ST SUITE 1400
CHARLOTTE, NC 28202
T 704.334.7925
FIRM LICENSE #: C-1051
www.stewartinc.com
PROJECT #: 817042

REVISION RECORD

NO.	DATE	DESCRIPTION	BY
	10/09/18	Issue for Owner and NCDEQ Review	

PROJECT NAME: KILLIAN CREEK WWTP PHASE 3 UPGRADE

DRAWING TITLE: HEADWORKS SECTIONS

PROJ. MGR.:	MAG
DESIGN BY:	BK
DRAWN BY:	DJB
PROJ. DATE:	OCT. 09, 2018

DRAWING NUMBER: S.2

WKD PROJ. NO.: 20170294.00.CL

COPYRIGHT © WK DICKSON & CO, INC. ALL RIGHTS RESERVED. REPRODUCTION OR USE OF THE CONTENTS OF THIS DOCUMENT, ADDITIONS OR ALTERATIONS TO THIS DOCUMENT, OR DISCLOSURE OF THIS DOCUMENT TO ANY PARTY WITHOUT WRITTEN CONSENT OF WK DICKSON & CO, INC. IS PROHIBITED. TRUE COPIES OF THIS DOCUMENT MAY BE MADE BY LICENSED PARTIES ONLY WITH COPYRIGHT INCLUDED AND NO ALTERATIONS TO BE MADE. TRUE COPIES MUST BE MADE FROM THE ORIGINAL DOCUMENT.

FILE PATH:C:\Projects\JMC\20170294\00.CL - Killian Creek WWTP Ph 3 Upgrade Const\CADD\Plan Set\TBCA\817042_D_SR1_Headworksupgrade.dwg, Plotted by: Michael Gardiner, 1/14/2019 10:05:29 AM

COPYRIGHT © W.K. DICKSON & CO., INC. ALL RIGHTS RESERVED. REPRODUCTION OR USE OF THE CONTENTS OF THIS DOCUMENT, ADDITIONS OR REDITIONS TO THIS DOCUMENT, IN ANY FORM OR BY ANY MEANS WHATSOEVER, WITHOUT THE EXPRESS WRITTEN PERMISSION OF W.K. DICKSON & CO., INC., IS PROHIBITED. NOT FOR RELEASE, DISTRIBUTION OR PUBLICATION EXCEPT FOR FINAL DOCUMENTS ISSUED FOR CONSTRUCTION. UNAUTHORIZED USE OR MODIFICATION OF THIS DOCUMENT WITHOUT WRITTEN CONSENT OF W.K. DICKSON & CO., INC., IS PROHIBITED. NULL COPIES.

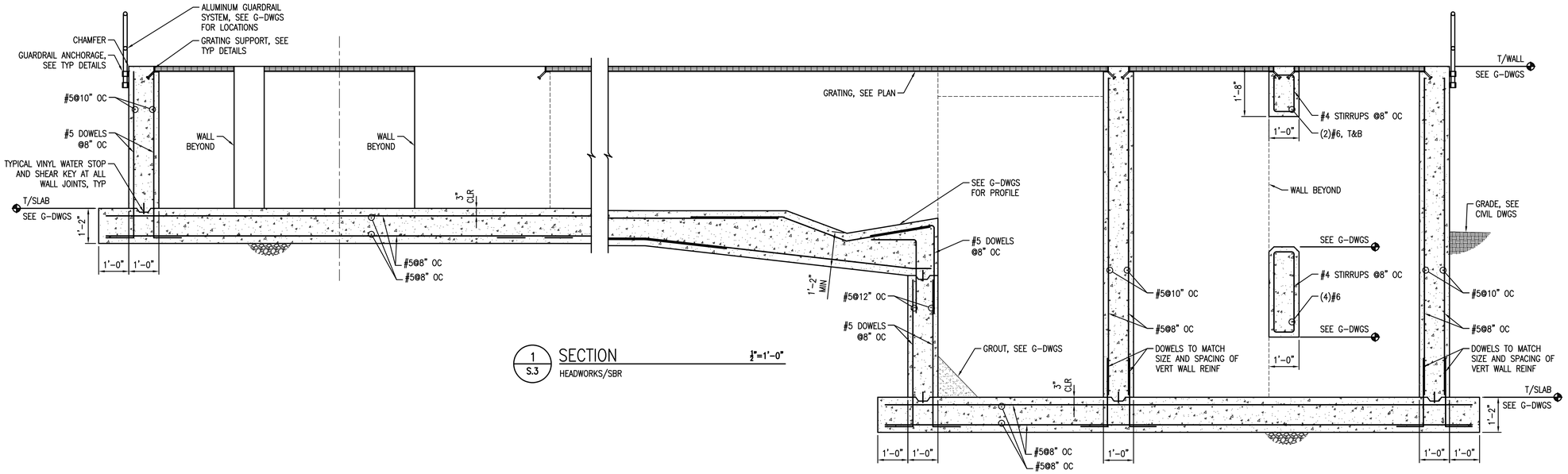

1 / S.3 SECTION HEADWORKS/SBR — 1/2"=1'-0"

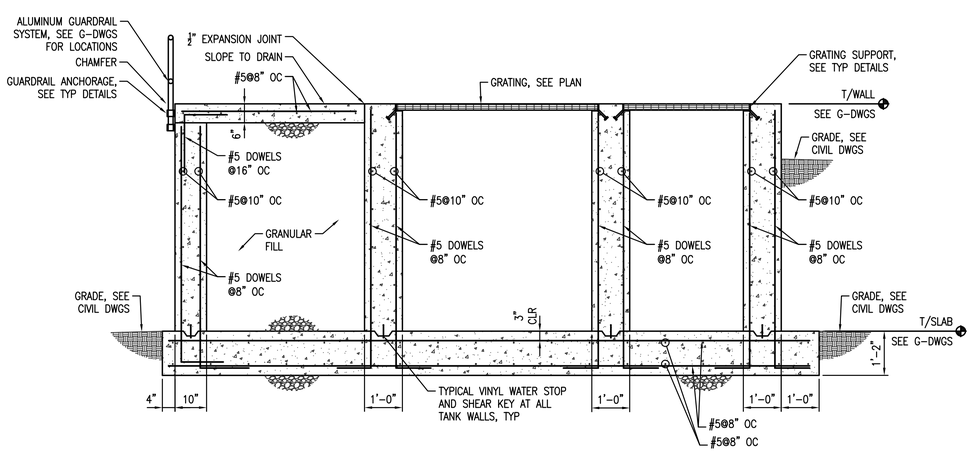

3 / S.3 SECTION HEADWORKS — 1/2"=1'-0"

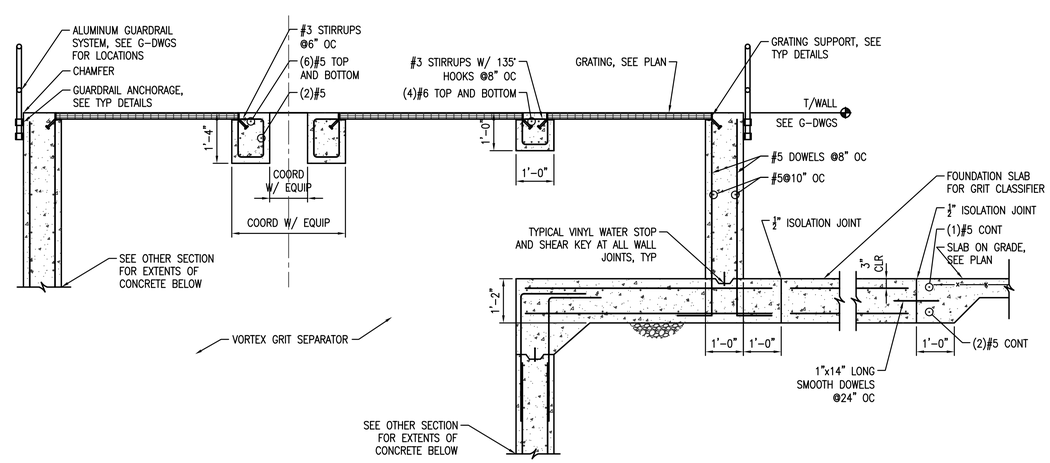

2 / S.3 SECTION HEADWORKS — 1/2"=1'-0"

WK DICKSON
community infrastructure consultants
616 COLONNADE DRIVE
CHARLOTTE, NC 28205
(t)704-334-5348
(f)704-334-0078
WWW.WKDICKSON.COM
NC LICENSE NO.F-0374

NORTH CAROLINA PROFESSIONAL SEAL 024096 ENGINEER MICHAEL A. GARDINER 01/20/2020
PROFESSIONAL SEAL

STEWART
101 N TRYON ST SUITE 1400
CHARLOTTE, NC 28202
T 704.334.7925
FIRM LICENSE #: C-1051
www.stewartinc.com
PROJECT #: R170042

REVISION RECORD

NO.	DATE	DESCRIPTION	BY
	10/09/18	Issue for Owner and NCDEQ Review	

FINAL DESIGN - NOT RELEASED FOR CONSTRUCTION

PROJECT NAME: KILLIAN CREEK WWTP PHASE 3 UPGRADE

DRAWING TITLE: HEADWORKS SECTIONS

PROJ. MGR.:	MAG
DESIGN BY:	BK
DRAWN BY:	DJB
PROJ. DATE:	OCT. 09, 2018

DRAWING NUMBER: S.3

WKD PROJ. NO.: 20170294.00.CL

COPYRIGHT © W.K. DICKSON & CO., INC. ALL RIGHTS RESERVED. REPRODUCTION OR USE OF THE CONTENTS OF THIS DOCUMENT, ADDITIONS OR REDITIONS TO THIS DOCUMENT, IN ANY FORM OR BY ANY MEANS WHATSOEVER, WITHOUT THE PRIOR WRITTEN PERMISSION OF W.K. DICKSON & CO., INC., IS PROHIBITED. NO COPIES, EITHER TO THE PUBLIC OR PRIVATE SECTOR, MAY BE MADE WITHOUT THE PRIOR WRITTEN PERMISSION OF W.K. DICKSON & CO., INC., IS PROHIBITED. NO COPIES, EITHER TO THE PUBLIC OR PRIVATE SECTOR, MAY BE MADE WITHOUT THE PRIOR WRITTEN PERMISSION OF W.K. DICKSON & CO., INC., IS PROHIBITED.

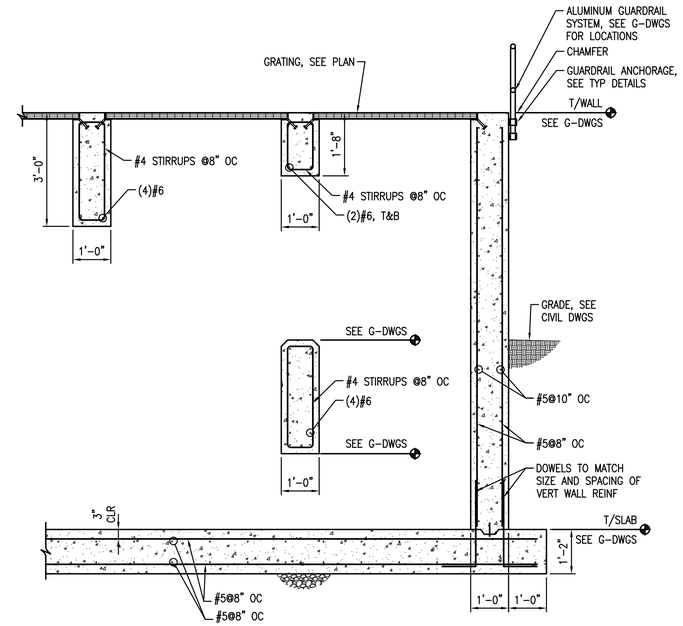

1 / S.4 SECTION ½"=1'-0"
HEADWORKS

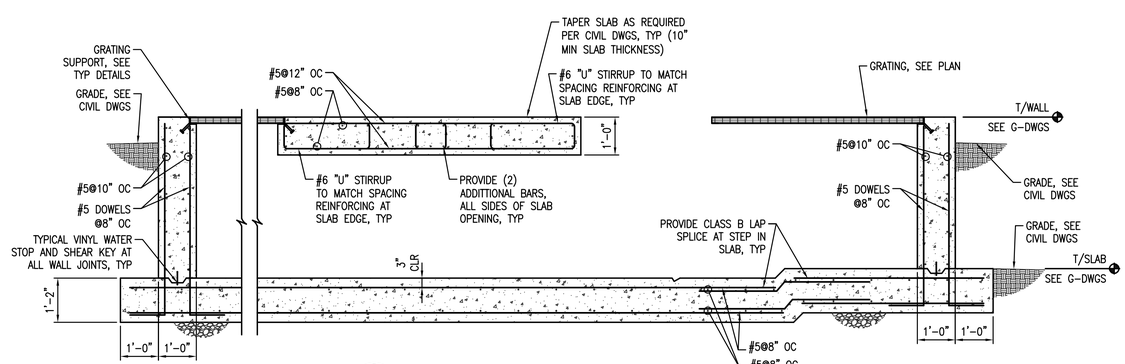

2 / S.4 SECTION ½"=1'-0"
HEADWORKS

FINAL DESIGN - NOT RELEASED FOR CONSTRUCTION

WK DICKSON
community infrastructure consultants
616 COLONNADE DRIVE
CHARLOTTE, NC 28205
(t)704-334-5348
(f)704-334-0078
WWW.WKDICKSON.COM
NC LICENSE NO.F-0374

NORTH CAROLINA PROFESSIONAL SEAL 024096 ENGINEER MICHAEL A. GARDINER
01/20/2020
PROFESSIONAL SEAL

STEWART
101 N TRYON ST SUITE 1400
CHARLOTTE, NC 28202
T:704.334.7925
FIRM LICENSE #: C-1051
www.stewartinc.com
PROJECT #: 8170042

REVISION RECORD

NO.	DATE	DESCRIPTION	BY
	10/09/18	Issue for Owner and NCDEQ Review	

PROJECT NAME: KILLIAN CREEK WWTP PHASE 3 UPGRADE

DRAWING TITLE: HEADWORKS SECTIONS

PROJ. MGR.:	MAG
DESIGN BY:	BK
DRAWN BY:	DJB
PROJ. DATE:	OCT. 09, 2018

DRAWING NUMBER: S.4

WKD PROJ. NO.: 20170294.00.CL

FILE PATH:C:\Projects\MCI\20170294\00.CL - Killian Creek WWTP Ph 3 Upgrade Const\CADD\Plan Set\180401\004_D_SP1_headworksupgrade.dwg Projects\MCI\20170294\00.CL - Killian Creek WWTP Ph 3 Upgrade Const\CADD\Plan Set\180401\004_D_SP1_headworksupgrade.dwg 1600MCI03, 3 1=20 8 10/02/2018

COPYRIGHT © W.K. DICKSON & CO., INC. ALL RIGHTS RESERVED. REPRODUCTION OR USE OF THE CONTENTS OF THIS DOCUMENT, ADDITIONS OR REDITIONS TO THIS DOCUMENT, IN ANY FORM OR BY ANY MEANS WHATSOEVER, WITHOUT THE EXPRESS WRITTEN PERMISSION OF W.K. DICKSON & CO., INC., IS PROHIBITED. NO COPIES, EXCEPTING OTHERWISE EXPRESSLY GRANTED IN WRITING BY W.K. DICKSON & CO., INC., SHALL BE MADE. - NAL COPIES

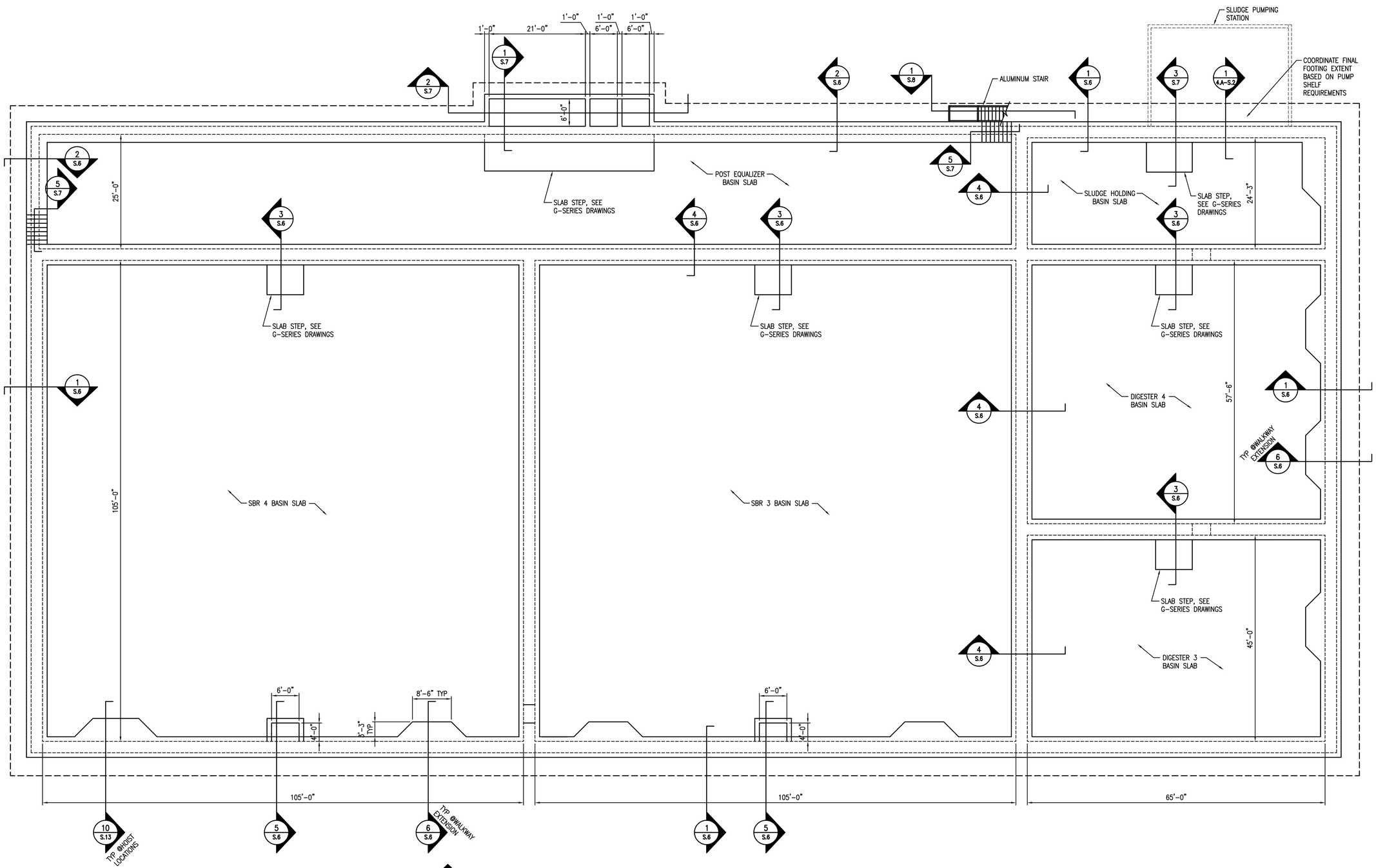

PLANT NORTH

1 S.5 FOUNDATION PLAN 3/32"=1'-0"

NOTES:
1. SEE G-SERIES DRAWINGS FOR TOP OF WALL AND BASING TOP OF SLAB ELEVATIONS AS WELL AS OTHER DIMENSIONS NOT SHOWN ON THIS DRAWING.
2. IF CONFLICT IS PRESENT BETWEEN S & G DRAWINGS, G DRAWING DIMENSIONS SHALL GOVERN.
3. FOR GENERAL NOTES AND ABBREVIATIONS, SEE S.0.
4. REFERENCE ELEVATION 0'-0" EQUAL TO FINISH FLOOR ELEVATION AS NOTED ON CIVIL DRAWINGS.
5. EXISTING SBR INFLUENT MODIFICATION, SEE 4/S.7.

WK DICKSON
community infrastructure consultants
616 COLONNADE DRIVE
CHARLOTTE, NC 28205
(t)704-334-5348
(f)704-334-0078
WWW.WKDICKSON.COM
NC LICENSE NO.F-0374

NORTH CAROLINA PROFESSIONAL SEAL 024096 ENGINEER MICHAEL A. GARDINE
01/20/2020
PROFESSIONAL SEAL

STEWART
101 N TRYON ST SUITE 1400
CHARLOTTE, NC 28202
T:704.334.7920
FIRM LICENSE #: C-1051
www.stewartinc.com
PROJECT #: R170042

REVISION RECORD

NO.	DATE	DESCRIPTION	BY
	10/09/18	Issue for Owner and NCDEQ Review	

PROJECT NAME: KILLIAN CREEK WWTP PHASE 3 UPGRADE

DRAWING TITLE: SBR SYSTEMS AND DIGESTER PLAN

FINAL DESIGN - NOT RELEASED FOR CONSTRUCTION

PROJ. MGR.:	MAG
DESIGN BY:	BK
DRAWN BY:	DJB
PROJ. DATE:	OCT. 09, 2018

DRAWING NUMBER: S.5

WKD PROJ. NO.: 20170294.00.CL

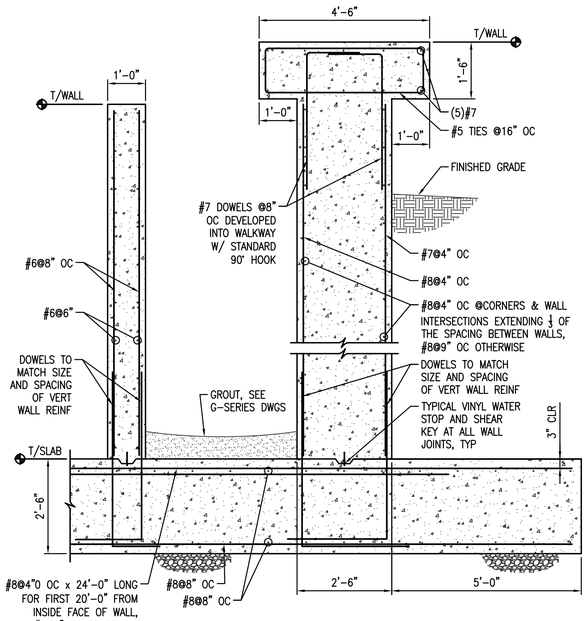

5 S.6 SECTION ½"=1'-0"
AT EXTERIOR WALL

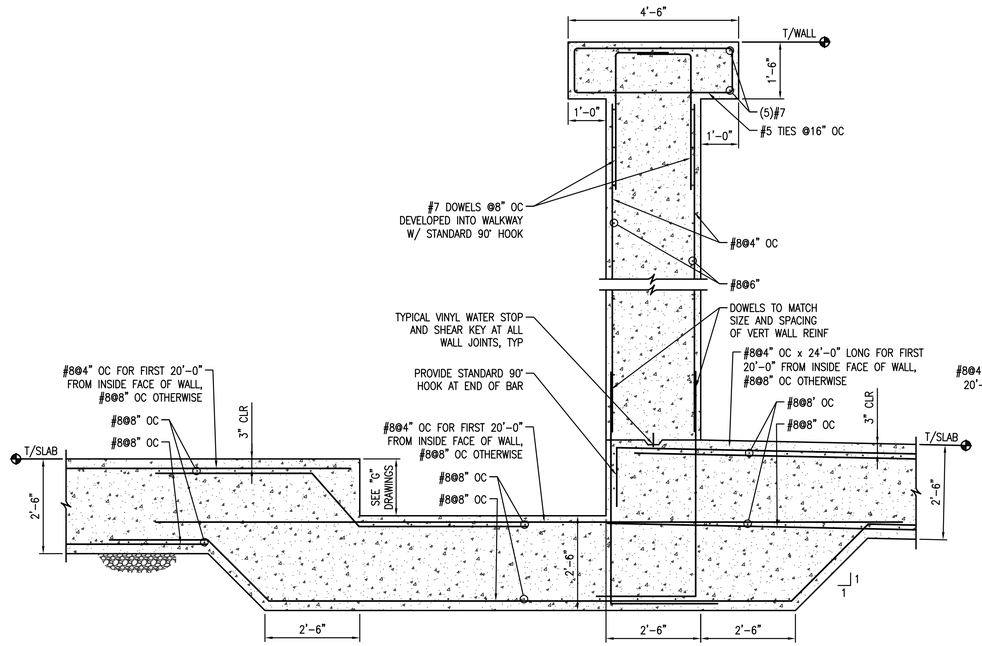

3 S.6 SECTION ½"=1'-0"
AT DRAIN

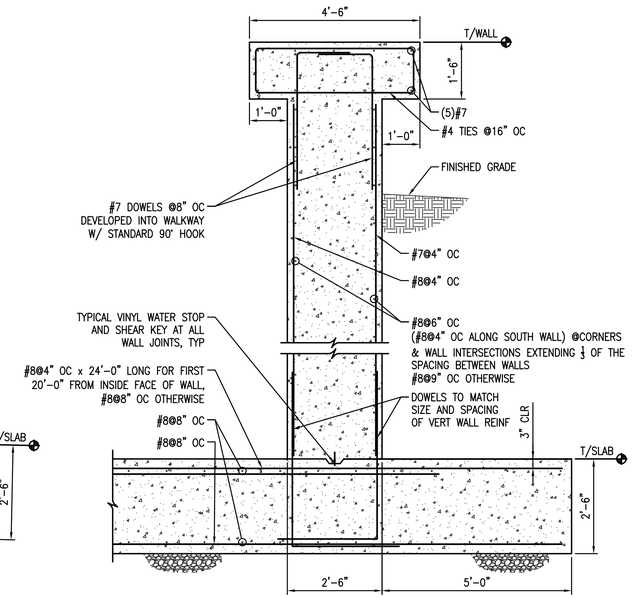

1 S.6 SECTION ½"=1'-0"
AT EXTERIOR WALL

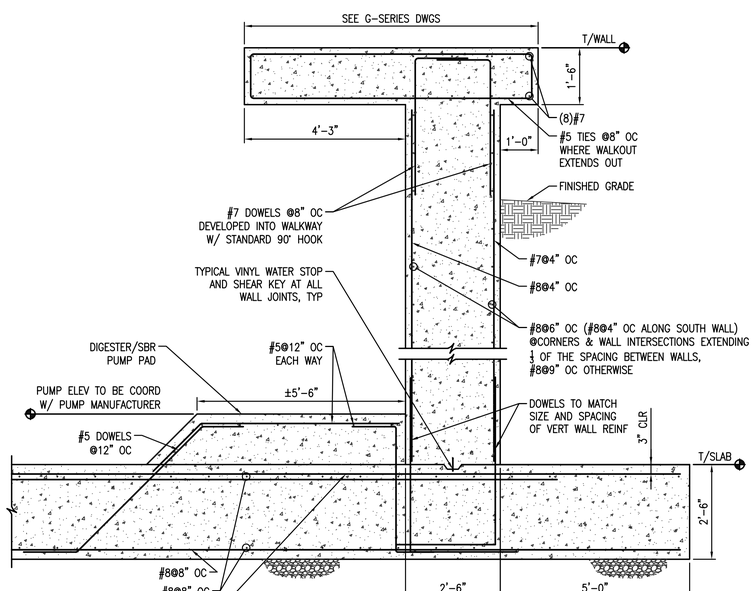

6 S.6 SECTION ½"=1'-0"
AT EXTERIOR WALL

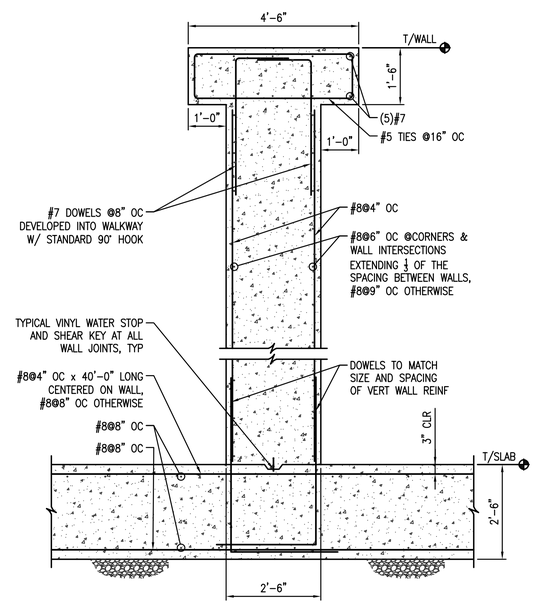

4 S.6 SECTION ½"=1'-0"
AT CENTER WALL

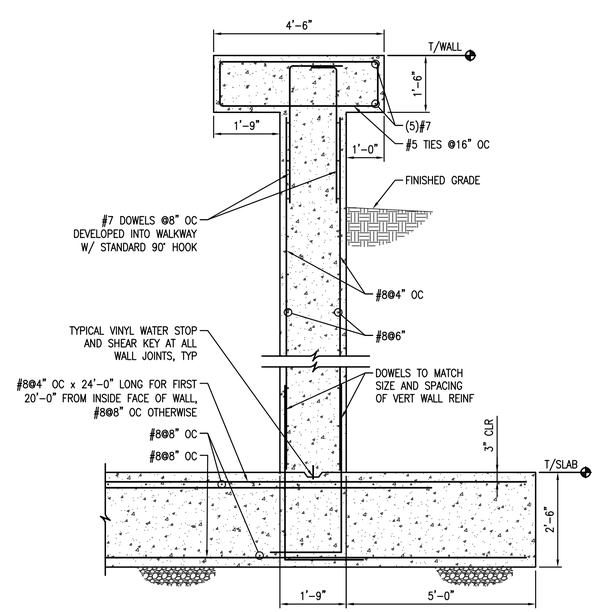

2 S.6 SECTION ½"=1'-0"
AT EXTERIOR WALL

WK DICKSON
community infrastructure consultants
616 COLONNADE DRIVE
CHARLOTTE, NC 28205
(t)704-334-5348
(f)704-334-0078
WWW.WKDICKSON.COM
NC LICENSE NO.F-0374

NORTH CAROLINA PROFESSIONAL SEAL 024096 ENGINEER MICHAEL A. GARDINER 01/20/2020
PROFESSIONAL SEAL

STEWART
101 N TRYON ST SUITE 1400
CHARLOTTE, NC 28202
T 704.334.7920
FIRM LICENSE #: C-1051
www.stewartinc.com
PROJECT #: 817042

REVISION RECORD

NO.	DATE	DESCRIPTION	BY
	10/09/18	Issue for Owner and NCDEQ Review	

PROJECT NAME: KILLIAN CREEK WWTP PHASE 3 UPGRADE

DRAWING TITLE: SBR SYSTEMS AND DIGESTER SECTIONS

PROJ. MGR.:	MAG
DESIGN BY:	BK
DRAWN BY:	DJB
PROJ. DATE:	OCT. 09, 2018

DRAWING NUMBER: S.6

WKD PROJ. NO.: 20170294.00.CL

FINAL DESIGN - NOT RELEASED FOR CONSTRUCTION

COPYRIGHT © WK DICKSON & CO, INC. ALL RIGHTS RESERVED. REPRODUCTION OR USE OF THE CONTENTS OF THIS DOCUMENT, ADDITIONS OR REDUCTIONS TO THIS DOCUMENT, IN ANY FORM OR BY ANY MEANS WHATSOEVER WITHOUT WRITTEN PERMISSION OF W.K. DICKSON & CO., INC. IS PROHIBITED. NON-COPIES OF THIS DOCUMENT, IN ANY FORM OR BY ANY MEANS WHATSOEVER WITHOUT WRITTEN PERMISSION OF W.K. DICKSON & CO., INC. IS DEEMED - NON COPIES.

COPYRIGHT © W.K. DICKSON & CO., INC. ALL RIGHTS RESERVED. REPRODUCTION OR USE OF THE CONTENTS OF THIS DOCUMENT, IN WHOLE OR PARTS THEREOF, WITHOUT WRITTEN CONSENT OF W.K. DICKSON & CO., INC. IS PROHIBITED. ONE COPY MAY BE MADE FOR PERSONAL USE.

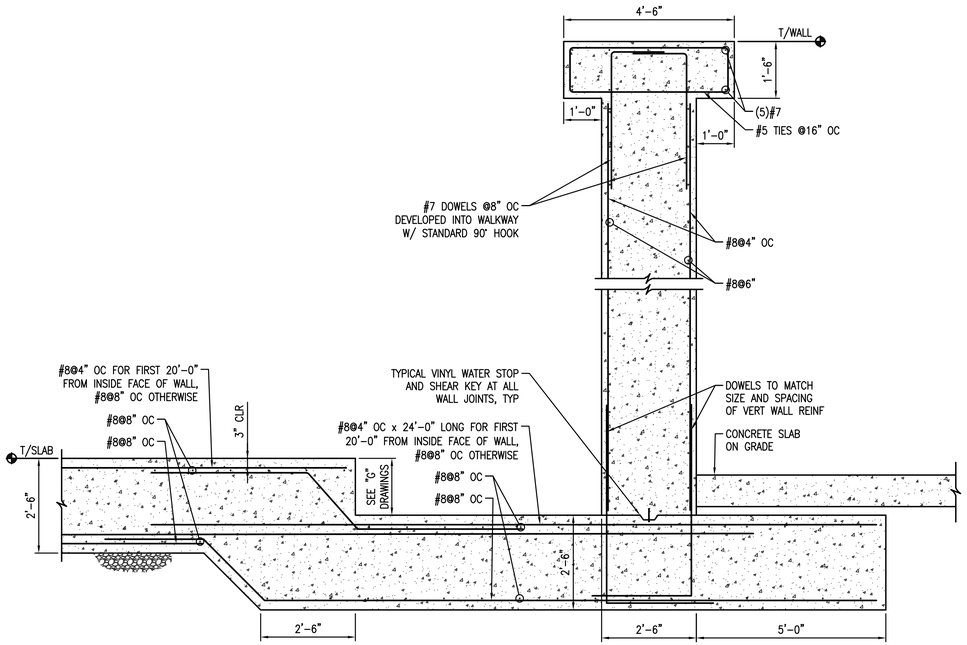

3 S.7 SECTION ½"=1'-0"
SLUDGE HOLDING BASIN AT DRAIN

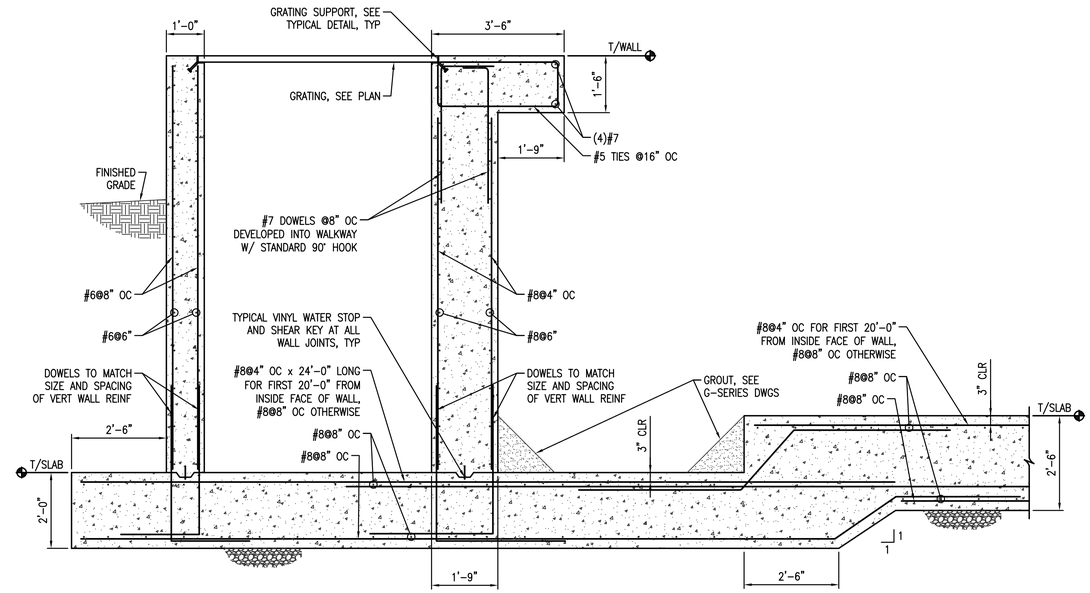

1 S.7 SECTION ½"=1'-0"
POST EQUALIZER DRAIN/EFFLUENT VAULT

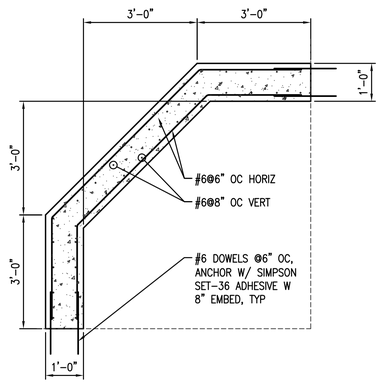

4 S.7 PLAN ½"=1'-0"
EXISTING SBR INFLUENT

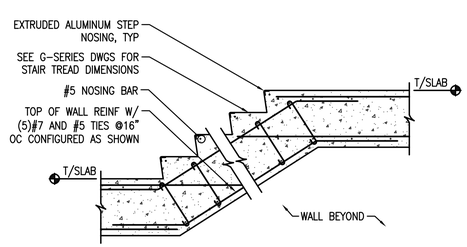

5 S.7 SECTION ½"=1'-0"
SBR WALKWAY STEPS

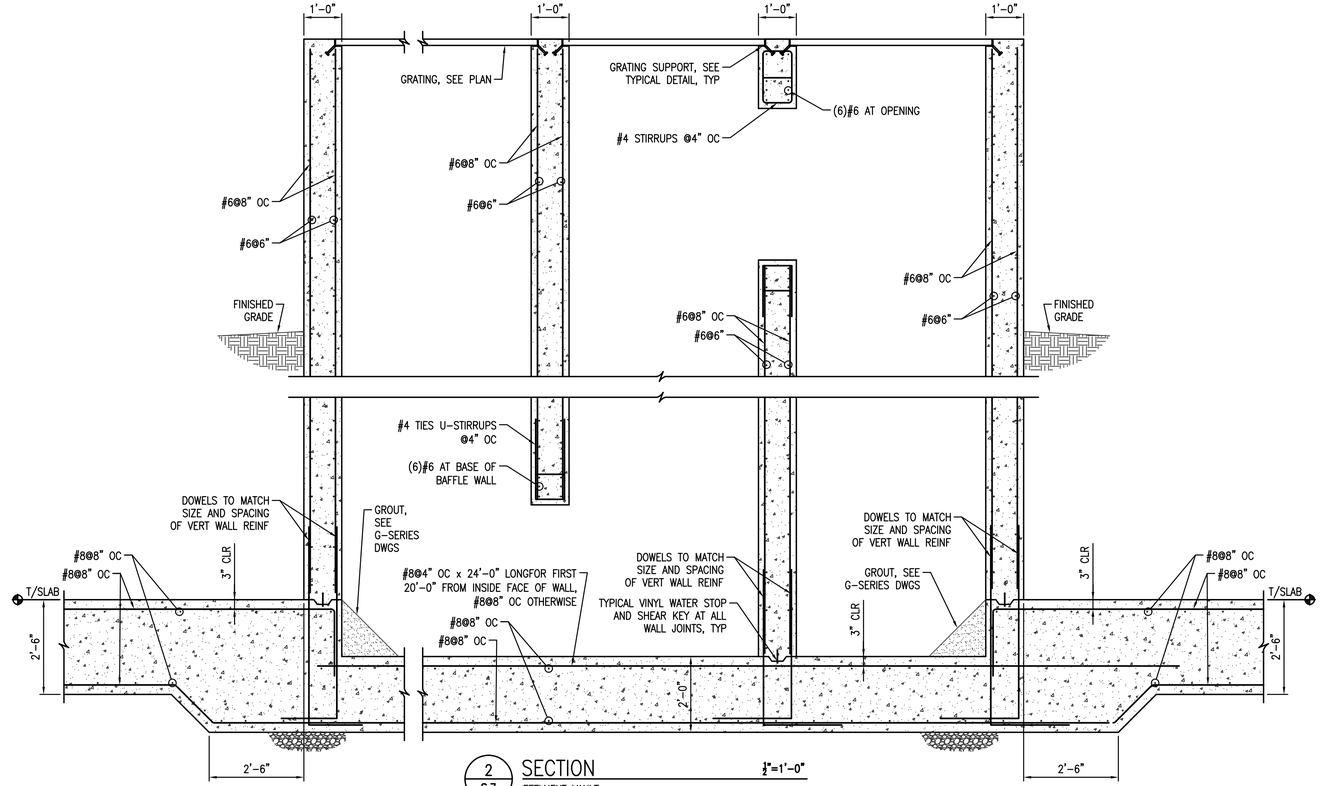

2 S.7 SECTION ½"=1'-0"
EFFLUENT VAULT

FINAL DESIGN - NOT RELEASED FOR CONSTRUCTION

WK DICKSON
community infrastructure consultants
616 COLONNADE DRIVE
CHARLOTTE, NC 28205
(t)704-334-5348
(f)704-334-0078
WWW.WKDICKSON.COM
NC LICENSE NO.F-0374

NORTH CAROLINA PROFESSIONAL SEAL 024096 ENGINEER MICHAEL A. GARDINER
01/20/2020
PROFESSIONAL SEAL

STEWART
101 N TRYON ST SUITE 1400
CHARLOTTE, NC 28202
T 704.334.7625
FIRM LICENSE #: C-1051
www.stewartinc.com
PROJECT #: R17042

REVISION RECORD

NO.	DATE	DESCRIPTION	BY
	10/09/18	Issue for Owner and NCDEQ Review	

PROJECT NAME: KILLIAN CREEK WWTP PHASE 3 UPGRADE

DRAWING TITLE: SBR SYSTEMS AND DIGESTER SECTIONS

PROJ. MGR.:	MAG
DESIGN BY:	BK
DRAWN BY:	DJB
PROJ. DATE:	OCT. 09, 2018
DRAWING NUMBER:	S.7
WKD PROJ. NO.:	20170294.00.CL

COPYRIGHT © W.K. DICKSON & CO., INC. ALL RIGHTS RESERVED. REPRODUCTION OR USE OF THE CONTENTS OF THIS DOCUMENT, ADDITIONS OR REDUCTIONS TO THIS DOCUMENT, IN WHOLE OR IN PART, WITHOUT WRITTEN CONSENT OF W.K. DICKSON & CO., INC., IS PROHIBITED. ONLY COPIES FROM THE ORIGINAL CONTINUITY RECORD OF W.K. DICKSON & CO., INC., IS TO BE DEEMED TRUE COPIES.

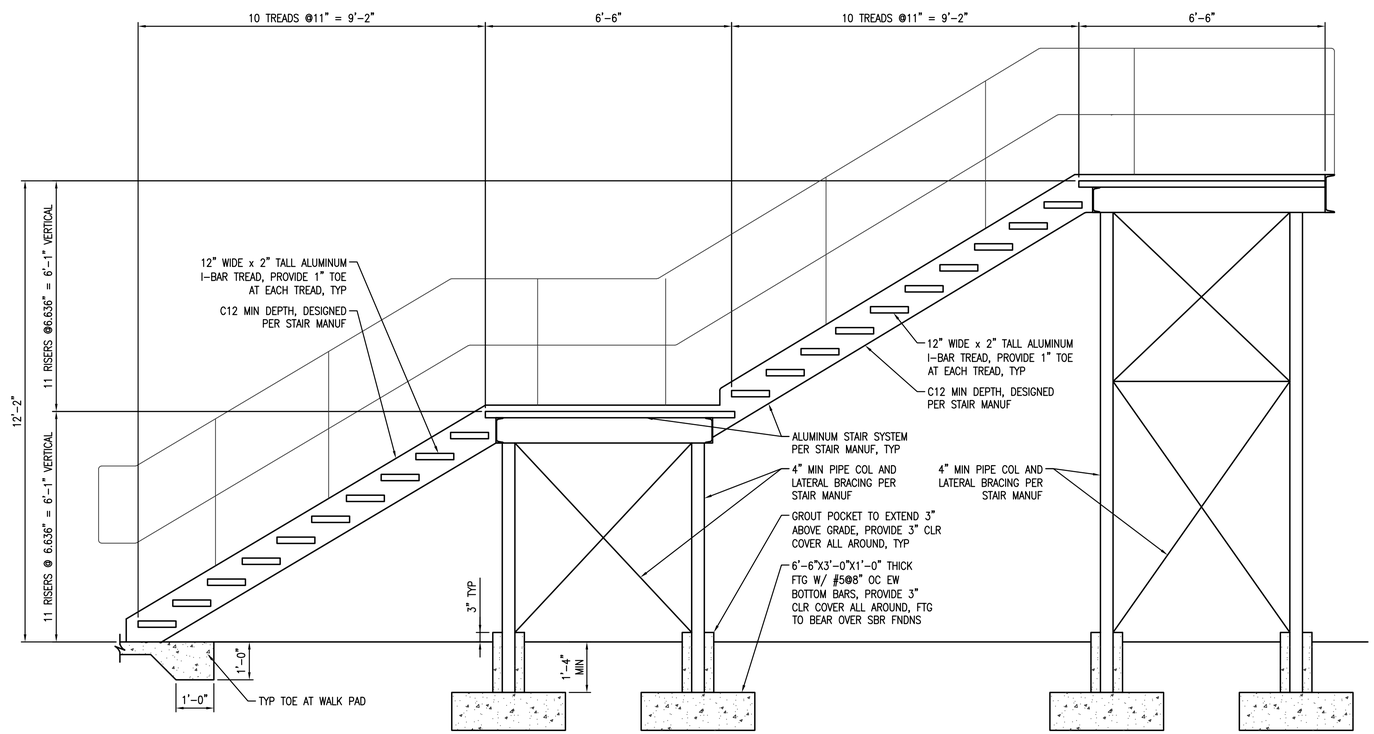

1 / S.8 SECTION AT STAIR ½"=1'-0"

FINAL DESIGN - NOT RELEASED FOR CONSTRUCTION

WK DICKSON
community infrastructure consultants
616 COLONNADE DRIVE
CHARLOTTE, NC 28205
(t)704-334-5348
(f)704-334-0078
WWW.WKDICKSON.COM
NC LICENSE NO.F-0374

NORTH CAROLINA PROFESSIONAL SEAL 024096 ENGINEER MICHAEL A. GARDLINK
01/20/2020
PROFESSIONAL SEAL

STEWART
101 N TRYON ST SUITE 1400
CHARLOTTE, NC 28202
T 704.334.7925
FIRM LICENSE #: C-1051
www.stewartINC.com
PROJECT #: R17042

REVISION RECORD

NO.	DATE	DESCRIPTION	BY
	10/09/18	Issue for Owner and NCDEQ Review	

PROJECT NAME: KILLIAN CREEK WWTP PHASE 3 UPGRADE

DRAWING TITLE: SBR SYSTEMS AND DIGESTER SECTIONS

PROJ. MGR.:	MAG
DESIGN BY:	BK
DRAWN BY:	DJB
PROJ. DATE:	OCT. 09, 2018

DRAWING NUMBER: S.8

WKD PROJ. NO.: 20170294.00.CL

FILE PATH:C:\Projects\MCC\20170294\00_CL\Killian Creek WWTP Ph 3 Upgrade Const\CADD\Plan Set\TBCA01\00\00_CL\01_Header\wkdpmaster.dwg Projects\MCC\20170294\00_CL\Killian Creek WWTP Ph 3 Upgrade Const\CADD\Plan Set\TBCA01\00\00_CL\01_Header\wkdpmaster.dwg WKDMACD, 3:14:29 10/05/2018 10:05:29 AM

COPYRIGHT © WK DICKSON & CO, INC. ALL RIGHTS RESERVED. REPRODUCTION OR USE OF THE CONTENTS OF THIS DOCUMENT, ADDITIONS OR REDITIONS TO THIS DOCUMENT, IN ANY FORM OR BY ANY MEANS WHATSOEVER, WITHOUT THE EXPRESSED WRITTEN CONSENT OF W.K. DICKSON & CO., INC., IS PROHIBITED. NON-COPYRIGHTED DOCUMENTS MAY ALSO BE PROTECTED UNDER OTHER LAWS. RECIPIENTS MAY NOT COPY, DISTRIBUTE, OR DISCLOSE THIS DOCUMENT IN WHOLE OR IN PART WITHOUT THE EXPRESSED WRITTEN PERMISSION OF W.K. DICKSON & CO., INC. IF THIS DOCUMENT IS RECEIVED ELECTRONICALLY, THE ENTIRE RISK OF THE RECIPIENT'S USE OF THE DOCUMENT IS ASSUMED BY THE RECIPIENT. UNAUTHORIZED USE OF THIS DOCUMENT MAY VIOLATE COPYRIGHT, TRADEMARK, AND OTHER LAWS. UNCONTROLLED COPIES MAY NOT BE REVISED. NON-COPIES

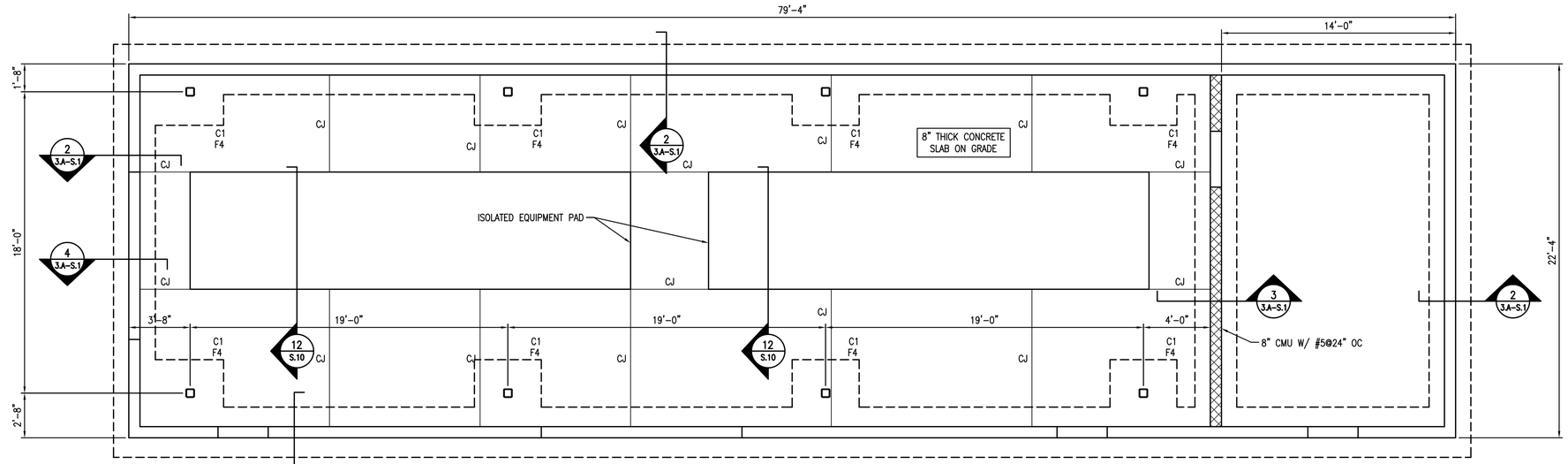

PLANT NORTH

1 3.A-S.1 FOUNDATION PLAN

1/4"=1'-0"

NOTES:
1. FOR GENERAL NOTES AND ABBREVIATIONS, SEE S.0.
2. REFERENCE ELEVATION 0'-0" EQUAL TO FINISH FLOOR ELEVATION 702.00 AS NOTED ON CIVIL DRAWINGS.
3. TOP OF ALL EXTERIOR FOOTINGS TO BE 1'-4" BELOW FINISHED FLOOR.
4. TOP OF ALL INTERIOR FOOTINGS TO BE 1'-4" BELOW FINISHED FLOOR.
5. "C1" INDICATES HSS6x6x3/8 COLUMN.
6. "F#" INDICATES FOOTING TYPE, SEE 5/S.10.
7. SEE S.10 FOR TYPICAL SLAB ON GRADE DETAILS.
8. "CJ" INDICATES SLAB CONTROL JOINT, SEE S.10.

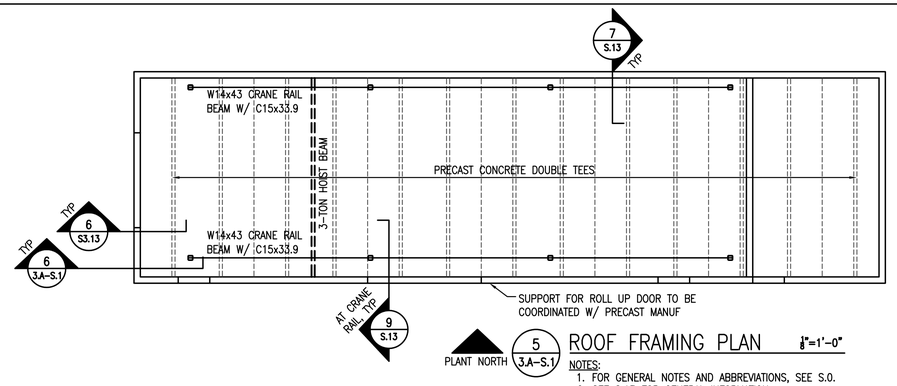

PLANT NORTH

5 3.A-S.1 ROOF FRAMING PLAN

1/8"=1'-0"

NOTES:
1. FOR GENERAL NOTES AND ABBREVIATIONS, SEE S.0.
2. SEE S.13 FOR GENERAL INFORMATION.
3. ALL STEEL EXCEPT FOR BRIDGE CRANE SUPPORTING BEAMS AND COLUMNS TO BE GALVANIZED.

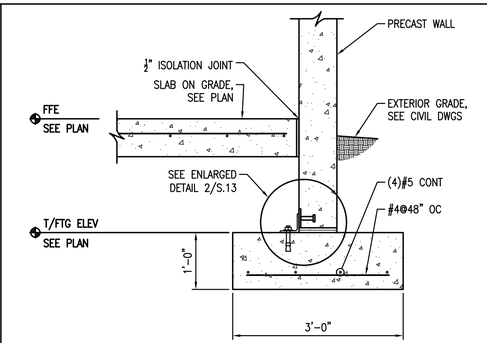

2 3.A-S.1 SECTION

3/4"=2'-0"

TYPICAL EXTERIOR FOOTING

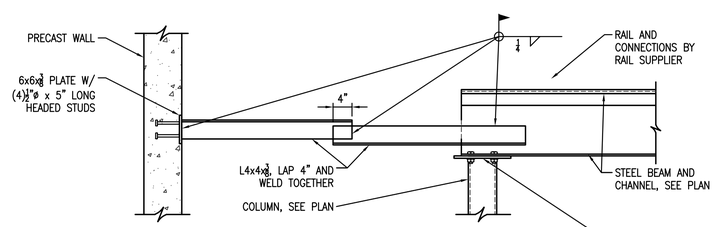

6 3.A-S.1 SECTION

3/4"=1'-0"

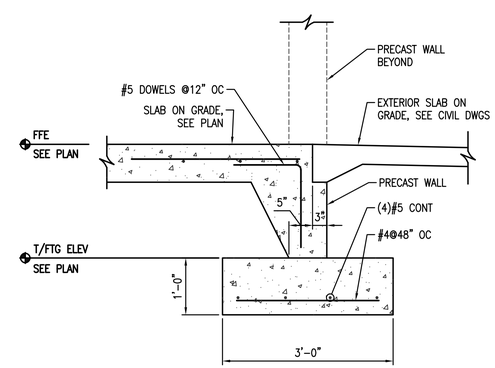

4 3.A-S.1 SECTION

3/4"=2'-0"

AT DOOR OPENINGS

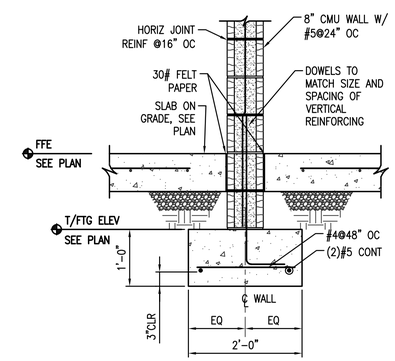

3 3.A-S.1 SECTION

3/4"=1'-0"

TYPICAL INTERIOR FOOTING

WK DICKSON
community infrastructure consultants
616 COLONNADE DRIVE
CHARLOTTE, NC 28205
(t)704-334-5348
(f)704-334-0078
WWW.WKDICKSON.COM
NC LICENSE NO.F-0374

NORTH CAROLINA PROFESSIONAL SEAL 024096 ENGINEER MICHAEL A. GARDINER 01/20/2020

PROFESSIONAL SEAL

STEWART
101 N TRYON ST SUITE 1400
CHARLOTTE, NC 28202
T:704.334.7920
FIRM LICENSE #: C-1051
www.stewartinc.com
PROJECT #: 8170042

REVISION RECORD

NO.	DATE	DESCRIPTION	BY
	10/09/18	Issue for Owner and NCDEQ Review	

PROJECT NAME: KILLIAN CREEK WWTP PHASE 3 UPGRADE

DRAWING TITLE: BLOWER BUILDING FOUNDATION PLAN AND SECTIONS

FINAL DESIGN - NOT RELEASED FOR CONSTRUCTION

PROJ. MGR.:	MAG
DESIGN BY:	BK
DRAWN BY:	DJB
PROJ. DATE:	OCT. 09, 2018

DRAWING NUMBER: 3.A-S.1

WKD PROJ. NO.: 20170294.00.CL

COPYRIGHT © W.K. DICKSON & CO., INC. ALL RIGHTS RESERVED. REPRODUCTION OR USE OF THE CONTENTS OF THIS DOCUMENT, ADDITIONS OR REDITIONS TO THIS DOCUMENT, IN ANY FORM OR BY ANY MEANS WHATSOEVER WITHOUT THE PRIOR WRITTEN PERMISSION OF W.K. DICKSON & CO., INC., IS PROHIBITED. TRUE COPIES OF THIS DOCUMENT MAY BE MADE BY RECIPIENTS FOR USE BY THEMSELVES OR WITHIN THEIR ORGANIZATIONS, BUT THEY ARE NOT TO BE SOLD OR DISTRIBUTED OUTSIDE THEIR ORGANIZATIONS WITHOUT THE PRIOR WRITTEN PERMISSION OF W.K. DICKSON & CO., INC., IS TO BE MADE. TRUE COPIES TO BE MADE BY RECIPIENTS MUST INCLUDE THIS NOTICE.

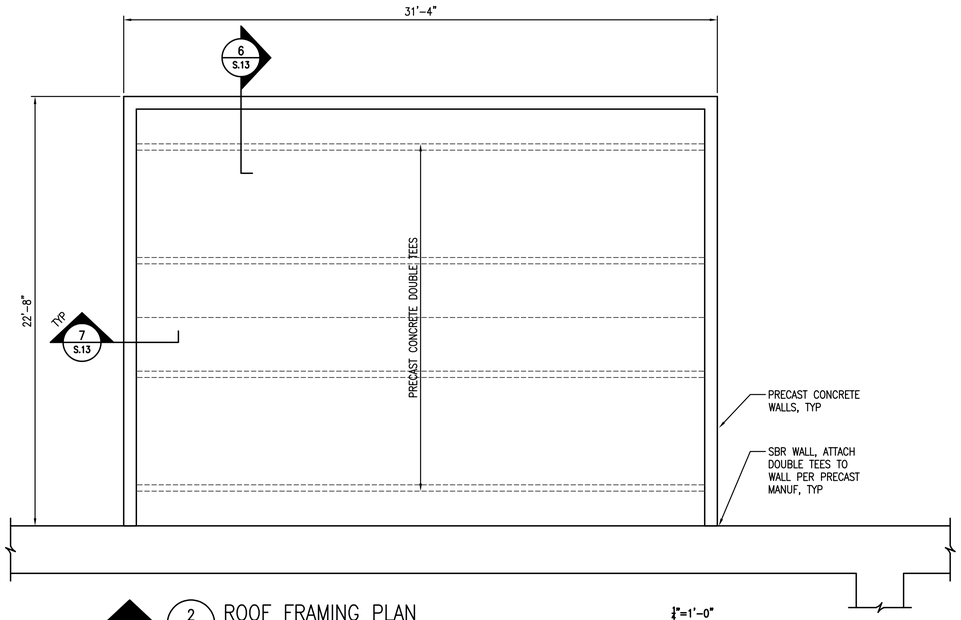

PLANT NORTH

2 / 4.A-S.1 ROOF FRAMING PLAN

1/4"=1'-0"

NOTES:
1. FOR GENERAL NOTES AND ABBREVIATIONS, SEE S.0.
2. COORDINATE ANY ROOF OPENINGS IN PRECAST WITH ARCHITECTS DRAWINGS.
3. SEE S.13 FOR TYPICAL PRECAST DETAILS.

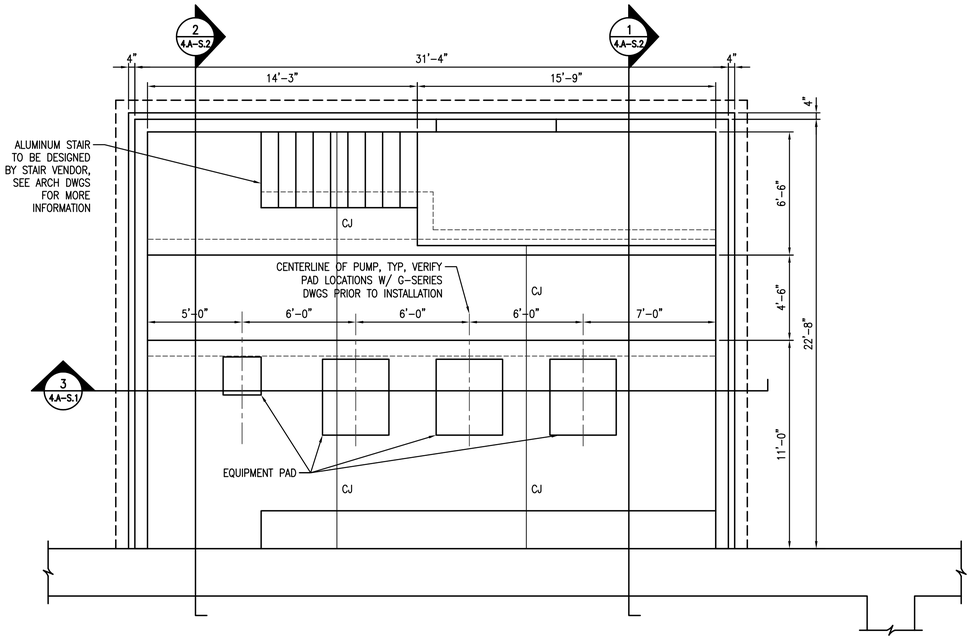

PLANT NORTH

1 / 4.A-S.1 FOUNDATION PLAN

1/4"=1'-0"

NOTES:
1. FOR GENERAL NOTES AND ABBREVIATIONS, SEE S.0.
2. REFERENCE ELEVATION 0'-0" EQUAL TO FINISH FLOOR ELEVATION 677.67' AS NOTED ON CIVIL DRAWINGS.
3. SEE G-SERIES DRAWINGS FOR SLAB STEP ELEVATIONS AS THEY VARY AS WELL AS ADDITIONAL DIMENSIONS AND OTHER INFORMATION.
4. "CJ" INDICATES SLAB CONTROL JOINT, SEE S.10.

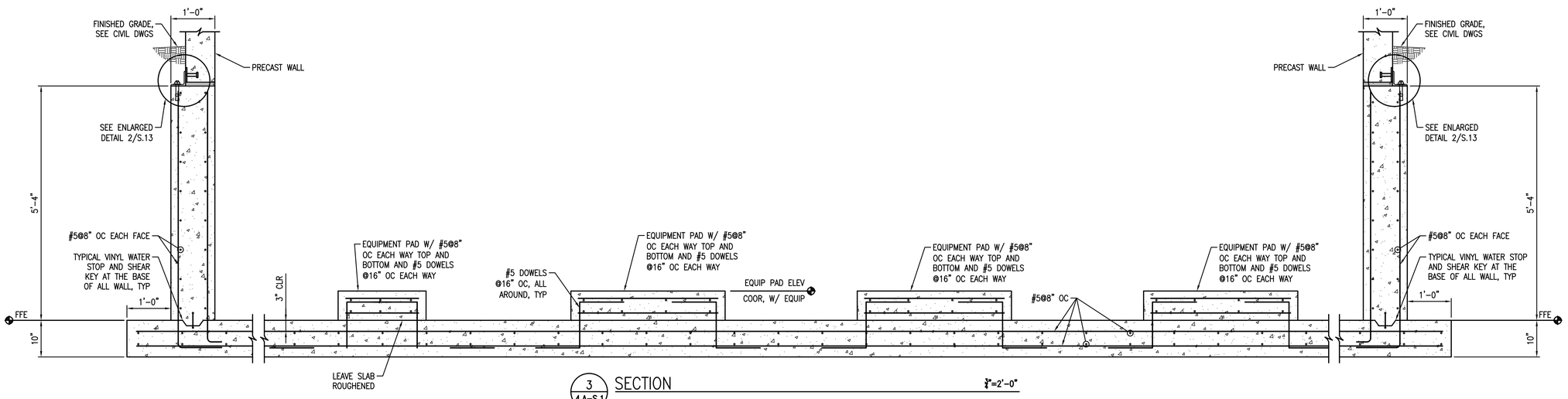

3 / 4.A-S.1 SECTION

3/4"=2'-0"

WK DICKSON
community infrastructure consultants
616 COLONNADE DRIVE
CHARLOTTE, NC 28205
(t)704-334-5348
(f)704-334-0078
WWW.WKDICKSON.COM
NC LICENSE NO.F-0374

NORTH CAROLINA PROFESSIONAL ENGINEER SEAL 024096 MICHAEL A. GARDINE
01/20/2020
PROFESSIONAL SEAL

STEWART
101 N TRYON ST SUITE 1400
CHARLOTTE, NC 28202
T:704.334.7925
FIRM LICENSE #: C-1051
www.stewartinc.com
PROJECT #: R17042

REVISION RECORD

NO.	DATE	DESCRIPTION	BY
	10/09/18	Issue for Owner and NCDEQ Review	

PROJECT NAME: KILLIAN CREEK WWTP PHASE 3 UPGRADE

DRAWING TITLE: SLUDGE PUMP BUILDING FOUNDATION PLAN AND SECTIONS

FINAL DESIGN - NOT RELEASED FOR CONSTRUCTION

PROJ. MGR.:	MAG
DESIGN BY:	BK
DRAWN BY:	DJB
PROJ. DATE:	OCT. 09, 2018

DRAWING NUMBER: 4.A-S.1

WKD PROJ. NO.: 20170294.00.CL

COPYRIGHT © W.K. DICKSON & CO., INC. ALL RIGHTS RESERVED. REPRODUCTION OR USE OF THE CONTENTS OF THIS DOCUMENT, ADDITIONS OR REDITIONS TO THIS, OR OTHER DRAWINGS OR SPECIFICATIONS WITHOUT WRITTEN PERMISSION IS PROHIBITED. NO EXPRESS OR IMPLIED WARRANTY IS GIVEN BY THE DELIVERY OF THESE DRAWINGS OR SPECIFICATIONS. ALL RIGHTS, INCLUDING BUT NOT LIMITED TO, COPYRIGHT AND OWNERSHIP OF IDEAS, DESIGNS & CONCEPTS, IS RESERVED. NO COPIES, REPRODUCTIONS OR DERIVATIVES MAY BE MADE WITHOUT PRIOR WRITTEN CONSENT.

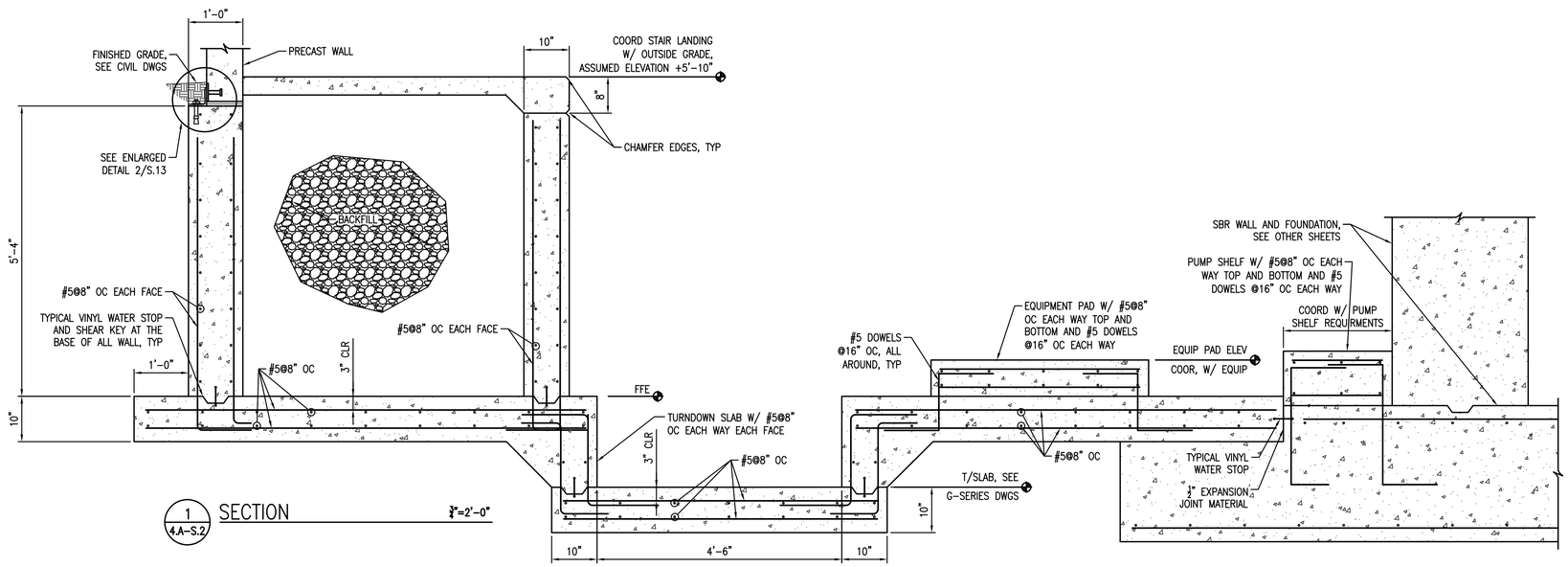

1 / 4.A-S.2 SECTION ¾"=2'-0"

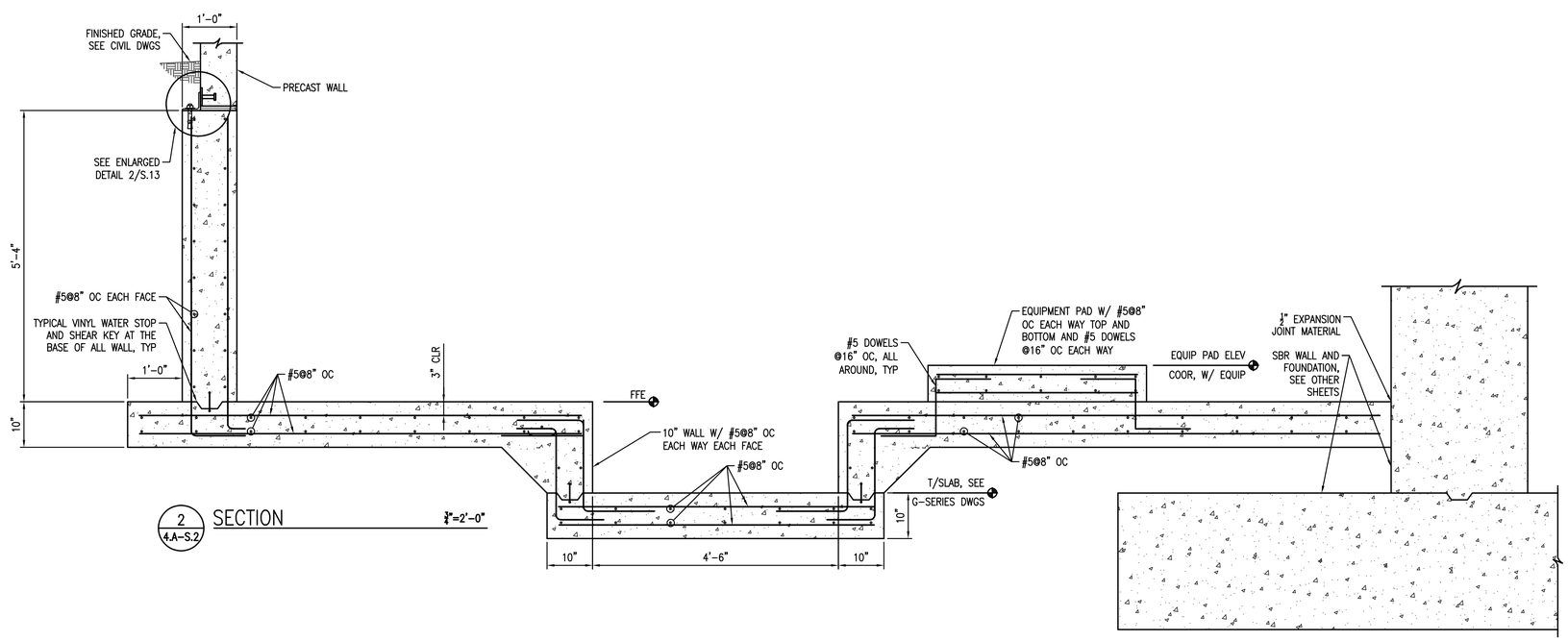

2 / 4.A-S.2 SECTION ¾"=2'-0"

WK DICKSON
community infrastructure consultants
616 COLONNADE DRIVE
CHARLOTTE, NC 28205
(t)704-334-5348
(f)704-334-0078
WWW.WKDICKSON.COM
NC LICENSE NO.F-0374

NORTH CAROLINA PROFESSIONAL SEAL 024096 ENGINEER MICHAEL A. GARDINER
01/20/2020
PROFESSIONAL SEAL

STEWART
101 N TRYON ST SUITE 1400
CHARLOTTE, NC 28202
T:704.334.7925
FIRM LICENSE #: C-1051
www.stewartinc.com
PROJECT #: R170042

REVISION RECORD

NO.	DATE	DESCRIPTION	BY
	10/09/18	Issue for Owner and NCDEQ Review	

FINAL DESIGN - NOT RELEASED FOR CONSTRUCTION

PROJECT NAME: KILLIAN CREEK WWTP PHASE 3 UPGRADE

DRAWING TITLE: SLUDGE PUMP BUILDING SECTIONS

PROJ. MGR.:	MAG
DESIGN BY:	BK
DRAWN BY:	DJB
PROJ. DATE:	OCT. 09, 2018

DRAWING NUMBER: 4.A-S.2

WKD PROJ. NO.: 20170294.00.CL

FILE PATH:C:\Projects\JMC\20170294\00_ - Killian Creek WWTP Ph 3 Upgrade Const\CADD\Plan Set\TBCA01\TBM_D_SPT_Header\wordsplashBlue.dwg 6/20/2023, 3:14:29 6/20/2023

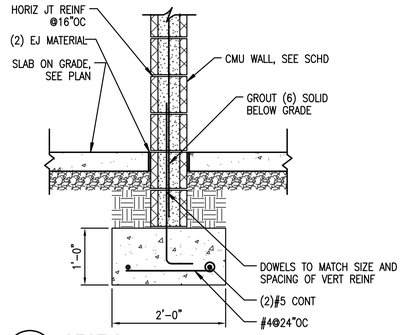

5 / 5.A-S.1 SECTION ¾"=2'-0"

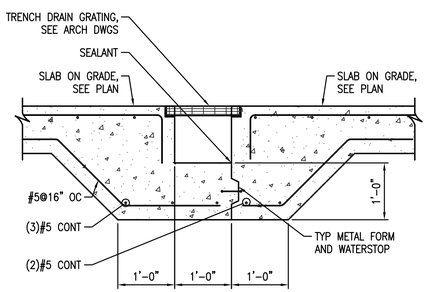

6 / 5.A-S.1 SECTION ¾"=2'-0"
AT TRENCH DRAIN

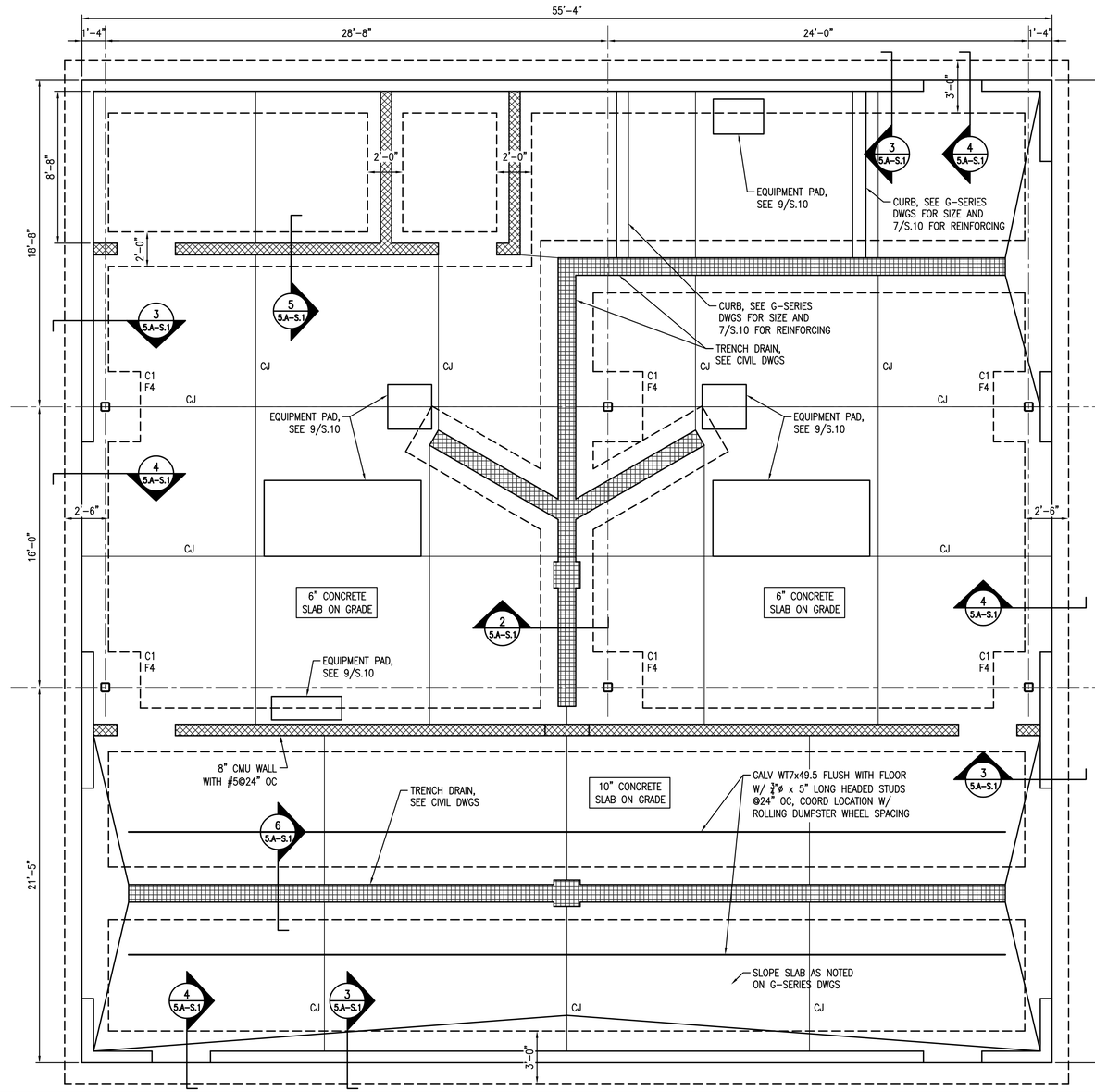

1 / 5.A-S.1 SLUDGE DEWATERING FOUNDATION PLAN ¼"=1'-0"

NOTES:
1. FOR GENERAL NOTES AND ABBREVIATIONS, SEE S.0.
2. SEE G-SERIES DRAWINGS FOR TRENCH DRAIN SLOPES AS THEY VARY AS WELL AS ADDITIONAL DIMENSIONS AND OTHER INFORMATION.
3. REFERENCE ELEVATION 0'-0" EQUAL TO FINISH FLOOR ELEVATION 684.50' AS NOTED ON CIVIL DRAWINGS.
4. TOP OF ALL INTERIOR AND EXTERIOR FOOTINGS TO BE 1'-4" BELOW FINISHED FLOOR.
5. "F#" INDICATES FOOTING TYPE, SEE 5/S.10.
6. "C1" INDICATES HSS6x6x½ COLUMN.
7. ANY STEEL WITHIN DUMPSTER ROOM SHALL BE GALVANIZED.
8. "CJ" INDICATES SLAB CONTROL JOINT, SEE S.10.

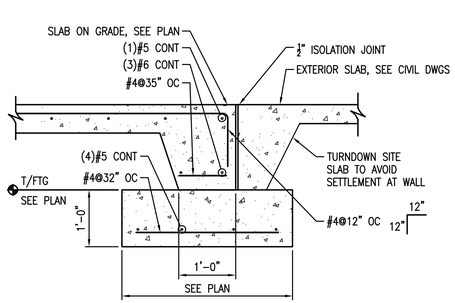

4 / 5.A-S.1 SECTION ¾"=2'-0"
AT DOOR OPENINGS

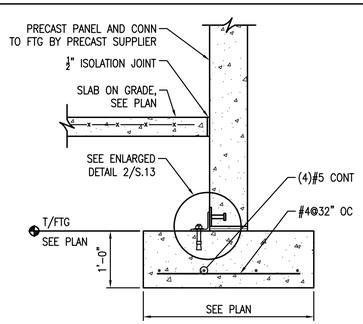

3 / 5.A-S.1 SECTION ¾"=2'-0"
TYPICAL WALL

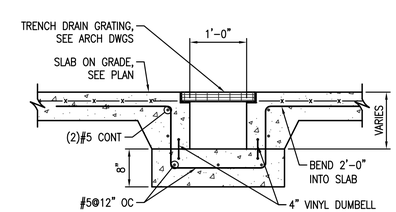

2 / 5.A-S.1 SECTION ¾"=2'-0"

COPYRIGHT © WK DICKSON & CO., INC. ALL RIGHTS RESERVED. REPRODUCTION OR USE OF THE CONTENTS OF THIS DOCUMENT, ADDITIONS OR REDITIONS TO THIS, OTHER DRAWINGS OR SPECIFICATIONS WITHOUT WRITTEN CONSENT OF W.K. DICKSON & CO., INC., IS PROHIBITED. THE CONTENTS OF THIS DOCUMENT, IN WHOLE OR IN PART, BECOMES THE PROPERTY OF W.K. DICKSON & CO., INC., IS TO BE RETURNED. "NULL COPIES" OR "PRELIMINARY" DOCUMENTS ARE NOT TO BE USED FOR CONSTRUCTION.

WK DICKSON
community infrastructure consultants
616 COLONNADE DRIVE
CHARLOTTE, NC 28205
(t)704-334-5348
(f)704-334-0078
WWW.WKDICKSON.COM
NC LICENSE NO.F-0374

NORTH CAROLINA PROFESSIONAL SEAL 024096 ENGINEER MICHAEL A. GARDINER 01/20/2020
PROFESSIONAL SEAL

STEWART
101 N TRYON ST SUITE 1400
CHARLOTTE, NC 28202
T:704.334.7925
FIRM LICENSE #: C-1051
www.stewartinc.com
PROJECT #: 817042

REVISION RECORD

NO.	DATE	DESCRIPTION	BY
	10/09/18	Issue for Owner and NCDEQ Review	

FINAL DESIGN - NOT RELEASED FOR CONSTRUCTION

PROJECT NAME: KILLIAN CREEK WWTP PHASE 3 UPGRADE

DRAWING TITLE: SLUDGE DEWATERING BUILDING FOUNDATION PLAN AND SECTIONS

PROJ. MGR.:	MAG
DESIGN BY:	BK
DRAWN BY:	DJB
PROJ. DATE:	OCT. 09, 2018

DRAWING NUMBER: 5.A-S.1

WKD PROJ. NO.: 20170294.00.CL

FILE PATH:C:\Projects\JMC\20170294\00.CL - Killian Creek WWTP Ph 3 Upgrade Const\CADD\Plan Set\TBD\017294_D_SP1_Headworks\operations\dwg\Projects\JMC\20170294\00.CL - Killian Creek WWTP Ph 3 Upgrade Const\CADD\Plan Set\TBD\017294_D_SP1_Headworks\operations\dwg 5/29/2020, 1:42:28 10/05/2018

COPYRIGHT © W.K. DICKSON & CO., INC. ALL RIGHTS RESERVED. REPRODUCTION OR USE OF THE CONTENTS OF THIS DOCUMENT, ADDITIONS OR REDITIONS TO THIS, OR OTHER PLANS WITHOUT WRITTEN PERMISSION IS PROHIBITED. ELECTRONIC MEDIA DERIVED FROM THIS DOCUMENT MAY NOT BE USED FOR ANY PURPOSE OTHER THAN THE SPECIFIC PROJECT FOR WHICH IT WAS PREPARED. ELECTRONIC COPIES DO NOT SUPERSEDE THE SEALED, SIGNED AND DATED HARD COPY.

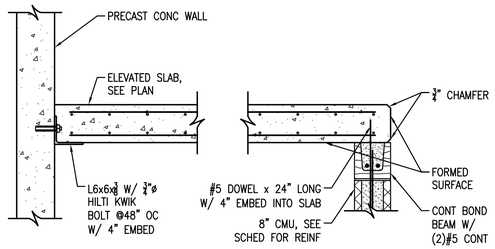

2 / 5.A–S.2 SECTION — AT ELEVATED CONCRETE SLAB — 3/4"=2'–0"

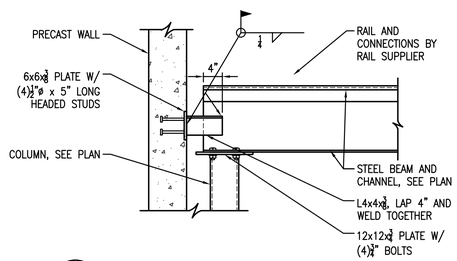

3 / 5.A–S.2 SECTION — 3/4"=1'–0"

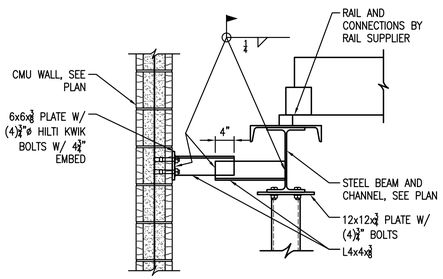

4 / 5.A–S.2 SECTION — 3/4"=1'–0"

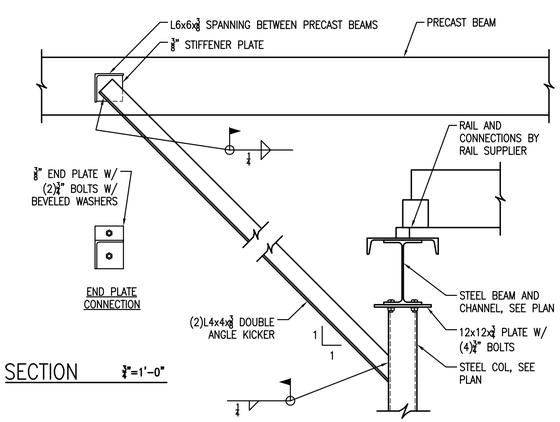

5 / 5.A–S.2 SECTION — 3/4"=1'–0"

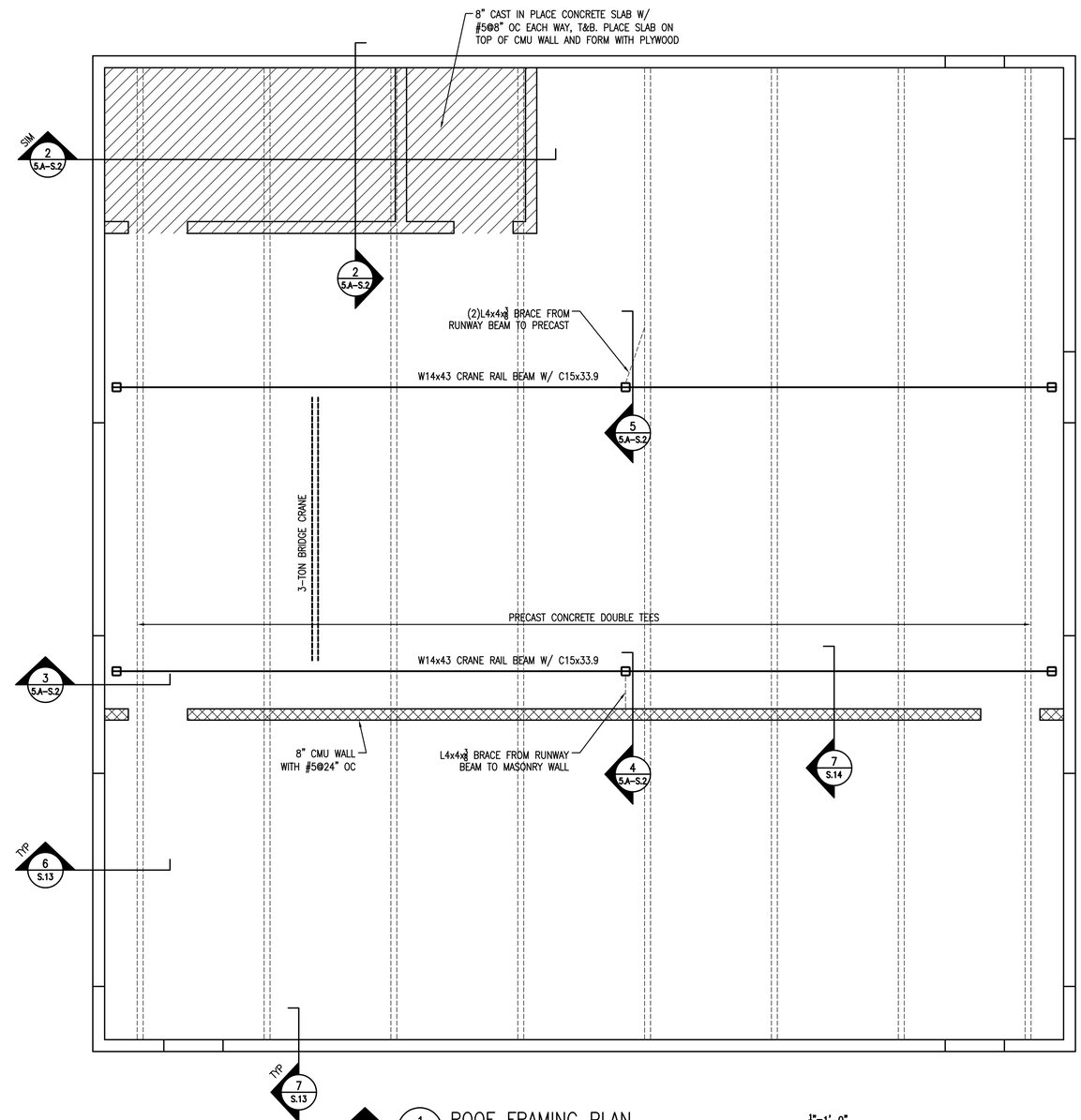

PLANT NORTH — 1 / 5.A–S.2 ROOF FRAMING PLAN — 3/4"=1'–0"

NOTES:
1. FOR GENERAL NOTES AND ABBREVIATIONS, SEE S.0.
2. COORDINATE ANY ROOF OPENINGS IN PRECAST WITH ARCHITECTS DRAWINGS.
3. SEE S.13 FOR TYPICAL PRECAST DETAILS.
4. ALL STEEL EXCEPT FOR BRIDGE CRANE SUPPORTING BEAMS AND COLUMNS TO BE GALVANIZED.

WK DICKSON
community infrastructure consultants
616 COLONNADE DRIVE
CHARLOTTE, NC 28205
(t)704-334-5348
(f)704-334-0078
WWW.WKDICKSON.COM
NC LICENSE NO.F-0374

NORTH CAROLINA PROFESSIONAL SEAL 024096 ENGINEER MICHAEL A. GARDINER 01/20/2020
PROFESSIONAL SEAL

STEWART
101 N TRYON ST SUITE 1400
CHARLOTTE, NC 28202
T 704.334.7925
FIRM LICENSE #: C-1051
www.stewartinc.com
PROJECT #: R170042

REVISION RECORD

NO.	DATE	DESCRIPTION	BY
	10/09/18	Issue for Owner and NCDEQ Review	

FINAL DESIGN - NOT RELEASED FOR CONSTRUCTION

PROJECT NAME: KILLIAN CREEK WWTP PHASE 3 UPGRADE

DRAWING TITLE: SLUDGE DEWATERING BUILDING ROOF FRAMING PLAN

PROJ. MGR.:	MAG
DESIGN BY:	BK
DRAWN BY:	DJB
PROJ. DATE:	OCT. 09, 2018

DRAWING NUMBER: 5.A-S.2

WKD PROJ. NO.: 20170294.00.CL

COPYRIGHT © W.K. DICKSON & CO., INC. ALL RIGHTS RESERVED. REPRODUCTION OR USE OF THE CONTENTS OF THIS DOCUMENT, ADDITIONS OR REDITIONS TO THIS DOCUMENT, IN ANY FORM OR BY ANY MEANS WHATSOEVER, WITHOUT THE EXPRESSED WRITTEN CONSENT OF W.K. DICKSON & CO., INC., IS PROHIBITED. NO COPIES, EITHER TEMPORARY OR PERMANENT, IN ANY FORM OR BY ANY MEANS, ELECTRONIC OR MECHANICAL, TO BE MADE. NO COPIES HAVE BEEN MADE OR AUTHORIZED.

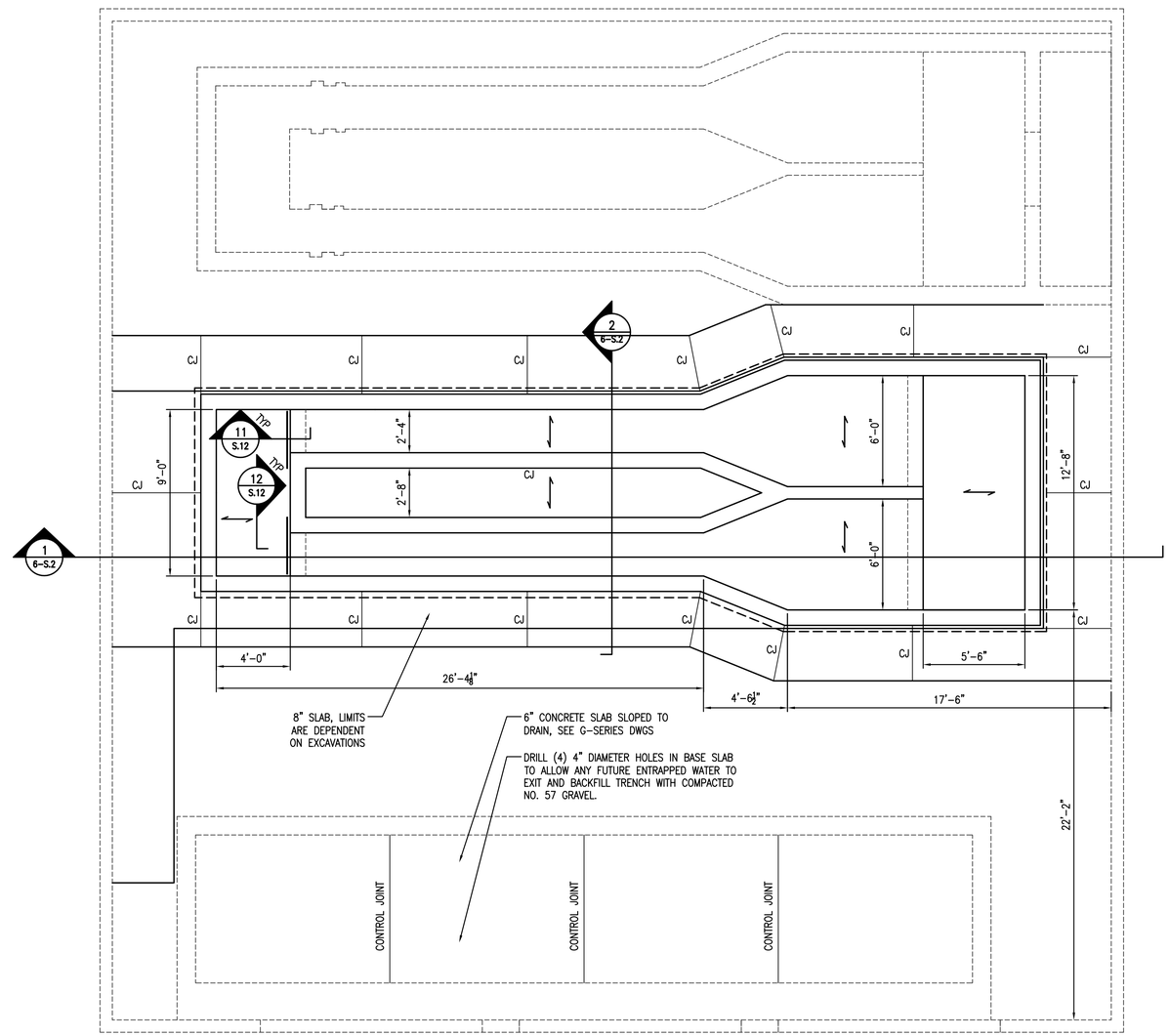

PLANT NORTH

1 / 6-S.1 FOUNDATION PLAN ¼"=1'-0"

NOTES:
1. FOR GENERAL NOTES AND ABBREVIATIONS, SEE S.0.
2. REFERENCE ELEVATION 0'-0" EQUAL TO FINISH FLOOR ELEVATION 679.50 AS NOTED ON CIVIL DRAWINGS.
3. ⟷ INDICATES BAR GRATING SPAN. ALL BAR GRATING SHALL BE 2" x 3/16" ALUMINUM BAR GRATING UNLESS NOTED OTHERWISE. ANCHOR TO SUPPORTS PER MANUFACTURER'S REQUIREMENTS.
4. SEE G-SERIES DRAWINGS FOR UV SLAB STEP ELEVATIONS AS THEY VARY AS WELL AS ADDITIONAL DIMENSIONS AND OTHER INFORMATION.
5. "CJ" INDICATES SLAB CONTROL JOINT, SEE S-10.

WK DICKSON
community infrastructure consultants
616 COLONNADE DRIVE
CHARLOTTE, NC 28205
(t)704-334-5348
(f)704-334-0078
WWW.WKDICKSON.COM
NC LICENSE NO.F-0374

NORTH CAROLINA PROFESSIONAL SEAL 024096 ENGINEER MICHAEL A. GARDINER
01/20/2020
PROFESSIONAL SEAL

STEWART
101 N TRYON ST SUITE 1400
CHARLOTTE, NC 28202
T:704.334.7925
FIRM LICENSE #: C-1051
www.stewartINC.com
PROJECT #: R17042

REVISION RECORD

NO.	DATE	DESCRIPTION	BY
	10/09/18	Issue for Owner and NCDEQ Review	

PROJECT NAME:
KILLIAN CREEK WWTP PHASE 3 UPGRADE

DRAWING TITLE:
EFFLUENT UV BUILDING (FORMERLY EFFLUENT FILTER/UV BUILDING) PLAN

PROJ. MGR.:	MAG
DESIGN BY:	BK
DRAWN BY:	DJB
PROJ. DATE:	OCT. 09, 2018

DRAWING NUMBER:
6-S.1

WKD PROJ. NO.:
20170294.00.CL

FINAL DESIGN - NOT RELEASED FOR CONSTRUCTION

FILE PATH:C:\Projects\JMC\20170294\00.CL - Killian Creek WWTP Ph 3 Upgrade Const\CAD\Plan Set\TBC\01\20170294_C_01P1_Foundation Layout.dwg, P:\Projects\JMC\20170294\00.CL - Killian Creek WWTP Ph 3 Upgrade Const\CAD\Plan Set\TBC\01\20170294_C_01P1_Foundation Layout.dwg, 1/8/2019 10:52:24 AM

COPYRIGHT © W.K. DICKSON & CO., INC. ALL RIGHTS RESERVED. REPRODUCTION OR USE OF THE CONTENTS OF THIS DOCUMENT, ADDITIONS OR ALTERATIONS TO THIS DOCUMENT, IN ANY FORM OR BY ANY MEANS, WITHOUT WRITTEN PERMISSION FROM W.K. DICKSON & CO., INC., IS PROHIBITED. "AS BUILT" PLANS OR OTHER DOCUMENTS BASED ON THIS DOCUMENT INCLUDING BUT NOT LIMITED TO SHOP DRAWINGS, SUBMITTALS, RFI'S, ETC. MUST INCLUDE THIS COPYRIGHT NOTICE.

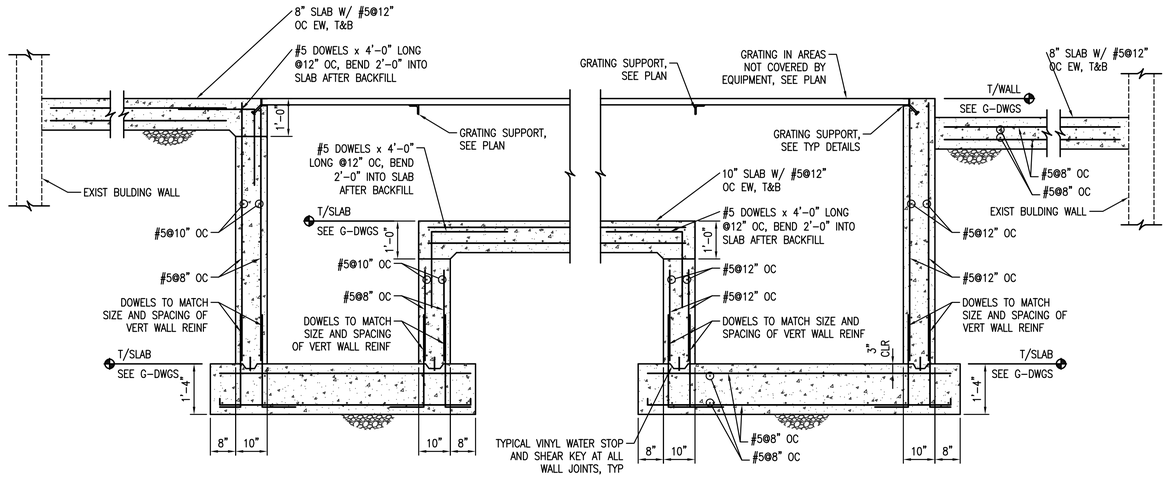

1 / 6-S.2 SECTION ½"=1'-0"

EFFLUENT UV BUILDING

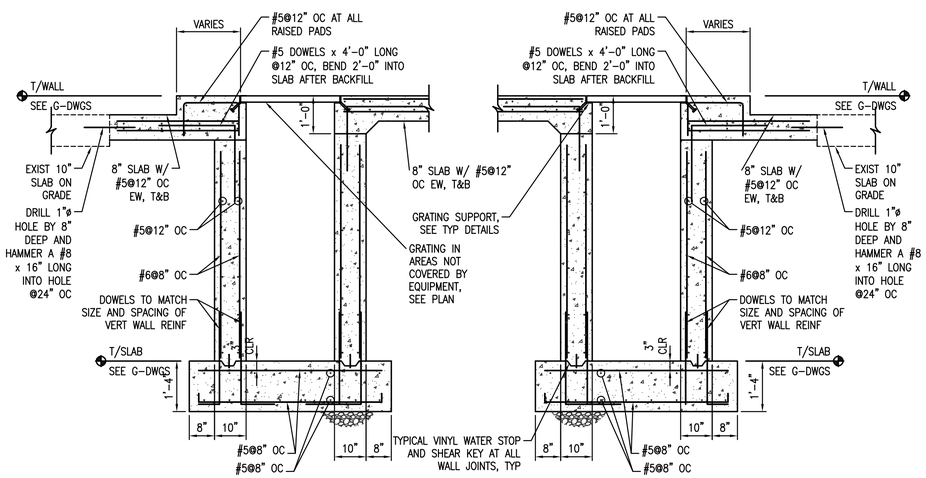

2 / 6-S.2 SECTION ½"=1'-0"

EFFLUENT UV BUILDING

WK DICKSON
community infrastructure consultants

616 COLONNADE DRIVE
CHARLOTTE, NC 28205
(t)704-334-5348
(f)704-334-0078

WWW.WKDICKSON.COM

NC LICENSE NO.F-0374

NORTH CAROLINA PROFESSIONAL SEAL 024096 ENGINEER MICHAEL A. GARDINER 01/20/2020

PROFESSIONAL SEAL

STEWART

101 N TRYON ST SUITE 1400
CHARLOTTE, NC 28202
T:704.334.7925

FIRM LICENSE #: C-1051
www.stewartBIC.com
PROJECT #: 8170042

REVISION RECORD

NO.	DATE	DESCRIPTION	BY
	10/09/18	Issue for Owner and NCDEQ Review	

PROJECT NAME:

KILLIAN CREEK WWTP PHASE 3 UPGRADE

DRAWING TITLE:

EFFLUENT UV BUILDING (FORMERLY EFFLUENT FILTER/UV BUILDING) PLAN

FINAL DESIGN - NOT RELEASED FOR CONSTRUCTION

PROJ. MGR.:	MAG
DESIGN BY:	BK
DRAWN BY:	DJB
PROJ. DATE:	OCT. 09, 2018

DRAWING NUMBER:

6-S.2

WKD PROJ. NO.:

20170294.00.CL

FILE PATH:C:\Projects\JMC\20170294\00.CL - Killian Creek WWTP Ph 3 Upgrade Const\CADD\Plan Set\TBC\6170294_D_SHT_Header\wordpagesetup.dwg,Projects\JMC\20170294\00.CL - Killian Creek WWTP Ph 3 Upgrade Const\CADD\Plan Set\TBC\6170294_D_SHT_Header\wordpagesetup.dwg, NORMAL2D, 1:1=29.9 10/05/2018 9:00:20 AM

COPYRIGHT © W.K. DICKSON & CO., INC. ALL RIGHTS RESERVED. REPRODUCTION OR USE OF THE CONTENTS OF THIS DOCUMENT, ADDITIONS OR REDUCTIONS TO THIS DOCUMENT, IN WHOLE OR IN PART, WITHOUT WRITTEN CONSENT OF W.K. DICKSON & CO., INC., IS PROHIBITED. THE CONTENTS OF THIS DOCUMENT MAY NOT BE DISTRIBUTED TO THIRD PARTIES. ALL CODES, STANDARDS, AND REGULATIONS REFERRED TO HEREIN, IN WHOLE OR IN PART, BECOME PART OF THIS DOCUMENT BY REFERENCE.

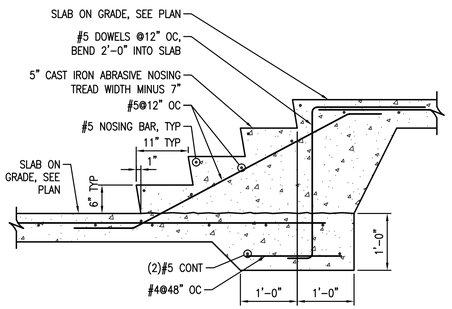

5 / 7.A-S.1 SECTION AT STEPS ¾"=2'-0"

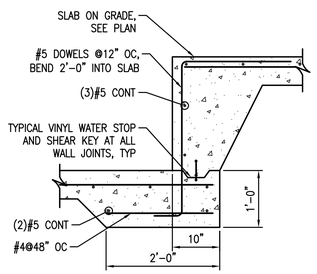

6 / 7.A-S.1 SECTION AT SLAB STEP ¾"=2'-0"

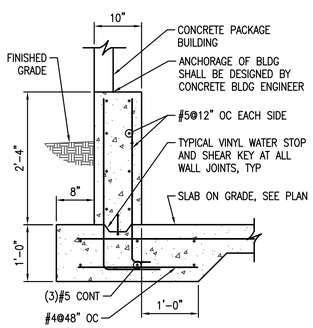

7 / 7.A-S.1 SECTION AT EXTERIOR WALL ¾"=2'-0"

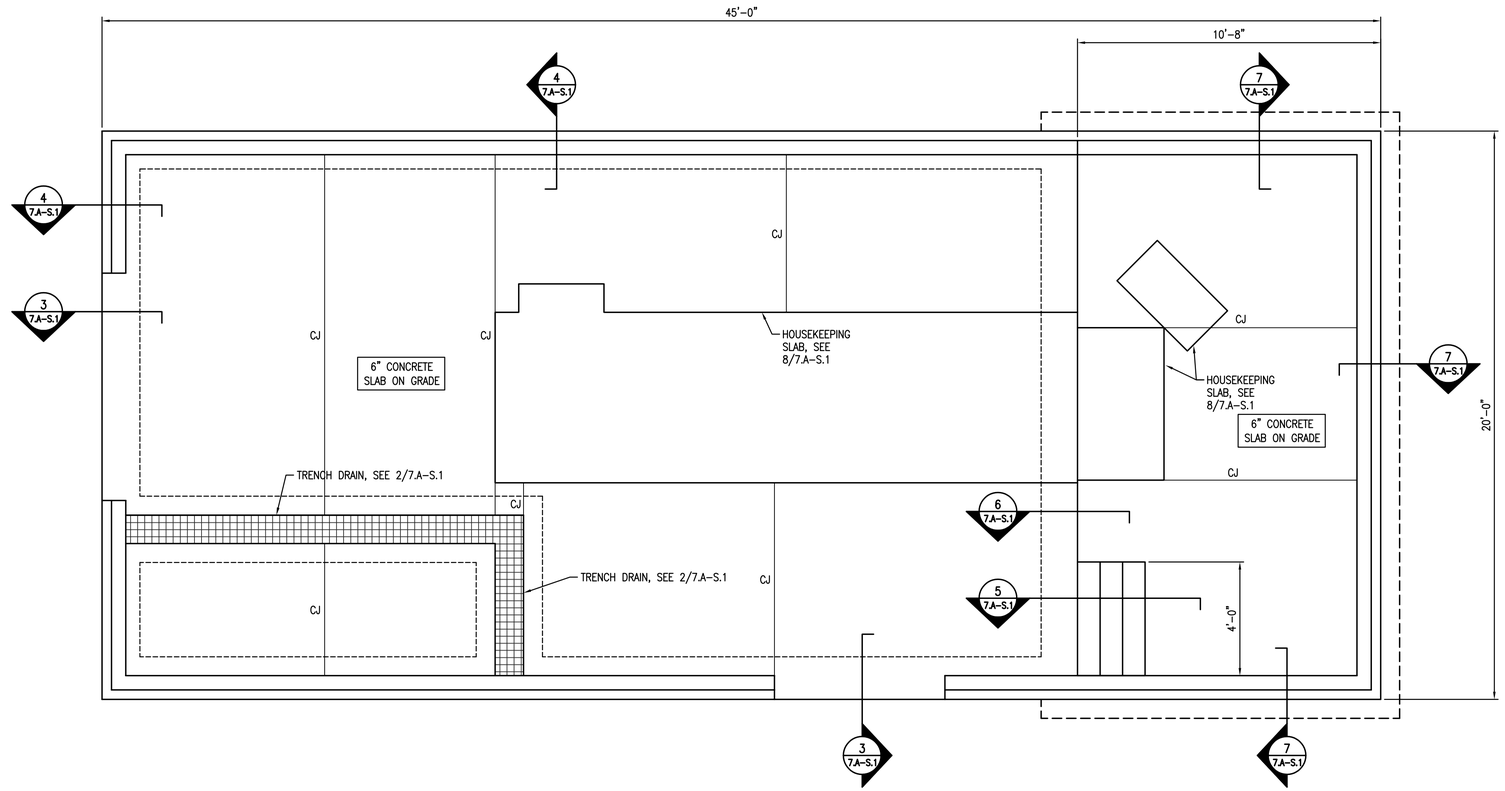

PLANT NORTH

1 / 7.A-S.1 FOUNDATION PLAN ⅛"=1'-0"

NOTES:
1. FOR GENERAL NOTES AND ABBREVIATIONS, SEE S.0.
2. REFERENCE ELEVATION 0'-0" EQUAL TO FINISH FLOOR ELEVATION 700.50 AS NOTED ON CIVIL DRAWINGS.
3. SEE G-SERIES DRAWINGS FOR SLAB STEP ELEVATIONS AND TRENCH DRAIN SLOPES AS THEY VARY AS WELL AS ADDITIONAL DIMENSIONS AND OTHER INFORMATION.
4. BUILDING TO BE A PRECAST CONCRETE PACKAGE BUILDING, SEE SPECIFICATIONS.
5. "CJ" INDICATES SLAB CONTROL JOINT, SEE S.10.

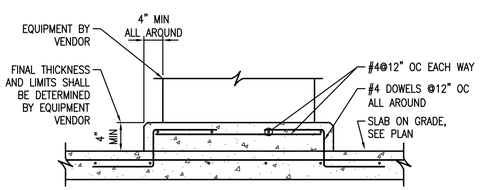

8 / 7.A-S.1 SECTION HOUSEKEEPING SLAB ¾"=2'-0"

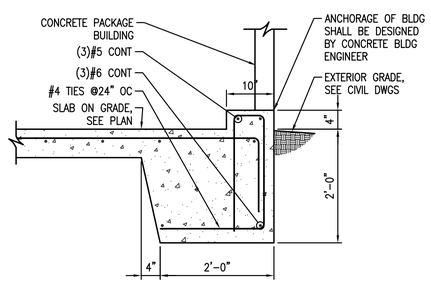

4 / 7.A-S.1 SECTION AT EXTERIOR WALL ¾"=2'-0"

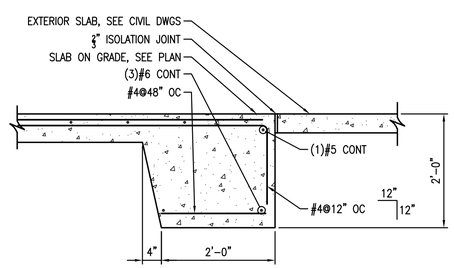

3 / 7.A-S.1 SECTION AT DOOR OPENINGS ¾"=2'-0"

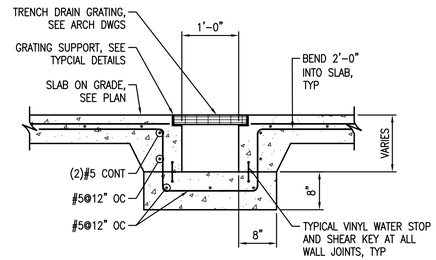

2 / 7.A-S.1 SECTION AT TRENCH DRAIN ¾"=2'-0"

FINAL DESIGN - NOT RELEASED FOR CONSTRUCTION

WK DICKSON
community infrastructure consultants
616 COLONNADE DRIVE
CHARLOTTE, NC 28205
(t)704-334-5348
(f)704-334-0078
WWW.WKDICKSON.COM
NC LICENSE NO.F-0374

NORTH CAROLINA PROFESSIONAL SEAL 024096 ENGINEER MICHAEL A. GARDINER
01/20/2020
PROFESSIONAL SEAL

STEWART
101 N TRYON ST SUITE 1400
CHARLOTTE, NC 28202
T 704.334.7920
FIRM LICENSE #: C-1051
www.stewartinc.com
PROJECT #: 817042

REVISION RECORD

NO.	DATE	DESCRIPTION	BY
	10/09/18	Issue for Owner and NCDEQ Review	

PROJECT NAME: KILLIAN CREEK WWTP PHASE 3 UPGRADE

DRAWING TITLE: ROTARY DRUM THICKENER BUILDING FOUNDATION PLAN AND SECTIONS

PROJ. MGR.:	MAG
DESIGN BY:	BK
DRAWN BY:	DJB
PROJ. DATE:	OCT. 09, 2018

DRAWING NUMBER: 7.A-S.1

WKD PROJ. NO.: 20170294.00.CL

COPYRIGHT © W.K. DICKSON & CO., INC. ALL RIGHTS RESERVED. REPRODUCTION OR USE OF THE CONTENTS OF THIS DOCUMENT, ADDITIONS OR REDITIONS TO THIS DOCUMENT, IN ANY FORM OR BY ANY MEANS WHATSOEVER, WITHOUT THE PRIOR WRITTEN PERMISSION OF W.K. DICKSON & CO., INC., IS PROHIBITED. NO COPIES, EITHER TO THE PUBLIC OR PRIVATE, MAY BE MADE UNTIL AFTER THE OWNER OF W.K. DICKSON & CO., INC. IS DEEMED TO HAVE ACCEPTED THE WORK.

PLANT NORTH

2
7.A-S.2

ROOF FRAMING PLAN

1/4"=1'-0"

NOTES:
1. FOR GENERAL NOTES AND ABBREVIATIONS, SEE S.0.
2. COORDINATE ANY ROOF OPENINGS IN PRECAST WITH ARCHITECTS DRAWINGS.

WK DICKSON
community infrastructure consultants

616 COLONNADE DRIVE
CHARLOTTE, NC 28205
(t)704-334-5348
(f)704-334-0078

WWW.WKDICKSON.COM

NC LICENSE NO.F-0374

NORTH CAROLINA PROFESSIONAL SEAL 024096 ENGINEER MICHAEL A. GARDINER
01/20/2020
PROFESSIONAL SEAL

STEWART
101 N TRYON ST SUITE 1400
CHARLOTTE, NC 28202
T:704.334.7925
FIRM LICENSE #: C-1051
www.stewartINC.com
PROJECT #: R170042

REVISION RECORD

NO.	DATE	DESCRIPTION	BY
	10/09/18	Issue for Owner and NCDEQ Review	

PROJECT NAME:
KILLIAN CREEK WWTP PHASE 3 UPGRADE

DRAWING TITLE:
ROTARY DRUM THICKENER BUILDING ROOF FRAMING PLAN

PROJ. MGR.:	MAG
DESIGN BY:	BK
DRAWN BY:	DJB
PROJ. DATE:	OCT. 09, 2018

DRAWING NUMBER:
7.A-S.2

WKD PROJ. NO.:
20170294.00.CL

FINAL DESIGN - NOT RELEASED FOR CONSTRUCTION

COPYRIGHT © W.K. DICKSON & CO., INC. ALL RIGHTS RESERVED. REPRODUCTION OR USE OF THE CONTENTS OF THIS DOCUMENT, ADDITIONS OR ALTERATIONS TO THIS DOCUMENT, OR DISCLOSURE OF THIS DOCUMENT TO ANY OTHER PERSON OR ENTITY WITHOUT WRITTEN CONSENT OF W.K. DICKSON & CO., INC., IS PROHIBITED. TOTAL COPIES: 10, PLANT: 1, DATE: 10/09/2018 10:05:29 AM

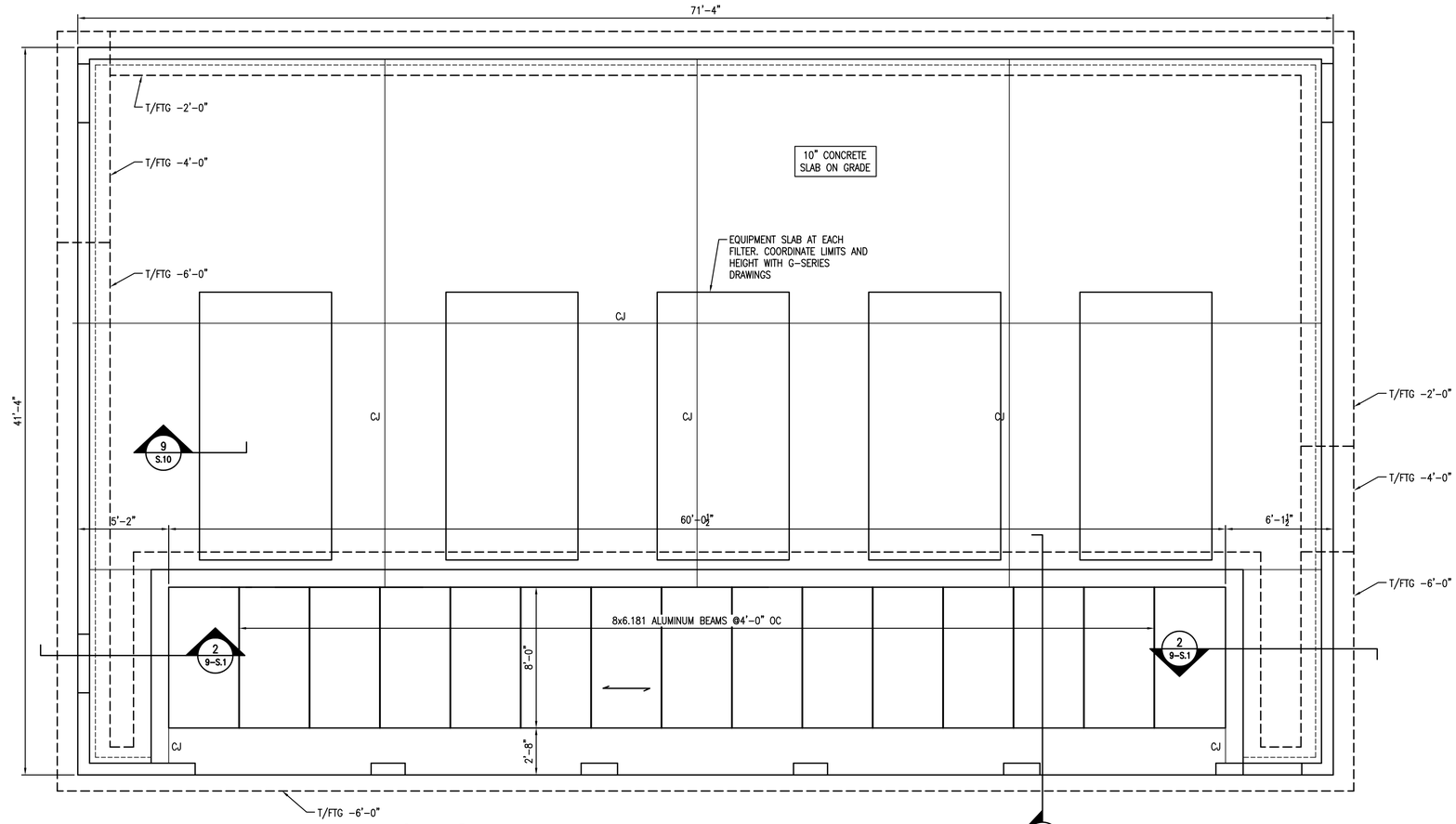

1 9-S.1 EFFLUENT FILTER BUILDING FOUNDATION PLAN ¼"=1'-0"

NOTES:

1. FOR GENERAL NOTES AND ABBREVIATIONS, SEE S.0.
2. REFERENCE ELEVATION 0'-0" EQUAL TO FINISH FLOOR ELEVATION 680.50 AS NOTED ON CIVIL DRAWINGS.
3. SEE G-SERIES DRAWINGS FOR SLAB STEP ELEVATIONS AND TRENCH DRAIN SLOPES AS THEY VARY AS WELL AS ADDITIONAL DIMENSIONS AND OTHER INFORMATION.
4. "T/FTG" INDICATES DEPTH OF FOOTING RELATIVE TO FINISH FLOOR ELEVATION.
5. ⟷ INDICATES BAR GRATING SPAN DIRECTION. ALL BAR GRATING SHALL BE 2" x 3/16" x 5/16" BEARING BARS OC WITH TIE BARS @4" OC ALUMINUM BAR GRATING UNLESS NOTED OTHERWISE. ANCHOR TO SUPPORTS PER MANUFACTURER'S REQUIREMENTS.
6. "CJ" INDICATES SLAB CONTROL JOINT, SEE S.10.

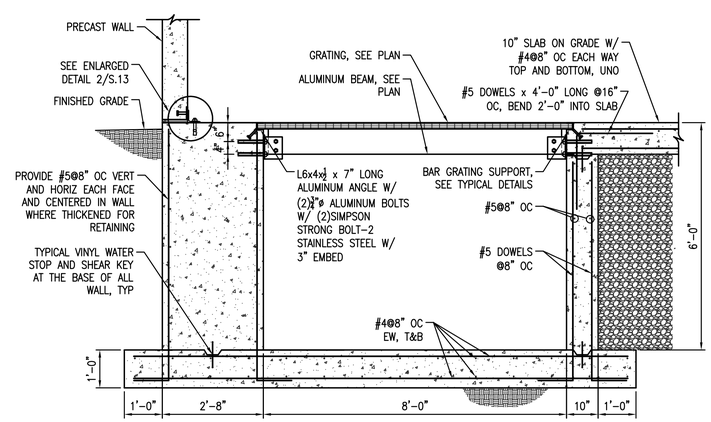

3 9-S.1 SECTION ½"=1'-0"

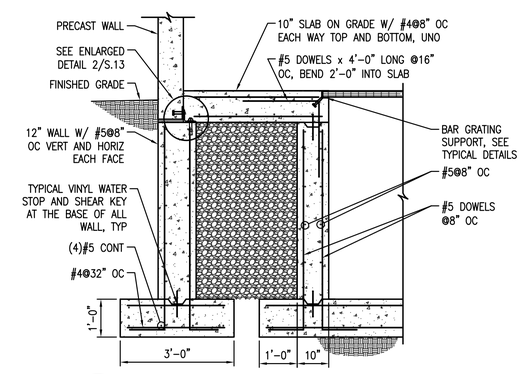

2 9-S.1 SECTION ½"=1'-0"

WK DICKSON
community infrastructure consultants
616 COLONNADE DRIVE
CHARLOTTE, NC 28205
(t)704-334-5348
(f)704-334-0078
WWW.WKDICKSON.COM
NC LICENSE NO.F-0374

NORTH CAROLINA PROFESSIONAL SEAL 024096 ENGINEER MICHAEL A. GARDINER 01/20/2020
PROFESSIONAL SEAL

STEWART
101 N TRYON ST SUITE 1400
CHARLOTTE, NC 28202
T:704.334.7925
FIRM LICENSE #: C-1051
www.stewartinc.com
PROJECT #: 8170042

REVISION RECORD

NO.	DATE	DESCRIPTION	BY
	10/09/18	Issue for Owner and NCDEQ Review	

FINAL DESIGN - NOT RELEASED FOR CONSTRUCTION

PROJECT NAME: KILLIAN CREEK WWTP PHASE 3 UPGRADE

DRAWING TITLE: EFFLUENT BUILDING PLAN AND DETAILS

PROJ. MGR.:	MAG
DESIGN BY:	BK
DRAWN BY:	DJB
PROJ. DATE:	OCT. 09, 2018

DRAWING NUMBER: 9-S.1

WKD PROJ. NO.: 20170294.00.CL

COPYRIGHT © WK DICKSON & CO., INC. ALL RIGHTS RESERVED. REPRODUCTION OR USE OF THE CONTENTS OF THIS DOCUMENT, ADDITIONS OR REDUCTIONS TO THIS DOCUMENT, OR PARTS THEREOF, WITHOUT WRITTEN CONSENT OF WK DICKSON & CO., INC., IS STRICTLY PROHIBITED. NO COPIES, EXCEPTING OFFICIAL REVIEW COPIES, WILL BE MADE UNLESS WITH CONSENT. RECIPIENTS OF WK DICKSON & CO., INC. DRAWINGS & DOCUMENTS, BY RECEIPT HEREOF, AGREE TO BE BOUND BY THE FOREGOING STATEMENT.

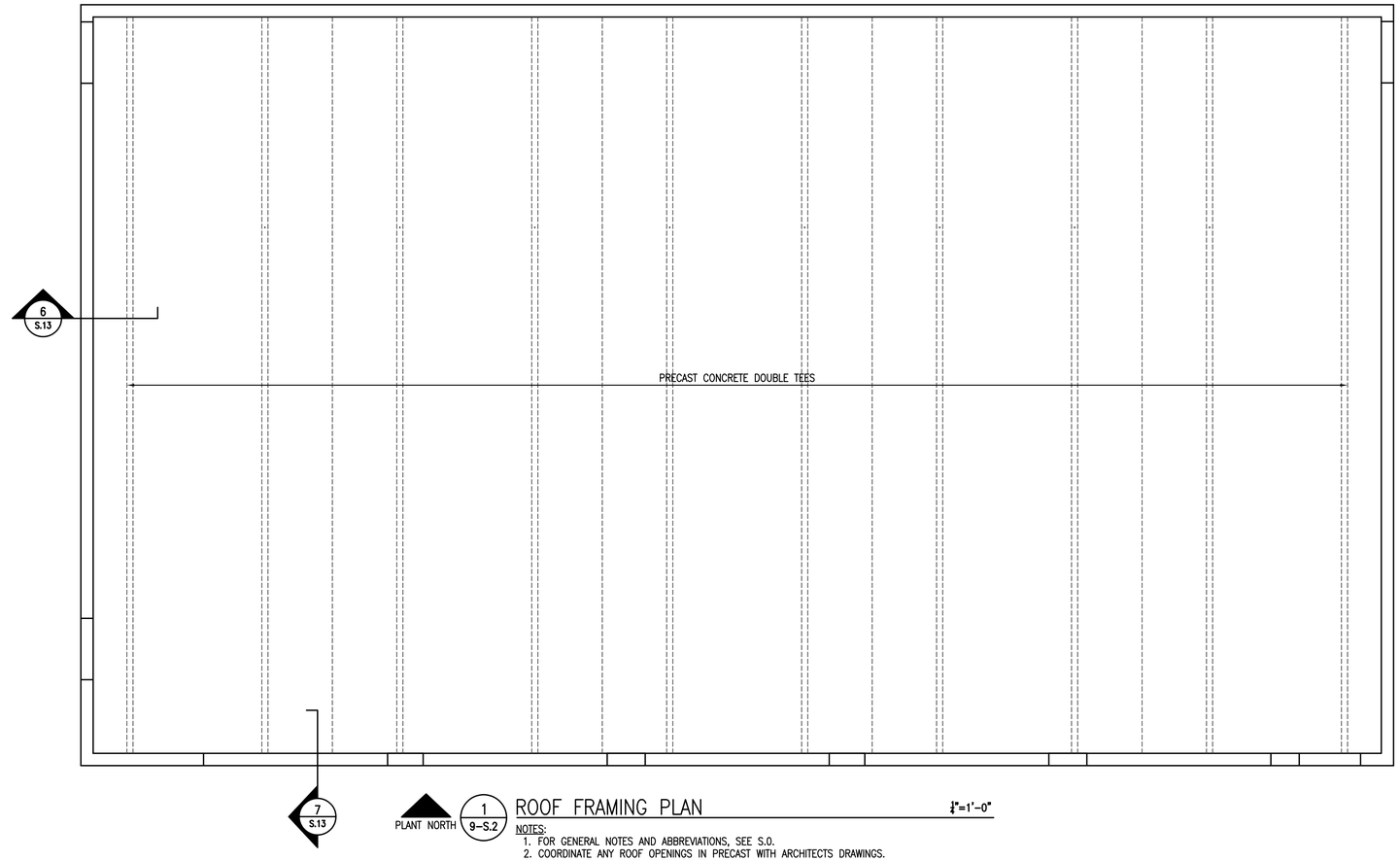

1 / 9-S.2 ROOF FRAMING PLAN 1/4"=1'-0"

NOTES:
1. FOR GENERAL NOTES AND ABBREVIATIONS, SEE S.0.
2. COORDINATE ANY ROOF OPENINGS IN PRECAST WITH ARCHITECTS DRAWINGS.
3. SEE S.13 FOR TYPICAL PRECAST DETAILS.

WK DICKSON
community infrastructure consultants
616 COLONNADE DRIVE
CHARLOTTE, NC 28205
(t)704-334-5348
(f)704-334-0078
WWW.WKDICKSON.COM
NC LICENSE NO.F-0374

NORTH CAROLINA PROFESSIONAL SEAL 024096 ENGINEER MICHAEL A. GARDINER
01/20/2020
PROFESSIONAL SEAL

STEWART
101 N TRYON ST SUITE 1400
CHARLOTTE, NC 28202
T:704.334.7925
FIRM LICENSE #: C-1051
www.stewartINC.com
PROJECT #: R170042

REVISION RECORD

NO.	DATE	DESCRIPTION	BY
	10/09/18	Issue for Owner and NCDEQ Review	

PROJECT NAME: KILLIAN CREEK WWTP PHASE 3 UPGRADE

DRAWING TITLE: EFFLUENT BUILDING PLAN AND DETAILS

PROJ. MGR.:	MAG
DESIGN BY:	BK
DRAWN BY:	DJB
PROJ. DATE:	OCT. 09, 2018

DRAWING NUMBER: 9-S.2

WKD PROJ. NO.: 20170294.00.CL

FINAL DESIGN - NOT RELEASED FOR CONSTRUCTION

FILE PATH:Z:\Projects\MCC\20170294\CL - Killian Creek WWTP Ph 3 Upgrade Const\CADD\Plan Set\TBD\20170294_D_SHT_Header\wk-header-portrait.dwg, PROPERTIES:MCC,20170294\CL - Killian Creek WWTP Ph 3 Upgrade Const\CADD\Plan Set\TBD\20170294_D_SHT_Header\wk-header-portrait.dwg, NCDENR\CCO, 3/14/2018 10:02:29 AM

COPYRIGHT © W.K. DICKSON & CO., INC. ALL RIGHTS RESERVED. REPRODUCTION OR USE OF THE CONTENTS OF THIS DOCUMENT, ADDITIONS OR REDITIONS TO THE CONTENTS OF THIS DOCUMENT, OR DERIVATIVES THEREOF, IN WHOLE OR IN PART, WITHOUT PRIOR WRITTEN CONSENT OF W.K. DICKSON & CO., INC., IS PROHIBITED. TRUE COPIES OF THIS DOCUMENT, ADDITIONS OR REDITIONS TO THE CONTENTS OF THIS DOCUMENT, OR DERIVATIVES THEREOF, MAY BE MADE BY RECIPIENTS OF WK DICKSON & CO., INC., IF THEY INCLUDE THIS NOTICE.

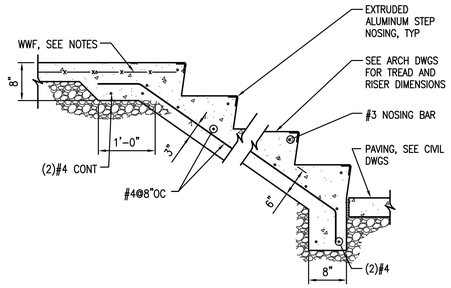

10 / S.10 SECTION ¾"=1'-0"
STEPS ON GRADE WITH CONCRETE WALLS

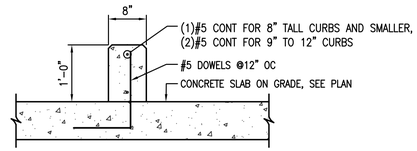

7 / S.10 SECTION ¾"=1'-0"
TYPICAL CURB DETAIL

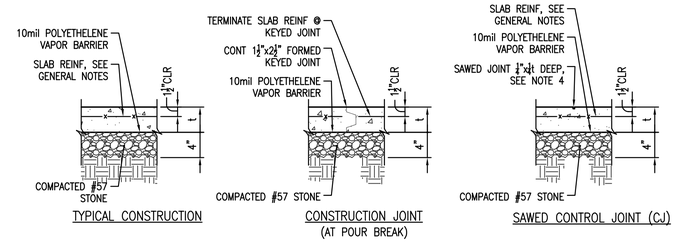

1 / S.10 DETAIL NO SCALE
TYPICAL SLAB-ON-GRADE
NOTES:
1. ' t ' DENOTES SLAB THICKNESS. SEE PLANS.
2. LOCATION OF SLAB-ON-GRADE CONSTRUCTION JOINTS SHALL BE DETERMINED BY THE CONTRACTOR. JOINT LOCATIONS SHALL BE SUBMITTED TO THE ENGINEER FOR APPROVAL PRIOR TO CONSTRUCTION.
3. SEE PLAN FOR LOCATION OF CONTROL JOINTS. WHERE NOT SHOWN ON PLAN, CONTACT THE ENGINEER.
4. SAW CUT JOINT WITHIN 8 HOURS OF SLAB POUR.

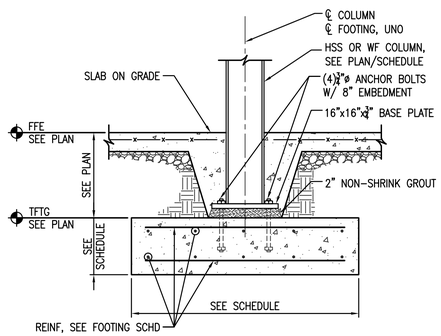

11 / S.10 DETAIL NO SCALE
TYPICAL COLUMN FOOTING AT STEEL COLUMN
NOTES:
1. COAT BASE PLATE, ANCHOR BOLTS, AND COLUMN BELOW SLAB ON GRADE WITH AN APPROVED ASPHALT PAINT.
2. GROUT BASE PLATE BEFORE ELEVATED CONCRETE SLABS ARE POURED.

FOOTING SCHEDULE

MARK			F5	F6	F7	F8	F9	F10	F11	F12	F13	F14	F15
FOOTING	SIZE	W	5'-0"	6'-0"	7'-0"	8'-0"	9'-0"	10'-0"	11'-0"	12'-0"	13'-0"	14'-0"	15'-0"
		L	5'-0"	6'-0"	7'-0"	8'-0"	9'-0"	10'-0"	11'-0"	12'-0"	13'-0"	14'-0"	15'-0"
	DEPTH		1'-8"	2'-2"	2'-8"	3'-0"	3'-3"	2'-3"	2'-4"	2'-6"	3'-0"	3'-3"	3'-6"
	STEEL EA WAY	TOP	NA	NA	NA	NA	NA	NA	NA	NA	NA	NA	NA
		BOTT	(11)#6	(12)#7	(15)#7	(15)#8	(16)#8	(10)#8	(13)#8	(13)#8	(15)#9	(13)#9	(22)#8

5 / S.10 SCHEDULE NO SCALE

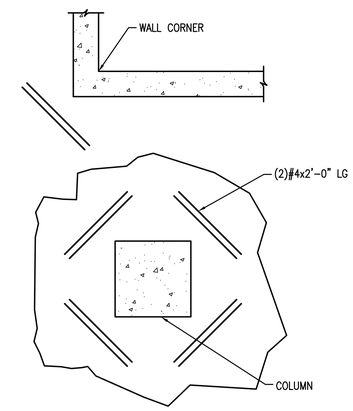

2 / S.10 PLAN DETAILS ½"=1'-0"
TYP AT COLUMNS AND WALL CORNERS

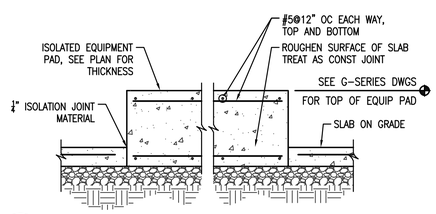

12 / S.10 DETAIL ¾"=1'-0"
ISOLATED CONCRETE EQUIPMENT PAD
NOTE:
1. THE EXACT SIZE, SHAPE, AND LOCATION OF EQUIPMENT (HOUSEKEEPING) PAD(S) SHALL BE DETERMINED BY THE CONTRACTOR AFTER APPROVAL OF SHOP DRAWINGS FOR EQUIPMENT. ANCHOR BOLTS WHERE REQUIRED SHALL BE SIZED AND LOCATED ACCORDING TO MANUFACTURER'S REQUIREMENTS.
2. PROVIDE ISOLATED PADS WHERE EQUIPMENT VENDOR REQUIRES ISOLATED PADS.

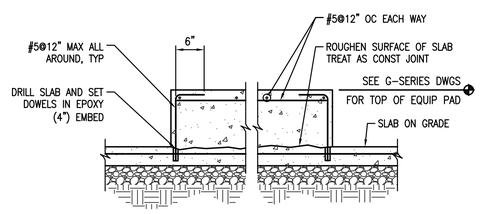

9 / S.10 DETAIL ¾"=1'-0"
NON-ISOLATED CONCRETE EQUIPMENT PAD
NOTE:
1. THE EXACT SIZE, SHAPE, AND LOCATION OF EQUIPMENT (HOUSEKEEPING) PAD(S) SHALL BE DETERMINED BY THE CONTRACTOR AFTER APPROVAL OF SHOP DRAWINGS FOR EQUIPMENT. ANCHOR BOLTS WHERE REQUIRED SHALL BE SIZED AND LOCATED ACCORDING TO MANUFACTURER'S REQUIREMENTS.
2. PROVIDE NON-ISOLATED PAD WHERE EQUIPMENT VENDOR DOES NOT REQUIRE ISOLATION.

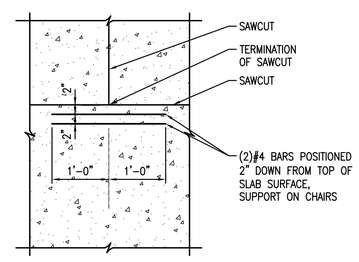

6 / S.10 DETAILS ¾"=1'-0"
TYPICAL WHEN CONTRACTION JOINT TERMINATES

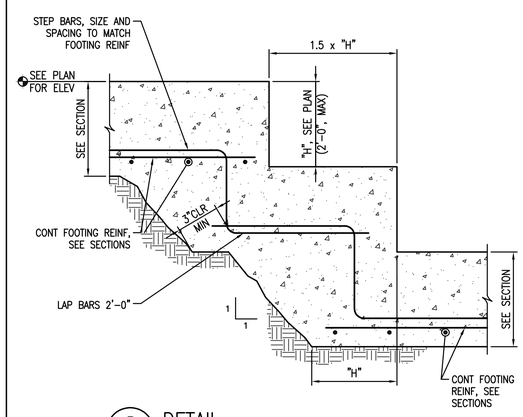

3 / S.10 DETAIL NO SCALE
TYPICAL STEP IN CONCRETE WALL FOOTING

WK DICKSON
community infrastructure consultants
616 COLONNADE DRIVE
CHARLOTTE, NC 28205
(t)704-334-5348
(f)704-334-0078
WWW.WKDICKSON.COM
NC LICENSE NO.F-0374

NORTH CAROLINA PROFESSIONAL SEAL 024096 ENGINEER MICHAEL A. GARDINE
01/20/2020
PROFESSIONAL SEAL

STEWART
101 N TRYON ST SUITE 1400
CHARLOTTE, NC 28202
T 704.334.7925
FIRM LICENSE #: C-1051
www.stewartfirm.com
PROJECT #: R170042

REVISION RECORD

NO.	DATE	DESCRIPTION	BY
	10/09/18	Issue for Owner and NCDEQ Review	

FINAL DESIGN - NOT RELEASED FOR CONSTRUCTION

PROJECT NAME: KILLIAN CREEK WWTP PHASE 3 UPGRADE

DRAWING TITLE: GENERAL FOUNDATION DETAILS

PROJ. MGR.:	MAG
DESIGN BY:	BK
DRAWN BY:	DJB
PROJ. DATE:	OCT. 09, 2018

DRAWING NUMBER: S.10

WKD PROJ. NO.: 20170294.00.CL

COPYRIGHT © WK DICKSON & CO., INC. ALL RIGHTS RESERVED. REPRODUCTION OR USE OF THE CONTENTS OF THIS DOCUMENT, ADDITIONS OR REDITIONS TO THIS DOCUMENT, IN ANY FORM OR BY ANY MEANS WHATSOEVER, WITHOUT THE EXPRESS PERMISSION OF W.K. DICKSON & CO., INC., IS PROHIBITED. NO COPIES, EXCEPTING TO THIRD PARTIES WITH WHOM W.K. DICKSON & CO., INC. HAS CONTRACTED, IS TO BE MADE. NO COPIES, EXCEPTING TO THIRD PARTIES WITH WHOM W.K. DICKSON & CO., INC. HAS CONTRACTED, IS TO BE MADE WITHOUT THIS NOTICE.

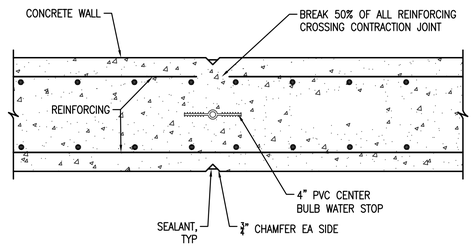

7 / S.11 VERTICAL SECTION 1½"=1'-0"
CONTRACTION JOINT WITH WATER STOP

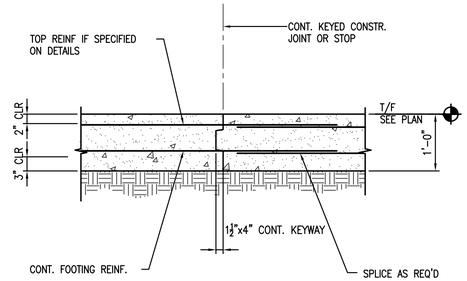

4 / S.11 TYPICAL FOOTING CONSTRUCTION JOINT ¾"=1'-0"

CONCRETE REINFORCING DOWEL EMBED				
BAR SIZE	LEG-DIM "L"	EMBEDMENT "D"		
		3 KSI	4 KSI	4.5 KSI
#3	6"	9"	7"	7"
#4	8"	11"	10"	9"
#5	10"	1'-2"	1'-0"	1'-0"
#6	1'-0"	1'-5"	1'-2"	1'-2"
#7	1'-2"	1'-7"	1'-5"	1'-4"
#8	1'-4"	1'-10"	1'-7"	1'-6"
#9	1'-7"	2'-1"	1'-9"	1'-9"
#10	1'-10"	2'-4"	2'-0"	1'-11"
#11	2'-0"	2'-7"	2'-3"	2'-2"

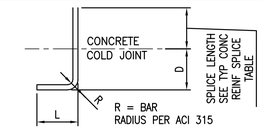

1 / S.11 CONC REINF DOWEL EMBED SCHED NTS

NOTES:
1. SIDE COVER ON BARS MUST BE GREATER THAN 2½". END COVER ON 90 DEGREE HOOKED BARS MUST BE GREATER THAN 2".
2. VALUES SHOWN ARE FOR NORMAL WEIGHT CONCRETE. FOR LIGHT WEIGHT CONCRETE, INCREASE THE "D" VALUES BY 30%.
3. FOR EPOXY COATED BARS, INCREASE THE "D" VALUE BY 20%.

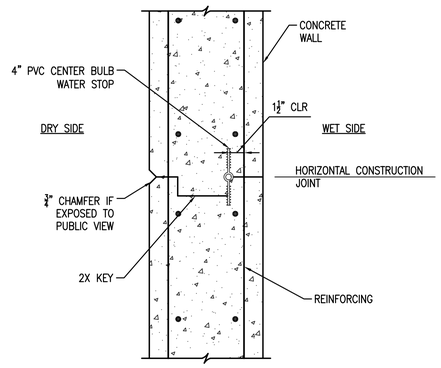

8 / S.11 SECTION 1½"=1'-0"
WATER STOP AT HORIZONTAL CONSTRUCTION JOINT

NOTES:
1. WET SIDE CAN BE TANK, CONTAINMENT STRUCTURES, OR WATER TABLE SOAKED SOIL.
2. DRY SIDE CAN BE INTERIOR SPACE OR SOIL OUTSIDE TANK OR CONTAINMENT STRUCTURE.

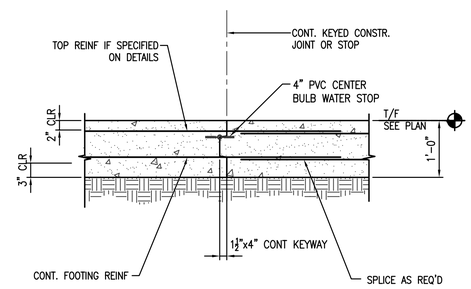

5 / S.11 TYPICAL BASE SLAB CONSTRUCTION JOINT ¾"=1'-0"

CONCRETE REINFORCING SPLICES			
BAR SIZE	F'c=3 KSI	F'c=4 KSI	F'c=4.5 KSI
#3	1'-10"	1'-7"	1'-6"
#4	2'-4"	2'-1"	2'-0"
#5	3'-0"	2'-7"	2'-6"
#6	3'-7"	3'-1"	2'-11"
#7	5'-2"	4'-6"	4'-3"
#8	5'-11"	5'-2"	4'-11"
#9	6'-6"	5'-10"	5'-6"
#10	7'-6"	6'-6"	6'-2"
#11	8'-4"	7'-3"	6'-10"

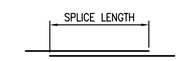

2 / S.11 CONCRETE REINFORCING SPLICE SCHEDULE NTS

NOTES:
1. APPLIES TO BOTTOM BARS ONLY (LESS THAN 12" OF FRESH CONCRETE BELOW BAR).
2. APPLIES WHERE THE CLEAR COVER IS GREATER THAN THE BAR DIAMETER.
3. WHEN MORE THAN 12" OF FRESH CONCRETE BELOW SPLICE, THEN INCREASE SPLICE TO 1.3 x SPLICE LENGTH.

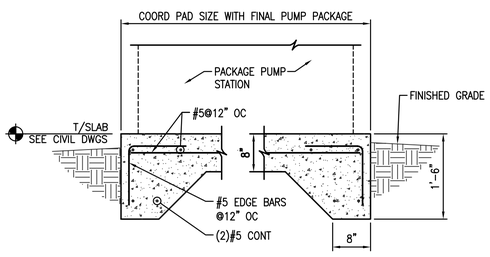

12 / S.11 SECTION ¾"=1'-0"
PACKAGE PUMP STATION FOUNDATION SLAB

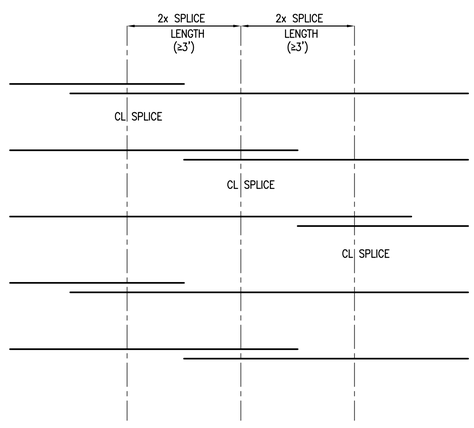

9 / S.11 REINFORCING SPLICE ELEVATION NTS

NOTES:
1. ALL WALL REINFORCING FOR TANKS THAT CONTAIN WATER SHALL HAVE STAGGERED SLICES.

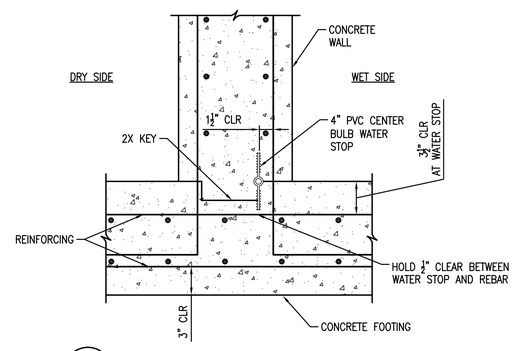

6 / S.11 SECTION 1½"=1'-0"
WATER STOP AT BASE OF WALL

NOTES:
1. WET SIDE CAN BE TANK, CONTAINMENT STRUCTURES, OR WATER TABLE SOAKED SOIL.
2. DRY SIDE CAN BE INTERIOR SPACE OR SOIL OUTSIDE TANK OR CONTAINMENT STRUCTURE.

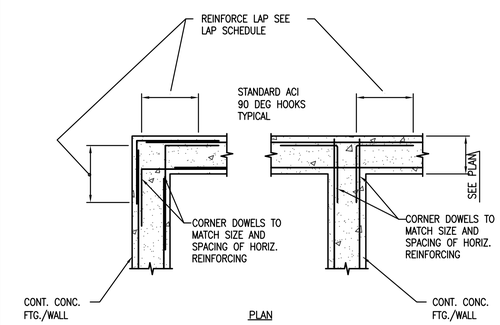

3 / S.11 TYPICAL WALL/FTG CORNER BAR DETAILS NTS

FINAL DESIGN - NOT RELEASED FOR CONSTRUCTION

WK DICKSON
community infrastructure consultants
616 COLONNADE DRIVE
CHARLOTTE, NC 28205
(t)704-334-5348
(f)704-334-0078
WWW.WKDICKSON.COM
NC LICENSE NO.F-0374

NORTH CAROLINA PROFESSIONAL SEAL 024096 ENGINEER MICHAEL A. GARDINER 01/20/2020
PROFESSIONAL SEAL

STEWART
101 N TRYON ST SUITE 1400
CHARLOTTE, NC 28202
T:704.334.7925
FIRM LICENSE #: C-1051
www.stewartinc.com
PROJECT #: 8170042

REVISION RECORD

NO.	DATE	DESCRIPTION	BY
	10/09/18	Issue for Owner and NCDEQ Review	

PROJECT NAME: KILLIAN CREEK WWTP PHASE 3 UPGRADE

DRAWING TITLE: GENERAL DETAILS

PROJ. MGR.:	MAG
DESIGN BY:	BK
DRAWN BY:	DJB
PROJ. DATE:	OCT. 09, 2018

DRAWING NUMBER: S.11

WKD PROJ. NO.: 20170294.00.CL

COPYRIGHT © WK DICKSON & CO., INC. ALL RIGHTS RESERVED. REPRODUCTION OR USE OF THE CONTENTS OF THIS DOCUMENT, ADDITIONS OR REDUCTIONS TO THIS DOCUMENT, IN WHOLE OR IN PART, WITHOUT WRITTEN CONSENT OF W.K. DICKSON & CO., INC., IS PROHIBITED. ONLY COPIES FROM THE ORIGINAL OF THIS DOCUMENT MARKED WITH AN ORIGINAL INK SIGNATURE AND/OR RED SEAL SHALL BE CONSIDERED TRUE COPIES.

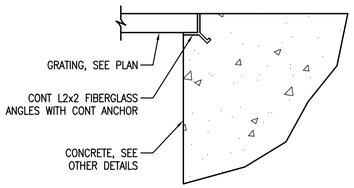

TYPICAL GRATING SUPPORT DETAIL

10 / S.12 — NO SCALE

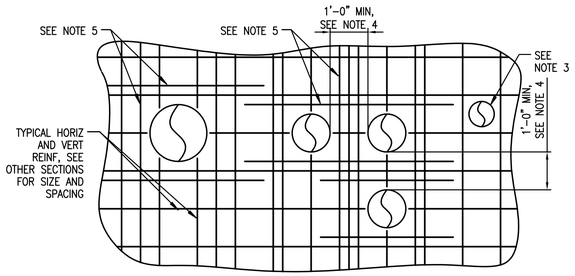

7 / S.12 DETAIL — ½"=1'-0"

PENETRATIONS AT CONCRETE WALLS

NOTES:
1. WALL OPENINGS SHALL BE COORDINATED AND DETAILED ON THE REINFORCEMENT SHOP DRAWINGS.
2. PROVIDE SLEEVES FOR ALL OPENINGS EXCEEDING 6" IN DIAMETER.
3. NO ADDITIONAL REINFORCING IS REQUIRED FOR OPENINGS NOT EXCEEDING 6" IN DIAMETER, PROVIDED NO TYPICAL REINFORCING IS INTERRUPTED.
4. PROVIDE 1'-0" MINIMUM SPACING BETWEEN EDGES OF OPENINGS, TYPICAL IN ALL DIRECTIONS FOR OPENINGS NOT EXCEEDING 18" IN DIAMETER. FOR OPENINGS BETWEEN 18" AND 30" IN DIAMETER, PROVIDE 2'-0" MINIMUM SPACING BETWEEN EDGES OF OPENINGS.
5. FOR OPENINGS EXCEEDING 6" IN DIAMETER AND FOR OPENINGS THAT INTERRUPT TYPICAL REINFORCING, PROVIDE ADDITIONAL VERTICAL REINFORCING BAR EACH SIDE OF OPENING. BAR SIZE TO MATCH TYPICAL VERTICAL REINFORCING. SPACING BETWEEN BARS SHALL BE 3". PROVIDE (2)#5 HORIZONTAL BARS EACH SIDE OF OPENING. MAINTAIN 3" SPACING BETWEEN BARS. BAR LENGTH SHALL BE TWO TIMES THE OPENING SIZE PLUS TWO TIMES THE BAR SPLICE LENGTH.
6. ALL PENETRATIONS TO BE CORE DRILLED SHALL BE SUBMITTED FOR APPROVAL PRIOR TO PROCEEDING WITH THE WORK.

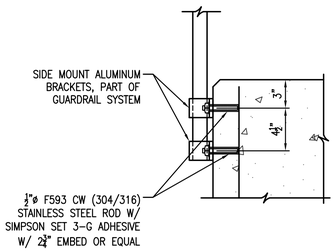

1 / S.12 SECTION — ½"=1'-0"

HANDRAIL ATTACHMENT

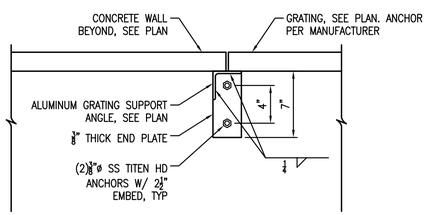

11 / S.12 GRATING SUPPORT DETAIL — NO SCALE

NOTE:
1. ALL METAL TO BE ALUMINUM.

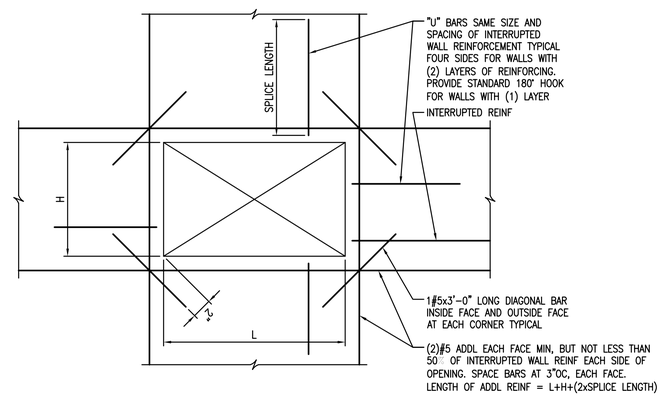

5 / S.12 ELEVATION — NO SCALE

REINFORCING AT OPENINGS IN REINF. CONCRETE WALLS

NOTES:
1. WALL OPENINGS SHALL BE COORDINATED AND DETAILED ON THE REINFORCEMENT SHOP DRAWINGS.
2. OPENINGS NOT TO EXCEED 3'-0" IN EITHER DIRECTION.
3. MAXIMUM CORED OPENING WITHOUT SLEEVE SHALL BE 6" DIA. MINIMUM CENTER TO CENTER SPACING OF CORED OPENINGS TO BE 1'-6".

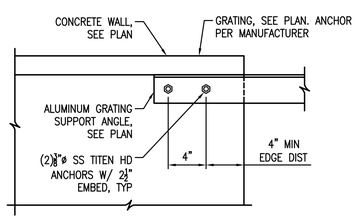

12 / S.12 GRATING SUPPORT DETAIL — NO SCALE

NOTE:
1. ALL METAL TO BE ALUMINUM.

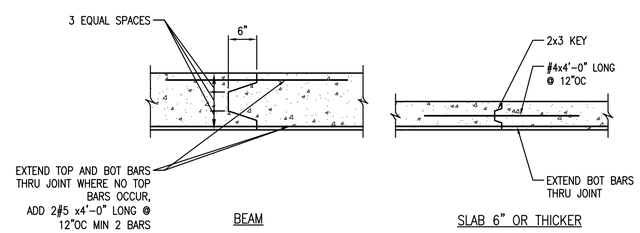

6 / S.12 SECTIONS — NO SCALE

CONSTRUCTION JOINTS IN FRAMED CONCRETE MEMBERS

NOTES:
1. ALL KEYS ARE AT MID-DEPTH OF MEMBERS. LOCATE ALL JOINTS AT POINTS OF MINIMUM SHEAR. APPROVAL OF LOCATION BY THE ARCHITECT IS REQUIRED.

FINAL DESIGN - NOT RELEASED FOR CONSTRUCTION

WK DICKSON
community infrastructure consultants
616 COLONNADE DRIVE
CHARLOTTE, NC 28205
(t)704-334-5348
(f)704-334-0078
WWW.WKDICKSON.COM
NC LICENSE NO.F-0374

NORTH CAROLINA PROFESSIONAL SEAL 024096 ENGINEER MICHAEL A. GARDINER 01/20/2020
PROFESSIONAL SEAL

STEWART
101 N TRYON ST SUITE 1400
CHARLOTTE, NC 28202
T 704.334.7925
FIRM LICENSE #: C-1051
www.stewartinc.com
PROJECT #: 8170042

REVISION RECORD

NO.	DATE	DESCRIPTION	BY
	10/09/18	Issue for Owner and NCDEQ Review	

PROJECT NAME: KILLIAN CREEK WWTP PHASE 3 UPGRADE

DRAWING TITLE: GENERAL DETAILS

PROJ. MGR.:	MAG
DESIGN BY:	BK
DRAWN BY:	DJB
PROJ. DATE:	OCT. 09, 2018

DRAWING NUMBER: S.12

WKD PROJ. NO.: 20170294.00.CL

COPYRIGHT © WK DICKSON & CO, INC. ALL RIGHTS RESERVED. REPRODUCTION OR USE OF THE CONTENTS OF THIS DOCUMENT, ADDITIONS OR REDITIONS TO THE CONTENTS OF THIS DOCUMENT, IN WHOLE OR IN PART, WITHOUT WRITTEN CONSENT OF WK DICKSON & CO, INC., IS PROHIBITED. ONLY COPIES FROM THE ORIGINAL OF THIS DOCUMENT MARKED "ORIGINAL" OR "COPY" REGISTERED WITH WK DICKSON & CO, INC. SHALL BE CONSIDERED TO BE VALID, TRUE COPIES.

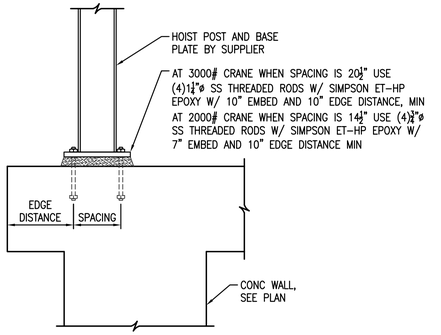

10 / S.13 SECTION ¾"=1'-0"
TYPICAL HOIST CRANE BASE DETAIL

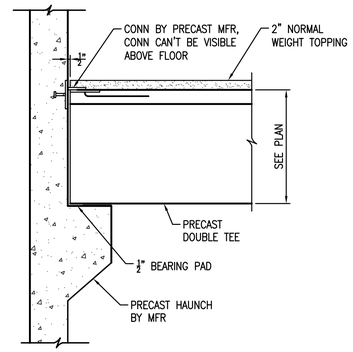

7 / S.13 SECTION ¾"=1'-0"
AT INTERIOR BEARING WALL

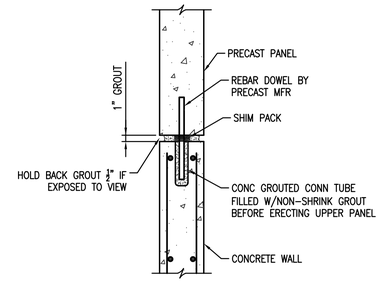

4 / S.13 SECTION 1"=1'-0"
PANEL TO CONCRETE WALL CONNECTION

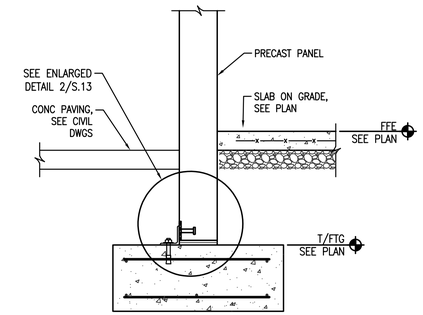

1 / S.13 SECTION ¾"=1'-0"

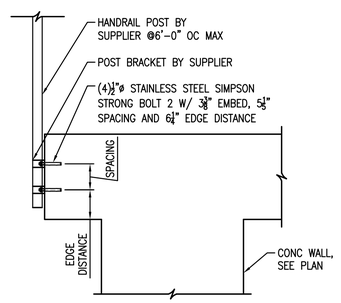

11 / S.13 SECTION ¾"=1'-0"
TYPICAL HANDRAIL CONNECTION DETAIL

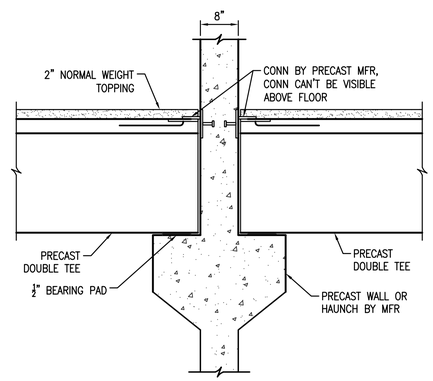

8 / S.13 SECTION ¾"=1'-0"
TYPICAL TEE TO PANEL CONNECTION

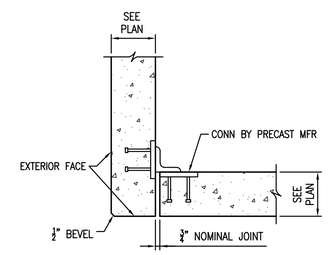

5 / S.13 SECTION 1"=1'-0"
PANEL TO PANEL CORNER CONNECTION

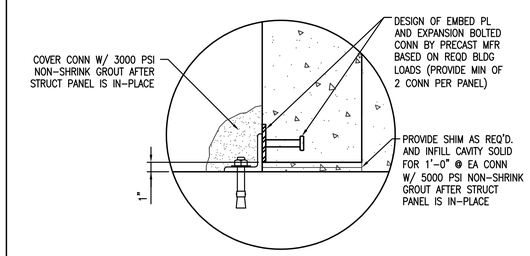

2 / S.13 SECTION ¾"=1'-0"

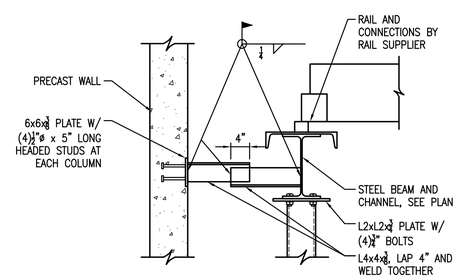

9 / S.13 SECTION ¾"=1'-0"
TYPICAL BRIDGE CRANE RAIL SUPPORT DETAIL

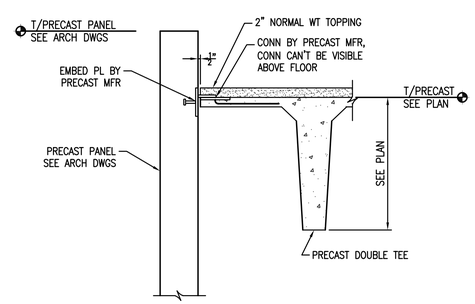

6 / S.13 SECTION ¾"=1'-0"
AT ROOF EXTERIOR

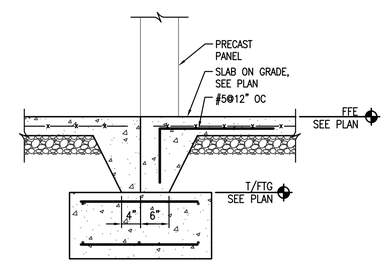

3 / S.13 SECTION ¾"=1'-0"

FINAL DESIGN - NOT RELEASED FOR CONSTRUCTION

WK DICKSON
community infrastructure consultants
616 COLONNADE DRIVE
CHARLOTTE, NC 28205
(t)704-334-5348
(f)704-334-0078
WWW.WKDICKSON.COM
NC LICENSE NO.F-0374

NORTH CAROLINA PROFESSIONAL SEAL 024096 ENGINEER MICHAEL A. GARDINER 01/20/2020
PROFESSIONAL SEAL

STEWART
101 N TRYON ST SUITE 1400
CHARLOTTE, NC 28202
T 704.334.7925
FIRM LICENSE #: C-1051
www.stewartfirm.com
PROJECT #: R170042

REVISION RECORD

NO.	DATE	DESCRIPTION	BY
	10/09/18	Issue for Owner and NCDEQ Review	

PROJECT NAME: KILLIAN CREEK WWTP PHASE 3 UPGRADE

DRAWING TITLE: GENERAL PRECAST CONCRETE SECTIONS

PROJ. MGR.:	MAG
DESIGN BY:	BK
DRAWN BY:	DJB
PROJ. DATE:	OCT. 09, 2018

DRAWING NUMBER: S.13

WKD PROJ. NO.: 20170294.00.CL

COPYRIGHT © WK DICKSON & CO., INC. ALL RIGHTS RESERVED. REPRODUCTION OR USE OF THE CONTENTS OF THIS DOCUMENT, ADDITIONS OR ALTERATIONS TO THIS DOCUMENT, IN WHOLE OR IN PART, WITHOUT WRITTEN CONSENT OF WK DICKSON & CO., INC., IS PROHIBITED. ANY UNAUTHORIZED REPRODUCTION OR USE, OR ADDITIONS OR ALTERATIONS TO THIS DOCUMENT, WITHOUT WRITTEN CONSENT OF WK DICKSON & CO., INC., IS TO BE DEEMED TRUE COPIES.

10 / S.14 INTERIOR NON LOAD BEARING CMU LINTEL SCHEDULE

OPENING SIZE \ LINTEL SIZE	4"x8"	6"x8"	6"x16"	8"X8"	8"x16"	12"x8"	12"x16"
3'-4"	1#3	1#3		1#3		2#3	
4'-0"	1#3	1#4		2#3		2#4	
4'-8"	1#4	1#4		2#4		2#4	
5'-4"	1#4	2#4		2#4		2#5	
6'-0"	1#5	2#4	1#4	2#4	2#3	2#5	2#4
6'-8"	NA	NA	1#5	NA	2#4	2#6	2#4

NOTES:
1. THIS SCHEDULE APPLIES TO OPENINGS IN ALL NON-LOAD BEARING WALLS AND PARTITIONS.
2. SEE ARCH DWGS FOR SIZE AND LOCATIONS OF OPENINGS.
3. PROVIDE 8" OF BEARING AT EACH END OF ALL OPENINGS.

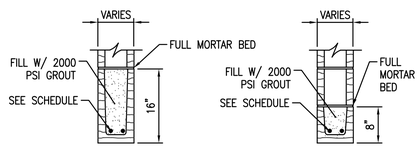

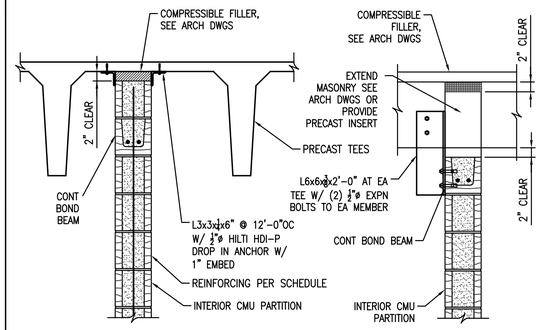

7 / S.14 SECTION ¾"=1'-0"
BRACING FOR INTERIOR CMU PARTITION, FULL HEIGHT WALLS
NOTES:
1. THIS DETAIL APPLIES WHERE THE DISTANCE BETWEEN INTERSECTING WALLS EXCEEDS 36 TIMES THE WALL THICKNESS.

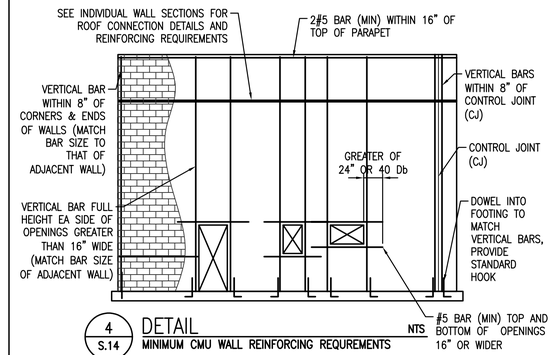

4 / S.14 DETAIL NTS
MINIMUM CMU WALL REINFORCING REQUREMENTS
NOTES:
1. REINFORCING SHOWN IS A MINIMUM REQUIREMENT, INDIVIDUAL WALL SECTION REINFORCING REQUIREMENTS (SUCH AS NUMBER OR SIZE OF BARS) SHALL TAKE PRECEDENCE OVER THE REQUIREMENTS SHOWN HEREON. SEE INDIVIDUAL WALL SECTIONS AND SCHEDULES FOR VERTICAL REINFORCING REQUIREMENTS.
2. ALL DISCONTINUOUS REINFORCEMENT SHALL BE LAPPED PER SCHEDULE.
3. VERTICAL STEEL MUST BE SECURED IN PLACE BEFORE THE BLOCKS ARE LAID. ALL VERTICAL REINFORCEMENT SHALL BE CONTINUOUS THROUGH MASONRY LINTELS AND BOND BEAMS UNO.
4. AT OPENINGS WHERE STEEL BEAM LINTELS ARE PROVIDED, REINFORCE THE JAMB CELL TO THE BEARING ELEVATION OF THE LINTEL, AND REINFORCE THE NEXT ADJACENT CELL PAST THE END OF THE BEAM FULL HEIGHT AS SHOWN IN THIS DETAIL.

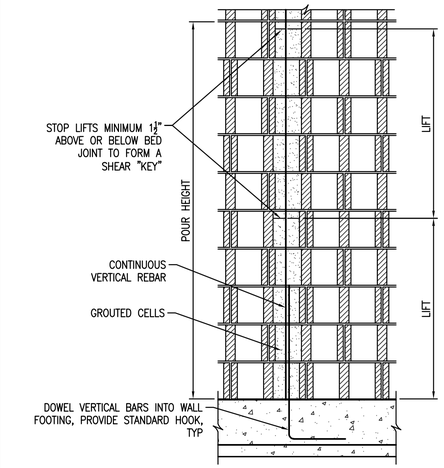

1 / S.14 DETAIL ¾"=1'-0"
MASONRY GROUT REQUIREMENTS

GENERAL GROUTING REQUIREMENTS:
1. ALL REINFORCED CELLS SHALL BE GROUTED SOLID.
2. REINFORCING BARS SHALL BE IN PROPER POSITION PRIOR TO PLACEMENT OF GROUT, NOT PUSHED DOWN INTO PREVIOUSLY PLACED GROUT. SAME REQUIREMENT APPLIES FOR EMBEDDED BOLTS AND FASTENERS.
3. MORTAR BEDDING UNDER THE FIRST COURSE OF BLOCK CELLS TO BE GROUTED SHALL PERMIT GROUT TO COME INTO DIRECT CONTACT WITH FOUNDATION.
4. PLACE MORTAR ON CROSS WEBS ADJACENT TO ALL GROUTED CELLS.
5. MORTAR THAT PROJECTS MORE THAN ½" INTO CELLS THAT ARE TO BE GROUTED SHALL BE REMOVED.
6. GROUTED CELLS SHALL BE MECHANICALLY VIBRATED DURING PLACEMENT OF GROUT. TEN MINUTES AFTER PLACING GROUT, EACH GROUTED CELL SHALL BE RECONSOLIDATED WITH A VIBRATOR.
7. METAL LATH SHALL BE PLACED UNDER ALL BOND BEAMS IN ORDER TO CONTAIN GROUT. AS AN ALTERNATE TO THIS, "U" SHAPED LINTEL BLOCKS MAY BE USED FOR BOND BEAMS.
8. EITHER LOW LIFT GROUTING OR HIGH LIFT GROUTING PROCEDURES MAY BE UTILIZED, AT THE CONTRACTOR'S OPTION.

LOW LIFT GROUTING PROCEDURE:
1. LAY WALL TO MAXIMUM OF 5'-0".
2. CLEAN MORTAR AND OTHER DEBRIS FROM CELLS TO BE GROUTED.
3. PLACE REINFORCING BARS IN PROPER POSITION.
4. PLACE GROUT UP TO LIFT HEIGHT AND VIBRATE.

HIGH LIFT GROUTING PROCEDURE:
1. CLEANOUT OPENINGS SHALL BE PROVIDED IN THE FACE SHELLS OF THE BOTTOM COURSE OF ALL CELLS TO BE GROUTED. OPENINGS SHALL BE LARGE ENOUGH TO ALLOW REMOVAL OF DEBRIS.
2. LAY WALL TO MAXIMUM POUR HEIGHT AND CLEAN DEBRIS FROM OPENINGS. PLACE REINFORCING BARS IN PROPER POSITION.
3. PLACE GROUT TO THE FOLLOWING HEIGHTS: MAXIMUM LIFT HEIGHT IS 5'-0"; MAXIMUM POUR HEIGHT IS 12'-0" UNLESS EXPRESSLY COORDINATED WITH THE STRUCTURAL ENGINEER.
4. AFTER INITIAL LIFT IS POURED AND VIBRATED, WAIT A MINIMUM OF 30 MINUTES AND A MAXIMUM OF 60 MINUTES BEFORE PLACING SUCCESSIVE LIFT. CONTINUE THIS PROCEDURE FOR FULL POUR HEIGHT.

11 / S.14 MINIMUM SPLICE & EMBEDMENT LENGTHS

BAR SIZE	f'm=2000 PSI, Fs= 24,000 PSI		
	LAP SPLICE		
#3	18"		
#4	24"		
#5	30"		
#6	36"		
#7	42"		
#8	48"		

NOTE:
LAP SPLICE LENGTHS BASED ON A MAXIMUM STEEL STRESS EQUAL TO 80%*Fs

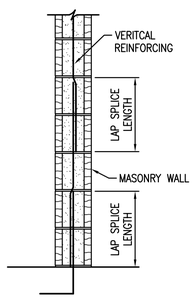

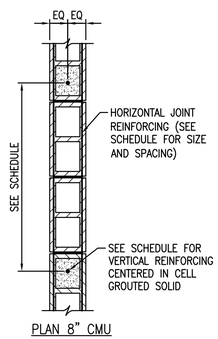

8 / S.14 DETAIL ¾"=1'-0"
TYPICAL CMU WALL REINFORCING

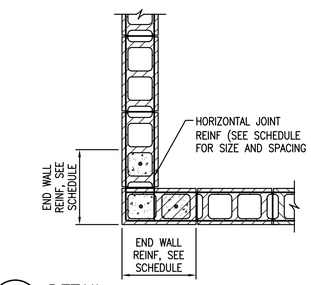

5 / S.14 DETAIL ¾"=1'-0"
AT CORNER CMU
NOTES:
1. ALL REINFORCING TO BE DOWELED INTO FOUNDATION.

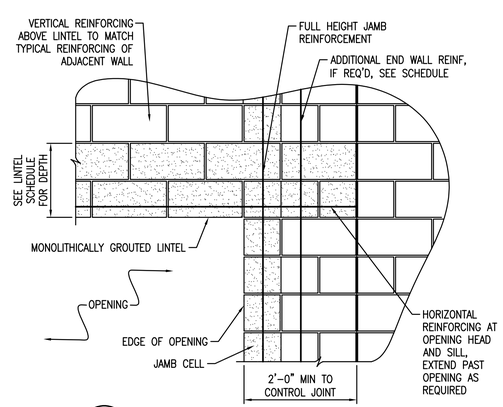

9 / S.14 DETAIL ¾"=1'-0"
CMU LINTEL/JAMB CONSTRUCTION
NOTES:
1. TYPICAL WALL REINFORCING AND CONTROL JOINT REINFORCING NOT SHOWN FOR CLARITY.

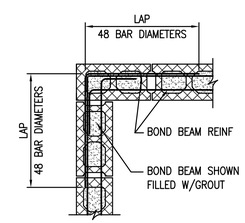

6 / S.14 PLAN DETAIL ¾"=1'-0"
TYPICAL CORNER BOND BEAM

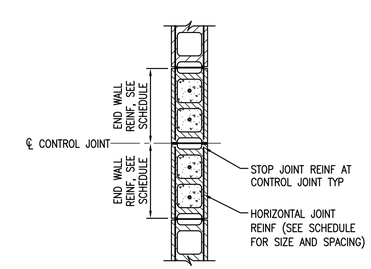

3 / S.14 DETAIL ¾"=1'-0"
CMU CONTROL JOINT
NOTES:
1. COORDINATE CONTROL JOINT LOCATIONS WITH ARCHITECT.
2. ALL REINFORCING TO BE DOWELED INTO FOUNDATION.

FINAL DESIGN - NOT RELEASED FOR CONSTRUCTION

WK DICKSON
community infrastructure consultants
616 COLONNADE DRIVE
CHARLOTTE, NC 28205
(t)704-334-5348
(f)704-334-0078
WWW.WKDICKSON.COM
NC LICENSE NO.F-0374

NORTH CAROLINA PROFESSIONAL ENGINEER SEAL 024096 MICHAEL A. GARDINER
01/20/2020
PROFESSIONAL SEAL

STEWART
101 N TRYON ST SUITE 1400
CHARLOTTE, NC 28202
T 704.334.7925
FIRM LICENSE #: C-1051
www.stewartfirm.com
PROJECT #: R170042

REVISION RECORD

NO.	DATE	DESCRIPTION	BY
	10/09/18	Issue for Owner and NCDEQ Review	

PROJECT NAME: KILLIAN CREEK WWTP PHASE 3 UPGRADE

DRAWING TITLE: GENERAL MASONRY DETAILS

PROJ. MGR.:	MAG
DESIGN BY:	BK
DRAWN BY:	DJB
PROJ. DATE:	OCT. 09, 2018

DRAWING NUMBER: S.14

WKD PROJ. NO.: 20170294.00.CL

COPYRIGHT © 2018 DOCUMENTS OF WKC, ALL RIGHTS RESERVED. REPRODUCTION OR USE OF THIS CONTENT OF THIS DOCUMENT, ADDITIONS OR CHANGES TO THIS DOCUMENT WITHOUT WRITTEN CONSENT OF WKC IS PROHIBITED. ONLY PRINTS FROM THE ORIGINAL DOCUMENT MARKED WITH AN ORIGINAL SIGNATURE AND SEAL SHALL BE CONSIDERED TO BE VALID. RAE COPIES

GENERAL PLUMBING SPECIFICATIONS

WASTE AND VENT PIPING: ALL WASTE PIPING SHALL BE D.W.V. SCHEDULE 40 SOLID CORE PIPING

GRADE WASTE PIPING 1/4 INCH PER FOOT (MIN) FOR PIPIE SIZES 2–1/2" OR LESS. FOR PIPE SIZES 3" TO 6", GRADE 1/8 INCH PER FOOT (MIN), 8" OR LARGER PIPE, GRADE MIN 1/16 INCH PER FOOT. ALL VENT PIPING SHALL BE GRADED AS TO DRAIN BACK TO THE DRAINAGE PIPE BY GRAVITY. REFER TO TABLE 704.1 OF THE NC PLUMBING FOR MINIMUM SLOPE REQUIRED.

WATER PIPING: ALL WATER PIPING SHALL BE SCHEDULE 80 PVC PIPING.

WATER PIPING UNDER GROUND OUTSIDE OF BUILDING SHALL BE AT LEAST 36 INCHES BELOW THE FINISHED GRADE SURFACE.

THERMAL INSULATION: ALL HOT AND COLD WATER PIPING INSIDE BUILDING AND IN CRAWL SPACE, ALL HOT WATER PIPING BELOW GRADE, AND COLD WATER PIPING BELOW GRADE WITHIN 3'–0" OF OUTSIDE SHALL BE INSULATED WITH 1" THICK "ARMAFLEX" OR IMCOA WITH SEALED JOINTS OR PREMOLDED FIBERGLASS WITH VAPOR BARRIER JACKET.

SUBMITTAL: THE CONTRACTOR SHALL WITHIN (15) DAYS OF RECEIPT OF PROPERLY SIGNED CONTRACT SUBMIT TO THE ARCHITECT/ENGINEER FOR APPROVAL (5) COPIES OF A LIST OF SUPPLIES AND MANUFACTURER'S MATERIAL AND EQUIPMENT TO BE USED ON THIS PROJECT.

SUBSTITUTION OF MATERIALS AND/OR EQUIPMENT FOR THAT SPECIFIED WILL NOT BE ACCEPTED WITHOUT PRIOR WRITTEN APPROVAL BY THE ARCHITECT/ENGINEER PRIOR TO RECEIPT OF BIDS.

GENERAL: THE ENTIRE PLUMBING SYSTEM SHALL BE IN ACCORDANCE WITH THE N.C. STATE PLUMBING CODE. SUBMIT THREE (3) COPIES OF PLUMBING INSPECTION CERTIFICATES TO OWNSER. PLUMBING CONTRACTOR SHALL OBTAIN AND PAY FOR ALL PERMITS REQUIRED BY GOVERNING AUTHORITIES FOR WORK DONE UNDER THIS CONTRACT. PROVIDE AND INSTALL ALL SUPPORTS, BRACKETS, MATERIALS AND LABOR AS REQUIRED FOR A COMPLETE AND ACCEPTABLE PLUMBING SYSTEM. PLUMBING CONTRACTOR SHALL CLEAN ALL PLUMBING FIXTURES AFTER ALL CONSTRUCTION IS COMPLETE.

GUARANTEE: THE PLUMBING CONTRACTOR SHALL GUARANTEE ALL MATERIALS AND WORKMANSHIP FOR A PERIOD OF NOT LESS THAN ONE (1) YEAR FROM DATE OF FINAL ACCEPTANCE BY OWNER STATING THE DAY THE GUARANTEE BEGINS AND ENDS.

WATER HAMMER CONTROL: ARRESTORS SHALL BE SIZED AND APPLIED IN ACCORDANCE WITH THE PLUMBING AND DRAINAGE INSTITUTE STANDARD PDI–WH–201.

EQUIPMENT EQUAL TO JOSAM #75000 OR EQUAL BY AMTROL, WADE, SIOUX CHIEF OR SMITH IS ACCEPTABLE.

PROVIDE "KARP" ACCESS COVER IN WALL TO SERVICE WATER HAMMER ARRESTORS.

FIXTURE SCHEDULE:

SEE DRAWINGS.

CLEANOUTS: <S>

CLEANOUTS SHALL BE AS FOLLOWS:

FLOOR CLEANOUTS – IN FINISHED AREAS – JOSAM #5500–1–SQ WITH SQARE NICKEL BRONZE TOP

– IN TILE FLOORS –SIOUX CHIEF PVC
– IN CARPETED FLOORS –SIOUX CHIEF PVC

WALL CLEANOUTS – SIOUX CHIEF PVC WITH STAINLESS STEEL COVERPLATE

CLEANOUTS IN EXPOSED PIPING – SIOUX CHIEF PVC

EXTERIOR CLEANOUTS – SIOUX CHIEF PVC

CLEANOUTS IN WATERPROOF FLOOR SHALL HAVE FLASHING FLANGE AND CLAMPING DEVICE.

DOMESTIC WATER HEATERS: <S>

ELECTRIC WATER HEATERS SHALL BE UL LISTED AND COMPLETE WITH ALL STANDARD FEATURES, FIVE (5) YEAR TANK WARRANTY, GLASS–LINED TANK, FOAM INSULATION ON THE TANK, ANODE ROD, AUTOMATIC TEMPERATURE CONTROL, AND AUTOMATIC HIGH–LIMIT SAFETY CUTOFF.

EACH WATER HEATER SHALL BE PROVIDED WITH AN ASME AND NORTH CAROLINA APPROVED PRESSURE AND TEMPERATURE RELIEF VALVE. UNITS NOT INSTALLED WITH VACUUM BREAKER ON COLD WATER SUPPLY LINE SHALL BE PROVIDED WITH AGA CERTIFIED VACUUM RELIEF VALVE PER ANSI Z21.22. A GATE VALVE SHALL BE INSTALLED ON SAME FLOOR AS UNIT AND NO FURTHER THAN 3 FEET ON THE COLD WATER SUPPLY.

EACH WATER HEATER AND ITS INSTALLATION SHALL COMPLY WITH THE LATEST ISSUE AND ALL ADDENDA THERETO OF THE N. C. STATE BOILER INSPECTION LAWS AND REGULATIONS. ALL WIRING AND CONTROLS ASSOCIATED WITH THE HEATERS SHALL BE U.L. APPROVED AND IN ACCORDANCE WITH THE LATEST EDITION OF THE NATIONAL ELECTRICAL CODE.

EACH HEATER TANK SHALL BE FITTED WITH NORTH CAROLINA APPROVED "DIP" TUBE AND LABELED TO SHOW APPROVAL FOR INSTALLATION IN THE STATE OF NORTH CAROLINA.

DISCHARGE RELIEF VALVE FROM EACH WATER HEATER SHALL BE PIPED FULL SIZE TO WITHIN FOUR (4) INCHES OF THE FLOOR OVER A FLOOR DRAIN, DRIP PAN OR OTHER SAFE LOCATION. DISCHARGE PIPE SHALL BE SUPPORTED AND ANCHORED SO THAT IT WILL NOT PUT UNDUE STRAIN ON THE RELIEF VALVE BODY OR MOUNTING COUPLING.

FINAL DRAWINGS - NOT RELEASED FOR CONSTRUCTION

080818RB172000

BRITTAIN ENGINEERING, INC.
CONSULTING MECHANICAL AND ELECTRICAL ENGINEERS
PO BOX 939 HICKORY, NC 28603
TEL. (828) 328-1913 FAX (828) 328-1814

WK DICKSON
community infrastructure consultants
616 COLONNADE DRIVE
CHARLOTTE, NC 28205
(t)704-334-5348
(f)704-334-0078
WWW.WKDICKSON.COM
NC LICENSE NO.F-0374

NORTH CAROLINA PROFESSIONAL SEAL 7883 ENGINEER DANIAL DRABERT TAN 10/23/18

PROFESSIONAL SEAL

REVISION RECORD

NO.	DATE	DESCRIPTION	BY
A	10/9/18	ISSUE FOR OWNER/NCDEQ REVIEW	CRF

PROJECT NAME: KILLIAN CREEK WWTP PHASE 3 UPGRADE

DRAWING TITLE: SPECIFICATIONS PLUMBING

PROJ. MGR.:	CRF
DESIGN BY:	DRB
DRAWN BY:	RNB
PROJ. DATE:	SEPT. 2018

DRAWING NUMBER: P0.1

WKD PROJ. NO.: 20170294.00.CL

COPYRIGHT © 2018 DICKSON & CO., INC. ALL RIGHTS RESERVED. REPRODUCTION OR USE OF THIS CONTENT OR THE DOCUMENT, IN WHOLE OR IN PART, WITHOUT WRITTEN PERMISSION OF DICKSON & CO., INC. IS PROHIBITED. ADDITIONS OR CHANGES TO THIS DOCUMENT ARE NOT ALLOWED. PRINT THE ORIGINAL OF THIS DOCUMENT MARKED WITH AN ORIGINAL SIGNATURE AND SEAL SHALL BE CONSIDERED TO BE VALID. RUE COPIES

PLUMBING FIXTURE SCHEDULE

NOTE: ALL FIXTURE APPURTENANCES SHALL BE SUPPLIED BY FIXTURE MANUFACTURER.

FIXTURE SYMBOL	FIXTURE TYPE	FIXTURE DESCRIPTION	CONNECTION SIZES			
			W	V	CW	HW
WH	WATER HEATER	LOCHINVAR MODEL #ESJ050KD, 50 GALLON SHORT ELECTRIC WATER HEATER WITH TWO (2) 4500 WATT ELEMENTS, 208 VOLT, SINGLE PHASE, NON–SIMULTANEOUS WIRING WITH 3 YEAR WARRANTY. FURNISH WITH A.S.M.E. APPROVED RELIEF VALVE & PROPER SIZED EXPANSION TANK.			3/4"	3/4"
MV	MIXING VALVE	LAWLER THERMOSTATIC MIXING VAVLE MODEL 911 EMERGENCY SHOWERS UNIT NO. 84701 WITH INLET CHECK VALVES, LOCKABLE BALL VALVES ON INLETS, DIAL THEMOMETERS ON INLETS AND OUTLET, BRONZE VALVE FINISH, STAINLESS STEEL LOCKABLE CABINET, FACTORY SET POINT AT 85°F PER ANSI Z358.1, 60°F–100°F.			1.25"	1.25"

ACCEPTABLE MANUFACTURERS:

WATER HEATERS – STATE, BOCK, LOCHINVAR, BRADFORD WHITE, A.O. SMITH, RHEEM.

HOSE BIBBS – ZURN, WOODFORD, NIBCO, PRIER.

FLOOR DRAINS, ROOF DRAINS, FLOOR SINKS – WADE, SMITH, ZURN, JOSAM, SIOUX CHIEF, WATTS DRAINAGE, MIFAB.

MIXING VALVES – SYMMONS, LAWLER, WATTS, BRADLEY, POWERS.

EMERGENCY EYE WASH/SHOWERS – BRADLEY, GUARDIAN, HAWS, SPEAKMAN

PLUMBING LEGEND

SYMBOL	DESCRIPTION
	SANITARY WASTE
	SANITARY VENT
	DOMESTIC COLD WATER
	DOMESTIC HOT WATER
	DOMESTIC HOT WATER RECIRC.
	SHUT–OFF VALVE
	COMBINATION FLOW CONTROL/ BALL VALVE
	CUT–OFF VALVE IN RISER
	RISER UP AND RISER DOWN
	CLEANOUT (CO)
	HOSE BIBB (HB) OR WALL HYDRANT (WF)
VTR	VENT THRU ROOF

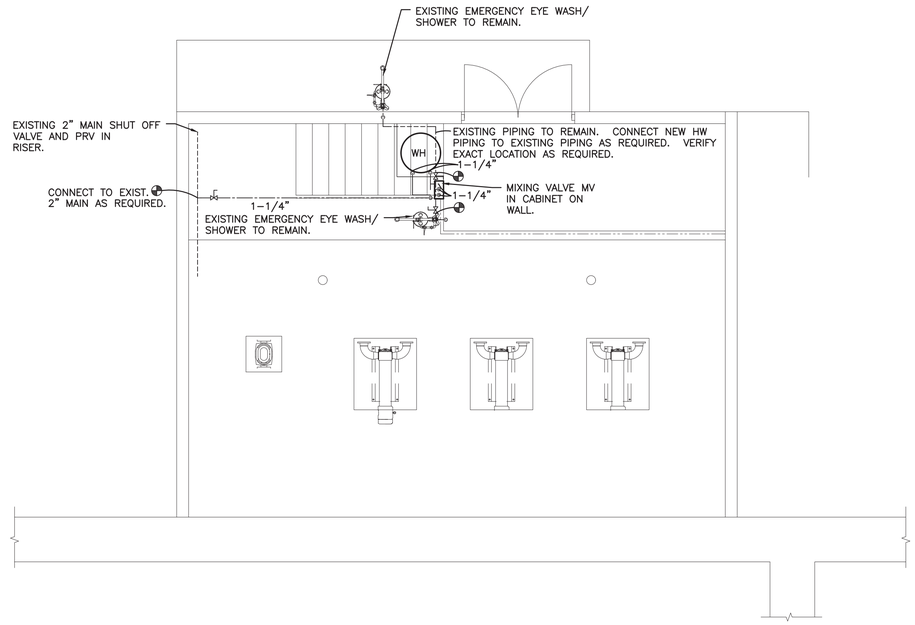

EXISTING SLUDGE PUMP BUILDING FLOOR PLAN - PLUMBING

SCALE: 1/4" = 1'-0"

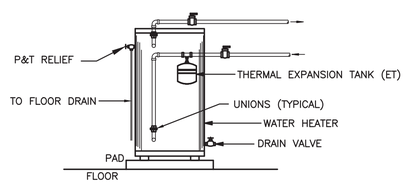

(A) ELECTRIC WATER HEATER

SHORT MODEL SCALE: NONE

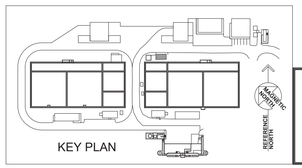

KEY PLAN

061318RB172000

BRITTAIN ENGINEERING, INC.
CONSULTING MECHANICAL AND ELECTRICAL ENGINEERS
PO BOX 939 HICKORY, NC 28603
TEL. (828) 328-1813 FAX. (828) 328-1814

FINAL DRAWINGS - NOT RELEASED FOR CONSTRUCTION

WK DICKSON
community infrastructure consultants
616 COLONNADE DRIVE
CHARLOTTE, NC 28205
(t)704-334-5348
(f)704-334-0078
WWW.WKDICKSON.COM
NC LICENSE NO.F-0374

NORTH CAROLINA PROFESSIONAL SEAL 7883 ENGINEER DANIAL DRB 10/23/18

PROFESSIONAL SEAL

REVISION RECORD

NO.	DATE	DESCRIPTION	BY
A	10/9/18	ISSUE FOR OWNER/NCDEQ REVIEW	CRF

PROJECT NAME: KILLIAN CREEK WWTP PHASE 3 UPGRADE

DRAWING TITLE: EXISTING SLUDGE PUMP BUILDING PLUMBING

PROJ. MGR.:	CRF
DESIGN BY:	DRB
DRAWN BY:	RNB
PROJ. DATE:	SEPT. 2018
DRAWING NUMBER:	4-P.1
WKD PROJ. NO.:	20170294.00.CL

COPYRIGHT © 2018 DICKSON & CO., INC., ALL RIGHTS RESERVED. REPRODUCTION OR USE OF THIS CONTENT OR THE DOCUMENT, IN WHOLE OR IN PART, WITHOUT WRITTEN PERMISSION OF DICKSON & CO., INC. IS PROHIBITED. ADDITIONS OR ALTERATIONS TO THIS DOCUMENT ARE PROHIBITED. PRINTS THE ORIGINAL OF THIS DOCUMENT MARKED WITH AN ORIGINAL SIGNATURE AND SEAL SHALL BE CONSIDERED TO BE VALID. FACE COPIES

PLUMBING FIXTURE SCHEDULE

NOTE: ALL FIXTURE APPURTENANCES SHALL BE SUPPLIED BY FIXTURE MANUFACTURER.

FIXTURE SYMBOL	FIXTURE TYPE	FIXTURE DESCRIPTION	CONNECTION SIZES W	V	CW	HW
WH	WATER HEATER	LOCHINVAR MODEL #ESJ050KD, 50 GALLON SHORT ELECTRIC WATER HEATER WITH TWO (2) 4500 WATT ELEMENTS, 208 VOLT, SINGLE PHASE, NON-SIMULTANEOUS WIRING WITH 3 YEAR WARRANTY. FURNISH WITH A.S.M.E. APPROVED RELIEF VALVE & PROPER SIZED EXPANSION TANK.			3/4"	3/4"
MV	MIXING VALVE	LAWLER THERMOSTATIC MIXING VAVLE MODEL 911 EMERGENCY SHOWERS UNIT NO. 84701 WITH INLET CHECK VALVES, LOCKABLE BALL VALVES ON INLETS, DIAL THEMOMETERS ON INLETS AND OUTLET, BRONZE VALVE FINISH, STAINLESS STEEL LOCKABLE CABINET, FACTORY SET POINT AT 85'F PER ANSI Z358.1, 60'F-100'F.			1.25"	1.25"
HB	HOSE BIBB	WOODFORD MODEL 24P-3/4 WALL FAUCET WITH WHEEL HANDLE AND VACUUM BREAKER BACKFLOW PREVENTER, VERIFY MOUNTING HEIGHT.				3/4"
FD	FLOOR DRAIN	JOSAM #30000-6S-92 SERIES CAST IRON FLOOR DRAIN WITH GALVANIZED INTERIOR AND TYPE "B" 6" STRAINER.	4"	2"		
EEWS	EMERGENCY EYEWASH/DRENCH SHOWER	BRADLEY MODEL S19314BFSS EMERGENCY EYE WASH DRENCH SHOWER. ALL STAINLESS STEEL, VERIFY LEFT HAND MOUNT WITH OWNER & CABINETS. MOUNT MIXING VALVE AT EWS AND SET TO TEPID TEMPERATURE PER ANSI Z358.1-2014.				1.25"

ACCEPTABLE MANUFACTURERS:

WATER HEATERS – STATE, BOCK, LOCHINVAR, BRADFORD WHITE, A.O. SMITH, RHEEM.

HOSE BIBBS – ZURN, WOODFORD, NIBCO, PRIER.

FLOOR DRAINS, ROOF DRAINS, FLOOR SINKS – WADE, SMITH, ZURN, JOSAM, SIOUX CHIEF, WATTS DRAINAGE, MIFAB.

MIXING VALVES – SYMMONS, LAWLER, WATTS, BRADLEY, POWERS.

EMERGENCY EYE WASH/SHOWERS – BRADLEY, GUARDIAN, HAWS, SPEAKMAN

PLUMBING LEGEND

SYMBOL	DESCRIPTION
	SANITARY WASTE
	SANITARY VENT
	DOMESTIC COLD WATER
	DOMESTIC HOT WATER
	DOMESTIC HOT WATER RECIRC.
	SHUT-OFF VALVE
	COMBINATION FLOW CONTROL/ BALL VALVE
	CUT-OFF VALVE IN RISER
	RISER UP AND RISER DOWN
	CLEANOUT (CO)
	HOSE BIBB (HB) OR WALL HYDRANT (WF)
VTR	VENT THRU ROOF

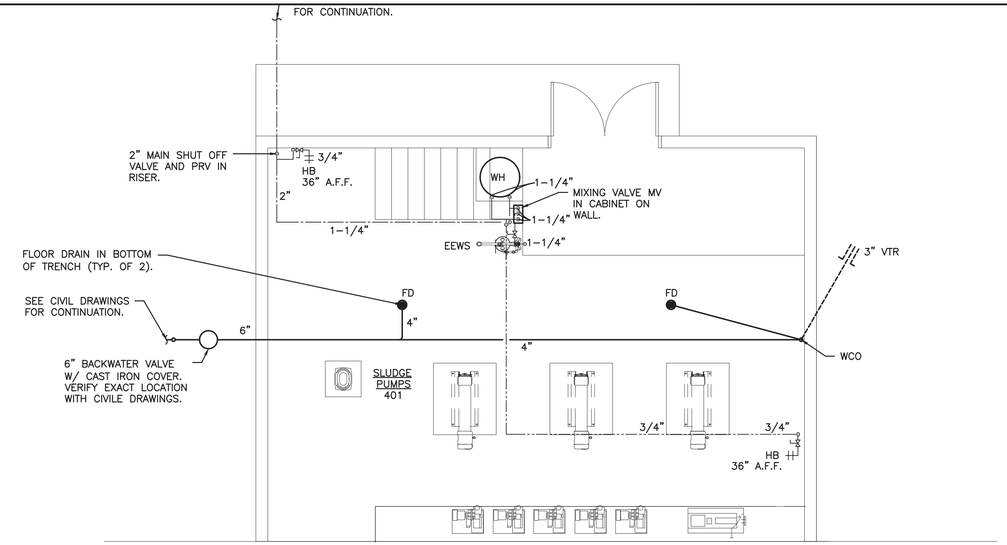

SLUDGE PUMP BUILDING FLOOR PLAN - PLUMBING

SCALE: 1/4" = 1'-0"

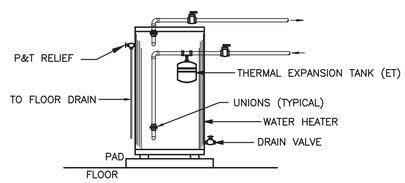

(A) ELECTRIC WATER HEATER

SHORT MODEL SCALE: NONE

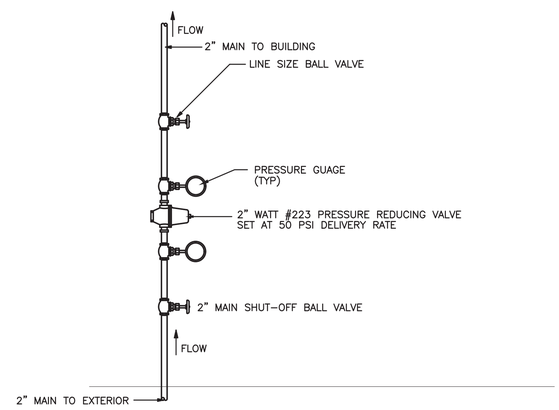

(B) WATER PRESSURE REDUCING VALVE

SCALE: NONE

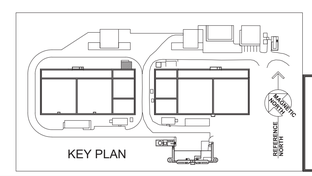

061318RB172000

BRITTAIN ENGINEERING, INC.
CONSULTING MECHANICAL AND ELECTRICAL ENGINEERS
PO BOX 939 HICKORY, NC 28603
TEL (828)328-1813 FAX (828)328-1814

FINAL DRAWINGS - NOT RELEASED FOR CONSTRUCTION

WK DICKSON
community infrastructure consultants
616 COLONNADE DRIVE
CHARLOTTE, NC 28205
(t)704-334-5348
(f)704-334-0078
WWW.WKDICKSON.COM
NC LICENSE NO.F-0374

NORTH CAROLINA PROFESSIONAL SEAL 7883 ENGINEER DONALD R. BRITTAIN 10/23/18

PROFESSIONAL SEAL

REVISION RECORD

NO.	DATE	DESCRIPTION	BY
A	10/9/18	ISSUE FOR OWNER/NCDEQ REVIEW	CRF

PROJECT NAME: KILLIAN CREEK WWTP PHASE 3 UPGRADE

DRAWING TITLE: SLUDGE PUMP BUILDING PLUMBING

PROJ. MGR.:	CRF
DESIGN BY:	DRB
DRAWN BY:	RNB
PROJ. DATE:	SEPT. 2018

DRAWING NUMBER: 4.A-P.1

WKD PROJ. NO.: 20170294.00.CL

COPYRIGHT © 2018 DICKSON & CO., INC. ALL RIGHTS RESERVED. REPRODUCTION OR USE OF THIS CONTENT OR THE DOCUMENT, IN WHOLE OR IN PART, WITHOUT WRITTEN PERMISSION OF DICKSON & CO., INC. IS PROHIBITED. ADDITIONS OR CHANGES TO THIS DOCUMENT MADE BY OTHERS THAN THE ORIGINAL SIGNATURE AND SEAL SHALL BE CONSIDERED TO BE VALID. RAE COPIES

PLUMBING FIXTURE SCHEDULE

NOTE: ALL FIXTURE APPURTENANCES SHALL BE SUPPLIED BY FIXTURE MANUFACTURER.

FIXTURE SYMBOL	FIXTURE TYPE	FIXTURE DESCRIPTION	CONNECTION SIZES W	V	CW	HW
WCH	WATER CLOSET (HANDICAPPED)	KOHLER HIGHCLIFF K-96057-0 VITREOUS CHINA, FLUSH VALVE, FLOOR MOUNTED, SIPHON JET, ELONGATED BOWL. PROVIDE BEMIS #1655-C OPEN FRONT WHITE SEAT, LESS COVER. WATER CLOSET SHALL BE FURNISHED WITH SLOAN REGAL #113-1.6-XL-YK FLUSH VALVE.	4"	2"	1"	
LA	WALL MOUNTED LAVATORY	KOHLER #K-2867/DELTA 22C401 FAUCET AND PERFORATED DRAIN WITH WHEEL OPERATED VALVE/MCGUIRE #8872-C-F, "P" TRAP, MATCHING ZURN CONCEALED FLOOR MOUNTED CARRIER TRUEBRO WASTE AND WATER GUARD #102, MOUNT RIM 34" A.F.F. WATTS MODEL LFMMV THERMOSTATIC MIXING VALVE TO MEET 2012 NCPC 416.5.	2"	1 1/2"	1/2"	1/2"
SK	SINGLE COMP. SINK	JUST SL-2125-A-GR, 21" X 25" LEDGE TYPE, 20 GAUGE 304 STAINLESS STEEL SINK 7" DEEP. DELTA 27C4844 FAUCET WITH AERATOR. JUST #J35 STAINLESS CRUMB STRAINER WITH REMOVEABLE BASKET WITH RUBBER SEAT STOPPER AND 1 1/2" STAINLESS TAILPIECE. KOHLER #7607 3/8" FLEXIBLE LAVATORY SUPPLY UNIT WITH WHEEL OPERATED ANGLE VALVE AND CAST BRASS WALL ESCUTCHEON AND SET SCREW. MCGUIRE #8912C-F, 1 1/2" ADJUSTABLE SEMI-CAST BRASS "P" TRAP WITH INTEGRAL THREAD CLEANOUT PLUG, OUTLET TO WALL AND CAST BRASS ESCUTCHEON.	2"	1 1/2"	1/2"	1/2"
WH	WATER HEATER	LOCHINVAR MODEL #ETJ050KD, 50 GALLON ELECTRIC WATER HEATER WITH TWO (2) 4500 WATT ELEMENTS, 208 VOLT, SINGLE PHASE, NON-SIMULTANEOUS WIRING WITH 3 YEAR WARRANTY. FURNISH WITH A.S.M.E. APPROVED RELIEF VALVE & PROPER SIZED EXPANSION TANK.			3/4"	3/4"
MV	MIXING VALVE	LAWLER THERMOSTATIC MIXING VAVLE MODEL 911 EMERGENCY SHOWERS UNIT NO. 84701 WITH INLET CHECK VALVES, LOCKABLE BALL VALVES ON INLETS, DIAL THEMOMETERS ON INLETS AND OUTLET, BRONZE VALVE FINISH, STAINLESS STEEL LOCKABLE CABINET, FACTORY SET POINT AT 85°F PER ANSI Z358.1, 60°F-100°F.			1.25"	1.25"
FD	FLOOR DRAIN	JOSAM #30000-6S-92 SERIES CAST IRON FLOOR DRAIN WITH GALVANIZED INTERIOR AND TYPE "B" 6" STRAINER.	4"	2"		
HB	HOSE BIBB	WOODFORD MODEL 24P-3/4 WALL FAUCET WITH WHEEL HANDLE AND VACUUM BREAKER BACKFLOW PREVENTER, VERIFY MOUNTING HEIGHT.				3/4"
FDA	FLOOR DRAIN	JOSAM #32308-1-92 SUPER-FLO SERIES CAST IRON FLOOR DRAIN WITH GALVANIZED INTERIOR AND TYPE "B" 6" STRAINER.	4"	2"		
EEWS	EMERGENCY EYEWASH/DRENCH SHOWER	BRADLEY MODEL S19314BFSS EMERGENCY EYE WASH DRENCH SHOWER. ALL STAINLESS STEEL, VERIFY LEFT HAND MOUNT WITH OWNER & CABINETS. MOUNT MIXING VALVE AT EWS AND SET TO TEPID TEMPERATURE PER ANSI Z358.1-2014.				1.25"

ACCEPTABLE MANUFACTURERS:

WATER HEATERS – STATE, BOCK, LOCHINVAR, BRADFORD WHITE, A.O. SMITH, RHEEM.

HOSE BIBBS – ZURN, WOODFORD, NIBCO, PRIER.

FLOOR DRAINS, ROOF DRAINS, FLOOR SINKS – WADE, SMITH, ZURN, JOSAM, SIOUX CHIEF, WATTS DRAINAGE, MIFAB.

MIXING VALVES – SYMMONS, LAWLER, WATTS, BRADLEY, POWERS.

EMERGENCY EYE WASH/SHOWERS – BRADLEY, GUARDIAN, HAWS, SPEAKMAN

PLUMBING LEGEND

SYMBOL	DESCRIPTION
	SANITARY WASTE
	SANITARY VENT
	DOMESTIC COLD WATER
	DOMESTIC HOT WATER
	DOMESTIC HOT WATER RECIRC.
	SHUT-OFF VALVE
	COMBINATION FLOW CONTROL/ BALL VALVE
	CUT-OFF VALVE IN RISER
	RISER UP AND RISER DOWN
	CLEANOUT (CO)
	HOSE BIBB (HB) OR WALL HYDRANT (WF)
VTR	VENT THRU ROOF

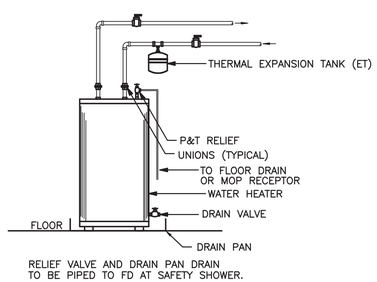

A ELECTRIC WATER HEATER

SCALE: NONE

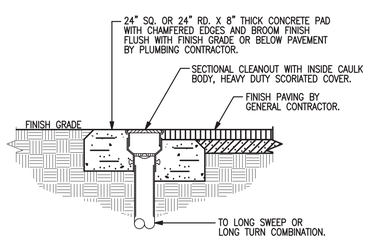

NOTE:
OMIT CONCRETE PAD IF C.O. IS SET IN CONC. SURFACE PROVIDED BY GENERAL CONTRACTOR.

B CLEANOUT AT FINISH GRADE

SCALE: NONE

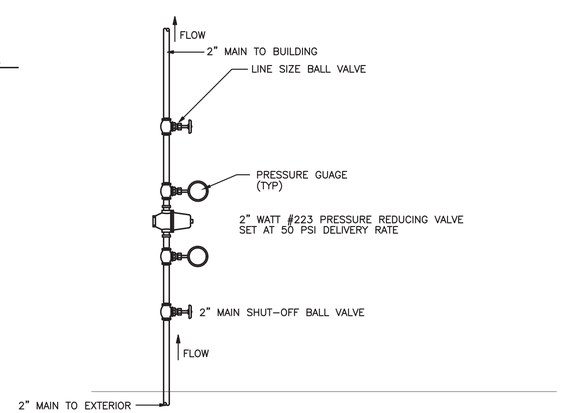

C WATER PRESSURE REDUCING VALVE

SCALE: NONE

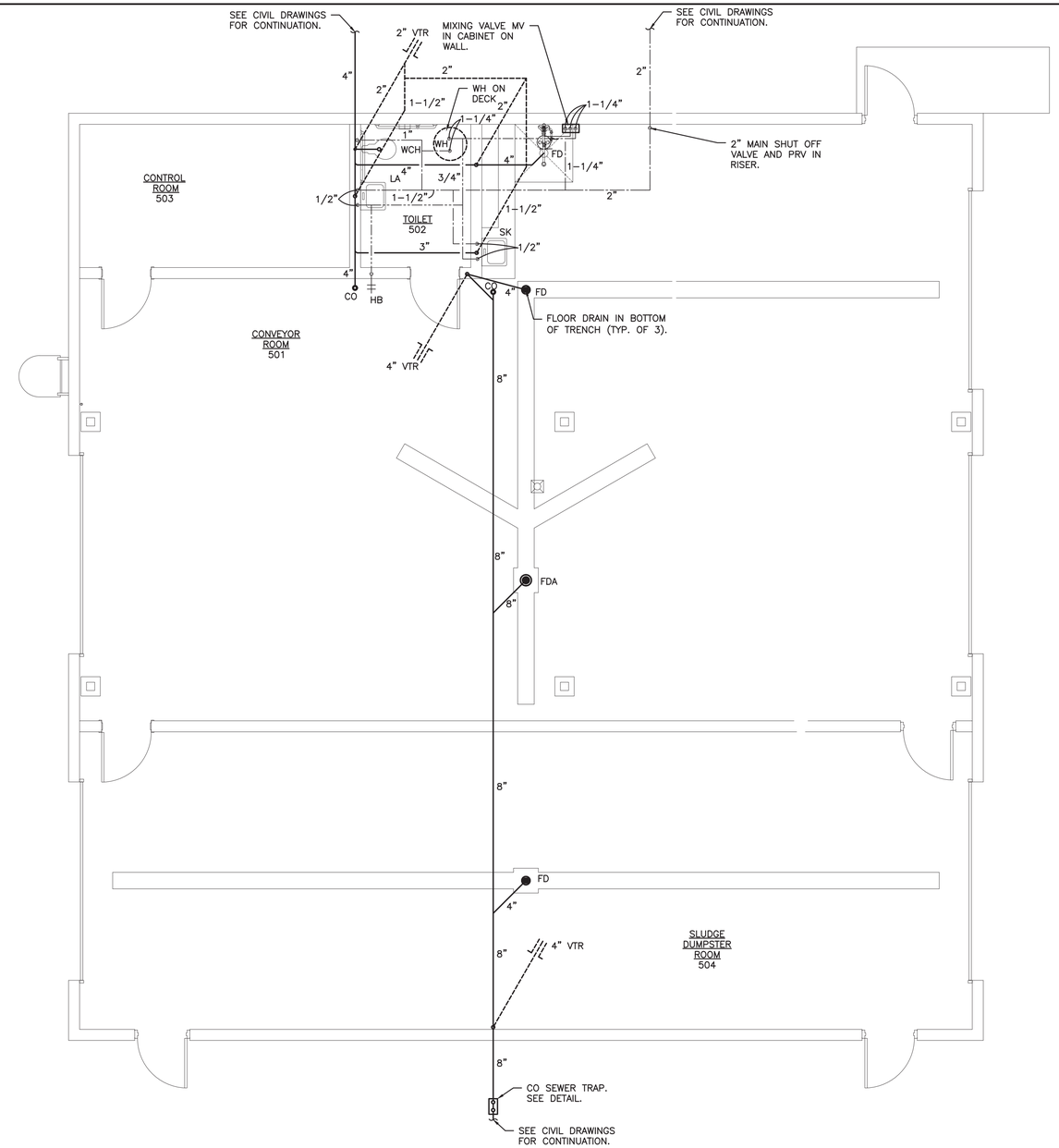

SLUDGE DEWATERING BUILDING FLOOR PLAN - PLUMBING

SCALE: 1/4" = 1'-0"

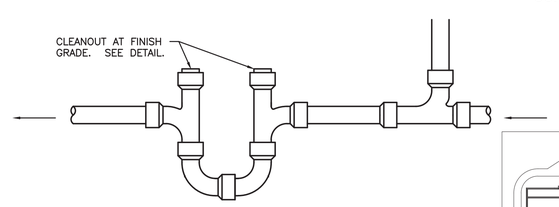

D SEWER TRAP DETAIL

SCALE: NONE

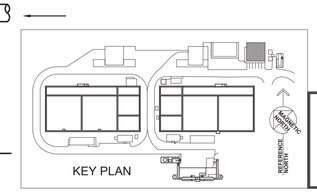

061318RB172000

BRITTAIN ENGINEERING, INC.
CONSULTING MECHANICAL AND ELECTRICAL ENGINEERS
PO BOX 939 HICKORY, NC 28603
TEL. (828) 328-1813 FAX. (828) 328-1814

WK DICKSON
community infrastructure consultants
616 COLONNADE DRIVE
CHARLOTTE, NC 28205
(t)704-334-5348
(f)704-334-0078
WWW.WKDICKSON.COM
NC LICENSE NO.F-0374

NORTH CAROLINA PROFESSIONAL SEAL 7883 ENGINEER DANIEL D. BERTRAND 09/25/18

PROFESSIONAL SEAL

FINAL DRAWINGS - NOT RELEASED FOR CONSTRUCTION

REVISION RECORD

NO.	DATE	DESCRIPTION	BY
A	10/9/18	ISSUE FOR OWNER/NCDEQ REVIEW	CRF

PROJECT NAME: KILLIAN CREEK WWTP PHASE 3 UPGRADE

DRAWING TITLE: SLUDGE DEWATERING BUILDING PLUMBING

PROJ. MGR.:	CRF
DESIGN BY:	DRB
DRAWN BY:	RNB
PROJ. DATE:	SEPT. 2018

DRAWING NUMBER: 5.A-P.1

WKD PROJ. NO.: 20170294.00.CL

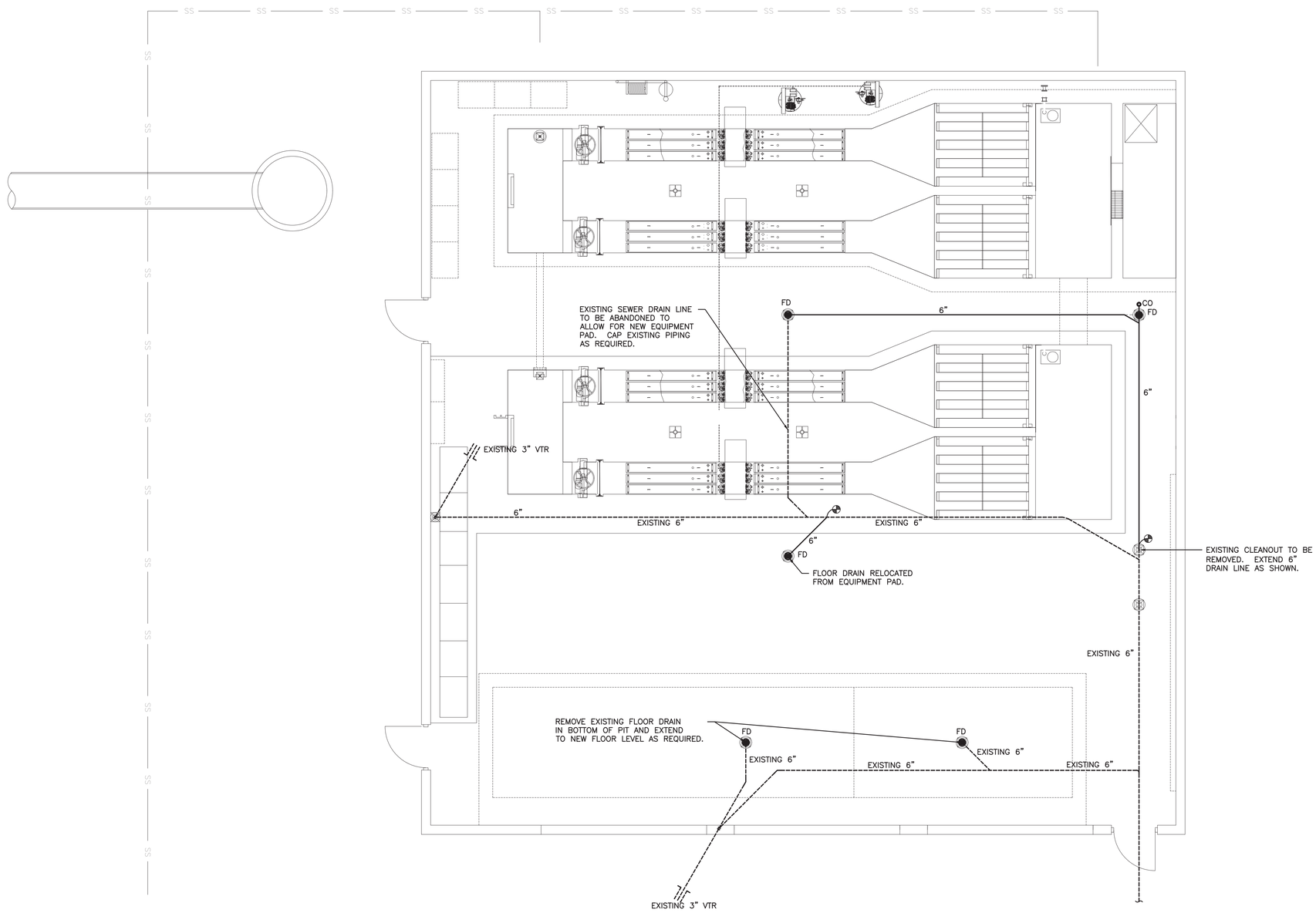

EFFLUENT UV BUILDING FLOOR PLAN - PLUMBING

SCALE: 1/4" = 1'-0"

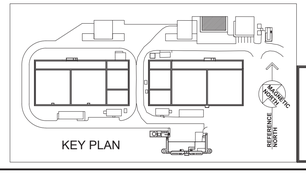

KEY PLAN

061318RB172000

BRITTAIN ENGINEERING, INC.
CONSULTING MECHANICAL AND ELECTRICAL ENGINEERS
PO BOX 939 HICKORY, NC 28603
TEL (828) 328-1813 FAX (828) 328-1814

FINAL DRAWINGS - NOT RELEASED FOR CONSTRUCTION

WK DICKSON
community infrastructure consultants
616 COLONNADE DRIVE
CHARLOTTE, NC 28205
(t)704-334-5348
(f)704-334-0078
WWW.WKDICKSON.COM
NC LICENSE NO.F-0374

NORTH CAROLINA PROFESSIONAL SEAL 7883 ENGINEER DONALD BRITTAIN 09/23/19
PROFESSIONAL SEAL

REVISION RECORD

NO.	DATE	DESCRIPTION	BY
A	10/9/18	ISSUE FOR OWNER/NCDEQ REVIEW	CRF

PROJECT NAME: KILLIAN CREEK WWTP PHASE 3 UPGRADE

DRAWING TITLE: EFFLUENT UV BUILDING PLUMBING

PROJ. MGR.:	CRF
DESIGN BY:	DRB
DRAWN BY:	RNB
PROJ. DATE:	SEPT. 2018
DRAWING NUMBER:	6-P.1
WKD PROJ. NO.:	20170294.00.CL

COPYRIGHT © WK DICKSON & CO., INC. ALL RIGHTS RESERVED. REPRODUCTION OR USE OF THE CONTENTS OF THIS DOCUMENT, ADDITIONS OR DELETIONS TO THIS DOCUMENT, IN WHOLE OR IN PART, WITHOUT WRITTEN CONSENT OF WK DICKSON & CO., INC., IS PROHIBITED. ONLY COPIES FROM THE ORIGINAL OF THIS DOCUMENT MARKED WITH AN ORIGINAL SIGNATURE AND SEAL SHALL BE CONSIDERED TO BE VALID, TRUE COPIES.

COPYRIGHT © 2018 DICKSON & CO., INC. ALL RIGHTS RESERVED. REPRODUCTION OR USE OF THIS CONTENT OR THE DOCUMENT IN WHICH IT APPEARS WITHOUT WRITTEN PERMISSION IS PROHIBITED. ADDITIONS OR CHANGES TO THIS DOCUMENT MUST BE MADE BY THE ARCHITECT OR ENGINEER OF RECORD. PRINTS THE OWNER OF THE DOCUMENT MARKED WITH AN ORIGINAL SIGNATURE AND SEAL SHALL BE CONSIDERED TO BE VALID, TRUE COPIES.

PLUMBING FIXTURE SCHEDULE

NOTE: ALL FIXTURE APPURTENANCES SHALL BE SUPPLIED BY FIXTURE MANUFACTURER.

FIXTURE SYMBOL	FIXTURE TYPE	FIXTURE DESCRIPTION	CONNECTION SIZES			
			W	V	CW	HW
WH	WATER HEATER	LOCHINVAR MODEL #ETJ050KD, 50 GALLON ELECTRIC WATER HEATER WITH TWO (2) 4500 WATT ELEMENTS, 208 VOLT, SINGLE PHASE, NON-SIMULTANEOUS WIRING WITH 3 YEAR WARRANTY. FURNISH WITH A.S.M.E. APPROVED RELIEF VALVE & PROPER SIZED EXPANSION TANK.			3/4"	3/4"
MVA	MIXING VALVE	LAWLER THERMOSTATIC MIXING VAVLE MODEL 911 EMERGENCY EYEWASH UNIT NO. 84909 P.C. TO PROVIDE INLET CHECK VALVES AND ISOLATION VALVES, DIAL THEMOMETER ON OUTLET, BRONZE VALVE FINISH, STAINLESS STEEL LOCKABLE CABINET, FACTORY SET POINT AT 85°F PER ANSI Z358.1, 60°F–100°F.			1/2"	1/2"
HB	HOSE BIBB	WOODFORD MODEL 24P–3/4 WALL FAUCET WITH WHEEL HANDLE AND VACUUM BREAKER BACKFLOW PREVENTER, VERIFY MOUNTING HEIGHT.				3/4"
EEW	EMERGENCY EYEWASH	BRADLEY MODEL S19314BFSS EMERGENCY EYE WASH DRENCH SHOWER. ALL STAINLESS STEEL, VERIFY LEFT HAND MOUNT WITH OWNER & CABINETS. MOUNT MIXING VALVE AT EWS AND SET TO TEPID TEMPERATURE PER ANSI Z358.1–2014.				1.25"

ACCEPTABLE MANUFACTURERS:

WATER HEATERS – STATE, BOCK, LOCHINVAR, BRADFORD WHITE, A.O. SMITH, RHEEM.

HOSE BIBBS – ZURN, WOODFORD, NIBCO, PRIER.

FLOOR DRAINS, ROOF DRAINS, FLOOR SINKS – WADE, SMITH, ZURN, JOSAM, SIOUX CHIEF, WATTS DRAINAGE, MIFAB.

MIXING VALVES – SYMMONS, LAWLER, WATTS, BRADLEY, POWERS.

EMERGENCY EYE WASH/SHOWERS – BRADLEY, GUARDIAN, HAWS, SPEAKMAN

PLUMBING LEGEND

SYMBOL	DESCRIPTION
	SANITARY WASTE
	SANITARY VENT
	DOMESTIC COLD WATER
	DOMESTIC HOT WATER
	DOMESTIC HOT WATER RECIRC.
	SHUT–OFF VALVE
	COMBINATION FLOW CONTROL/ BALL VALVE
	CUT–OFF VALVE IN RISER
	RISER UP AND RISER DOWN
	CLEANOUT (CO)
	HOSE BIBB (HB) OR WALL HYDRANT (WF)
VTR	VENT THRU ROOF

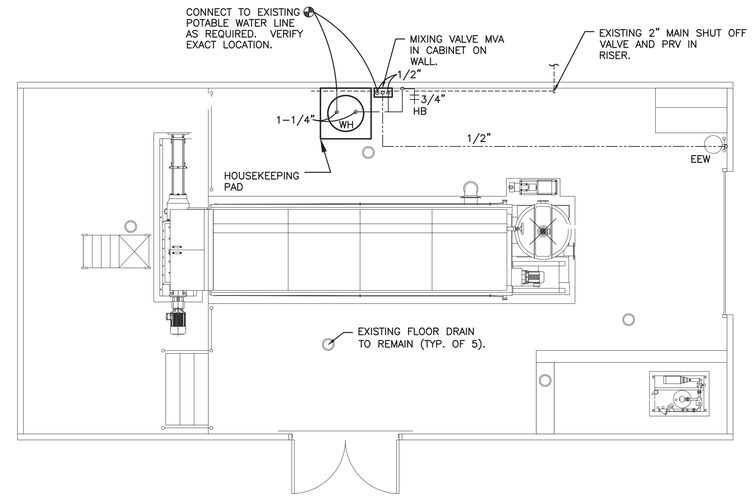

EXISTING ROTARY DRUM THICKENER BUILDING FLOOR PLAN - PLUMBING

SCALE: 1/4" = 1'-0"

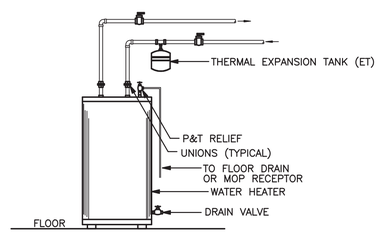

(A) ELECTRIC WATER HEATER

SCALE: NONE

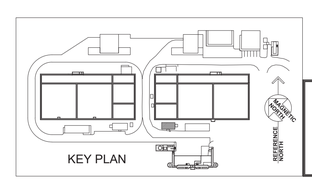

071618RB172000

BRITTAIN ENGINEERING, INC.
CONSULTING MECHANICAL AND ELECTRICAL ENGINEERS
PO BOX 939 HICKORY, NC 28603
TEL. (828) 328-1813 FAX. (828) 328-1814

FINAL DRAWINGS - NOT RELEASED FOR CONSTRUCTION

WK DICKSON
community infrastructure consultants
616 COLONNADE DRIVE
CHARLOTTE, NC 28205
(t)704-334-5348
(f)704-334-0078
WWW.WKDICKSON.COM
NC LICENSE NO.F-0374

NORTH CAROLINA PROFESSIONAL SEAL 7883 ENGINEER DONALD ROBERT TAYLOR 10/23/18

PROFESSIONAL SEAL

REVISION RECORD

NO.	DATE	DESCRIPTION	BY
A	10/9/18	ISSUE FOR OWNER/NCDEQ REVIEW	CRF

PROJECT NAME: KILLIAN CREEK WWTP PHASE 3 UPGRADE

DRAWING TITLE: EXISTING ROTARY DRUM THICKENER BUILDING PLUMBING

PROJ. MGR.:	CRF
DESIGN BY:	DRB
DRAWN BY:	RNB
PROJ. DATE:	SEPT. 2018

DRAWING NUMBER: 7-P.1

WKD PROJ. NO.: 20170294.00.CL

COPYRIGHT © 2018 DICKSON & CO., INC. ALL RIGHTS RESERVED. REPRODUCTION OR USE OF THIS CONTENT OR THE DOCUMENT, IN WHOLE OR IN PART, WITHOUT WRITTEN PERMISSION OF DICKSON & CO., INC. IS PROHIBITED. ADDITIONS OR CHANGES TO THIS DOCUMENT AFTER PRINT PRODUCTION BY OTHERS THAN AN ORIGINAL SIGNATURE AND SEAL SHALL BE CONSIDERED TO BE NULL. RUE COPIES

PLUMBING FIXTURE SCHEDULE

NOTE: ALL FIXTURE APPURTENANCES SHALL BE SUPPLIED BY FIXTURE MANUFACTURER.

FIXTURE SYMBOL	FIXTURE TYPE	FIXTURE DESCRIPTION	CONNECTION SIZES			
			W	V	CW	HW
WH	WATER HEATER	LOCHINVAR MODEL #ETJ050KD, 50 GALLON ELECTRIC WATER HEATER WITH TWO (2) 4500 WATT ELEMENTS, 208 VOLT, SINGLE PHASE, NON-SIMULTANEOUS WIRING WITH 3 YEAR WARRANTY. FURNISH WITH A.S.M.E. APPROVED RELIEF VALVE & PROPER SIZED EXPANSION TANK.			3/4"	3/4"
MVA	MIXING VALVE	LAWLER THERMOSTATIC MIXING VAVLE MODEL 911 EMERGENCY EYEWASH UNIT NO. 84909 P.C. TO PROVIDE INLET CHECK VALVES AND ISOLATION VALVES, DIAL THEMOMETER ON OUTLET, BRONZE VALVE FINISH, STAINLESS STEEL LOCKABLE CABINET, FACTORY SET POINT AT 85°F PER ANSI Z358.1, 60°F–100°F.			1/2"	1/2"
HB	HOSE BIBB	WOODFORD MODEL 24P–3/4 WALL FAUCET WITH WHEEL HANDLE AND VACUUM BREAKER BACKFLOW PREVENTER, VERIFY MOUNTING HEIGHT.				3/4"
EEW	EMERGENCY EYEWASH	BRADLEY MODEL S192114SC EMERGENCY EYE WASH WITH DUST COVER. ALL STAINLESS STEEL, VERIFY LEFT HAND MOUNT WITH OWNER & CABINETS. MOUNT MIXING VALVE AT EEW AND SET TO TEPID TEMPERATURE PER ANSI Z358.1–2014.				1.25"

ACCEPTABLE MANUFACTURERS:

WATER HEATERS – STATE, BOCK, LOCHINVAR, BRADFORD WHITE, A.O. SMITH, RHEEM.

HOSE BIBBS – ZURN, WOODFORD, NIBCO, PRIER.

FLOOR DRAINS, ROOF DRAINS, FLOOR SINKS – WADE, SMITH, ZURN, JOSAM, SIOUX CHIEF, WATTS DRAINAGE, MIFAB.

MIXING VALVES – SYMMONS, LAWLER, WATTS, BRADLEY, POWERS.

EMERGENCY EYE WASH/SHOWERS – BRADLEY, GUARDIAN, HAWS, SPEAKMAN

PLUMBING LEGEND

SYMBOL	DESCRIPTION
	SANITARY WASTE
	SANITARY VENT
	DOMESTIC COLD WATER
	DOMESTIC HOT WATER
	DOMESTIC HOT WATER RECIRC.
	SHUT–OFF VALVE
	COMBINATION FLOW CONTROL/ BALL VALVE
	CUT–OFF VALVE IN RISER
	RISER UP AND RISER DOWN
	CLEANOUT (CO)
	HOSE BIBB (HB) OR WALL HYDRANT (WF)
VTR	VENT THRU ROOF

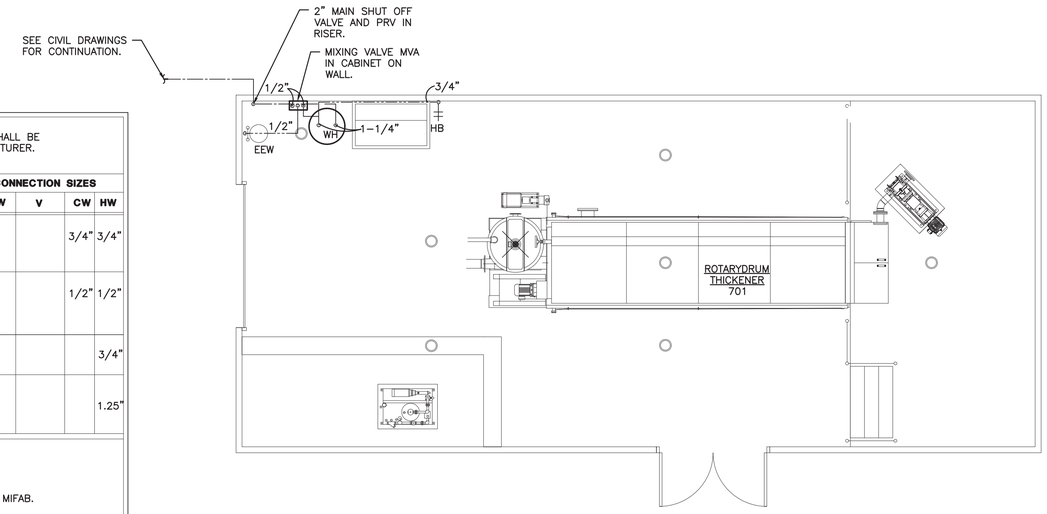

ROTARY DRUM THICKENER BUILDING FLOOR PLAN - PLUMBING

SCALE: 1/4" = 1'-0"

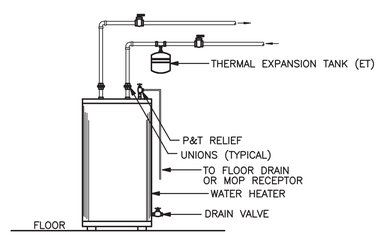

(A) ELECTRIC WATER HEATER

SCALE: NONE

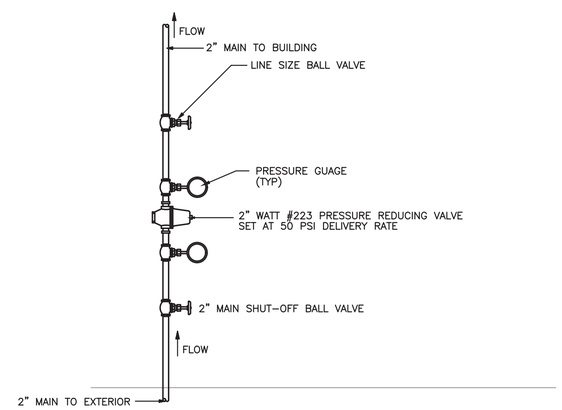

(B) WATER PRESSURE REDUCING VALVE

SCALE: NONE

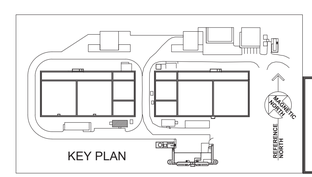

061318RB172000

BRITTAIN ENGINEERING, INC.
CONSULTING MECHANICAL AND ELECTRICAL ENGINEERS
PO BOX 939 HICKORY, NC 28603
TEL: (828) 326-1813 FAX: (828) 326-1814

FINAL DRAWINGS - NOT RELEASED FOR CONSTRUCTION

WK DICKSON
community infrastructure consultants
616 COLONNADE DRIVE
CHARLOTTE, NC 28205
(t)704-334-5348
(f)704-334-0078
WWW.WKDICKSON.COM
NC LICENSE NO.F-0374

NORTH CAROLINA PROFESSIONAL SEAL 7883 ENGINEER DANIAL D. SERTTAN 10/23/18

PROFESSIONAL SEAL

REVISION RECORD

NO.	DATE	DESCRIPTION	BY
A	10/9/18	ISSUE FOR OWNER/NCDEQ REVIEW	CRF

PROJECT NAME: KILLIAN CREEK WWTP PHASE 3 UPGRADE

DRAWING TITLE: ROTARY DRUM THICKENER BUILDING PLUMBING

PROJ. MGR.:	CRF
DESIGN BY:	DRB
DRAWN BY:	RNB
PROJ. DATE:	SEPT. 2018

DRAWING NUMBER: 7.A-P.1

WKD PROJ. NO.: 20170294.00.CL

COPYRIGHT © 2017 DOCUMENTS OF WKC, ALL RIGHTS RESERVED. REPRODUCTION OR USE OF THIS CONTENT OR THE DOCUMENT, EXCEPT FOR CONFIDENTIAL USE BY THE OWNER FOR THE PROJECT DESIGNATED IN THE AGREEMENT FOR THE PROJECT, IS PROHIBITED WITHOUT THE PRIOR WRITTEN CONSENT OF WKC. ONLY PRINTS BEARING THE ORIGINAL SIGNATURE AND SEAL SHALL BE CONSIDERED TO BE VALID. RUE COPIES

PLUMBING FIXTURE SCHEDULE

NOTE: ALL FIXTURE APPURTENANCES SHALL BE SUPPLIED BY FIXTURE MANUFACTURER.

FIXTURE SYMBOL	FIXTURE TYPE	FIXTURE DESCRIPTION	CONNECTION SIZES			
			W	V	CW	HW
WH	WATER HEATER	LOCHINVAR MODEL #ETJ050KD, 50 GALLON TALL ELECTRIC WATER HEATER WITH TWO (2) 4500 WATT ELEMENTS, 208 VOLT, SINGLE PHASE, NON-SIMULTANEOUS WIRING WITH 3 YEAR WARRANTY. FURNISH WITH A.S.M.E. APPROVED RELIEF VALVE & PROPER SIZED EXPANSION TANK.			3/4"	3/4"
MV	MIXING VALVE	LAWLER THERMOSTATIC MIXING VAVLE MODEL 911 EMERGENCY SHOWERS UNIT NO. 84701 WITH INLET CHECK VALVES, LOCKABLE BALL VALVES ON INLETS, DIAL THEMOMETERS ON INLETS AND OUTLET, BRONZE VALVE FINISH, STAINLESS STEEL LOCKABLE CABINET, FACTORY SET POINT AT 85°F PER ANSI Z358.1, 60°F-100°F.			1.25"	1.25"
EEWS	EMERGENCY EYEWASH/DRENCH SHOWER	BRADLEY MODEL S19314BFSS EMERGENCY EYE WASH DRENCH SHOWER. ALL STAINLESS STEEL, VERIFY LEFT HAND MOUNT WITH OWNER & CABINETS. MOUNT MIXING VALVE AT EWS AND SET TO TEPID TEMPERATURE PER ANSI Z358.1-2014.				1.25"

ACCEPTABLE MANUFACTURERS:

WATER HEATERS – STATE, BOCK, LOCHINVAR, BRADFORD WHITE, A.O. SMITH, RHEEM.

HOSE BIBBS – ZURN, WOODFORD, NIBCO, PRIER.

FLOOR DRAINS, ROOF DRAINS, FLOOR SINKS – WADE, SMITH, ZURN, JOSAM, SIOUX CHIEF, WATTS DRAINAGE, MIFAB.

MIXING VALVES – SYMMONS, LAWLER, WATTS, BRADLEY, POWERS.

EMERGENCY EYE WASH/SHOWERS – BRADLEY, GUARDIAN, HAWS, SPEAKMAN

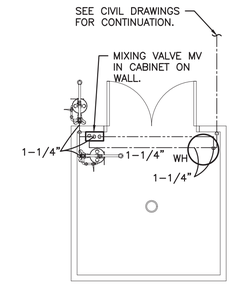

CHEMICAL FEED BUILDING FLOOR PLAN - PLUMBING

SCALE: 1/4" = 1'-0"

PLUMBING LEGEND

SYMBOL	DESCRIPTION
	SANITARY WASTE
	SANITARY VENT
	DOMESTIC COLD WATER
	DOMESTIC HOT WATER
	DOMESTIC HOT WATER RECIRC.
	SHUT-OFF VALVE
	COMBINATION FLOW CONTROL/ BALL VALVE
	CUT-OFF VALVE IN RISER
	RISER UP AND RISER DOWN
	CLEANOUT (CO)
	HOSE BIBB (HB) OR WALL HYDRANT (WF)
VTR	VENT THRU ROOF

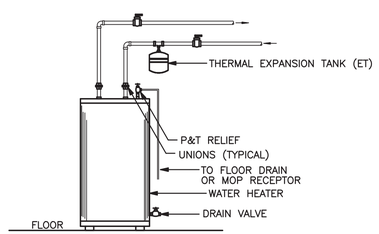

A ELECTRIC WATER HEATER

SCALE: NONE

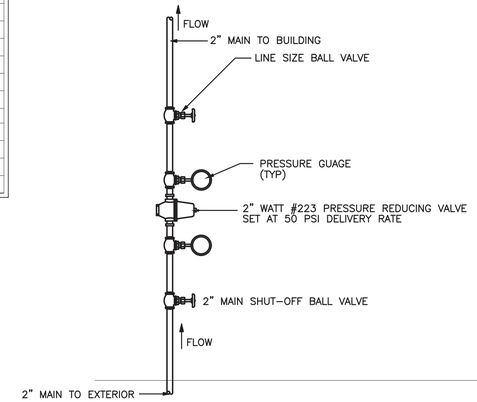

B WATER PRESSURE REDUCING VALVE

SCALE: NONE

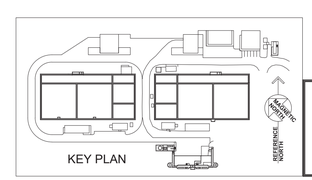

KEY PLAN

061318RB172000

BRITTAIN ENGINEERING, INC.
CONSULTING MECHANICAL AND ELECTRICAL ENGINEERS
PO BOX 939 HICKORY, NC 28603
TEL. (828) 328-1813 FAX. (828) 328-1814

FINAL DRAWINGS - NOT RELEASED FOR CONSTRUCTION

WK DICKSON
community infrastructure consultants
616 COLONNADE DRIVE
CHARLOTTE, NC 28205
(t)704-334-5348
(f)704-334-0078
WWW.WKDICKSON.COM
NC LICENSE NO.F-0374

NORTH CAROLINA PROFESSIONAL SEAL 7883 ENGINEER DANIAL DEWAYNE BRITTAIN 10/23/18

PROFESSIONAL SEAL

REVISION RECORD

NO.	DATE	DESCRIPTION	BY
A	10/9/18	ISSUE FOR OWNER/NCDEQ REVIEW	CRF

PROJECT NAME: KILLIAN CREEK WWTP PHASE 3 UPGRADE

DRAWING TITLE: CHEMICAL FEED BUILDING PLUMBING

PROJ. MGR.:	CRF
DESIGN BY:	DRB
DRAWN BY:	RNB
PROJ. DATE:	SEPT. 2018

DRAWING NUMBER: 8-P.1

WKD PROJ. NO.: 20170294.00.CL

COPYRIGHT © 2018 DICKSON & CO., INC. ALL RIGHTS RESERVED. REPRODUCTION OR USE OF THIS CONTENT OR THE DOCUMENT, IN WHOLE OR IN PART, WITHOUT WRITTEN PERMISSION OF DICKSON & CO., INC. IS PROHIBITED. ADDITIONS OR CHANGES TO THIS DOCUMENT AFTER PRINT THE ORIGINAL OF THIS DOCUMENT MARKED WITH AN ORIGINAL SIGNATURE AND SEAL SHALL BE CONSIDERED TO BE VALID. RULE COPIES

PLUMBING LEGEND

SYMBOL	DESCRIPTION
	SANITARY WASTE
	SANITARY VENT
	DOMESTIC COLD WATER
	DOMESTIC HOT WATER
	DOMESTIC HOT WATER RECIRC.
	SHUT-OFF VALVE
	COMBINATION FLOW CONTROL/ BALL VALVE
	CUT-OFF VALVE IN RISER
	RISER UP AND RISER DOWN
	CLEANOUT (CO)
	HOSE BIBB (HB) OR WALL HYDRANT (WF)
VTR	VENT THRU ROOF

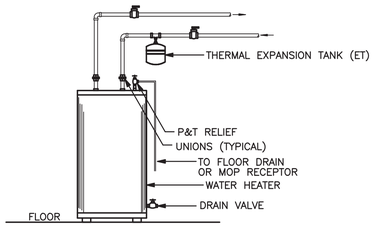

(A) ELECTRIC WATER HEATER

SCALE: NONE

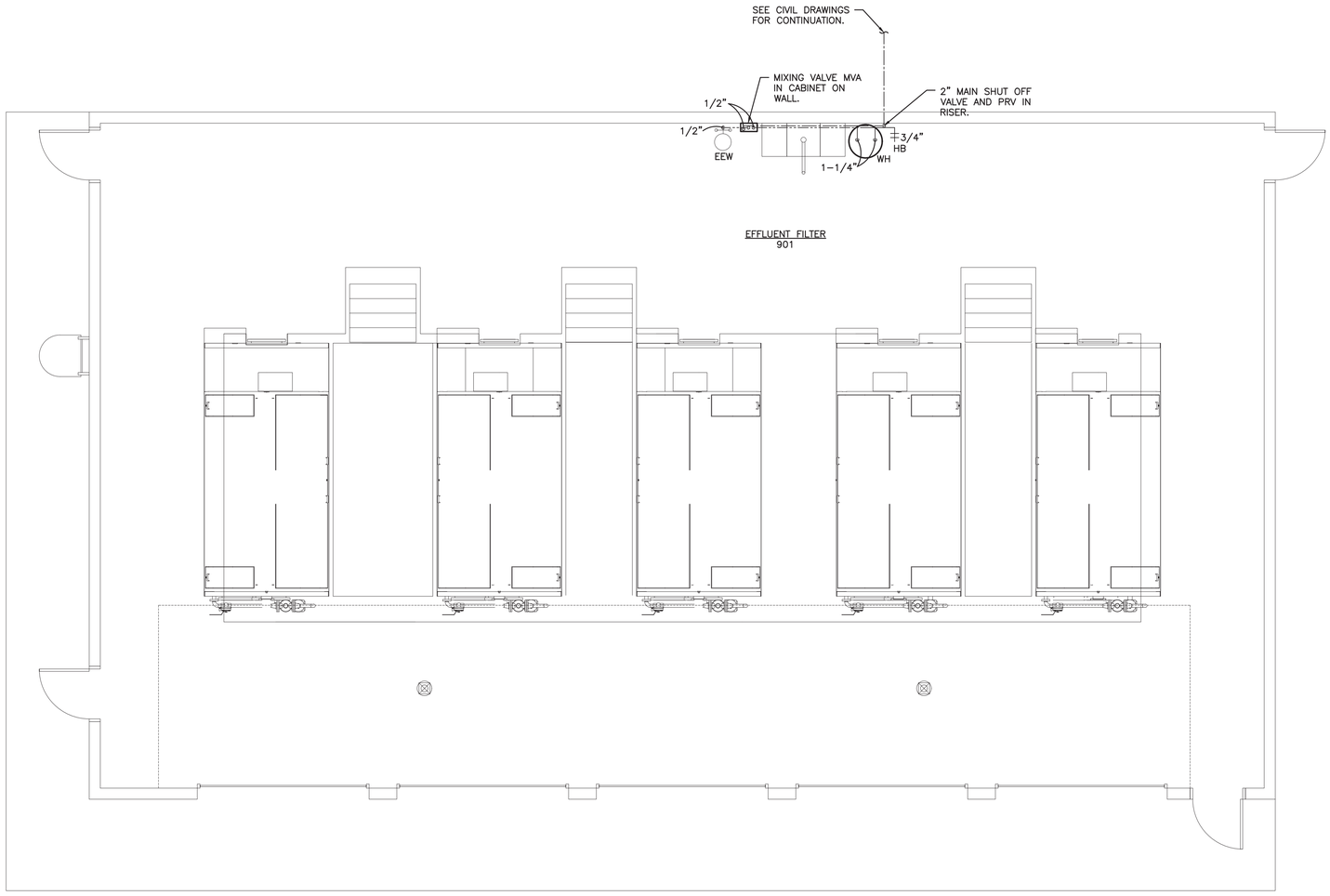

EFFLUENT BUILIDNG FLOOR PLAN - PLUMBING

SCALE: 1/4" = 1'-0"

PLUMBING FIXTURE SCHEDULE

NOTE: ALL FIXTURE APPURTENANCES SHALL BE SUPPLIED BY FIXTURE MANUFACTURER.

FIXTURE SYMBOL	FIXTURE TYPE	FIXTURE DESCRIPTION	CONNECTION SIZES			
			W	V	CW	HW
WH	WATER HEATER	LOCHINVAR MODEL #ETJ050KD, 50 GALLON ELECTRIC WATER HEATER WITH TWO (2) 4500 WATT ELEMENTS, 208 VOLT, SINGLE PHASE, NON-SIMULTANEOUS WIRING WITH 3 YEAR WARRANTY. FURNISH WITH A.S.M.E. APPROVED RELIEF VALVE & PROPER SIZED EXPANSION TANK.			3/4"	3/4"
MVA	MIXING VALVE	LAWLER THERMOSTATIC MIXING VAVLE MODEL 911 EMERGENCY EYEWASH UNIT NO. 84909 P.C. TO PROVIDE INLET CHECK VALVES AND ISOLATION VALVES, DIAL THEMOMETER ON OUTLET, BRONZE VALVE FINISH, STAINLESS STEEL LOCKABLE CABINET, FACTORY SET POINT AT 85°F PER ANSI Z358.1, 60°F-100°F.			1/2"	1/2"
HB	HOSE BIBB	WOODFORD MODEL 24P-3/4 WALL FAUCET WITH WHEEL HANDLE AND VACUUM BREAKER BACKFLOW PREVENTER, VERIFY MOUNTING HEIGHT.				3/4"
EEW	EMERGENCY EYEWASH	BRADLEY MODEL S19314BFSS EMERGENCY EYE WASH DRENCH SHOWER. ALL STAINLESS STEEL, VERIFY LEFT HAND MOUNT WITH OWNER & CABINETS. MOUNT MIXING VALVE AT EWS AND SET TO TEPID TEMPERATURE PER ANSI Z358.1-2014.				1.25"

ACCEPTABLE MANUFACTURERS:

WATER HEATERS - STATE, BOCK, LOCHINVAR, BRADFORD WHITE, A.O. SMITH, RHEEM.

HOSE BIBBS - ZURN, WOODFORD, NIBCO, PRIER.

FLOOR DRAINS, ROOF DRAINS, FLOOR SINKS - WADE, SMITH, ZURN, JOSAM, SIOUX CHIEF, WATTS DRAINAGE, MIFAB.

MIXING VALVES - SYMMONS, LAWLER, WATTS, BRADLEY, POWERS.

EMERGENCY EYE WASH/SHOWERS - BRADLEY, GUARDIAN, HAWS, SPEAKMAN

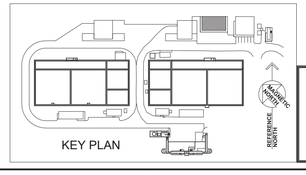

KEY PLAN

061318RB172000

BRITTAIN ENGINEERING, INC.
CONSULTING MECHANICAL AND ELECTRICAL ENGINEERS
PO BOX 939 HICKORY, NC 28603
TEL (828) 328-1813 FAX (828) 328-1814

FINAL DRAWINGS - NOT RELEASED FOR CONSTRUCTION

WK DICKSON
community infrastructure consultants
616 COLONNADE DRIVE
CHARLOTTE, NC 28205
(t)704-334-5348
(f)704-334-0078
WWW.WKDICKSON.COM
NC LICENSE NO.F-0374

NORTH CAROLINA PROFESSIONAL SEAL 7883 ENGINEER DANIEL DEWITT RABB 10/9/18

PROFESSIONAL SEAL

REVISION RECORD

NO.	DATE	DESCRIPTION	BY
A	10/9/18	ISSUE FOR OWNER/NCDEQ REVIEW	CRF

PROJECT NAME: KILLIAN CREEK WWTP PHASE 3 UPGRADE

DRAWING TITLE: EFFLUENT BUILDING PLUMBING

PROJ. MGR.:	CRF
DESIGN BY:	DRB
DRAWN BY:	RNB
PROJ. DATE:	SEPT. 2018
DRAWING NUMBER:	9-P.1
WKD PROJ. NO.:	20170294.00.CL

COPYRIGHT ©, W.K. DICKSON & CO., INC. ALL RIGHTS RESERVED. REPRODUCTION OR USE OF THE CONTENTS OF THIS DOCUMENT, ADDITIONS OR DELETIONS TO THIS DOCUMENT, IN WHOLE OR IN PART, WITHOUT WRITTEN CONSENT OF W.K. DICKSON & CO., INC. IS PROHIBITED. ONLY COPIES FROM THE ORIGINAL OF THIS DOCUMENT, MARKED WITH AN ORIGINAL SIGNATURE AND SEAL SHALL BE CONSIDERED TO BE VALID, TRUE COPIES.

MECHANICAL SPECIFICATIONS

GENERAL CONDITIONS: THE GENERAL CONDITIONS OF THE CONSTRUCTION CONTRACT AND SUPPLEMENTAL GENERAL CONDITIONS BOUND WITH THE ADVERTISEMENT FOR BIDS, INSTRUCTIONS TO BIDDERS AND BID FORMS APPLY TO ALL CONTRACTS AND ARE HEREBY MADE A PART OF THE MECHANICAL CONTRACT SPECIFICATIONS.

DESCRIPTION OF WORK: FURNISH ALL LABOR, SUPERVISION, MATERIALS, EQUIPMENT AND TOOLS NECESSARY TO INSTALL COMPLETE AIR CONDITIONING SYSTEMS IN THE BUILDING.

DRAWINGS: THE CONTRACTOR SHALL FURNISH AND INSTALL ALL EQUIPMENT AND MATERIALS SHOWN IN THESE DRAWINGS AND DESCRIBED IN THESE SPECIFICATIONS. ALL MISCELLANEOUS MATERIAL AND HARDWARE NECESSARY FOR COMPLETE OPERATING SYSTEMS IN ACCORDANCE WITH GOOD TRADE PRACTICE AS IS OBVIOUSLY INTENDED SHALL BE FURNISHED AND INSTALLED AS THOUGH IT WERE SPECIFICALLY LISTED.

ELECTRICAL WORK: THE ELECTRICAL CONTRACTOR SHALL TAKE POWER FROM THE SOURCE AS CALLED FOR ON THE ACCOMPANYING DRAWINGS AND EXTEND THROUGH ELECTRICAL AND NECESSARY CONTROLS TO THE EQUIPMENT FURNISHED AND INSTALLED UNDER THIS CONTRACT. THE ELECTRICAL CONTRACTOR SHALL PROVIDE ALL WIRING FROM THE LOAD SIDE OF THE DISCONNECT THROUGH THE STARTER TO THE EQUIPMENT.

SEE ELECTRICAL PLANS FOR DEFINITION OF WIRING AND ELECTRICAL FACILITIES TO BE INSTALLED UNDER THE ELECTRICAL CONTRACT.

ALL ELECTRICAL WORK SHALL BE DONE BY OR UNDER THE DIRECT SUPERVISION OF A LICENSED ELECTRICIAN, LICENSED IN THE STATE WHERE THE WORK WILL BE PERFORMED. ALL ELECTRICAL WORK SHALL BE IN ACCORDANCE WITH THE LATEST EDITION OF THE NATIONAL ELECTRICAL CODE AND ALL ADDENDA THERETO.

ALL CONTROL VOLTAGE SHALL BE SINGLE PHASE, 120 VOLTS OR LESS AND SHALL FEED FROM ONE (1) THERMAL OVERLOAD TYPE TOGGLE BREAKER.

ALL CONTROL WIRING SHALL BE RUN IN CONDUIT.

ALL STARTERS SHALL BE FURNISHED BY THE MECHANICAL CONTRACTOR AND INSTALLED BY THE ELECTRICAL CONTRACTOR.

THE MECHANICAL CONTRACTOR SHALL BE RESPONSIBLE FOR ALL CONTROL AND INTERLOCK WIRING 120 VOLTS AND LESS.

SEISMIC RESTRAINT – THIS BUILDING IS IN SEISMIC DESIGN CATEGORY (DESIGNER TO DETERMINE A, B, C OR D). ALL EQUIPMENT, DUCTWORK AND PIPING FURNISHED AND INSTALLED UNDER THIS CONTRACT SHALL BE SEISMICALLY RESTRAINED AS REQUIRED BY CHAPTER 16, STRUCTURAL DESIGN, IN THE NORTH CAROLINA BUILDING CODE, 2012 EDITION. SPECIFIC ATTENTION SHALL BE GIVEN TO SECTION 1613, EARTHQUAKE LOADS. THE MECHANICAL CONTRACTOR SHALL INCLUDE IN HIS/HER BID PRICE THE COST TO ACCOMPLISH ALL REQUIREMENTS OF THE AFOREMENTIONED CODE.

SHEET METAL WORK: THIS CONTRACTOR SHALL FURNISH ALL DUCTWORK AND ASSOCIATED SHEET METAL WORK AS CALLED FOR ON THE DRAWINGS AND REQUIRED FOR A COMPLETE DUCTED AIR DISTRIBUTION SYSTEM.

DUCTWORK SHALL BE FABRICATED AND INSTALLED IN ACCORDANCE WITH BEST PRACTICES OF SHEET METAL WORK AND SMACNA STANDARDS.

ALL DUCTWORK SHALL BE GALVANIZED SHEET IRON THROUGHOUT EXCEPT WHERE OTHERWISE SHOWN AND FABRICATED IN ACCORDANCE WITH THE FOLLOWING TABLE (ALL DUCT SIZES ON CONTRACT DRAWINGS ARE SHEET METAL FABRICATION SIZES EXCEPT WHERE LINER IS REQUIRED):

THE FOLLOWING CHART IS BASED ON 1" W.G. (MAXIMUM) STATIC, POSITIVE OR NEGATIVE PRESSURE. SEE SMACNA MANUAL FOR DUCT CONSTRUCTION FOR HIGHER STATIC PRESSURES.

MAXIMUM DIMENSION OF DUCT	GAUGE U.S. STD.	TRANSVERSE JOINT	BRACING
UP TO 12"	26	DRIVE SLIPS 7'–10" CENTERS	NONE
13" TO 30"	24	DRIVE SLIPS 7'–10" CENTERS	1"X1"X1/8" ANGLES 4 FEET FROM JOINT

DUCTMATE INDUSTRIES, INC. SYSTEMS MAY BE USED FOR TRANSVERSE JOINTS WITH THE FOLLOWING LIMITATIONS:
SYSTEM "25" – SHEETMETAL GAUGES 22 THROUGH 26
SYSTEM "35" – SHEETMETAL GAUGES 18 THROUGH 24
SYSTEM "45" – SHEETMETAL GAUGES 14 THROUGH 20
MANUFACTURER'S RECOMMENDATIONS SHALL BE FOLLOWED WITHOUT EXCEPTION.

ALL DUCTS SHALL HAVE FLAT LOCK TYPE LONGITUDINAL SEAMS CONFORMING TO SMACNA STANDARDS.
ALL DUCTS SHALL HAVE SECTIONS "CROSS–BROKEN" AND SHALL BE INSTALLED WITH NECESSARY STIFFENERS TO INSURE DUCTS AGAINST VIBRATING OR BREATHING.

ROOF CURBS:
ANY AND ALL REQUIRED ROOF CURBS SHALL BE INSTALLED WITH EQUIPMENT MATING SURFACE LEVEL. M.C. SHALL PROVIDE SLOPED ROOF CURBS WHERE REQUIRED FOR SLOPED ROOF INSTALLATIONS. M.C. SHALL INSTALL AND LEVEL CURBS PRIOR TO FINAL ROOF INSTALLATION TO ALLOW ROOFING CONTRACTOR TO FLASH AND SEAL CURB TO ROOF.

DUCT SUPPORTS
ROUND DUCTS – DUCTS UP TO 26" IN DIAMETER – ONE (1) STRAP AND BAND 1" WIDE BY 18 GAUGE, MAXIMUM SPACING 8'–0". DUCTS OVER 26" IN DIAMETER– A 1 ½ " WIDE BY 16 GAUGE BAND AND TWO 3/8" HANGER RODS, MAXIMUM SPACING 8'–0".
RECTANGULAR DUCTS – DUCTS UP TO 24" WIDE – TWO (2) STRAPS, 1" WIDE BY 18 GAUGE, MAXIMUM SPACING 8'–0". DUCTS OVER 24" WIDE – TRAPEZE TYPE HANGER WITH ANGLE IRON AND TWO (2) RODS PER SMACNA MANUAL. DO NOT USE ANGLE LESS THAN 1 ½"x 1 ½"x 1/8" OR RODS LESS THAN 3/8", EVEN THOUGH SMALLER SIZES MAY BE ALLOWED IN THE SMACNA TABLES. SIZES GIVEN ABOVE DO NOT ALLOW FOR EXTERNAL LOADS OTHER THAN INSULATION, NORMAL REINFORCEMENT & TRAPEZE WEIGHT. SMACNA TABLES SHALL BE USED WHEREVER SMACNA REQUIREMENTS ARE MORE STRINGENT THAN LISTED ABOVE. ALL STRAP AND ROD FASTENERS SHALL BE LOAD RATED. ALL HANGERS SHALL BE PROPERLY SECURED TO THE BUILDING STRUCTURE AS DETAILED IN THE SMACNA MANUAL.

UNLESS OTHERWISE SPECIFIED, FURNISH AND INSTALL ALL NECESSARY LINTELS, PROPERLY SIZED, SHEET METAL SLEEVES AND ESCUTCHEON COLLARS WHERE DUCTWORK RISES THROUGH FLOORS OR PASSES THROUGH WALLS OR CEILINGS.

MANUAL VOLUME CONTROL DAMPERS IN ROUND BRANCH DUCTS TO DIFFUSERS OR GRILLES SHALL BE FACTORY FABRICATED AND EQUAL TO YOUNG REGULATOR CO. SERIES 5020 WITH MODEL 403 LOCKING LEVER REGULATOR FOR UN–INSULATED DUCT, AND MODEL 443B FOR INSULATED DUCT.

MANUAL VOLUME CONTROL DAMPERS IN RECTANGULAR BRANCH DUCTS SHALL BE FACTORY FABRICATED AND EQUAL TO YOUNG REGULATOR CO. SERIES 820 WITH MODEL 403 LOCKING LEVER REGULATOR FOR UN–INSULATED DUCT, AND MODEL 443B FOR INSULATED DUCT.

VOLUME EXTRACTORS EQUAL TO TUTTLE & BAILEY, MODEL AVLR, SHALL BE USED AT BRANCH DUCTS WHERE RADIUS TAKEOFFS AND SPLITTER DAMPERS ARE NOT USED.

FURNISH AND INSTALL FLEXIBLE COLLARS IN THE DUCTWORK CONNECTIONS TO AIR HANDLING FANS TO PREVENT NOISE TRANSMISSION BETWEEN SECTIONS. FABRIC SHALL BE VENTGLAS AS MANUFACTURED BY VENTFABRICS.

CHANGES IN DUCT DIRECTION SHALL BE ACCOMPLISHED BY LONG RADIUS ELBOWS. MITERED ELBOWS SHALL HAVE AIRFOIL TURNING VANES EQUAL TO TUTTLE & BAILEY "DUCTURNS".

ALL JOINTS SHALL BE SEALED PER 603.9 (NORTH CAROLINA 2012 MECHANICAL CODE) AND 803.2.8 (NORTH CAROLINA ENERGY CODE). HOWEVER, PRESSURE SENSITIVE TAPE SHALL NOT BE THE ONLY METHOD OF SEALANT.

PIPING:
CONDENSATE DRAIN PIPING: CONDENSATE DRAIN PIPING SHALL BE TYPE "L" HARD DRAWN COPPER PIPING WITH CAST AND/OR WROUGHT COPPER FITTINGS PER ASTM B–88, 95/5 SOLDER.

REFRIGERATION PIPING: ALL REFRIGERATION PIPING FROM THE AIR COOLED CONDENSERS TO THE REFRIGERANT COIL SHALL BE TYPE "L" HARD DRAWN COPPER PER ASTM B–88. ALL FITTINGS AND JOINTS SHALL BE MADE WITH SILVER–FOS SOLDER. PROVIDE STRAINER–DRYER COMBINATION AND LIQUID SOLENOID VALVES AT REFRIGERANT COIL. THERMOSTATIC EXPANSION VALVES AND ALL ACCESSORIES SHALL BE EQUAL TO ALCO, INC., OR APPROVED EQUAL. PROVIDE AND INSTALL DISTRIBUTORS EQUAL TO ALCO, INC., SUITABLE FOR MODULATING FLOW RATES.

PROVIDE SPECIALTIES SUCH AS SERVICE VALVES, SOLENOID VALVES, SIGHT GLASSES, AND FILTER/DRYERS AS INDICATED AND REQUIRED FOR PROPER SYSTEM OPERATION. COMPONENTS SHALL BE SPECIFICALLY DESIGNED FOR REFRIGERATION SERVICE.

REFRIGERANT PIPING SHALL BE TESTED ACCORDING TO SECTION 1108 OF THE NORTH CAROLINA MECHANICAL CODE, 2012 EDITION.

PIPING ACCESSORIES GENERAL: FLANGES SHALL BE SLIP–ON OR BUTT WELDING STANDARD WEIGHT 1/16" RAISED FACE TYPE WITH GASKETS.

UNIONS SHALL BE ALL BRONZE FOR COPPER SYSTEMS AND MALLEABLE IRON WITH GROUND JOINT FOR STEEL PIPING SYSTEMS. PROVIDE DIELECTRIC UNIONS FOR JOINING DISSIMILAR METALLIC PIPING SYSTEMS.

WELDOLETS AND THREADOLETS SHALL BE STEEL PER ANSI B16.9.

ESCUTCHEONS SHALL BE SINGLE PIECE, SET SCREW TYPE, CHROME PLATED AND SHALL COVER THE OPENING AND SLEEVE.

COPPER PIPING

NOMINAL PIPE SIZE (MAXIMUM)	HANGER SPACE
UP TO 1 1/4"	6'–0"
1–1/2" TO 2"	10'–0"
LARGER THAN 2"	12'–0"

MAXIMUM VERTICAL SPACING 10'–0"

PLASTIC PVC PIPING

NOMINAL PIPE SIZE (MAXIMUM)	HANGER SPACING
ALL SIZES	4'–0"

MAXIMUM VERTICAL SPACING 10'–0" WITH MID–STORY GUIDE

VERTICAL LINES SHALL BE ADEQUATELY SUPPORTED AT THEIR BASES, EITHER BY A SUITABLE HANGER PLACED IN THE HORIZONTAL LINE NEAR THE RISER, OR BY A BASE FITTING SET ON A PEDESTAL OR FOUNDATION AND FROM EACH FLOOR SLAB BY MEANS OF APPROVED CLAMP TYPE SUPPORT BEARING OR THE SLAB OR BEAM.

HANGERS FOR PIPING 2" AND SMALLER SHALL BE OF THE SPLIT CAST RING TYPE WITH FASTENING DEVICE. HANGERS FOR PIPING LARGER THAN 2" SHALL BE OF THE ADJUSTABLE CLEVIS HANGER TYPE. HANGER RODS SHALL BE MINIMUM 3/8" DIAMETER AND SHALL HAVE MACHINE THREADS. BRACKETS OF APPROVED TYPE MAY BE USED ALONG WALLS. HANGER RODS FOR INDIVIDUALLY SUSPENDED HORIZONTAL PIPES SHALL BE STEEL RODS OF SIZE INDICATED ON THE FOLLOWING TABLE:

NOMINAL PIPE SIZE (MAXIMUM)	ROD SIZE
1/2" TO 2"	3/8"
2–1/2" TO 3"	1/2"
4"	5/8"
5" TO 6"	3/4"
8" TO 12"	7/8"

HANGERS FOR USE WITH COPPER PIPING SHALL BE COPPER PLATED FERROUS SIZES FOR COPPER TUBING.

HANGERS SHALL BE INSTALLED WITHIN 2'–0" OF EACH CHANGE IN DIRECTION, EITHER VERTICAL OR HORIZONTAL, OR PIPE TEE AND ON EACH SIDE OF VALVES, STRAINERS, ETC.

MULTIPLE HORIZONTAL PIPES, SMALLER THAN 12" DIAMETER PIPE, MAY BE SUPPORTED ON TRAPEZE HANGERS. TRAPEZE SPACING SHALL BE IN ACCORDANCE WITH THE SCHEDULE FOR PIPE SPACING BASED UPON THE SMALLEST PIPE. THE TRAPEZE MEMBERS SHALL BE PROPERLY SIZED FOR THE PIPING LOAD THEY ARE TO SUPPORT.

PIPE SUPPORTS SHALL BE AS MANUFACTURED BY MICHIGAN, GRINNELL OR F&S MANUFACTURING.

PIPING INSULATION:

THE CONTRACTOR SHALL COVER ALL PIPING AND APPARATUSES, AS SPECIFIED BELOW, WITH INSULATION AS MANUFACTURED BY KNAUF FIBER GLASS, JOHNS–MANVILLE, OWENS–CORNING OR EQUAL. ALL INSULATION, JACKET, FACING AND ADHESIVE SHALL HAVE COMPOSITE RATINGS NOT EXCEEDING FLAME SPREAD OF 25 AND SMOKE DEVELOPMENT OF 50.

PIPING INSULATION CONDUCTIVITY:
FIBERGLASS INSULATION THICKNESS FOR BOTH HEATING AND CHILLED WATER PIPING IS BASED ON INSULATION HAVING A CONDUCTIVITY NOT EXCEEDING 0.27 BTU PER INCH/H / SQUARE FOOT / DEGREE F.

PIPE INSULATION FITTINGS:
PIPE INSULATION FITTINGS SHALL BE EQUAL TO SPEEDLINE SMOKE SAFE PVC INSULATED FITTING COVERING SYSTEM. PVC JACKET AND FIBERGLASS INSULATION SHALL HAVE A FLAME SPREAD VALUE OF 25 OR LESS AND SMOKE DEVELOPED VALUE OF 50 OR LESS.

CONDENSATE DRAIN PIPING:
CONDENSATE DRAIN PIPING FROM AIR CONDITIONING UNITS THAT RUNS OUTSIDE OF FAN HOUSING SHALL BE INSULATED WITH 3/4" THICK ARMAFLEX INSULATION WITH ALL JOINTS GLUED AND TAPED. AUXILIARY CONDENSATE DRAIN PANS SHALL BE PROVIDED IN ACCORDANCE WITH SECTION 307.2.3 OF THE NORTH CAROLINA MECHANICAL CODE.

REFRIGERANT PIPING:
INSULATE REFRIGERATION SUCTION LINE PIPING WITH 3/4" THICK ARMAFLEX INSULATION WITH ALL JOINTS SEALED AND TAPED.

ALUMINUM METAL JACKET:
ALL INSULATION EXPOSED TO THE WEATHER SHALL BE COVERED WITH 0.016 ALUMINUM JACKET. JACKET SHALL BE SEALED WATER TIGHT.

APPLICATION:
ENGAGE THE SERVICES OF A QUALIFIED INSULATION APPLICATOR TO FURNISH AND INSTALL ALL THE INSULATION REQUIRED FOR THE MECHANICAL EQUIPMENT, PIPING, ETC., SPECIFIED HEREIN.

NAME PLATES AND IDENTIFICATION: THIS CONTRACTOR SHALL FURNISH AND INSTALL NAME PLATES WITH ENGRAVED LETTERING TO IDENTIFY EACH ITEM OF EQUIPMENT, SWITCHES AND CONTROLS INSTALLED UNDER THIS CONTRACT.

NAME PLATE IDENTIFICATION SHALL CORRESPOND WITH IDENTIFICATION OF EACH PIECE OF EQUIPMENT ON THE CONTRACT DRAWINGS UNLESS OTHERWISE DIRECTED. NAME PLATES AND/OR IDENTIFICATION SHALL BE MADE AS MANUFACTURED BY SETON NAME PLATE COMPANY OR APPROVED EQUAL. NAME PLATES SHALL BE ENGRAVED RIGID PHENOLIC PLASTIC OR NONFERROUS METAL WITH 1/4 INCH HIGH LETTERING – "TAPEWRITER" LABELS WILL NOT BE ACCEPTED.

EACH AIR HANDLING UNIT SHALL BE IDENTIFIED WITH ITS CONTRACT DRAWING DESIGNATION AND THE AREA SERVED.

GAS PIPING SHALL BE IDENTIFIED BY A YELLOW LABEL WITH BLACK LETTERS INDICATING GAS AND THE PIPING SYSTEM PRESSURE. THE SYSTEM SHALL BE MARKED AT THE BEGINNING, ALL ENDS AND AT INTERVALS NOT EXCEEDING 5 FEET ALONG ITS EXPOSED LENGTH.

PIPING SYSTEMS SHALL HAVE DESIGNATION ON TWENTY (20) FOOT CENTERS, AND CLOSER WHERE REQUIRED, TO PROVIDE ADEQUATE IDENTIFICATION. MARKERS SHALL HAVE DIRECTION OF FLOW AND SERVICE INDICATION. MARKERS SHALL MEET ANSI COLOR CODE RECOMMENDATIONS.

STOP VALVES SHALL BE IDENTIFIED WHERE THEIR INTENDED PURPOSE IS NOT OBVIOUS. NUMBERS SHALL NOT BE USED TO IDENTIFY VALVES UNLESS A KEY TO THE NUMBERS IS LOCATED NEAR THE VALVES. BRASS VALVE TAGS AND CHAIN BY SETON OR EQUAL SHALL BE USED.

REGISTERS AND GRILLES: ALL REGISTERS AND GRILLES SHALL BE OF SIZE, STYLE AND CAPACITY CALLED FOR ON PLANS AND IN THE GRILLE SCHEDULE. PROVIDE RUBBER OR EXPANDED FOAM GASKETS COMPLETELY AROUND ALL REGISTER AND GRILLE FRAMES TO PREVENT AIR LEAKAGE BETWEEN GRILLE FRAME AND DUCT OR BETWEEN GRILLE FRAME AND SURROUNDING FINISHED SURFACE.

ALL REGISTERS AND GRILLES LOCATED IN CEILINGS SHALL HAVE A FACTORY APPLIED FLAT "OFF" WHITE FINISH. ALL OTHERS SHALL HAVE FACTORY APPLIED PRIMER SUITABLE FOR FIELD FINISH PAINTING UNLESS OTHERWISE SHOWN IN THE AIR DISTRIBUTION DEVICE SCHEDULE.

EACH AIR DISTRIBUTION DEVICE LOCATED BELOW AN UNCONDITIONED SPACE SHALL BE PROVIDED WITH A 3" THICK, 3/4 POUND DENSITY INSULATION BLANKET FOR CONDENSATION CONTROL. ALL CEILING DEVICES SHALL BE FURNISHED TO BE COMPATIBLE WITH THE TYPE CEILING IN WHICH THE ARE INSTALLED.

TEST & BALANCING: TEST & BALANCING COVERS THE TESTING, BALANCING AND ADJUSTING OF ENVIRONMENTAL SYSTEMS INCLUDING BUT NOT LIMITED TO: HEATING, COOLING AND VENTILATION DISTRIBUTION SYSTEMS, HYDRONIC SYSTEMS, AND THE EQUIPMENT AND APPARATUS CONNECTED THERETO. THE WORK REQUIRED HEREIN SHALL CONSIST OF SETTING VOLUME (FLOW) AND SPEED ADJUSTING FACILITIES PROVIDED OR SPECIFIED FOR THE SYSTEM, RECORDING DATA, MAKING TESTS AND PREPARING REPORTS. APPARATUS AND DISTRIBUTION SYSTEMS SHALL BE TESTED AND BALANCED IN ACCORDANCE WITH THE LATEST EDITION OF NEBB PROCEDURAL STANDARDS FOR TESTING – BALANCING AND ADJUSTING OF ENVIRONMENTAL SYSTEMS PUBLISHED BY NEBB. TESTING AND BALANCING SHALL BE DONE BY AN INDEPENDENT TESTING AND BALANCING FIRM WITH AT LEAST TWO (2) YEARS VERIFIABLE EXPERIENCE. THE TESTING AND BALANCING FIRM SHALL BE CERTIFIED BY THE NATIONAL ENVIRONMENTAL BALANCING BUREAU (NEBB). CONTRACTOR SHALL FURNISH TO THE ENGINEER A COPY OF ALL DATA OBTAINED ON THE PROJECT.

OPERATING INSTRUCTIONS, CERTIFICATES AND WARRANTIES: THE ORIGINAL OF ALL INSPECTION CERTIFICATES SHALL BE DELIVERED TO THE OWNER AND ONE (1) COPY EACH TO THE ENGINEER PRIOR TO REQUEST FOR FINAL PAYMENT.

THREE (3) COPIES OF OPERATING AND MAINTENANCE INSTRUCTIONS AND MANUFACTURER'S WARRANTIES FOR ALL EQUIPMENT PROVIDED UNDER THIS CONTRACT SHALL BE PROVIDED TO THE OWNER PRIOR TO SUBMITTING REQUEST FOR FINAL PAYMENT.

PRIOR TO FINAL PAYMENT TO THE CONTRACT, THE CONTRACTOR SHALL BE RESPONSIBLE TO TRAIN THE AUTHORIZED PERSONNEL ON HOW TO SERVICE, START–UP AND SHUT–DOWN THE VARIOUS SECTIONS OF THE SYSTEM. UPON COMPLETION OF THIS PHASE OF THE CONTRACT, THE CONTRACTOR SHALL SECURE A LETTER OF ACCEPTANCE FROM THE OWNER THAT HE IS SATISFIED WITH THE CONDITIONS STIPULATED HEREIN. UPON ACCEPTANCE OF THIS LETTER AND AT THE DISCRETION OF THE ENGINEER, THE FINAL PAYMENT WILL BE MADE.

THE CONTRACTOR SHALL PROVIDE A WRITTEN GUARANTEE OF ALL MATERIALS AND WORKMANSHIP FOR A PERIOD OF ONE (1) YEAR FROM DATE OF SYSTEM ACCEPTANCE.

THE WORK UNDER THIS CONTRACT WILL BE ACCEPTED ONLY AS AN ENTIRE SYSTEM UPON SATISFACTORY COMPLETION OF THE REQUIRED TESTS. NO PARTIAL ACCEPTANCE OF ANY PART OR PORTION OF APPARATUS WILL BE MADE.

INSTALL AND CONNECT ALL EQUIPMENT IN ACCORDANCE WITH MANUFACTURER'S RECOMMENDATIONS AND DO ALL WORK IN A NEAT AND WORKMANLIKE MANNER AND IN ACCORDANCE WITH ACCEPTED GOOD PRACTICE AS JUDGED BY THE ENGINEER.

ALL EQUIPMENT AND PIPING SHALL BE SO INSTALLED THAT NO OBJECTIONABLE NOISES FROM EQUIPMENT, PIPING OR AIR DISTRIBUTION ARE AUDIBLE IN THE FINISHED AREAS.

GUARANTEE: THIS CONTRACTOR SHALL GUARANTEE ALL MATERIALS, EQUIPMENT AND WORKMANSHIP FOR ONE (1) YEAR FOLLOWING FINAL INSPECTION AND ACCEPTANCE OF THE BUILDING BY THE ENGINEER AND OWNER. THIS APPLIES TO ALL MATERIALS AND EQUIPMENT INSTALLED UNDER THIS CONTRACT, REGARDLESS OF SOURCE.

THE ONE (1) YEAR GUARANTEE PERIOD WILL START ON THE DAY OF FINAL INSPECTION AND ACCEPTANCE BY THE OWNER. THE CONTRACTOR SHALL PROVIDE THE ENGINEER A LETTER WITH TWO (2) COPIES STATING THE BEGINNING AND ENDING DATES OF THE GUARANTEE BASED ON THE AFOREMENTIONED STARTING DATES.

EXTENDED GUARANTEE: PROVIDE AN ADDITIONAL FOUR (4) YEAR GUARANTEE ON ALL COMPRESSORS BEYOND THE ABOVE MENTIONED ONE (1) YEAR GUARANTEE PERIOD.

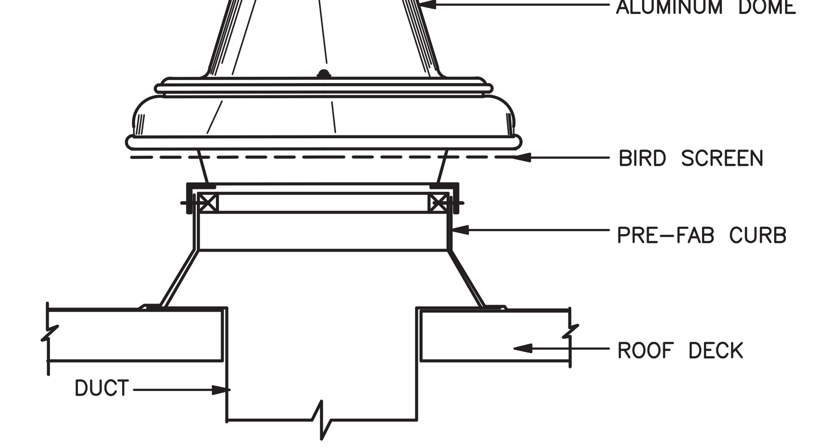

A ROOF EXHAUST FAN
SCALE: NTS

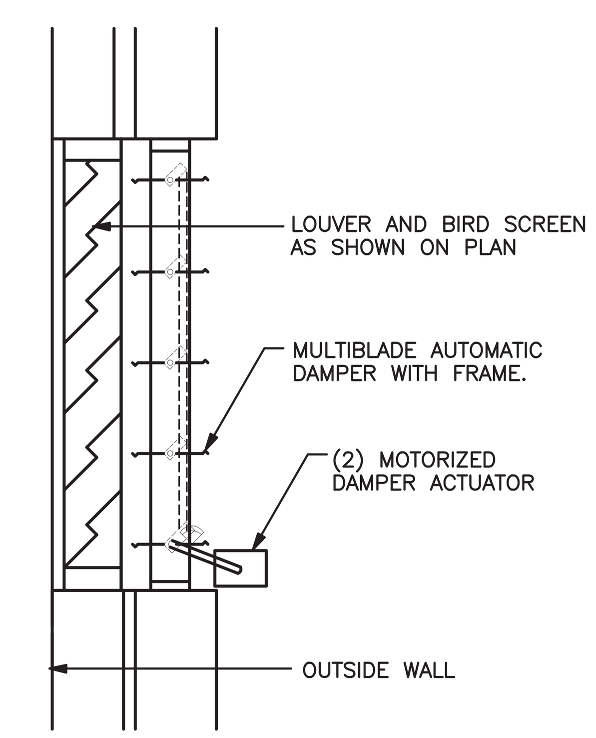

NOTE: REFER TO ARCHITECTURAL DRAWINGS FOR EXACT WALL TYPES.

B TYPICAL AIR INLET WITH AUTOMATIC DAMPER
SCALE: NTS

FINAL DRAWINGS - NOT RELEASED FOR CONSTRUCTION

WK DICKSON
community infrastructure consultants
616 COLONNADE DRIVE
CHARLOTTE, NC 28205
(t)704-334-5348
(f)704-334-0078
WWW.WKDICKSON.COM
NC LICENSE NO.F-0374

NORTH CAROLINA PROFESSIONAL SEAL 7883 ENGINEER DONALD R. BRITTAIN 09/23/19
PROFESSIONAL SEAL

REVISION RECORD

NO.	DATE	DESCRIPTION	BY
A	10/9/18	ISSUE FOR OWNER/NCDEQ REVIEW	CRF

PROJECT NAME: KILLIAN CREEK WWTP PHASE 3 UPGRADE

DRAWING TITLE: SPECIFICATIONS HVAC

PROJ. MGR.:	CRF
DESIGN BY:	DRB
DRAWN BY:	RNB
PROJ. DATE:	SEPT. 2018

DRAWING NUMBER: M0.1

WKD PROJ. NO.: 20170294.00.CL

060418RB172000

BRITTAIN ENGINEERING, INC.
CONSULTING MECHANICAL AND ELECTRICAL ENGINEERS
PO BOX 939 HICKORY, NC 28603
TEL. (828) 328-1813 FAX. (828) 328-1814

COPYRIGHT © 2018 DICKSON-CR, INC. ALL RIGHTS RESERVED. REPRODUCTION OR USE OF THIS CONTENT OR THE DOCUMENT, IN WHOLE OR IN PART, WITHOUT WRITTEN PERMISSION OF DICKSON IS PROHIBITED. ALL REPRODUCTIONS OR COPIES OF THE DOCUMENT MUST BEAR THE ORIGINAL SIGNATURE AND SEAL SHALL BE CONSIDERED TO BE VALID. FACE COPIES

MECHANICAL SYSTEMS, SERVICE SYSTEMS AND EQUIPMENT
METHOD OF COMPLIANCE

Prescriptive ● Energy Cost Budget ____

Climate Zone 4A
Exterior design conditions
winter dry bulb 18° F
summer dry bulb 93° F DB/74° F WB
Interior design conditions
winter dry bulb 72° F
summer dry bulb 75° F
relative humidity 50%
Building heating load N/A
Building cooling load N/A
Mechanical Spacing Conditioning System
Unitary
description of unit N/A – NONE
heating efficiency SEE SCHEDULES
cooling efficiency SEE SCHEDULES
heat output of unit SEE SCHEDULES
cooling output of unit SEE SCHEDULES
boiler
total boiler output. If oversized, state reason.
N/A
chiller
total chiller capacity. If oversized, state reason.
N/A
List equipment efficiencies N/A

Equipment schedules with motors (mechanical systems)
motor horsepower SEE SCHEDULES
number of phases SEE SCHEDULES
minimum efficiency PER NEMA STD MG 1–2003, TABLES 12–10 & 11
motor type ODP
# of poles 4

DESIGNER STATEMENT: [1]
To the best of my knowledge and belief, the design of this building complies with the mechanical systems, service systems and equipments of the North Carolina State Building Code, Energy Conservation Code, 2012 Edition.
SIGNED:
NAME: DONALD R. BRITTAIN
TITLE: NC PROFESSIONAL ENGINEER # 7883

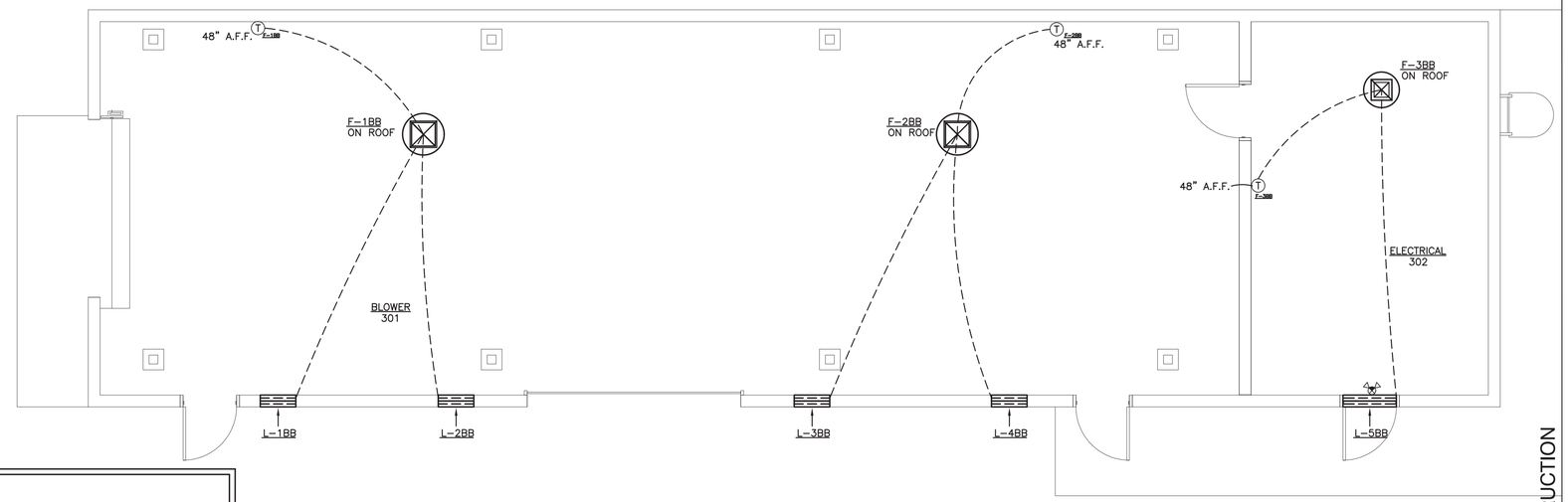

BLOWER BUILDING FLOOR PLAN - HVAC

SCALE: 1/4" = 1'-0"

FAN SCHEDULE

DESIG.	SERVES MOUNT	CFM	EXT. S.P.	RPM	WATTS H.P.	VOLTS PHASE	MFG./PART NO. GREENHECK	SONES	DRIVE	WGT LBS	ROOF OPENING	REMARKS
F-1BB	BLOWER ROOM	2,000	0.375	1549	1/2 HP	120V/1ø	G-133-VG	15.4	DIRECT	86	14.5"X14.5"	24" ROOF CURB, 120V BACKDRAFT DAMPER, NEMA 1 DISCONNECT SWITCH, BIRDSCREEN, ECM MOTOR W/ DIAL, LINE VOLTAGE THERMOSTAT ON WALL
F-2BB	BLOWER ROOM	2,000	0.375	1549	1/2 HP	120V/1ø	G-133-VG	15.4	DIRECT	86	14.5"X14.5"	24" ROOF CURB, 120V BACKDRAFT DAMPER, NEMA 1 DISCONNECT SWITCH, BIRDSCREEN, ECM MOTOR W/ DIAL, LINE VOLTAGE THERMOSTAT ON WALL
F-3BB	ELECTRICAL ROOM	400	0.375	1572	1/6 HP	120V/1ø	G-095-VG	8.9	DIRECT	52	12.5"X12.5"	24" ROOF CURB, 120V BACKDRAFT DAMPER, NEMA 1 DISCONNECT SWITCH, BIRDSCREEN, ECM MOTOR W/ DIAL, LINE VOLTAGE THERMOSTAT ON WALL

APPROVED MANUFACTURER'S: GREENHECK, LOREN COOK, AMERICAN COOLAIR.
NOTE: FAN SPEED SHALL NOT EXCEED RPM ON SCHEDULE.

LOUVER SCHEDULE

DESIG.	SIZE W X H	CFM	MANUFACTURER AND MODEL NO.	MATERIAL	FINISH	ACCESSORIES/ REMARKS
L-1BB	24" X 24"	1,000	GREENHECK EDD-401	ALUMINUM	KYNAR	(1)
L-2BB	24" X 24"	1,000	GREENHECK EDD-401	ALUMINUM	KYNAR	(1)
L-3BB	24" X 24"	1,000	GREENHECK EDD-401	ALUMINUM	KYNAR	(1)
L-4BB	24" X 24"	1,000	GREENHECK EDD-401	ALUMINUM	KYNAR	(1)
L-5BB	36" X 16"	750	GREENHECK EDD-401	ALUMINUM	KYNAR	(1)

APPROVED MANUFACTURER'S: GREENHECK, RUSKIN, POTTORFF,
(1) OPPOSED BLADE CONTROL DAMPER WITH BLADE AND JAMB SEALS, LINKAGE AND JACKSHAFTING, ELECTRIC MOTOR OPERATORS, 120 VOLTS, 1–PHASE, OPERATOR FRAME MOUNTING BRACKET, COLOR BY ARCHITECT, INTERLOCK W/ RESPECTIVE FAN

OUTSIDE AIR CALCULATIONS:

PER 2012 NORTH CAROLINA MECHANICAL CODE:

Vbz = Rp*Pz +Ra*Az
Vbz = OUTDOOR AIR RATE IN BREATHING ZONE
Az = FLOOR AREA OF SPACE
Pz = # PEOPLE IN SPACE
Rp = PEOPLE OUTDOOR AIR RATE
Ra = AREA OUTDOOR AIR RATE

BLOWER ROOM 301
1,302 S.F. X 20' HIGH = 26,040 C.F.
26,040 C.F. / 60 = 434 CFM/AIR CHANGE
434 CFM/AIR CHANGE X 10 AIR CHANGES/HOUR = 4,340 CFM
USE (2) 2,000 CFM EXHAUST FANS F-1BB & F-2BB FOR APPROX. 10 A.C./HOUR.

ELECTRICAL ROOM 302
279 S.F. X 20' HIGH = 5,580 C.F.
5,580 C.F. / 60 = 93 CFM/AIR CHANGE
93 CFM/AIR CHANGE X 10 AIR CHANGES/HOUR = 930 CFM
USE (1) 750 CFM EXHAUST FAN F-3BB FOR APPROX. 8 A.C./HOUR.

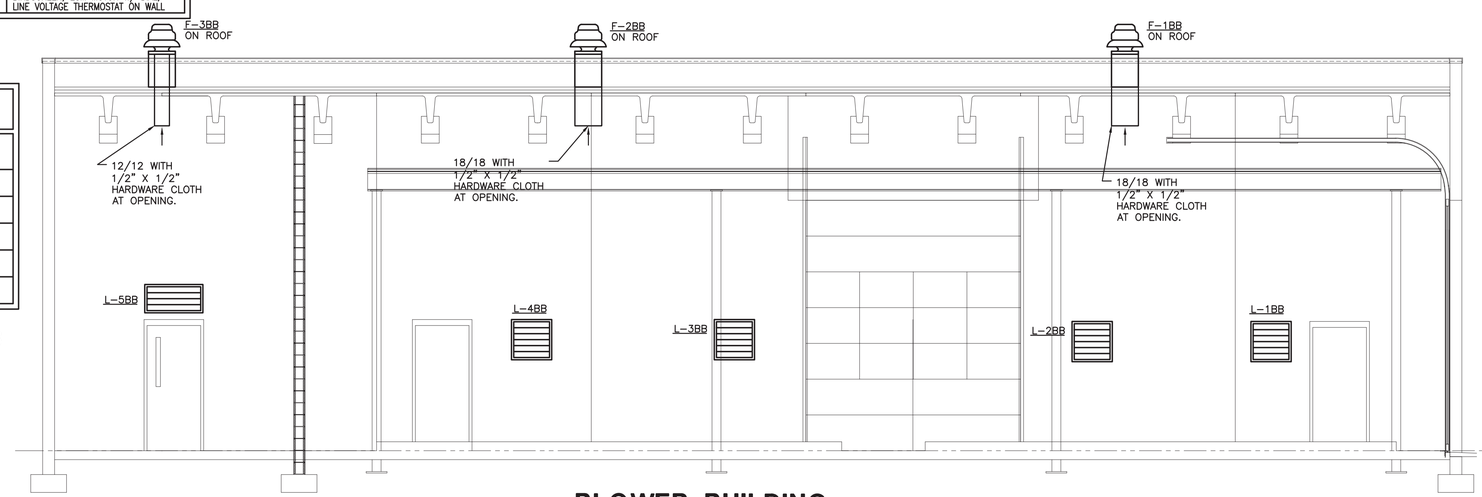

BLOWER BUILDING ELEVATION - HVAC

SCALE: 1/4" = 1'-0"

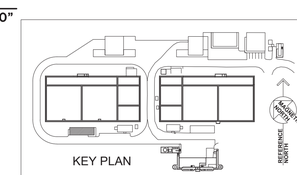

KEY PLAN

060518RB172000

BRITTAIN ENGINEERING, INC.
CONSULTING MECHANICAL AND ELECTRICAL ENGINEERS
PO BOX 939 HICKORY, NC 28603
TEL. (828) 328-1813 FAX. (828) 328-1814

FINAL DRAWINGS - NOT RELEASED FOR CONSTRUCTION

WK DICKSON
community infrastructure consultants
616 COLONNADE DRIVE
CHARLOTTE, NC 28205
(t)704-334-5348
(f)704-334-0078
WWW.WKDICKSON.COM
NC LICENSE NO.F-0374

NORTH CAROLINA PROFESSIONAL SEAL 7883 ENGINEER DONALD R. BRITTAIN 10/23/18
PROFESSIONAL SEAL

REVISION RECORD

NO.	DATE	DESCRIPTION	BY
A	10/9/18	ISSUE FOR OWNER/NCDEQ REVIEW	CRF

PROJECT NAME: KILLIAN CREEK WWTP PHASE 3 UPGRADE
DRAWING TITLE: BLOWER BUILDING HVAC

PROJ. MGR.:	CRF
DESIGN BY:	DRB
DRAWN BY:	RNB
PROJ. DATE:	SEPT. 2018

DRAWING NUMBER: 3.A-M.1
WKD PROJ. NO.: 20170294.00.CL

COPYRIGHT © WK DICKSON & CO. INC. ALL RIGHTS RESERVED. REPRODUCTION OR USE OF THE CONTENTS OF THIS DOCUMENT, ADDITIONS OR DELETIONS TO THIS DOCUMENT, IN WHOLE OR IN PART, WITHOUT WRITTEN CONSENT OF WK DICKSON & CO. INC. IS PROHIBITED. ONLY COPIES FROM THE ORIGINAL OF THIS DOCUMENT MARKED WITH AN ORIGINAL SIGNATURE AND SEAL SHALL BE CONSIDERED TO BE VALID, TRUE COPIES.

OUTSIDE AIR CALCULATIONS:

PER 2012 NORTH CAROLINA MECHANICAL CODE:

Vbz = Rp*Pz +Ra*Az
Vbz = OUTDOOR AIR RATE IN BREATHING ZONE
Az = FLOOR AREA OF SPACE
Pz = # PEOPLE IN SPACE
Rp = PEOPLE OUTDOOR AIR RATE
Ra = AREA OUTDOOR AIR RATE

EXISTING SLUDGE PUMP ROOM
NO CHANGE IN AREA OR LOAD. EXISTING EXHAUST FAN AND LOUVER TO REMAIN.

MECHANICAL SYSTEMS, SERVICE SYSTEMS AND EQUIPMENT
METHOD OF COMPLIANCE

Prescriptive ● Energy Cost Budget ____

Climate Zone 4A
Exterior design conditions
winter dry bulb 18° F
summer dry bulb 93° F DB/74° F WB
Interior design conditions
winter dry bulb 72° F
summer dry bulb 75° F
relative humidity 50%
Building heating load EXISTING
Building cooling load N/A
Mechanical Spacing Conditioning System
Unitary
description of unit EXISTING ELECTRIC UNIT HEATER
heating efficiency SEE SCHEDULES
cooling efficiency SEE SCHEDULES
heat output of unit SEE SCHEDULES
cooling output of unit SEE SCHEDULES
boiler
total boiler output. If oversized, state reason.
N/A
chiller
total chiller capacity. If oversized, state reason.
N/A
List equipment efficiencies N/A

Equipment schedules with motors (mechanical systems)
motor horsepower SEE SCHEDULES
number of phases SEE SCHEDULES
minimum efficiency PER NEMA STD MG 1-2003, TABLES 12-10 & 11
motor type ODP
# of poles 4

DESIGNER STATEMENT: [1]

To the best of my knowledge and belief, the design of this building complies with the mechanical systems, service systems and equipments of the North Carolina State Building Code, Energy Conservation Code, 2012 Edition.

SIGNED: [signature]
NAME: DONALD R. BRITTAIN
TITLE: NC PROFESSIONAL ENGINEER # 7883

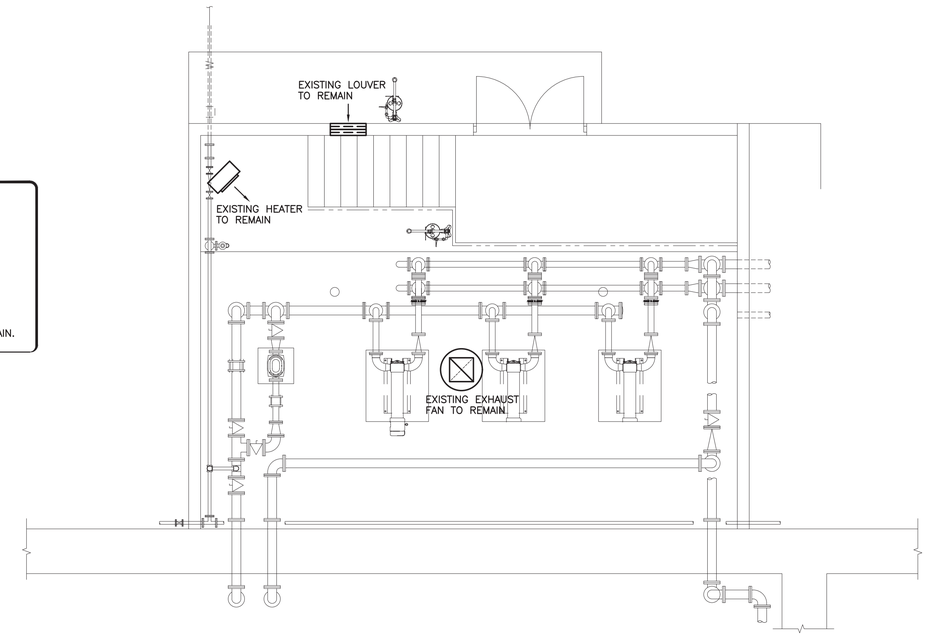

EXISTING SLUDGE PUMP BUILDING FLOOR PLAN - HVAC

SCALE: 1/4" = 1'-0"

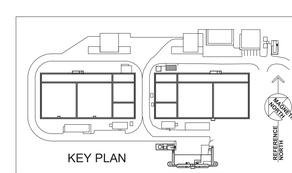

060418RB172000

BRITTAIN ENGINEERING, INC.
CONSULTING MECHANICAL AND ELECTRICAL ENGINEERS
PO BOX 939 HICKORY, NC 28603
TEL (828) 328-1813 FAX (828) 328-1814

FINAL DRAWINGS - NOT RELEASED FOR CONSTRUCTION

WK DICKSON
community infrastructure consultants
616 COLONNADE DRIVE
CHARLOTTE, NC 28205
(t)704-334-5348
(f)704-334-0078
WWW.WKDICKSON.COM
NC LICENSE NO.F-0374

NORTH CAROLINA PROFESSIONAL SEAL 7883 ENGINEER DONALD R. BRITTAIN 09/23/19
PROFESSIONAL SEAL

REVISION RECORD

NO.	DATE	DESCRIPTION	BY
A	10/9/18	ISSUE FOR OWNER/NCDEQ REVIEW	CRF

PROJECT NAME: KILLIAN CREEK WWTP PHASE 3 UPGRADE

DRAWING TITLE: EXISTING SLUDGE PUMP BUILDING HVAC

PROJ. MGR.:	CRF
DESIGN BY:	DRB
DRAWN BY:	RNB
PROJ. DATE:	SEPT. 2018

DRAWING NUMBER: 4-M.1

WKD PROJ. NO.: 20170294.00.CL

COPYRIGHT © 2012 DOCUMENT CA, INC. ALL RIGHTS RESERVED. REPRODUCTION OR USE OF THIS CONTENT OR THE DOCUMENT, ADDITIONS OR CHANGES TO THE CONTENT OR THE DOCUMENT WITHOUT WRITTEN AUTHORIZATION OF DOCUMENT CA, INC. IS PROHIBITED. PRINT THE CONTENT OF THIS DOCUMENT MARKED WITH AN ORIGINAL SIGNATURE AND SEAL SHALL BE CONSIDERED TO BE VALID. PRINT COPIES

MECHANICAL SYSTEMS, SERVICE SYSTEMS AND EQUIPMENT
METHOD OF COMPLIANCE

Prescriptive ● Energy Cost Budget ____

Climate Zone 4A
Exterior design conditions
- winter dry bulb 18° F
- summer dry bulb 93° F DB/74° F WB

Interior design conditions
- winter dry bulb 72° F
- summer dry bulb 75° F
- relative humidity 50%

Building heating load 32.4 MBH
Building cooling load N/A
Mechanical Spacing Conditioning System
- Unitary
  - description of unit ELECTRIC UNIT HEATER
  - heating efficiency SEE SCHEDULES
  - cooling efficiency SEE SCHEDULES
  - heat output of unit SEE SCHEDULES
  - cooling output of unit SEE SCHEDULES
- boiler
  - total boiler output. If oversized, state reason. N/A
- chiller
  - total chiller capacity. If oversized, state reason. N/A

List equipment efficiencies N/A

Equipment schedules with motors (mechanical systems)
- motor horsepower SEE SCHEDULES
- number of phases SEE SCHEDULES
- minimum efficiency PER NEMA STD MG 1–2003, TABLES 12–10 & 11
- motor type ODP
- # of poles 4

DESIGNER STATEMENT: [1]

To the best of my knowledge and belief, the design of this building complies with the mechanical systems, service systems and equipments of the North Carolina State Building Code, Energy Conservation Code, 2012 Edition.

SIGNED:
NAME: DONALD R. BRITTAIN
TITLE: NC PROFESSIONAL ENGINEER # 7883

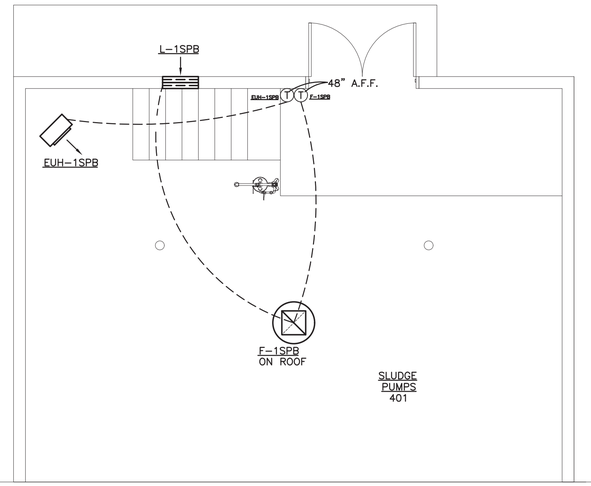

FAN SCHEDULE

DESIG.	SERVES MOUNT	CFM	EXT. S.P.	RPM	WATTS H.P.	VOLTS PHASE	MFG./PART NO. GREENHECK	SONES	DRIVE	WGT LBS	ROOF OPENING	REMARKS
F-1SPB	SLUDGE PUMPS	1,650	0.375	1330	1/2 HP	120V/1ø	G–133–VG	12.2	DIRECT	81	14.5"X14.5"	12" ROOF CURB, 120V BACKDRAFT DAMPER, NEMA 1 DISCONNECT SWITCH, BIRDSCREEN, ECM MOTOR W/ DIAL, LINE VOLTAGE THERMOSTAT ON WALL

APPROVED MANUFACTURER'S: GREENHECK, LOREN COOK, AMERICAN COOLAIR.
NOTE: FAN SPEED SHALL NOT EXCEED RPM ON SCHEDULE.

LOUVER SCHEDULE

DESIG.	SIZE W X H	CFM	MANUFACTURER AND MODEL NO.	MATERIAL	FINISH	ACCESSORIES/ REMARKS
L-1SPB	24" X 24"	1,650	GREENHECK EDD–401	ALUMINUM	KYNAR	(1)

APPROVED MANUFACTURER'S: GREENHECK, RUSKIN, POTTORFF.
(1) OPPOSED BLADE CONTROL DAMPER WITH BLADE AND JAMB SEALS, LINKAGE AND JACKSHAFTING, ELECTRIC MOTOR OPERATORS, 120 VOLTS, 1–PHASE, OPERATOR FRAME MOUNTING BRACKET, COLOR BY ARCHITECT, INTERLOCK W/ RESPECTIVE FAN

ELECTRIC UNIT HEATER SCHEDULE

UNIT NO.	SERVICE	CFM	△T °F	STAGES	KW	POWER	MANUFACTURER CATALOG NO.
EUH-1SPB	SLUDGE PUMP BUILDING	700	45	1	10.0	460V, 3PH	MARKEL 5100

APPROVED MANUFACTURER'S: MARKEL, TRANE, CHROMALOX, QMARK.
(1) WALL MOUNTED THERMOSTAT, CEILING MOUNTED BRACKET.

OUTSIDE AIR CALCULATIONS:

PER 2012 NORTH CAROLINA MECHANICAL CODE:

Vbz = Rp*Pz +Ra*Az
Vbz = OUTDOOR AIR RATE IN BREATHING ZONE
Az = FLOOR AREA OF SPACE
Pz = # PEOPLE IN SPACE
Rp = PEOPLE OUTDOOR AIR RATE
Ra = AREA OUTDOOR AIR RATE

SLUDGE PUMP ROOM 401
660 S.F. X 16' HIGH = 10,560 C.F.
10,560 C.F. / 60 = 176 CFM/AIR CHANGE
176 CFM/AIR CHANGE X 10 AIR CHANGES/HOUR = 1,760 CFM
USE (1) 1,650 CFM EXHAUST FAN F–1SPB FOR APPROX. 10 A.C./HOUR.

SLUDGE PUMP BUILDING FLOOR PLAN - HVAC

SCALE: 1/4" = 1'-0"

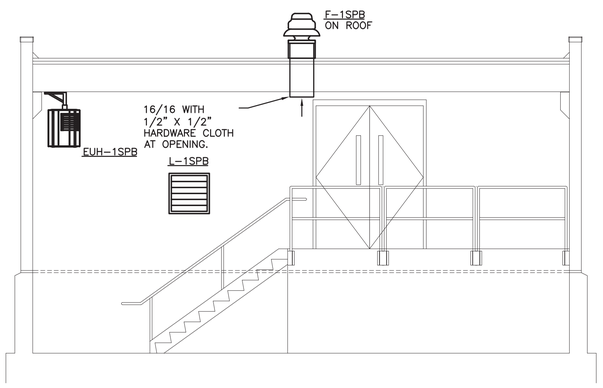

SLUDGE PUMP BUILDING ELEVATION - HVAC

SCALE: 1/4" = 1'-0"

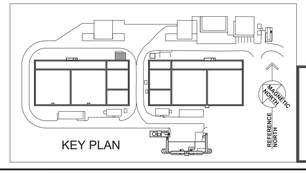

060418RB172000

BRITTAIN ENGINEERING, INC.
CONSULTING MECHANICAL AND ELECTRICAL ENGINEERS
PO BOX 939 HICKORY, NC 28603
TEL. (828) 328-1813 FAX. (828) 328-1814

FINAL DRAWINGS - NOT RELEASED FOR CONSTRUCTION

WK DICKSON
community infrastructure consultants
616 COLONNADE DRIVE
CHARLOTTE, NC 28205
(t)704-334-5348
(f)704-334-0078
WWW.WKDICKSON.COM
NC LICENSE NO.F-0374

NORTH CAROLINA PROFESSIONAL SEAL 7883 ENGINEER DONALD R. BRITTAIN 10/9/18
PROFESSIONAL SEAL

REVISION RECORD

NO.	DATE	DESCRIPTION	BY
A	10/9/18	ISSUE FOR OWNER/NCDEQ REVIEW	CRF

PROJECT NAME: KILLIAN CREEK WWTP PHASE 3 UPGRADE
DRAWING TITLE: SLUDGE PUMP BUILDING HVAC

PROJ. MGR.:	CRF
DESIGN BY:	DRB
DRAWN BY:	RNB
PROJ. DATE:	SEPT. 2018

DRAWING NUMBER: 4.A-M.1
WKD PROJ. NO.: 20170294.00.CL

COPYRIGHT © 2018 DICKSON & CO., INC. ALL RIGHTS RESERVED. REPRODUCTION OR USE OF THIS CONTENT OR THE DOCUMENT, IN WHOLE OR IN PART, WITHOUT WRITTEN PERMISSION OF DICKSON & CO., INC. IS PROHIBITED. ADDITIONS OR CHANGES TO THIS DOCUMENT MUST BE PRINTED ON THE ORIGINAL OF THIS DOCUMENT MARKED WITH AN ORIGINAL SIGNATURE AND SEAL SHALL BE CONSIDERED TO BE VALID. FACE COPIES

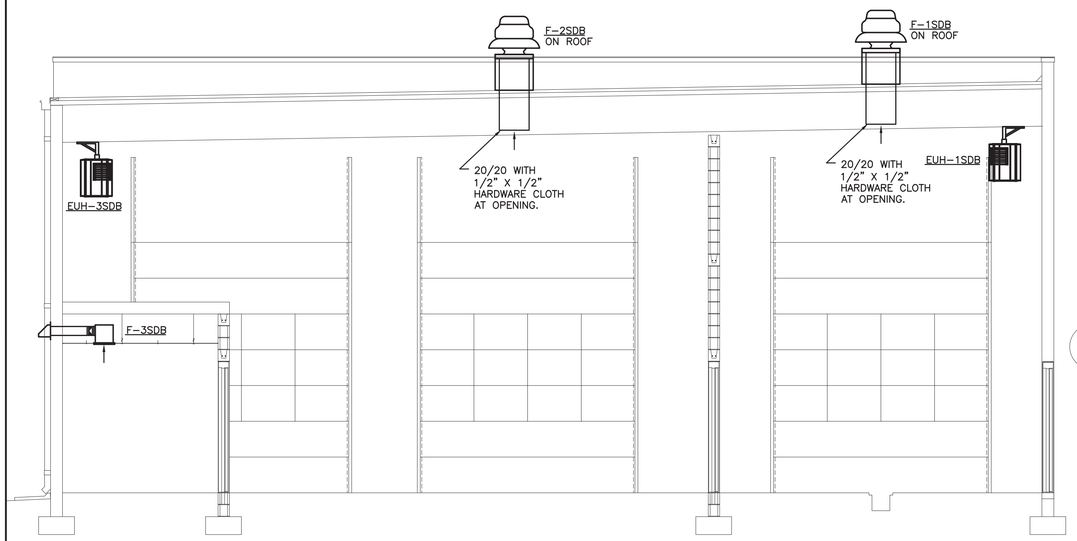

SLUDGE DEWATERING BUILDING ELEVATION - HVAC

SCALE: 1/4" = 1'-0"

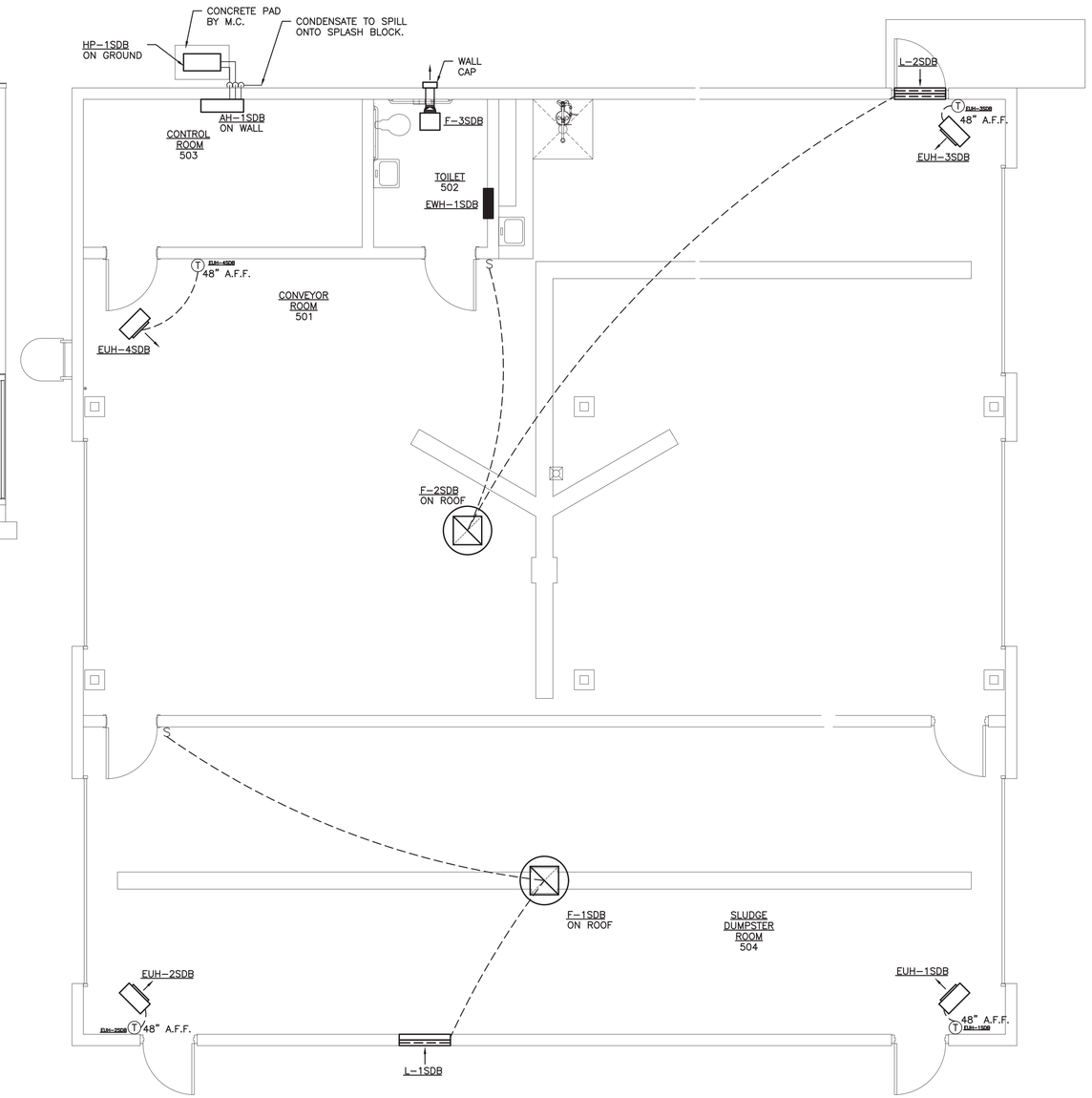

SLUDGE DEWATERING BUILDING FLOOR PLAN - HVAC

SCALE: 1/4" = 1'-0"

MECHANICAL SYSTEMS, SERVICE SYSTEMS AND EQUIPMENT METHOD OF COMPLIANCE

Prescriptive ● Energy Cost Budget ____

Climate Zone 4A
Exterior design conditions
winter dry bulb 18° F
summer dry bulb 93° F DB/74° F WB
Interior design conditions
winter dry bulb 72° F
summer dry bulb 75° F
relative humidity 50%
Building heating load 113.5 MBH
Building cooling load 5.0 MBH
Mechanical Spacing Conditioning System
Unitary
description of unit MINI-SPLIT HP, ELECTRIC UNIT HEATERS
heating efficiency SEE SCHEDULES
cooling efficiency SEE SCHEDULES
heat output of unit SEE SCHEDULES
cooling output of unit SEE SCHEDULES
boiler
total boiler output. If oversized, state reason.
N/A
chiller
total chiller capacity. If oversized, state reason.
N/A
List equipment efficiencies N/A

Equipment schedules with motors (mechanical systems)
motor horsepower SEE SCHEDULES
number of phases SEE SCHEDULES
minimum efficiency PER NEMA STD MG 1-2003, TABLES 12-10 & 11
motor type ODP
# of poles 4

DESIGNER STATEMENT: [1]

To the best of my knowledge and belief, the design of this building complies with the mechanical systems, service systems and equipments of the North Carolina State Building Code, Energy Conservation Code, 2012 Edition.

SIGNED:
NAME: DONALD R. BRITTAIN
TITLE: NC PROFESSIONAL ENGINEER # 7883

OUTSIDE AIR CALCULATIONS:

PER 2012 NORTH CAROLINA MECHANICAL CODE:

Vbz = Rp*Pz +Ra*Az
Vbz = OUTDOOR AIR RATE IN BREATHING ZONE
Az = FLOOR AREA OF SPACE
Pz = # PEOPLE IN SPACE
Rp = PEOPLE OUTDOOR AIR RATE
Ra = AREA OUTDOOR AIR RATE

SLUDGE DUMPSTER ROOM 504
576 S.F. X 22'-6" HIGH = 12,960 C.F.
12,960 C.F. / 60 = 215 CFM/AIR CHANGE
216 CFM/AIR CHANGE X 12 AIR CHANGES/HOUR = 2,292 CFM
USE (1) 3,000 CFM EXHAUST FAN F-1SDB FOR APPROX. 14 A.C./HOUR.

CONNECTOR ROOM 501
1,692 S.F. X 22' HIGH = 37,224 C.F.
37,224 C.F. / 60 = 620 CFM/AIR CHANGE
620 CFM/AIR CHANGE X 6 AIR CHANGES/HOUR = 3,720 CFM
USE (1) 3,000 CFM EXHAUST FAN F-2SDB FOR APPROX. 5 A.C./HOUR.

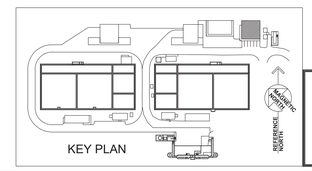

060418RB172000

BRITTAIN ENGINEERING, INC.
CONSULTING MECHANICAL AND ELECTRICAL ENGINEERS
PO BOX 939 HICKORY, NC 28603
TEL (828)328-1813 FAX (828)328-1814

FINAL DRAWINGS - NOT RELEASED FOR CONSTRUCTION

WK DICKSON
community infrastructure consultants
616 COLONNADE DRIVE
CHARLOTTE, NC 28205
(t)704-334-5348
(f)704-334-0078
WWW.WKDICKSON.COM
NC LICENSE NO.F-0374

NORTH CAROLINA PROFESSIONAL SEAL 7883 ENGINEER DONALD ROBERT TRAPP 10/23/18

PROFESSIONAL SEAL

REVISION RECORD

NO.	DATE	DESCRIPTION	BY
A	10/9/18	ISSUE FOR OWNER/NCDEQ REVIEW	CRF

PROJECT NAME: KILLIAN CREEK WWTP PHASE 3 UPGRADE

DRAWING TITLE: SLUDGE DEWATERING BUILDING HVAC

PROJ. MGR.:	CRF
DESIGN BY:	DRB
DRAWN BY:	RNB
PROJ. DATE:	SEPT. 2018

DRAWING NUMBER: 5.A-M.1

WKD PROJ. NO.: 20170294.00.CL

COPYRIGHT © 2017 DICKSON & CO., INC. ALL RIGHTS RESERVED. REPRODUCTION OR USE OF THIS CONTENT OR THE DOCUMENT, IN WHOLE OR IN PART, WITHOUT WRITTEN PERMISSION OF DICKSON & CO., INC. IS PROHIBITED. ADDITIONS OR CHANGES TO THIS DOCUMENT MUST BEAR THE OWNER'S OR THE DOCUMENT'S MARKED WITH AN ORIGINAL SIGNATURE AND SEAL SHALL BE CONSIDERED TO BE VALID. RUE COPIES

FAN SCHEDULE

DESIG.	SERVES MOUNT	CFM	EXT. S.P.	RPM	WATTS H.P.	VOLTS PHASE	MFG./PART NO. GREENHECK	SONES	DRIVE	WGT LBS	ROOF OPENING	REMARKS
F-1SDB	SLUDGE DUMPSTER	3,000	0.375	895	1/2 HP	460V/3ø	GB-180-VGD	10.2	DIRECT	86	20.5"X20.5"	24" ROOF CURB, 460V BACKDRAFT DAMPER, NEMA 1 DISCONNECT SWITCH, BIRDSCREEN, ECM MOTOR W/ DIAL, LINE VOLTAGE THERMOSTAT ON WALL
F-2SDB	CONNECTOR ROOM	3,000	0.375	895	1/2 HP	460V/3ø	GB-180-VGD	10.2	DIRECT	86	20.5"X20.5"	24" ROOF CURB, 460V BACKDRAFT DAMPER, NEMA 1 DISCONNECT SWITCH, BIRDSCREEN, ECM MOTOR W/ DIAL, LINE VOLTAGE THERMOSTAT ON WALL
F-3SDB	TOILET	100	0.25	1083	53 W	120V/1ø	SP-A125	1.2	DIRECT	20	N/A	WC-6 WALL CAP, BACKDRAFT DAMPER, DISCONNECT SWITCH, BIRDSCREEN, FACTORY MTD FSC

APPROVED MANUFACTURER'S: GREENHECK, LOREN COOK, AMERICAN COOLAIR.
NOTE: FAN SPEED SHALL NOT EXCEED RPM ON SCHEDULE.

MINI-SPLIT HEAT PUMP SCHEDULE

UNIT NUMBER		AH-1SDB	
AREA SERVED		CONTROL ROOM	
MANUFACTURER		DAIKIN	
MODEL NUMBER		FTXN09NMVJU	
UNIT WEIGHT		18 LBS	
FAN	TOTAL AIR CFM	286-406	
	POWER SUPPLY	208V/1ø/60	
COOLING COIL	FACE VELOCITY FPM	–	
	COIL AIR CFM	286-406	
	TOTAL CAPACITY COOLING	9,000 BTUH	
	SENSIBLE CAPACITY COOLING	8,010 BTUH	
	SEER	15.0	
	ENTERING AIR TEMP.	80.0 DB/67.0 WB	
FILTER	TYPE	WASHABLE	
	QUANTITY AND SIZE	–	
HEATING CAPACITY	ENTERING AIR TEMP.	75 °F	
	HIGH TEMPERATURE 47°F DB/43°F WB	9.0 MBH	
	LOW TEMPERATURE 17°F DB/15°F WB	5.7 MBH	
	COP	3.88	
	POWER SUPPLY	208V/1ø/60	
	MCA AMPS	1.0	
	MOP AMPS	15.0	
AIR COOLED CONDENSING UNIT	UNIT NUMBER	HP-1SDB	
	MODEL NUMBER	RXN09NMVJU	
	UNIT WEIGHT	55 LBS	
	ENTERING AIR TEMP.	95°F	
	FAN TYPE	PROPELLER	
	FAN H.P.	20 W	
	COMPRESSOR	INVERTER	
	POWER SUPPLY	208V/1ø/60	
	MCA AMPS	10.1	
	MOP AMPS	15.0	
ACCESSORIES			

(1) WIRE INDOOR UNIT FROM OUTDOOR UNIT, PROGRAMMABLE THERMOSTAT.

ELECTRIC UNIT HEATER SCHEDULE

UNIT NO.	SERVICE	CFM	△T °F	STAGES	KW	POWER	MANUFACTURER CATALOG NO.
EUH-1SDB	SLUDGE DEWATER BUILDING	700	34	1	7.5	460V, 3PH	MARKEL 5100
EUH-2SDB	SLUDGE DEWATER BUILDING	700	34	1	7.5	460V, 3PH	MARKEL 5100
EUH-3SDB	SLUDGE DEWATER BUILDING	700	45	1	10.0	460V, 3PH	MARKEL 5100
EUH-4SDB	SLUDGE DEWATER BUILDING	700	45	1	10.0	460V, 3PH	MARKEL 5100

APPROVED MANUFACTURER'S: MARKEL, TRANE, CHROMALOX, QMARK.
(1) WALL MOUNTED THERMOSTAT, CEILING MOUNTED BRACKET.

ELECTRIC WALL HEATER SCHEDULE

DESIG. NO.	SERVICE	CFM	RISE °F	STAGES	KW	POWER	MANUFACTURER & MODEL NO.
EWH-1SDB	TOILET 502	100	–	1	1.5	120V, 1PH	MARKEL E3055T2DWB

APPROVED MANUFACTURER'S: MARKEL, TRANE, CHROMALOX, QMARK.
(1) BUILT-IN THERMOSTAT, RECESSED WALL BOX.

LOUVER SCHEDULE

DESIG.	SIZE W X H	CFM	MANUFACTURER AND MODEL NO.	MATERIAL	FINISH	ACCESSORIES/ REMARKS
L-1SDB	36" X 30"	3,000	GREENHECK EDD-401	ALUMINUM	KYNAR	(1)
L-2SDB	36" X 30"	3,000	GREENHECK EDD-401	ALUMINUM	KYNAR	(1)

APPROVED MANUFACTURER'S: GREENHECK, RUSKIN, POTTORFF,
(1) OPPOSED BLADE CONTROL DAMPER WITH BLADE AND JAMB SEALS, LINKAGE AND JACKSHAFTING, ELECTRIC MOTOR OPERATORS, 460 VOLTS, 1-PHASE, OPERATOR FRAME MOUNTING BRACKET, COLOR BY ARCHITECT, INTERLOCK W/ RESPECTIVE FAN

FINAL DRAWINGS - NOT RELEASED FOR CONSTRUCTION

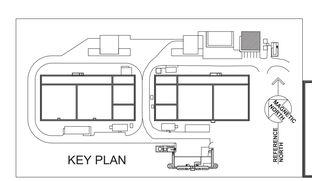

KEY PLAN

060418RB172000

BRITTAIN ENGINEERING, INC.
CONSULTING MECHANICAL AND ELECTRICAL ENGINEERS
PO BOX 939 HICKORY, NC 28603
TEL. (828) 328-1813 FAX. (828) 328-1814

WK DICKSON
community infrastructure consultants
616 COLONNADE DRIVE
CHARLOTTE, NC 28205
(t)704-334-5348
(f)704-334-0078
WWW.WKDICKSON.COM
NC LICENSE NO.F-0374

NORTH CAROLINA PROFESSIONAL SEAL 7883 ENGINEER DANIAL DRABERT BRITTAIN 10/23/18

PROFESSIONAL SEAL

REVISION RECORD

NO.	DATE	DESCRIPTION	BY
A	10/9/18	ISSUE FOR OWNER/NCDEQ REVIEW	CRF

PROJECT NAME: KILLIAN CREEK WWTP PHASE 3 UPGRADE

DRAWING TITLE: SLUDGE DEWATERING BUILDING HVAC SCHEDULES

PROJ. MGR.:	CRF
DESIGN BY:	DRB
DRAWN BY:	RNB
PROJ. DATE:	SEPT. 2018

DRAWING NUMBER: 5.A-M.2

WKD PROJ. NO.: 20170294.00.CL

COPYRIGHT © WK DICKSON & CO., INC. ALL RIGHTS RESERVED. REPRODUCTION OR USE OF THE CONTENT OF THIS DOCUMENT, ADDITIONS OR DELETIONS TO THIS DOCUMENT, IN WHOLE OR IN PART, WITHOUT WRITTEN CONSENT OF WK DICKSON & CO., INC., IS PROHIBITED. ONLY COPIES FROM THE ORIGINAL OF THIS DOCUMENT, MARKED WITH AN ORIGINAL SIGNATURE AND SEAL SHALL BE CONSIDERED TO BE VALID, TRUE COPIES.

OUTSIDE AIR CALCULATIONS:

PER 2012 NORTH CAROLINA MECHANICAL CODE:

Vbz = Rp*Pz +Ra*Az
Vbz = OUTDOOR AIR RATE IN BREATHING ZONE
Az = FLOOR AREA OF SPACE
Pz = # PEOPLE IN SPACE
Rp = PEOPLE OUTDOOR AIR RATE
Ra = AREA OUTDOOR AIR RATE

EXISTING EFFLUENT UV BUILDING.
NO CHANGE IN AREA OR LOAD. EXISTING EXHAUST FAN AND LOUVER TO REMAIN.

MECHANICAL SYSTEMS, SERVICE SYSTEMS AND EQUIPMENT
METHOD OF COMPLIANCE

Prescriptive ● Energy Cost Budget ____

Climate Zone 4A
Exterior design conditions
winter dry bulb 18° F
summer dry bulb 93° F DB/74° F WB
Interior design conditions
winter dry bulb 72° F
summer dry bulb 75° F
relative humidity 50%
Building heating load EXISTING
Building cooling load N/A
Mechanical Spacing Conditioning System
Unitary
description of unit EXISTING ELECTRIC UNIT HEATER
heating efficiency SEE SCHEDULES
cooling efficiency SEE SCHEDULES
heat output of unit SEE SCHEDULES
cooling output of unit SEE SCHEDULES
boiler
total boiler output. If oversized, state reason. N/A
chiller
total chiller capacity. If oversized, state reason. N/A
List equipment efficiencies N/A

Equipment schedules with motors (mechanical systems)
motor horsepower SEE SCHEDULES
number of phases SEE SCHEDULES
minimum efficiency PER NEMA STD MG 1-2003, TABLES 12-10 & 11
motor type ODP
# of poles 4

DESIGNER STATEMENT: [1]

To the best of my knowledge and belief, the design of this building complies with the mechanical systems, service systems and equipments of the North Carolina State Building Code, Energy Conservation Code, 2012 Edition.

SIGNED: [signature]
NAME: DONALD R. BRITTAIN
TITLE: NC PROFESSIONAL ENGINEER # 7883

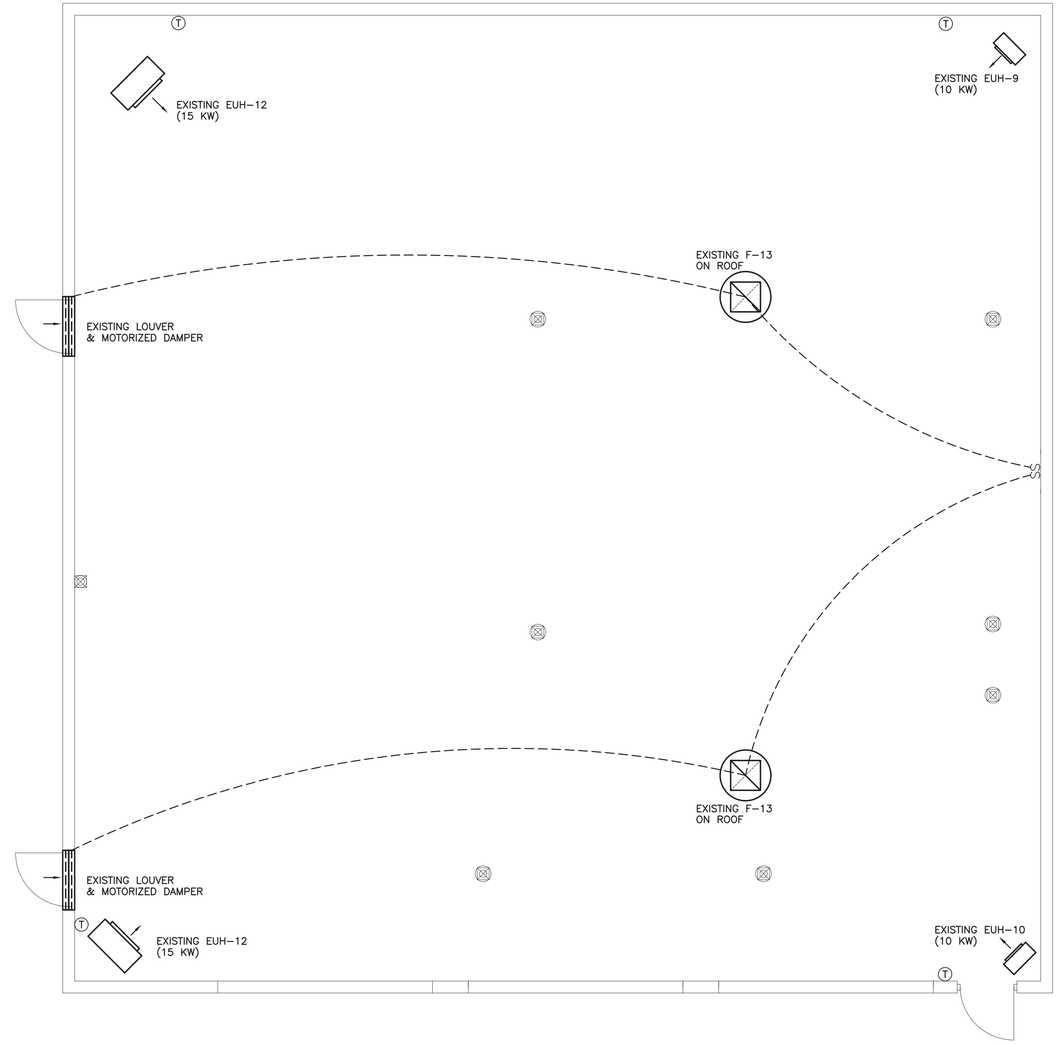

EFFLUENT UV BUILDING
FLOOR PLAN - HVAC

SCALE: 1/4" = 1'-0"

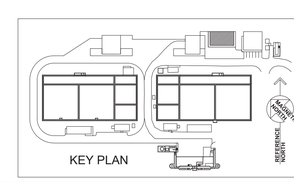

060418RB172000

BRITTAIN ENGINEERING, INC.
CONSULTING MECHANICAL AND ELECTRICAL ENGINEERS
PO BOX 939 HICKORY, NC 28603
TEL (828) 328-1813 FAX (828) 328-1814

FINAL DRAWINGS - NOT RELEASED FOR CONSTRUCTION

WK DICKSON
community infrastructure consultants
616 COLONNADE DRIVE
CHARLOTTE, NC 28205
(t)704-334-5348
(f)704-334-0078
WWW.WKDICKSON.COM
NC LICENSE NO.F-0374

NORTH CAROLINA PROFESSIONAL SEAL 7883 ENGINEER DONALD R. BRITTAIN 09/23/19
PROFESSIONAL SEAL

REVISION RECORD

NO.	DATE	DESCRIPTION	BY
A	10/9/18	ISSUE FOR OWNER/NCDEQ REVIEW	CRF

PROJECT NAME: KILLIAN CREEK WWTP PHASE 3 UPGRADE

DRAWING TITLE: EFFLUENT UV BUILDING HVAC

PROJ. MGR.:	CRF
DESIGN BY:	DRB
DRAWN BY:	RNB
PROJ. DATE:	SEPT. 2018
DRAWING NUMBER:	6-M.1
WKD PROJ. NO.:	20170294.00.CL

COPYRIGHT © 2018 DICKSON & CO., INC. ALL RIGHTS RESERVED. REPRODUCTION OR USE OF THIS CONTENT OR THE DOCUMENT, IN WHOLE OR IN PART, WITHOUT THE EXPRESS WRITTEN PERMISSION OF DICKSON & CO., INC. IS PROHIBITED. ALTERATIONS TO THIS DOCUMENT, INCLUDING REMOVAL OF THIS COPYRIGHT NOTICE, ARE PROHIBITED. PRINTS THE ORIGINAL OF THIS DOCUMENT MARKED WITH AN ORIGINAL SIGNATURE AND SEAL SHALL BE CONSIDERED TO BE VALID. FACE COPIES

FAN SCHEDULE

DESIG.	SERVES MOUNT	CFM	EXT. S.P.	RPM	WATTS H.P.	VOLTS PHASE	MFG./PART NO. GREENHECK	SONES	DRIVE	WGT LBS	ROOF OPENING	REMARKS
F-1RDT	ROTARY DRUM THICKNER	2,000	0.50	1282	3/4 HP	120V/1ø	SQ-140-VG	11.7	DIRECT	104	–	NEMA 1 DISCONNECT SWITCH, 2-SPEED MOTOR: 1000 CFM/2000 CFM, LINE VOLTAGE THERMOSTAT ON WALL
F-2RDT	ROTARY DRUM THICKNER	2,000	0.50	1282	3/4 HP	120V/1ø	SQ-140-VG	11.7	DIRECT	104	–	NEMA 1 DISCONNECT SWITCH, ECM MOTOR W/ DIAL, LINE VOLTAGE THERMOSTAT ON WALL, 120V/1ø MOTORIZED DAMPER
F-3RDT	ROTARY DRUM THICKNER	2,000	0.50	1282	3/4 HP	120V/1ø	SQ-140-VG	11.7	DIRECT	104	–	NEMA 1 DISCONNECT SWITCH, 2-SPEED MOTOR: 1000 CFM/2000 CFM, INTERLOCK W/ F-1RDT THERMOSTAT
F-4RDT	ROTARY DRUM THICKNER	2,000	0.50	1282	3/4 HP	120V/1ø	SQ-140-VG	11.7	DIRECT	104	–	NEMA 1 DISCONNECT SWITCH, ECM MOTOR W/ DIAL, INTERLOCK W/ F-1RDT THERMOSTAT,

APPROVED MANUFACTURER'S: GREENHECK, LOREN COOK, AMERICAN COOLAIR.
NOTE: FAN SPEED SHALL NOT EXCEED RPM ON SCHEDULE.

ELECTRIC UNIT HEATER SCHEDULE

UNIT NO.	SERVICE	CFM	△T °F	STAGES	KW	POWER	MANUFACTURER CATALOG NO.
EUH-1RDT	ROTARY DRUM THICKNER 701	700	34	1	7.5	460V, 3PH	MARKEL 5100
EUH-2RDT	ROTARY DRUM THICKNER 701	700	34	1	7.5	460V, 3PH	MARKEL 5100

APPROVED MANUFACTURER'S: MARKEL, TRANE, CHROMALOX, QMARK.
(1) WALL MOUNTED THERMOSTAT, CEILING MOUNTED BRACKET.

LOUVER SCHEDULE

DESIG.	SIZE W X H	CFM	MANUFACTURER AND MODEL NO.	MATERIAL	FINISH	ACCESSORIES/ REMARKS
L-1RDT	48" X 30"	4,000	GREENHECK EDD-401	ALUMINUM	KYNAR	(2)
L-2RDT	24" X 30"	2,000	GREENHECK EDD-401	ALUMINUM	KYNAR	(1)
L-3RDT	24" X 30"	2,000	GREENHECK EDD-401	ALUMINUM	KYNAR	(1)

APPROVED MANUFACTURER'S: GREENHECK, RUSKIN, POTTORFF,
(1) OPPOSED BLADE CONTROL DAMPER WITH BLADE AND JAMB SEALS, LINKAGE AND JACKSHAFTING, ELECTRIC MOTOR OPERATORS, 120 VOLTS, 1-PHASE, OPERATOR FRAME MOUNTING BRACKET, COLOR BY ARCHITECT, INTERLOCK W/ RESPECTIVE FAN
(2) COLOR BY ARCHITECT.

AIR DISTRIBUTION DEVICE SCHEDULE

TYPE	DESCRIPTION NECK SIZE	MOUNTING	MANUFACTURER CATALOG NO. PRICE	MATERIAL	FINISH	ACCESSORIES/ REMARKS
EG1	EXHAUST GRILLE 26" X 16"	SIDEWALL	535	STEEL	WHITE	BORDER TYPE F

APPROVED MANUFACTURER'S: PRICE, TITUS, NAILOR & METALAIRE.

MECHANICAL SYSTEMS, SERVICE SYSTEMS AND EQUIPMENT
METHOD OF COMPLIANCE

Prescriptive ● Energy Cost Budget ____

Climate Zone 4A
Exterior design conditions
winter dry bulb 18° F
summer dry bulb 93° F DB/74° F WB
Interior design conditions
winter dry bulb 72° F
summer dry bulb 75° F
relative humidity 50%
Building heating load 49.4 MBH
Building cooling load N/A
Mechanical Spacing Conditioning System
Unitary
description of unit ELECTRIC UNIT HEATERS
heating efficiency SEE SCHEDULES
cooling efficiency SEE SCHEDULES
heat output of unit SEE SCHEDULES
cooling output of unit SEE SCHEDULES
boiler
total boiler output. If oversized, state reason. N/A
chiller
total chiller capacity. If oversized, state reason. N/A
List equipment efficiencies N/A

Equipment schedules with motors (mechanical systems)
motor horsepower SEE SCHEDULES
number of phases SEE SCHEDULES
minimum efficiency PER NEMA STD MG 1-2003, TABLES 12-10 & 11
motor type ODP
# of poles 4

DESIGNER STATEMENT: [1]
To the best of my knowledge and belief, the design of this building complies with the mechanical systems, service systems and equipments of the North Carolina State Building Code, Energy Conservation Code, 2012 Edition.
SIGNED:
NAME: DONALD R. BRITTAIN
TITLE: NC PROFESSIONAL ENGINEER # 7883

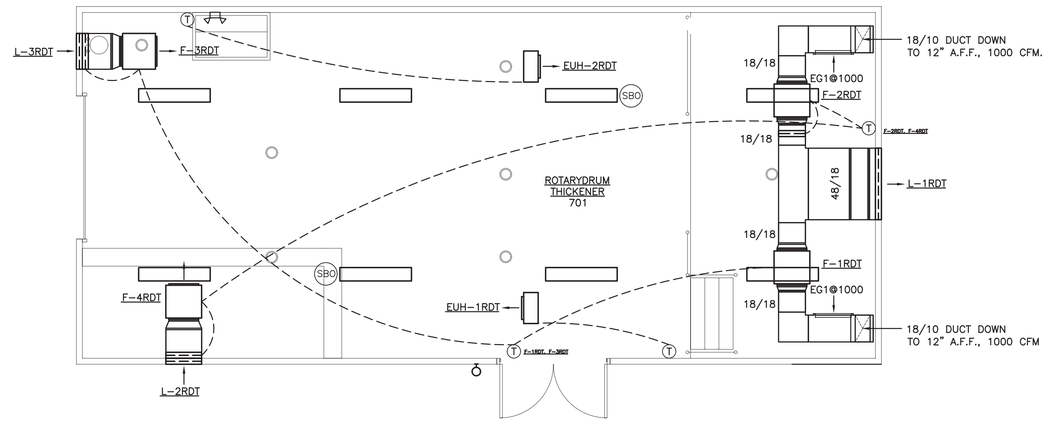

ROTARY DRUM THICKENER BUILDING FLOOR PLAN - HVAC

SCALE: 1/4" = 1'-0"

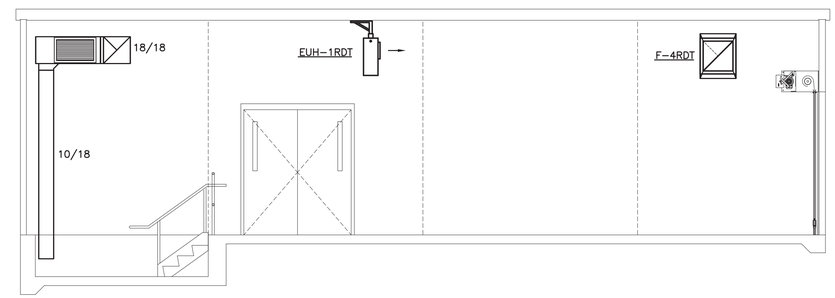

ROTARY DRUM THICKENER BUILDING ELEVATION - HVAC

SCALE: 1/4" = 1'-0"

OUTSIDE AIR CALCULATIONS:

PER 2012 NORTH CAROLINA MECHANICAL CODE:

Vbz = Rp*Pz +Ra*Az
Vbz = OUTDOOR AIR RATE IN BREATHING ZONE
Az = FLOOR AREA OF SPACE
Pz = # PEOPLE IN SPACE
Rp = PEOPLE OUTDOOR AIR RATE
Ra = AREA OUTDOOR AIR RATE

ROTARY DRUM THICKENER 701
836 S.F. X 12' HIGH = 10,032 C.F.
10,032 C.F. / 60 = 168 CFM/AIR CHANGE

FOR CONTINUOUS OPERATION:
168 CFM/AIR CHANGE X 5 AIR CHANGES/HOUR = 840 CFM
USE (2) 1,000 CFM EXHAUST FANS F-1RDT & F-3RDT FOR APPROX. 5 A.C./HOUR, BOTH RUNNING AT THE SAME TIME CONTINUOUS TO SUPPLY AND EXHAUST 1000 CFM.

FOR THERMOSTAT OPERATION:
UPON ACTIVATION OF THERMOSTAT, FANS F-1RDT & F-3RDT 2-SPEED FAN MOTORS TO RAMP UP TO 2000 CFM FOR 2000 CFM SUPPLY AND EXHAUST. FANS F-2RDT & F-4RDT TO RUN AT 2000 CFM EACH FOR AN ADDITIONAL 2000 CFM SUPPLY AND EXHAUST, FOR A TOTAL EXHAUST OF 4000 CFM OR 23 AIR CHANGES.

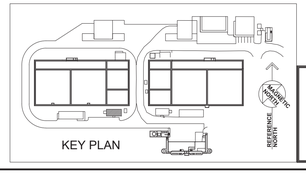

060418RB172000

BRITTAIN ENGINEERING, INC.
CONSULTING MECHANICAL AND ELECTRICAL ENGINEERS
PO BOX 930 HICKORY, NC 28603
TEL. (828) 328-1813 FAX (828) 328-1814

FINAL DRAWINGS - NOT RELEASED FOR CONSTRUCTION

WK DICKSON
community infrastructure consultants
616 COLONNADE DRIVE
CHARLOTTE, NC 28205
(t)704-334-5348
(f)704-334-0078
WWW.WKDICKSON.COM
NC LICENSE NO.F-0374

NORTH CAROLINA PROFESSIONAL SEAL 7883 ENGINEER DONALD R. BRITTAIN 10/23/18
PROFESSIONAL SEAL

REVISION RECORD

NO.	DATE	DESCRIPTION	BY
A	10/9/18	ISSUE FOR OWNER/NCDEQ REVIEW	CRF

PROJECT NAME: KILLIAN CREEK WWTP PHASE 3 UPGRADE
DRAWING TITLE: ROTARY DRUM THICKENER BUILDING HVAC

PROJ. MGR.:	CRF
DESIGN BY:	DRB
DRAWN BY:	RNB
PROJ. DATE:	SEPT. 2018
DRAWING NUMBER:	7.A-M.1
WKD PROJ. NO.:	20170294.00.CL

COPYRIGHT © 2012 DOCUMENTS CO., INC. ALL RIGHTS RESERVED. REPRODUCTION OR USE OF THIS CONTENT OR THE DOCUMENT, IN WHOLE OR IN PART, WITHOUT THE EXPRESS WRITTEN CONSENT OF DOCUMENTS CO., INC. IS PROHIBITED. ADDITIONS OR CHANGES TO THIS DOCUMENT AFTER PRINT PRODUCTION BY OTHERS THAN THE ORIGINAL SIGNATORY AND SEAL SHALL BE CONSIDERED TO BE NULL. RULE COPIES

ELECTRIC WALL HEATER SCHEDULE

DESIG. NO.	SERVICE	CFM	RISE °F	STAGES	KW	POWER	MANUFACTURER & MODEL NO.
EWH-1CFB	CHEMICAL FEED	100	–	1	2.0	208V, 1PH	MARKEL E3052T2DWB

APPROVED MANUFACTURER'S: MARKEL, TRANE, CHROMALOX, QMARK.

(1) BUILT–IN THERMOSTAT, SURFACE WALL BOX.

FAN SCHEDULE

DESIG.	SERVES MOUNT	CFM	EXT. S.P.	RPM	WATTS H.P.	VOLTS PHASE	MFG./PART NO. GREENHECK	SONES	DRIVE	WGT LBS	ROOF OPENING	REMARKS
F-1CFB	CHEMICAL ROOM	100	.25	1497	1/10 HP	120V/1ø	G–060–VG	3.3	DIRECT	28	10.5"X10.5"	24" ROOF CURB, 277V BACKDRAFT DAMPER, NEMA 1 DISCONNECT SWITCH, BIRDSCREEN, ECM MOTOR W/ DIAL, LINE VOLTAGE THERMOSTAT ON WALL

APPROVED MANUFACTURER'S: GREENHECK, LOREN COOK, AMERICAN COOLAIR.

NOTE: FAN SPEED SHALL NOT EXCEED RPM ON SCHEDULE.

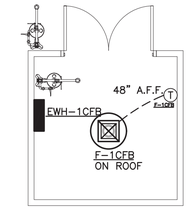

CHEMICAL FEED BUILDING FLOOR PLAN - HVAC

SCALE: 1/4" = 1'-0"

MECHANICAL SYSTEMS, SERVICE SYSTEMS AND EQUIPMENT
METHOD OF COMPLIANCE

Prescriptive ● Energy Cost Budget ____

Climate Zone 4A
Exterior design conditions
- winter dry bulb 18° F
- summer dry bulb 93° F DB/74° F WB

Interior design conditions
- winter dry bulb 72° F
- summer dry bulb 75° F
- relative humidity 50%

Building heating load 6.2 MBH
Building cooling load N/A
Mechanical Spacing Conditioning System
Unitary
- description of unit ELECTRIC UNIT HEATER
- heating efficiency SEE SCHEDULES
- cooling efficiency SEE SCHEDULES
- heat output of unit SEE SCHEDULES
- cooling output of unit SEE SCHEDULES

boiler
- total boiler output. If oversized, state reason. N/A

chiller
- total chiller capacity. If oversized, state reason. N/A

List equipment efficiencies N/A

Equipment schedules with motors (mechanical systems)
- motor horsepower SEE SCHEDULES
- number of phases SEE SCHEDULES
- minimum efficiency PER NEMA STD MG 1–2003, TABLES 12–10 & 11
- motor type ODP
- # of poles 4

DESIGNER STATEMENT: [1]

To the best of my knowledge and belief, the design of this building complies with the mechanical systems, service systems and equipments of the North Carolina State Building Code, Energy Conservation Code, 2012 Edition.

SIGNED:
NAME: DONALD R. BRITTAIN
TITLE: NC PROFESSIONAL ENGINEER # 7883

OUTSIDE AIR CALCULATIONS:

PER 2012 NORTH CAROLINA MECHANICAL CODE:

Vbz = Rp*Pz +Ra*Az
Vbz = OUTDOOR AIR RATE IN BREATHING ZONE
Az = FLOOR AREA OF SPACE
Pz = # PEOPLE IN SPACE
Rp = PEOPLE OUTDOOR AIR RATE
Ra = AREA OUTDOOR AIR RATE

CHEMICAL FEED BUILDING
64 S.F. X 10' HIGH = 640 C.F.
640 C.F. / 60 = 10.667 CFM/AIR CHANGE
10.667 CFM/AIR CHANGE X 10 AIR CHANGES/HOUR = 107 CFM
USE (1) 100 CFM EXHAUST FAN F–1CFB FOR APPROX. 10 A.C./HOUR.

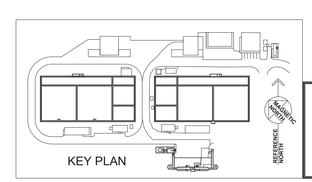

080718RB172000

BRITTAIN ENGINEERING, INC.
CONSULTING MECHANICAL AND ELECTRICAL ENGINEERS
PO BOX 939 HICKORY, NC 28603
TEL: (828) 328-1813 FAX: (828) 328-1814

FINAL DRAWINGS - NOT RELEASED FOR CONSTRUCTION

WK DICKSON
community infrastructure consultants
616 COLONNADE DRIVE
CHARLOTTE, NC 28205
(t)704-334-5348
(f)704-334-0078
WWW.WKDICKSON.COM
NC LICENSE NO.F-0374

NORTH CAROLINA PROFESSIONAL SEAL 7883 ENGINEER DONALD ROBERT BRITTAIN 10/09/18

PROFESSIONAL SEAL

REVISION RECORD

NO.	DATE	DESCRIPTION	BY
A	10/9/18	ISSUE FOR OWNER/NCDEQ REVIEW	CRF

PROJECT NAME: KILLIAN CREEK WWTP PHASE 3 UPGRADE

DRAWING TITLE: CHEMICAL FEED BUILDING HVAC

PROJ. MGR.:	CRF
DESIGN BY:	DRB
DRAWN BY:	RNB
PROJ. DATE:	SEPT. 2018

DRAWING NUMBER: 8-M.1

WKD PROJ. NO.: 20170294.00.CL

COPYRIGHT © 2018 DICKSON & CO., INC. ALL RIGHTS RESERVED. REPRODUCTION OR USE OF THIS CONTENT OR THE DOCUMENT IN WHICH IT APPEARS WITHOUT WRITTEN PERMISSION IS PROHIBITED. ALTERATIONS TO THE CONTENT OF THE DOCUMENT IN WHICH IT APPEARS IS PROHIBITED. PRINTS THE OWNER OF THIS DOCUMENT MARKED WITH AN ORIGINAL SIGNATURE AND SEAL SHALL BE CONSIDERED TO BE VALID. RAE COPIES

OUTSIDE AIR CALCULATIONS:

PER 2012 NORTH CAROLINA MECHANICAL CODE:

Vbz = Rp*Pz +Ra*Az
Vbz = OUTDOOR AIR RATE IN BREATHING ZONE
Az = FLOOR AREA OF SPACE
Pz = # PEOPLE IN SPACE
Rp = PEOPLE OUTDOOR AIR RATE
Ra = AREA OUTDOOR AIR RATE

EFFLUENT BUILDING 901
2800 S.F. X 22' HIGH = 61,600 C.F.
61,600 C.F. / 60 = 1027 CFM/AIR CHANGE
1027 CFM/AIR CHANGE X 10 AIR CHANGES/HOUR = 10,270 CFM
USE (2) 5,000 CFM EXHAUST FANS F-1EB & F-2EB FOR APPROX. 10 A.C./HOUR.

MECHANICAL SYSTEMS, SERVICE SYSTEMS AND EQUIPMENT METHOD OF COMPLIANCE

Prescriptive ● Energy Cost Budget ____

Climate Zone 4A
Exterior design conditions
winter dry bulb 18° F
summer dry bulb 93° F DB/74° F WB
Interior design conditions
winter dry bulb 72° F
summer dry bulb 75° F
relative humidity 50%
Building heating load 129.7 MBH
Building cooling load N/A
Mechanical Spacing Conditioning System
Unitary
description of unit ELECTRIC UNIT HEATERS
heating efficiency SEE SCHEDULES
cooling efficiency SEE SCHEDULES
heat output of unit SEE SCHEDULES
cooling output of unit SEE SCHEDULES
boiler
total boiler output. If oversized, state reason. N/A
chiller
total chiller capacity. If oversized, state reason. N/A
List equipment efficiencies N/A

Equipment schedules with motors (mechanical systems)
motor horsepower SEE SCHEDULES
number of phases SEE SCHEDULES
minimum efficiency PER NEMA STD MG 1-2003, TABLES 12-10 & 11
motor type ODP
# of poles 4

DESIGNER STATEMENT: [1]

To the best of my knowledge and belief, the design of this building complies with the mechanical systems, service systems and equipments of the North Carolina State Building Code, Energy Conservation Code, 2012 Edition.

SIGNED:
NAME: DONALD R. BRITTAIN
TITLE: NC PROFESSIONAL ENGINEER # 7883

ELECTRIC UNIT HEATER SCHEDULE

UNIT NO.	SERVICE	CFM	△T °F	STAGES	KW	POWER	MANUFACTURER CATALOG NO.
EUH-1EB	EFFLUENT BUILDING	700	45	1	10.0	460V, 3PH	MARKEL 5100
EUH-2EB	EFFLUENT BUILDING	700	45	1	10.0	460V, 3PH	MARKEL 5100
EUH-3EB	EFFLUENT BUILDING	700	45	1	10.0	460V, 3PH	MARKEL 5100
EUH-4EB	EFFLUENT BUILDING	700	45	1	10.0	460V, 3PH	MARKEL 5100

APPROVED MANUFACTURER'S: MARKEL, TRANE, CHROMALOX, QMARK.
(1) WALL MOUNTED THERMOSTAT, CEILING MOUNTED BRACKET.

FAN SCHEDULE

DESIG.	SERVES MOUNT	CFM	EXT. S.P.	RPM	WATTS H.P.	VOLTS PHASE	MFG./PART NO. GREENHECK	SONES	DRIVE	WGT LBS	ROOF OPENING	REMARKS
F-1EB	EFFLUENT FILTER	5,000	0.375	895	1-1/2 HP	460V/3ø	GB-200-VGD	16.6	DIRECT	107	20.5"X20.5"	24" ROOF CURB, 460V BACKDRAFT DAMPER, NEMA 1 DISCONNECT SWITCH, BIRDSCREEN, ECM MOTOR W/ DIAL, LINE VOLTAGE THERMOSTAT ON WALL
F-2EB	EFFLUENT FILTER	5,000	0.375	895	1-1/2 HP	460V/3ø	GB-200-VGD	16.6	DIRECT	107	20.5"X20.5"	24" ROOF CURB, 460V BACKDRAFT DAMPER, NEMA 1 DISCONNECT SWITCH, BIRDSCREEN, ECM MOTOR W/ DIAL, LINE VOLTAGE THERMOSTAT ON WALL

APPROVED MANUFACTURER'S: GREENHECK, LOREN COOK, AMERICAN COOLAIR.
NOTE: FAN SPEED SHALL NOT EXCEED RPM ON SCHEDULE.

LOUVER SCHEDULE

DESIG.	SIZE W X H	CFM	MANUFACTURER AND MODEL NO.	MATERIAL	FINISH	ACCESSORIES/ REMARKS
L-1EB	36" X 36"	5,000	GREENHECK EDD-401	ALUMINUM	KYNAR	(1)
L-2EB	36" X 36"	5,000	GREENHECK EDD-401	ALUMINUM	KYNAR	(1)

APPROVED MANUFACTURER'S: GREENHECK, RUSKIN, POTTORFF,
(1) OPPOSED BLADE CONTROL DAMPER WITH BLADE AND JAMB SEALS, LINKAGE AND JACKSHAFTING, ELECTRIC MOTOR OPERATORS, 460 VOLTS, 1-PHASE, OPERATOR FRAME MOUNTING BRACKET, COLOR BY ARCHITECT, INTERLOCK W/ RESPECTIVE FAN

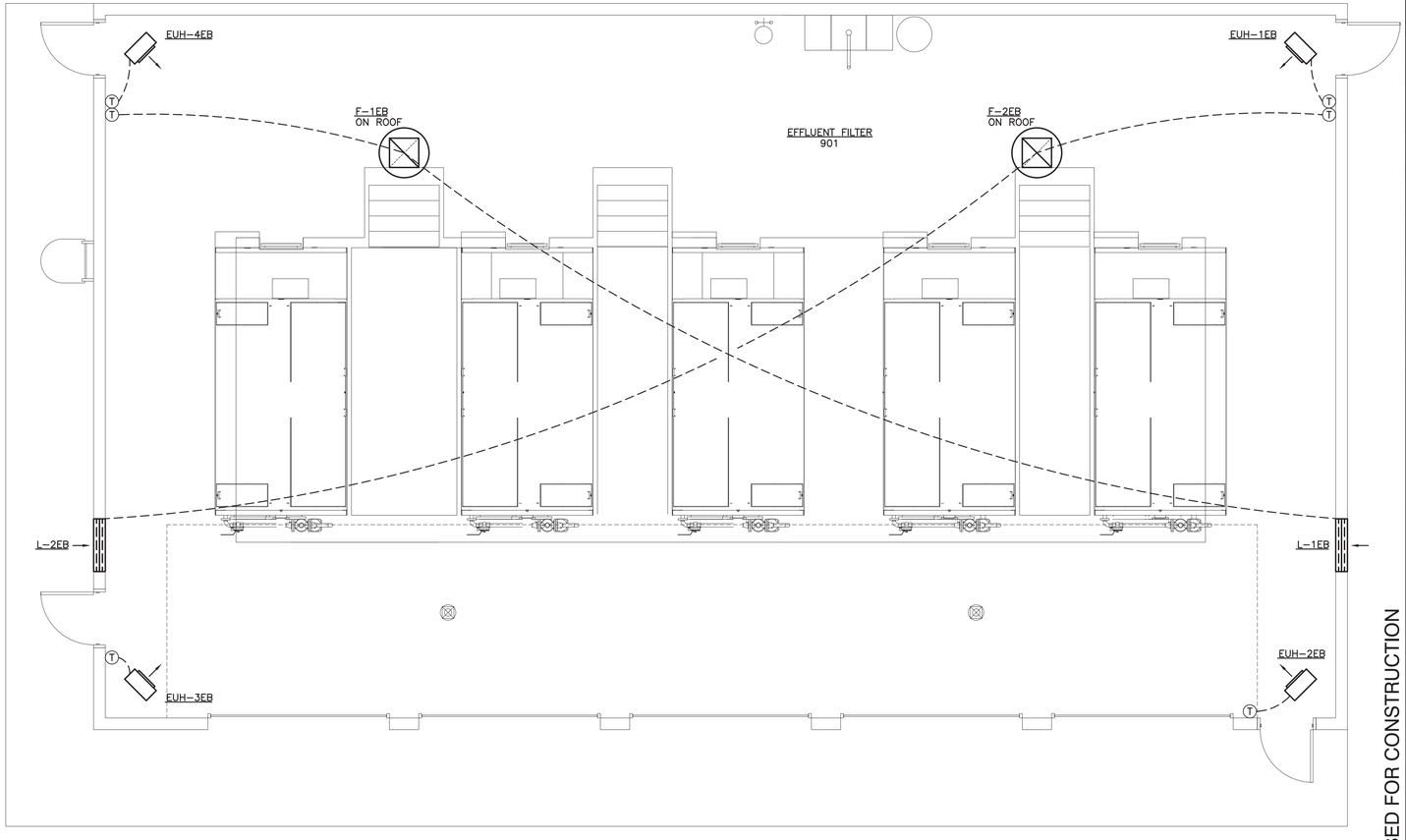

EFFLUENT FILTER BUILDING FLOOR PLAN - HVAC

SCALE: 1/4" = 1'-0"

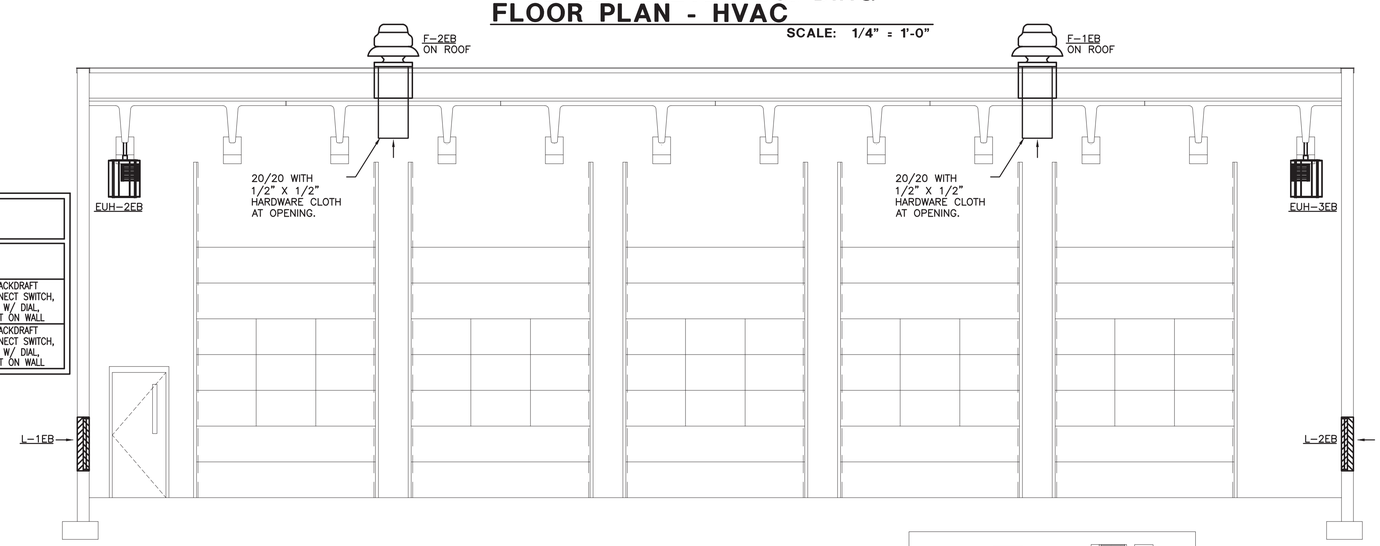

EFFLUENT FILTER BUILDING ELEVATION - HVAC

SCALE: 1/4" = 1'-0"

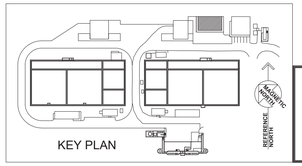

060418RB172000

BRITTAIN ENGINEERING, INC.
CONSULTING MECHANICAL AND ELECTRICAL ENGINEERS
PO BOX 930 HICKORY, NC 28603
TEL. (828) 326-1813 FAX. (828) 326-1814

FINAL DRAWINGS - NOT RELEASED FOR CONSTRUCTION

WK DICKSON
community infrastructure consultants
616 COLONNADE DRIVE
CHARLOTTE, NC 28205
(t)704-334-5348
(f)704-334-0078
WWW.WKDICKSON.COM
NC LICENSE NO.F-0374

NORTH CAROLINA PROFESSIONAL SEAL 7883 ENGINEER DONALD R. BRITTAIN 10/09/18

PROFESSIONAL SEAL

REVISION RECORD

NO.	DATE	DESCRIPTION	BY
A	10/9/18	ISSUE FOR OWNER/NCDEQ REVIEW	CRF

PROJECT NAME: KILLIAN CREEK WWTP PHASE 3 UPGRADE

DRAWING TITLE: EFFLUENT FILTER BUILDING HVAC

PROJ. MGR.:	CRF
DESIGN BY:	DRB
DRAWN BY:	RNB
PROJ. DATE:	SEPT. 2018

DRAWING NUMBER: 9-M.1

WKD PROJ. NO.: 20170294.00.CL

COPYRIGHT ©, W.K. DICKSON & CO., INC. ALL RIGHTS RESERVED. REPRODUCTION OR USE OF THE CONTENTS OF THIS DOCUMENT, ADDITIONS OR DELETIONS TO THIS DOCUMENT, IN WHOLE OR IN PART, WITHOUT WRITTEN CONSENT OF W.K. DICKSON & CO., INC. IS PROHIBITED. ONLY COPIES FROM THE ORIGINAL OF THIS DOCUMENT, MARKED WITH AN ORIGINAL SIGNATURE AND SEAL SHALL BE CONSIDERED TO BE VALID, TRUE COPIES.

ELECTRICAL SYSTEM AND EQUIPMENT

METHOD OF COMPLIANCE:

Energy Code: Prescriptive ● Performance ____
ASHRAE 90.1: Prescriptive ____ Performance ____

Lighting schedule

- lamp type required in fixture: See Fixture Schedule
- number of lamps in fixture: See Fixture Schedule
- ballast type used in the fixture: See Fixture Schedule
- number of ballasts in fixture: See Fixture Schedule
- total wattage per fixture: See Fixture Schedule
- total interior wattage specified vs allowed: 3143 / 8254
- total exterior wattage specified vs allowed: 1880 / 4280

Additional Prescriptive Compliance

- 506.2.1 More Efficient Mechanical Equipment ____
- 506.2.2 Reduced Lighting Power Density ●
- 506.2.3 Energy Recovery Ventilation Systems ____
- 506.2.4 Higher Efficiency Service Water Heating ____
- 506.2.5 On–Site Supply of Renewable Energy ____
- 506.2.6 Automatic Daylighting Control Systems ____

DESIGNER STATEMENT:[1]
To the best of my knowledge and belief, the design of this building complies with the electrical system and equipment requirements of the North Carolina State Building Code: Energy Conservation Code 2012.

SIGNED: [signature]
NAME: Donald R. Brittain
TITLE: North Carolina Professional Engineer #7883

ENTIRE PROJECT GENERAL NOTES:
- REFER TO SPECIFICATIONS FOR BOX TYPE, CONDUIT AND CONDUCTOR REQUIREMENTS.
- REFER TO HAZARDOUS LOCATIONS DETAILS ON SHEETS E0.2 AND E0.3. EC SHALL INSTALL AS REQUIRED FOR EACH HAZARDOUS LOCATION.

GENERAL NOTE:
FOR BRANCH CIRCUIT VOLTAGE DROP SEE BELOW:

120V, 20A SINGLE PHASE
0 – 100FT, 2#12, #12 GND
100 – 200FT, 2#10, #12 GND
200 – 300FT, 2#8, #10 GND
300 – ****FT, 2#6, #8 GND

277V, 20A & 30A SINGLE PHASE
0 – 100FT, 2#12, #12 GND
100 – 200FT, 2#10, #12 GND
200 – 300FT, 2#8, #10 GND
300 – 500FT, 2#6, #8 GND
500 – 800FT, 2#4, #6 GND
800 – 950FT, 2#3, #4 GND
950 – 1200FT, 2#2, #3 GND

LIGHTING FIXTURE SCHEDULE

MARK	TYPE	MOUNTING	MANUFACTURER CATALOG NO. 1	MANUFACTURER CATALOG NO. 2	MANUFACTURER CATALOG NO. 3	BALLAST QTY/TYPE	LAMPS QTY/TYPE	TOTAL WATTS	VOLTAGE	REMARKS
A	2' X 4' LED TROFFER	LAY–IN	LITHONIA 2GTL 4 60L GZ10 LP840	WILLIAMS 50G–S24–L65/840–A12125–DIM–UNV	LUMAX LGLED68L–4K24–9FBRS	–	LED	49 W	MVOLT	
B	2' X 4' LED TROFFER	LAY–IN	LITHONIA 2GTL 4 30L GZ10 LP840	WILLIAMS 50G–S24–L33/840–A12125–DIM–UNV	LUMAX LGLED34L–4K24–9FBRS	–	LED	27 W	MVOLT	
E	EMERGENCY	UNIVERSAL	KENALL METELHC 24N MW 2 6.5L DT	EATON SELIN 50 R7 SD	HOLOPHANE DM 30 WL LED	–	LED	–	120/277V	90 MIN. BATTERY BACKUP.
G	GASKETED LINEAR LED	SURFACE/ SUSPENSION AS REQUIRED	LITHONIA FEM L48 4000LM IMACD MD MVOLT GZ10 40K 80 CRI STSL	HOLOPHANE EMS–L48–4000LM–IMACD–MD–GZ10–40K 80CRI–STSL	WILLIAMS 97–4–L45/840–FR–SSCMB–SS LATCH DIM–UNV	–	LED	30 W	MVOLT	STAINLESS STEEL HARDWARE
G2	GASKETED LINEAR LED	SURFACE/ SUSPENSION AS REQUIRED	LITHONIA FEM L48 10000LM IMACD MD 40K 80 CRI STSL	HOLOPHANE EMS–L48–10000LM–IMACD–MD–GZ10–40K 80CRI–STSL	WILLIAMS 97–4–L95/840–FR–SSCMB–SS LATCH DIM–UNV	–	LED	80 W	MVOLT	STAINLESS STEEL HARDWARE
R	ROADWAY LIGHT	POLE	LITHONIA DSX2 LED P1 40K T2S 277 SPA SF DNAXD	VISIONAIRE LIGHTING VSX–1 T2 32LC 10 4K UNV CC	GENERAL ELECTRIC EAS C 4 F 7 40 A F	–	LED	108 W	MVOLT	PROVIDE FUSE IN POLE BASE. 4" ALUMINUM POLE MOUNTED AT 30' AFG. MATCH EXIST POLES. VERIFY FINISH. PROVIDE ALL HARDWARE.
R2	ROADWAY LIGHT	POLE	LITHONIA DSX2 LED P1 40K T4M 277 SPA SF DNAXD	VISIONAIRE LIGHTING VSX–1 T4 32LC 10 4K UNV CC	GENERAL ELECTRIC EAS C 4 F 7 40 A F	–	LED	108 W	MVOLT	PROVIDE FUSE IN POLE BASE. 4" ALUMINUM POLE MOUNTED AT 40' AFG. MATCH EXIST POLES. VERIFY FINISH. PROVIDE ALL HARDWARE.
S	SITE	POLE	LITHONIA DSXF3 LED P2 40K FL 277 SF	HOLOPHANE PLLED–9–4K–10A–AS–65–1–K–GP	AXPREA 8200 KED P1 40K FL YM BZ	–	LED	183 W	MVOLT	PROVIDE FUSE IN POLE BASE. 4" ALUMINUM POLE MOUNTED AT 30' AFG. MATCH EXIST POLES. VERIFY FINISH. PROVIDE ALL HARDWARE.
S2	SITE	POLE	LITHONIA DSXF3 LED P2 40K FL 277 SF	HOLOPHANE PLLED–9–4K–10A–AS–65–1–K–GP	AXPREA 8200 KED P1 40K FL YM BZ	–	LED	183 W	MVOLT	PROVIDE FUSE IN POLE BASE. 4" ALUMINUM POLE MOUNTED AT 40' AFG. MATCH EXIST POLES. VERIFY FINISH. PROVIDE ALL HARDWARE.
WP	WALL PACK	WALL	LITHONIA CSXW LED 30C 700 40K T3M 277 DDBXD	WILLIAMS VWP–H–L60/740–T3–DBZ	HUBBELL LMC–30LU–4K–1	–	LED	69 W	277V	MOUNT AT 18'–0" AFF (UNO)
WPE	WALL PACK EGRESS	WALL	LITHONIA LIL LED 40K MVOLT EL DDBTXD	WILLIAMS VWRV–L30/740–T3–DBZ–EM/4W	HUBBELL SG1–20–4K7–FT–UNV–DB–E	–	LED	9 W	MVOLT	PROVIDE 90 MIN. BATTERY BACKUP MOUNT AT 12'–0" AFF (UNO)
X	EXIT	UNIVERSAL	KENALL MW R DT EL	EATON UX7 X WH SD	DUAL LITE SEWL X RW 4X	–	LED	–	120/277V	90 MIN. BATTERY BACKUP. NUMBER OF FACES AND ARROWS AS INDICATED
XE	EXIT EMERGENCY	UNIVERSAL	KENALL METEC 24N MW R 2 6.5L DT	ISOLITE RWL–C R U WH	HUBBELL CWC X RW	–	LED	–	120/277V	90 MIN. BATTERY BACKUP. NUMBER OF FACES AND ARROWS AS INDICATED

NOTES: ALL FIXTURES SUPPLIED SHALL BE DLC LISTED. EC SHALL PREPARE DOCUMENTATION FOR EACH FIXTURE TO OWNER OR OTHERS AS REQUIRED AND SUBMIT SAME FOR LIGHTING REBATES.

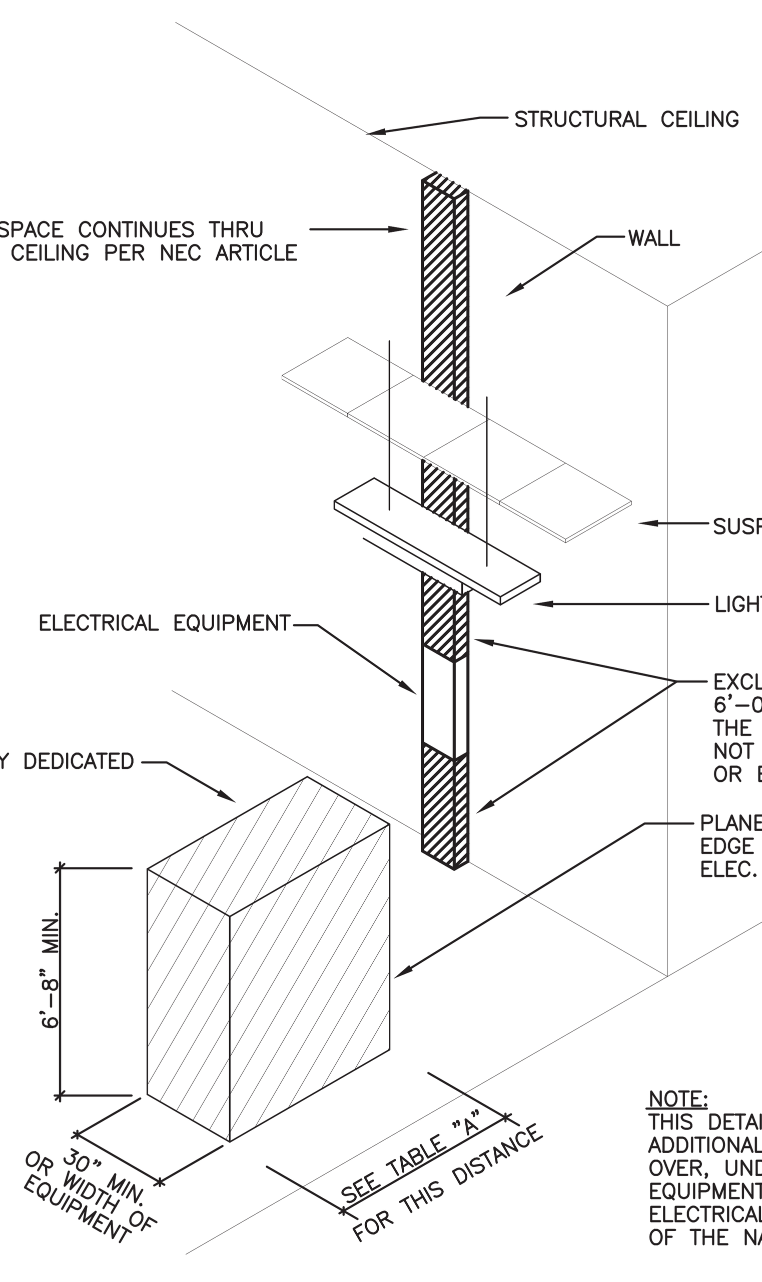

WHERE THE "CONDITIONS" ARE AS FOLLOWS
1. EXPOSED LIVE PARTS ON ONE SIDE AND NO LIVE OR GROUNDED PARTS ON THE OTHER SIDE OF THE WORKING SPACE, OR EXPOSED LIVE PARTS ON BOTH SIDES EFFECTIVELY GUARDED BY SUITABLE WOOD OR INSULATING MATERIALS. INSULATED WIRE OR INSULATED BUSBARS OPERATING AT NOT OVER 300V SHALL NOT BE CONSIDERED LIVE PARTS.
2. EXPOSED LIVE PARTS ON ONE AND GROUNDED PARTS ON THE OTHER.
3. EXPOSED LIVE PARTS ON BOTH SIDES OF THE WORKSPACE (NOT GUARDED AS PROVIDED IN CONDITION 1) WITH THE OPERATOR BETWEEN.

NOTE:
THIS DETAIL ILLUSTRATES THE WORKING SPACE & THE ADDITIONAL EXCLUSIVELY DEDICATED SPACE REQUIRED OVER, UNDER AND IN FRONT OF THE ELECTRICAL EQUIPMENT, CABLES, RACEWAYS, ETC. FROM THE ELECTRICAL EQUIPMENT REQUIRED BY SECTION 110–26 OF THE NATIONAL ELECTRIC CODE (NEC).

TABLE A – CLEARANCES

VOLTAGE TO GROUNDED NOMINAL	MINIMUM CLEAR DISTANCE (FEET) CONDITION: 1	2	3
0 – 150	3	3	3
151 – 600	3	3.5	4

CLEARANCE FOR ELEC. EQUIPMENT
NTS

NOTE:
REFER TO NEC ARTICLE 250.94 FOR ADDITIONAL INFORMATION ON "INTERSYSTEM BONDING TERMINAL".

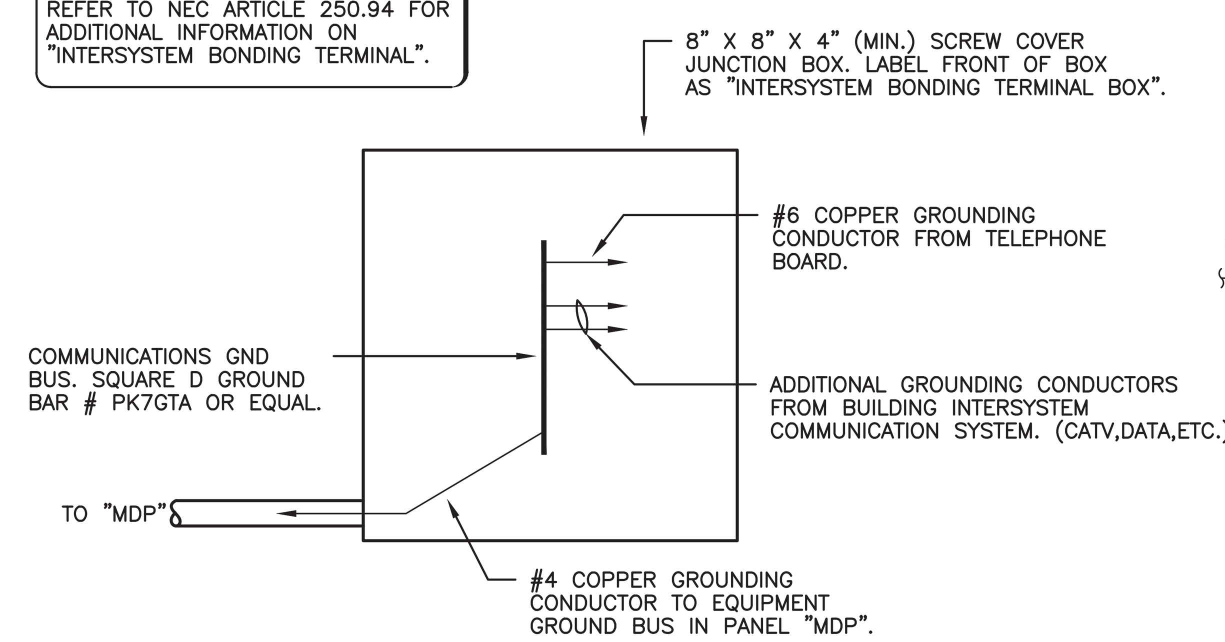

INTERSYSTEM BONDING TERMINAL BOX DETAIL
NTS

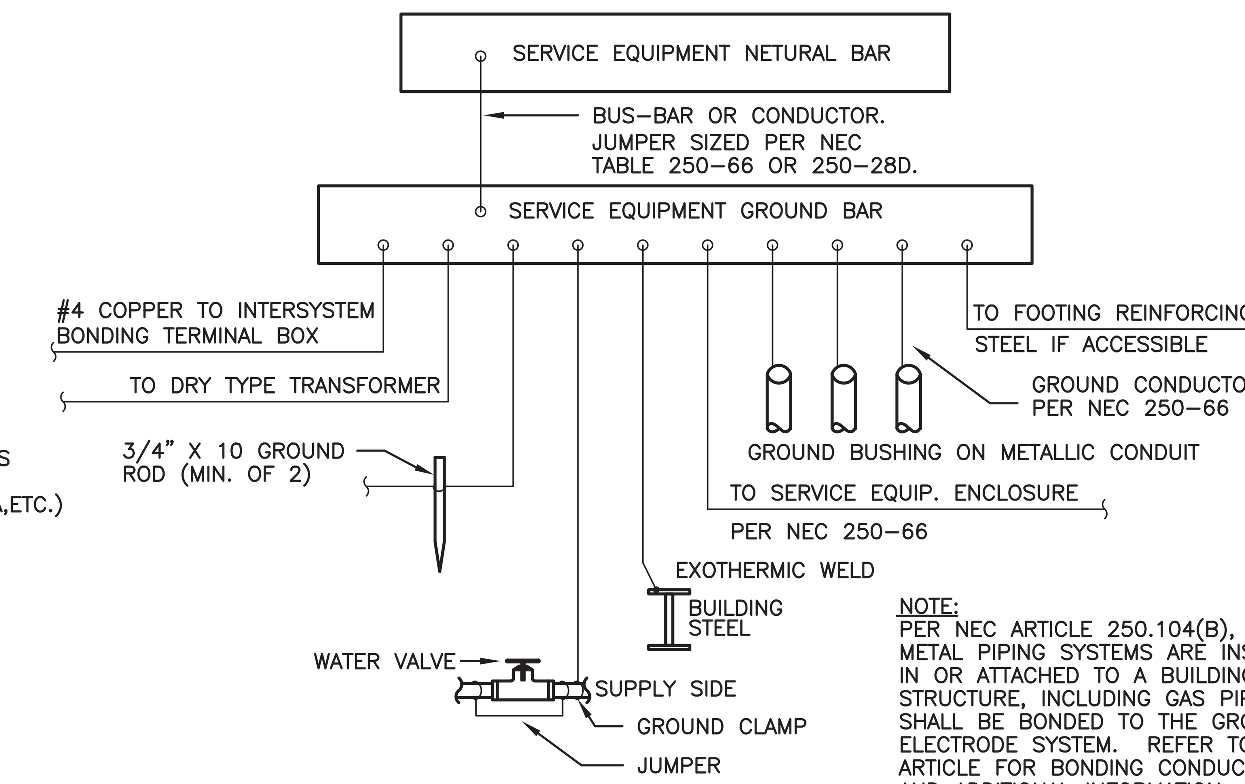

NOTE:
PER NEC ARTICLE 250.104(B), WHERE METAL PIPING SYSTEMS ARE INSTALLED IN OR ATTACHED TO A BUILDING OR STRUCTURE, INCLUDING GAS PIPING, THEY SHALL BE BONDED TO THE GROUNDING ELECTRODE SYSTEM. REFER TO NEC ARTICLE FOR BONDING CONDUCTOR SIZING AND ADDITIONAL INFORMATION.

SERVICE EQUIPMENT GROUNDING DETAIL
NTS

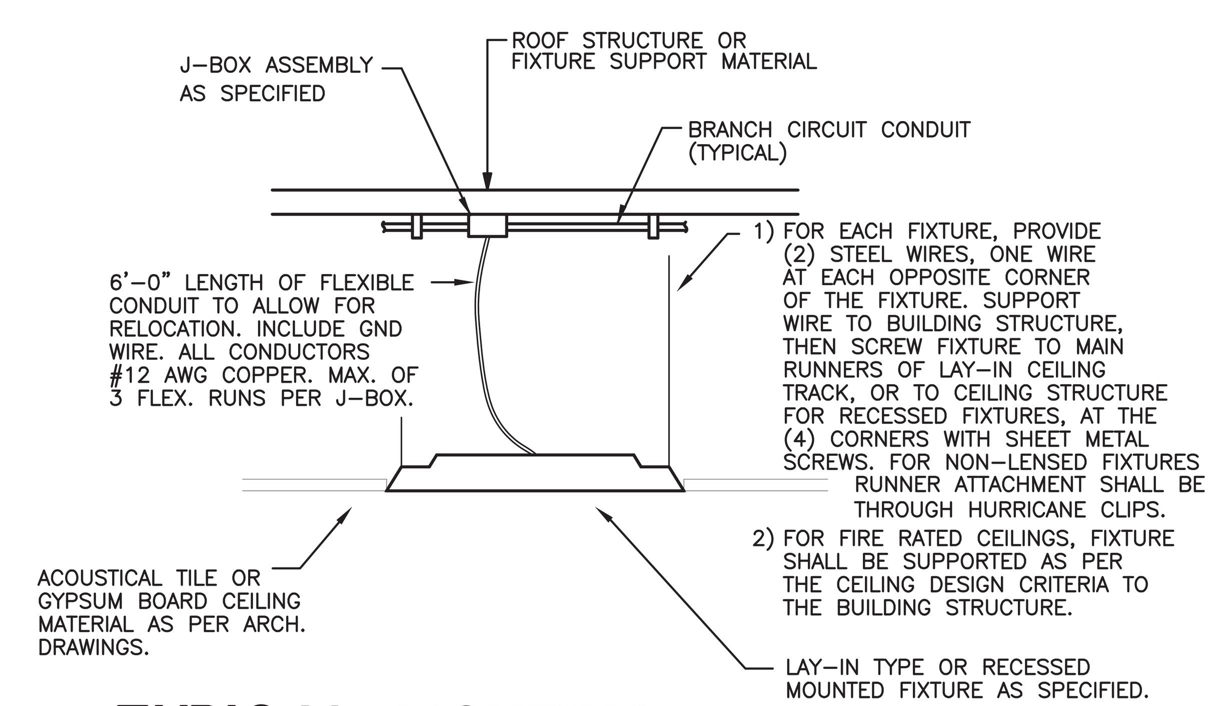

1) FOR EACH FIXTURE, PROVIDE (2) STEEL WIRES, ONE WIRE AT EACH OPPOSITE CORNER OF THE FIXTURE. SUPPORT WIRE TO BUILDING STRUCTURE, THEN SCREW FIXTURE TO MAIN RUNNERS OF LAY–IN CEILING TRACK, OR TO CEILING STRUCTURE FOR RECESSED FIXTURES, AT THE (4) CORNERS WITH SHEET METAL SCREWS. FOR NON–LENSED FIXTURES RUNNER ATTACHMENT SHALL BE THROUGH HURRICANE CLIPS.
2) FOR FIRE RATED CEILINGS, FIXTURE SHALL BE SUPPORTED AS PER THE CEILING DESIGN CRITERIA TO THE BUILDING STRUCTURE.

TYPICAL LIGHTING FIXTURE MOUNTING DETAIL
NTS

FINAL DRAWINGS - NOT RELEASED FOR CONSTRUCTION

081518DR172000

BRITTAIN ENGINEERING, INC.
CONSULTING MECHANICAL AND ELECTRICAL ENGINEERS
PO BOX 939 HICKORY, NC 28603
TEL. (828) 328-1813 FAX. (828) 328-1814

WK DICKSON
community infrastructure consultants
616 COLONNADE DRIVE
CHARLOTTE, NC 28205
(t)704-334-5348
(f)704-334-0078
WWW.WKDICKSON.COM
NC LICENSE NO.F-0374

NORTH CAROLINA PROFESSIONAL ENGINEER SEAL 7883 DONALD R. BRITTAIN 09/23/19
PROFESSIONAL SEAL

REVISION RECORD

NO.	DATE	DESCRIPTION	BY
A	10/9/18	ISSUE FOR OWNER/NCDEQ REVIEW	CRF

PROJECT NAME: KILLIAN CREEK WWTP PHASE 3 UPGRADE

DRAWING TITLE: SCHEDULES, DETAILS

PROJ. MGR.:	CRF
DESIGN BY:	
DRAWN BY:	
PROJ. DATE:	SEPT. 2018

DRAWING NUMBER: E0.1

WKD PROJ. NO.: 20170294.00.CL

COPYRIGHT © 2018 DICKSON & CO., INC. ALL RIGHTS RESERVED. REPRODUCTION OR USE OF THIS CONTENT OR THE DOCUMENT, IN WHOLE OR IN PART, WITHOUT WRITTEN PERMISSION OF DICKSON & CO., INC. IS PROHIBITED. ALL REPRODUCTIONS MUST BEAR THIS NOTICE. PRINTS FROM THE ORIGINAL OF THIS DOCUMENT MARKED WITH AN ORIGINAL SIGNATURE AND SEAL SHALL BE CONSIDERED TO BE VALID. PHOTO COPIES

OCCUPANCY SENSOR LEGEND

SYMBOL	DESCRIPTION
S	SENSORSWITCH CAT #WSD WH WALL SWITCH SENSOR – PASSIVE INFRARED (PIR)
SBO	SENSORSWITCH CAT #SBO 6 OCX (WET LOCATION RATED) FIXTURE OR J BOX MOUNTED SENSOR, EXTENDED RANGE 360°, LOW VOLTAGE, PASSIVE INFRARED (PIR).
SBO L	SENSORSWITCH CAT #SBOR 6 OCX (WET LOCATION RATED) FIXTURE OR J BOX MOUNTED SENSOR, EXTENDED RANGE 360°, LOW VOLTAGE, PASSIVE INFRARED (PIR).
P	SENSORSWITCH CAT #PP20, 20A RATED, 120/277V, POWER PACK. PROVIDE NEMA 3R BOX AND HARDWARE FOR MOUNTING IN WET LOCATIONS.

GENERAL NOTES:

- CEILING MOUNTED SENSORS SHALL BE INSTALLED A MINIMUM OF 6'–0" FROM ALL HVAC SUPPLY, RETURN & EXHAUST GRILLES.
- FINAL PLACEMENT OF POWER PACKS SHALL BE BY THE EC.
- CEILING MOUNTED EXTENDED RANGE 360° SENSORS: FOR MAXIMUM DISTANCE ROTATE SENSOR CLOCKWISE SO THAT THE SCREW AXIS IS POSITIONED APPROX 7.5° OFF THE ENTRANCE AXIS.
- CONTRACTOR SHALL INSTALL ALL DEVICES AS PER THE MANUFACTURER'S RECOMMENDATIONS.
- ACCEPTABLE ALTERNATE MANUFACTURERS LEGRAND, EATON.
- IF AN ALTERNATE DEVICE MANUFACTURER IS USED, THE CONTRACTOR SHALL BE RESPONSIBLE FOR OBTAINING A LAYOUT FROM THE MANUFACTURER AND SUBMITTING IT TO THE ENGINEER FOR APPROVAL. IF ADDITIONAL DEVICES ARE REQUIRED IT SHALL BE AT THE EXPENSE OF THE CONTRACTOR. AUTOCAD DRAWINGS MAY BE OBTAINED FROM THE ENGINEER.

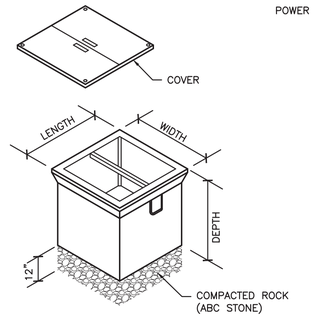

DESIGN BASIS: QUAZITE POLYMER CONCRETE, OR APPROVED EQUAVILENT

IN-GROUND PULL BOX

NTS

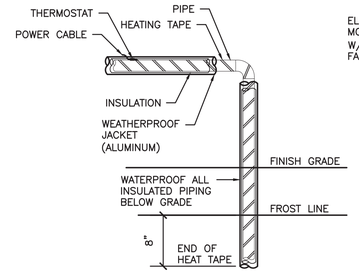

ELECTRIC HEAT TRACE/TAPE

NTS

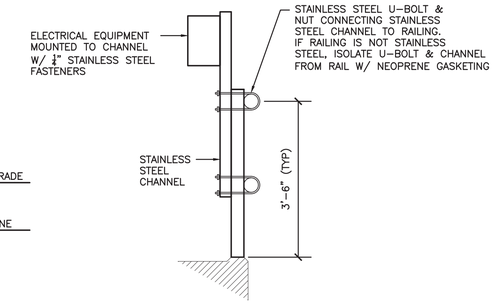

ELECTRICAL EQUIPMENT RAIL MOUNTING

NTS

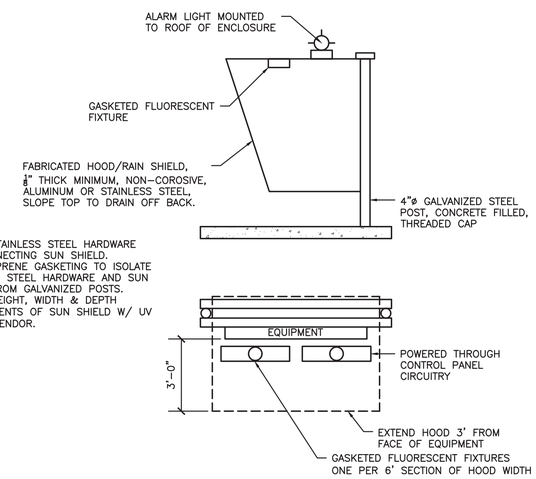

NOTES:

1. USE ⅜" STAINLESS STEEL HARDWARE FOR CONNECTING SUN SHIELD.
2. USE NEOPRENE GASKETING TO ISOLATE STAINLESS STEEL HARDWARE AND SUN SHIELD FROM GALVANIZED POSTS.
3. COORD HEIGHT, WIDTH & DEPTH REQUIREMENTS OF SUN SHIELD W/ UV SYSTEM VENDOR.

SUN SHIELD FOR EQUIPMENT CONTROL PANEL

NTS

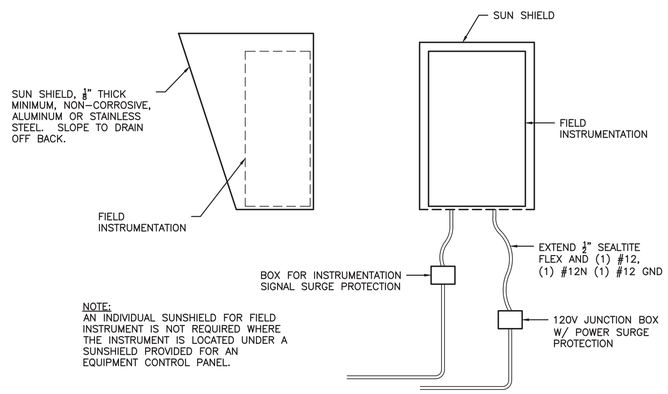

NOTE:
AN INDIVIDUAL SUNSHIELD FOR FIELD INSTRUMENT IS NOT REQUIRED WHERE THE INSTRUMENT IS LOCATED UNDER A SUNSHIELD PROVIDED FOR AN EQUIPMENT CONTROL PANEL.

FIELD INSTRUMENTATION, SUN SHIELD AND SURGE PROTECTION

NTS

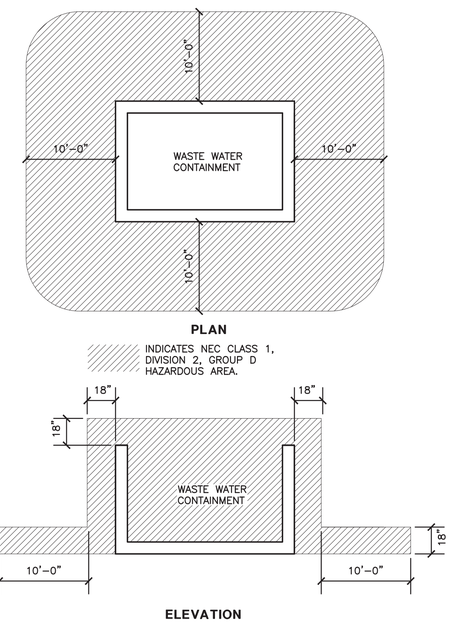

LIMIT OF HAZARDOUS AREAS FOR WASTEWATER CONTAINMENT STRUCTURES

NTS

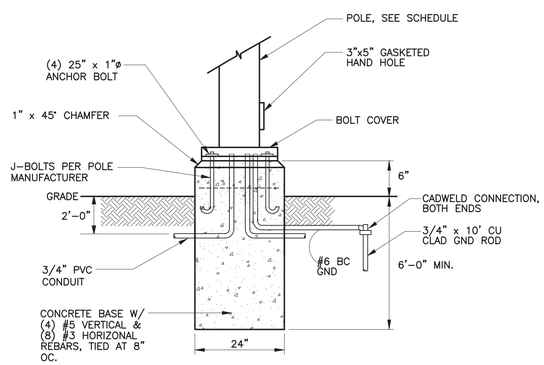

POLE BASE DETAIL

NTS

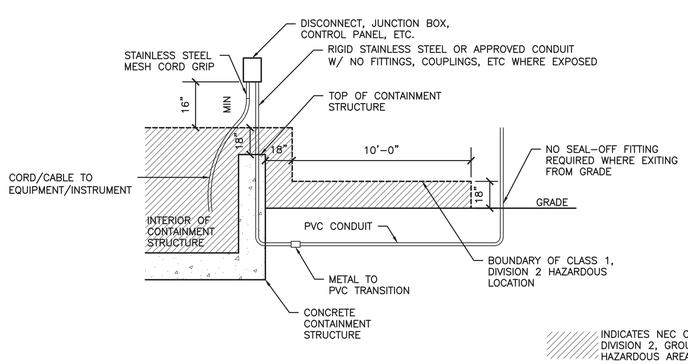

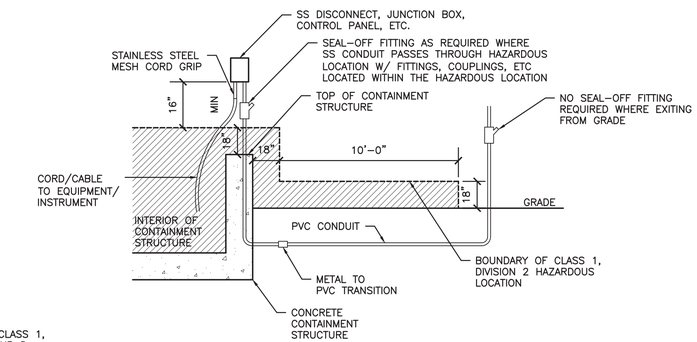

ELECTRICAL EQUIPMENT AND CIRCUITRY AT WASTEWATER CONTAINMENT STRUCTURES

NTS

050818DR172000

BRITTAIN ENGINEERING, INC.
CONSULTING MECHANICAL AND ELECTRICAL ENGINEERS
PO BOX 939 HICKORY, NC 28603
TEL (828) 326-1813 FAX (828) 326-1814

FINAL DRAWINGS - NOT RELEASED FOR CONSTRUCTION

WK DICKSON
community infrastructure consultants
616 COLONNADE DRIVE
CHARLOTTE, NC 28205
(t)704-334-5348
(f)704-334-0078
WWW.WKDICKSON.COM
NC LICENSE NO.F-0374

NORTH CAROLINA PROFESSIONAL SEAL 7883 ENGINEER DANIAL DOHERTY III 10/09/18

PROFESSIONAL SEAL

REVISION RECORD

NO.	DATE	DESCRIPTION	BY
A	10/9/18	ISSUE FOR OWNER/NCDEQ REVIEW	CRF

PROJECT NAME: KILLIAN CREEK WWTP PHASE 3 UPGRADE

DRAWING TITLE: DETAILS

PROJ. MGR.:	CRF
DESIGN BY:	
DRAWN BY:	
PROJ. DATE:	SEPT. 2018
DRAWING NUMBER:	E0.2
WKD PROJ. NO.:	20170294.00.CL

COPYRIGHT © WK DICKSON & CO. INC. ALL RIGHTS RESERVED. REPRODUCTION OR USE OF THE CONTENTS OF THIS DOCUMENT, ADDITIONS OR DELETIONS TO THIS DOCUMENT, IN WHOLE OR IN PART, WITHOUT WRITTEN CONSENT OF WK DICKSON & CO. INC., IS PROHIBITED. ONLY COPIES FROM THE ORIGINAL OF THIS DOCUMENT MARKED WITH AN ORIGINAL SIGNATURE AND SEAL SHALL BE CONSIDERED TO BE VALID. FACE COPIES.

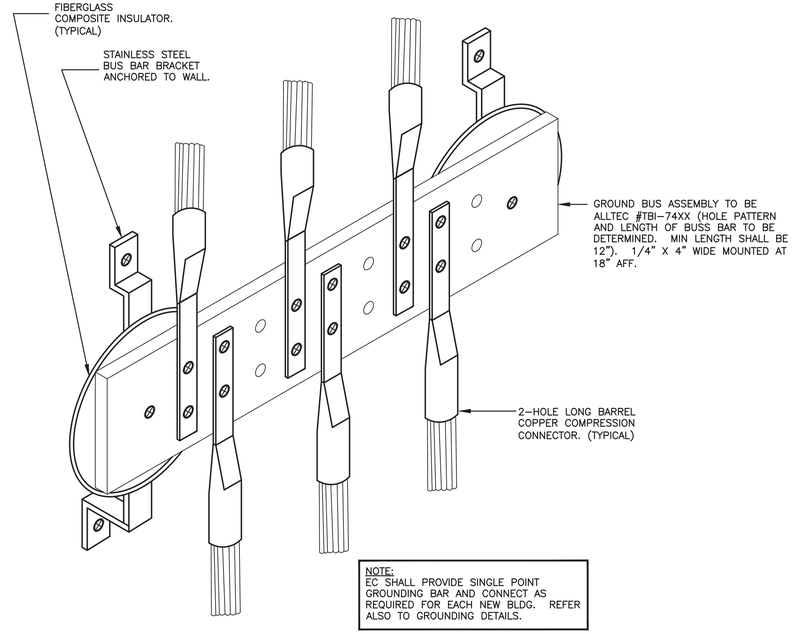

NOTE:
EC SHALL PROVIDE SINGLE POINT GROUNDING BAR AND CONNECT AS REQUIRED FOR EACH NEW BLDG. REFER ALSO TO GROUNDING DETAILS.

GROUNDING BUS DETAIL
NTS

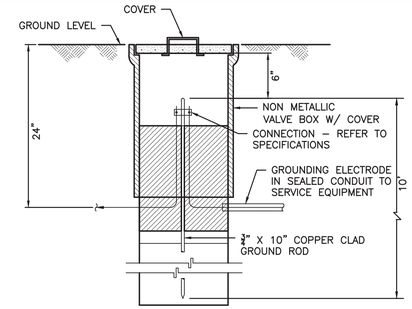

TYPICAL GROUNDING TEST HANDHOLD DETAIL
NTS

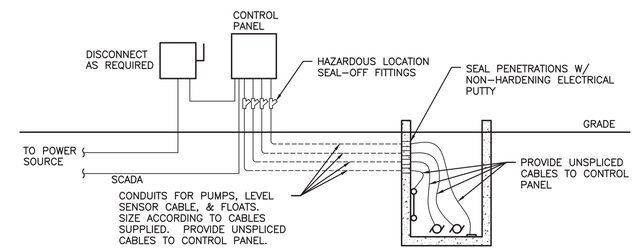

TYPICAL WET WELL DETAIL
NTS

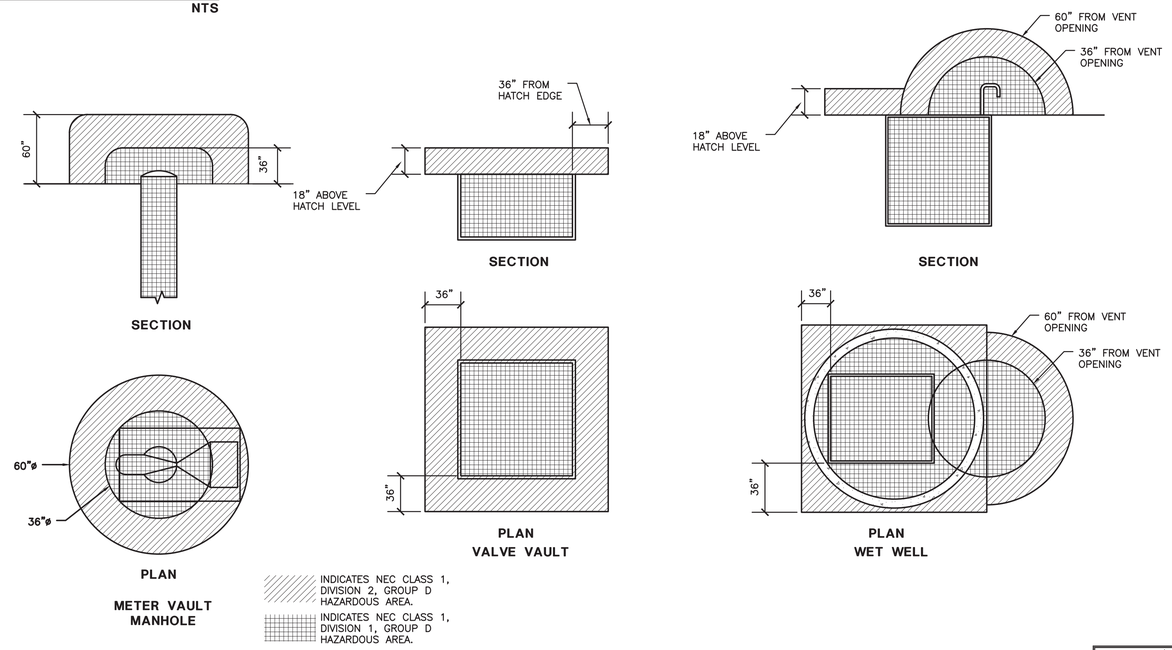

WASTEWATER PUMP STATION HAZARDOUS LOCATION DIAGRAM
NTS

FINAL DRAWINGS - NOT RELEASED FOR CONSTRUCTION

050818DR172000

BRITTAIN ENGINEERING, INC.
CONSULTING MECHANICAL AND ELECTRICAL ENGINEERS
PO BOX 939 HICKORY, NC 28603
TEL (828) 328-1813 FAX (828) 328-1814

WK DICKSON
community infrastructure consultants
616 COLONNADE DRIVE
CHARLOTTE, NC 28205
(t)704-334-5348
(f)704-334-0078
WWW.WKDICKSON.COM
NC LICENSE NO.F-0374

NORTH CAROLINA PROFESSIONAL SEAL 7883 ENGINEER DONALD BRITTAIN 09/23/19
PROFESSIONAL SEAL

REVISION RECORD

NO.	DATE	DESCRIPTION	BY
A	10/9/18	ISSUE FOR OWNER/NCDEQ REVIEW	CRF

PROJECT NAME: KILLIAN CREEK WWTP PHASE 3 UPGRADE

DRAWING TITLE: DETAILS

PROJ. MGR.:	CRF
DESIGN BY:	
DRAWN BY:	
PROJ. DATE:	SEPT. 2018
DRAWING NUMBER:	E0.3
WKD PROJ. NO.:	20170294.00.CL

COPYRIGHT ©, W.K. DICKSON & CO., INC. ALL RIGHTS RESERVED. REPRODUCTION OR USE OF THE CONTENTS OF THIS DOCUMENT, ADDITIONS OR DELETIONS TO THIS DOCUMENT, IN WHOLE OR IN PART, WITHOUT WRITTEN CONSENT OF W.K. DICKSON & CO., INC. IS PROHIBITED. ONLY COPIES FROM THE ORIGINAL OF THIS DOCUMENT, MARKED WITH AN ORIGINAL SIGNATURE AND SEAL SHALL BE CONSIDERED TO BE VALID, TRUE COPIES.

PANEL SDH2

35,000 AMPS RMS. SYM. I.C. INTEGRATED EQUIPMENT RATING — SURFACE MOUNTED

277/480 VOLTS, 3 PHASE, 4 WIRE, 200 AMP MAIN BREAKER

SERVES	CIR LOAD	CIR NO.			CIR NO.	CIR LOAD	SERVES
LIGHTING – INDOOR	1.25	1			2	1.12	
– OUTDOOR	0.70	3		20	4	1.12	OVERHEAD DOORS
	1.27	5			6	1.12	
BRIDGE CRANE	1.27	7	20		8		SPACE
	1.27	9			10		
	6.67	11			12		
EUH–3SDB, 4SDB	6.67	13	30		14	1.27	
	6.67	15		20	16	1.27	COMPRESSOR
	5.00	17			18	1.27	
EUH–1SDB, 2SDB	5.00	19	30		20		SPACE
	5.00	21			22		
SPACE		23			24		
		25			26		
		27			28		
		29			30		
		31			32	10.06	
		33		100	34	10.06	ROTARY SLUDGE PRESS 3 CONTROLS
		35			36	10.06	
	4.93	37			38	10.06	
PANEL SDP2 (VIA TX SD2 – 30 KVA)	4.93	39	50	100	40	10.06	ROTARY SLUDGE PRESS 4 CONTROLS
	4.93	41			42	10.06	

TOTAL CONNECTED LOAD: 123.1 KVA — ALL BREAKERS ARE 1P–20A UNLESS OTHERWISE NOTED

PANEL NOTES:

PANEL SPH2

35,000 AMPS RMS. SYM. I.C. INTEGRATED EQUIPMENT RATING — SURFACE MOUNTED

277/480 VOLTS, 3 PHASE, 4 WIRE, 300 AMP MAIN BREAKER

SERVES	CIR LOAD	CIR NO.			CIR NO.	CIR LOAD	SERVES
LIGHTING – INDOOR	0.32	1			2	3.06	
– OUTDOOR	0.15	3		30	4	3.06	SLUDGE TRANSFER #7
SPACE		5			6	3.06	
	1.33	7			8	3.06	
CAUSTIC RECIRC PUMP	1.33	9	20	30	10	3.06	SLUDGE TRANSFER #8
	1.33	11			12	3.06	
	1.33	13			14	3.06	
SLUDGE PUMP MASCERATOR	1.33	15	50	30	16	3.06	SLUDGE TRANSFER #9
CONTROL PANEL 2	1.33	17			18	3.06	
	19.40	19			20	3.33	
POST EQ PUMP CONTROL PANEL	19.40	21	100	20	22	3.33	EUH – 1SPB
	19.40	23			24	3.33	
	11.70	25			26	1.62	
MXCPZ–POST EQ MIX	11.70	27	80	20	28	1.62	DIGESTER 3,4 HOLDING AIR VALVES
CONTROL PANEL	11.70	29			30	1.62	
SPACE		31			32		SPACE
		33			34		
		35			36		
		37			38	4.36	
		39		50	40	4.36	PANEL SSP2 (VIA TX–SPZ–30KVA)
		41			42	4.36	

TOTAL CONNECTED LOAD: 157.21 KVA — ALL BREAKERS ARE 1P–20A UNLESS OTHERWISE NOTED

PANEL NOTES:

PANEL SPP2

10,000 AMPS RMS. SYM. I.C. INTEGRATED EQUIPMENT RATING — SURFACE MOUNTED

120/208 VOLTS, 3 PHASE, 4 WIRE, 100 AMP MAIN BREAKER

SERVES	CIR LOAD	CIR NO.			CIR NO.	CIR LOAD	SERVES
PRESSURE GAUGE/SWITCH	0.18	1			2	0.18	RECEPTACLE FOR HEAT TRACE
CAUSTIC RECIRC PUMP	0.18	3			4	0.36	RECEPTACLES – GENERAL
CAUSTIC RECIRC PUMP	0.18	5			6	0.36	
CAUSTIC RECIRC PUMP	0.18	7			8	1.33	F–1SPB FAN
CAUSTIC RECIRC PUMP	0.18	9		30	10	1.44	POST EQ GENERAL RECEPTACLES
CAUSTIC RECIRC PUMP	0.18	11			12	0.10	DIGESTER 3,4 INSTRUMENTATION
RECEPTACLES – GENERAL	0.54	13			14	1.50	DIGESTER 3,4 HEAT TRACE
RECEPTACLE FOR HEAT TRACE	0.18	15			16	1.50	DIGESTER 3,4 HEAT TRACE
WATER HEATER	2.25	17	30		18	0.10	POST EQ LEVEL POWER
	2.25	19			20		SPACE
SPARE		21			22		
		23			24		
		25			26		
		27			28		
		29			30		

TOTAL CONNECTED LOAD: 13.17 KVA — ALL BREAKERS ARE 1P–20A UNLESS OTHERWISE NOTED

PANEL NOTES:

PANEL CH

18,000 AMPS RMS. SYM. I.C. INTEGRATED EQUIPMENT RATING — SURFACE MOUNTED NEMA 4X SS

277/480 VOLTS, 3 PHASE, 4 WIRE, 60 AMP MAIN BREAKER

SERVES	CIR LOAD	CIR NO.			CIR NO.	CIR LOAD	SERVES
LIGHTING	0.11	1			2	0.94	
	1.15	3		20	4	0.94	CHEMICAL RECIRC PUMP
SLUDGE AERIATORS 3,4	1.15	5	20		6	0.94	
	1.15	7			8	1.15	
SPACE		9		20	10	1.15	SLUDGE AERIATORS 1,2
		11			12	1.15	
		13			14		SPACE
		15			16		
		17			18		

TOTAL CONNECTED LOAD: 9.83 KVA — ALL BREAKERS ARE 1P–20A UNLESS OTHERWISE NOTED

PANEL NOTES: FED FROM BH2 – BLOWER BLDG 2

PANEL RDTH2

14,000 AMPS RMS. SYM. I.C. INTEGRATED EQUIPMENT RATING — SURFACE MOUNTED

277/480 VOLTS, 3 PHASE, 4 WIRE, 100 AMP MAIN BREAKER

SERVES	CIR LOAD	CIR NO.			CIR NO.	CIR LOAD	SERVES
LIGHTING	0.25	1			2	2.50	
	5.70	3		20	4	2.50	EUH–1RDT
RDTCP2	5.70	5	60		6	2.50	
	5.70	7			8	2.50	
	3.05	9		20	10	2.50	EUH–1RDT
RDT FEED PUMPS	3.05	11	60		12	2.50	
	3.05	13			14		SPACE
SPACE		15			16		
		17			18		
		19			20		
		21			22		
		23			24		
	5.10	25			26		
PANEL RDTP2	5.10	27	50		28		
(VIA TX RDT2 – 30 KVA)	5.10	29			30		

TOTAL CONNECTED LOAD: 56.80 KVA — ALL BREAKERS ARE 1P–20A UNLESS OTHERWISE NOTED

PANEL NOTES:

PANEL RDTP2

10,000 AMPS RMS. SYM. I.C. INTEGRATED EQUIPMENT RATING — SURFACE MOUNTED NEMA 4X SS

120/208 VOLTS, 3 PHASE, 4 WIRE, 60 AMP MAIN BREAKER

SERVES	CIR LOAD	CIR NO.			CIR NO.	CIR LOAD	SERVES
POLYMER PUMP	1.20	1			2	1.65	F–4 RDT
SCISSOR LIFT	1.92	3	30		4	1.65	F–3 RDT
ROTARY DRUM FLOW	0.18	5			6	1.65	F–1 RDT
RECEPTACLES	0.90	7			8	1.65	F–2 RDT
SPARE		9			10	2.25	WATER HEATER
		11		30	12	2.25	
		13			14		SPACE
		15			16		
		17			18		

TOTAL CONNECTED LOAD: 15.30 KVA — ALL BREAKERS ARE 1P–20A UNLESS OTHERWISE NOTED

PANEL NOTES:

PANEL SDP2

10,000 AMPS RMS. SYM. I.C. INTEGRATED EQUIPMENT RATING — SURFACE MOUNTED

277/480 VOLTS, 3 PHASE, 4 WIRE, 100 AMP MAIN BREAKER

SERVES	CIR LOAD	CIR NO.			CIR NO.	CIR LOAD	SERVES
RECEPTACLES – CONTROL ROOM	0.54	1			2	0.18	SCADA #5
– COUNTER	0.36	3			4	1.25	POLYMER PUMP #1
– GEN	0.72	5			6	1.25	POLYMER PUMP #2
– OUTSIDE	0.90	7			8	1.92	SCISSOR LIFT
– EWH–1SDB	1.50	9			10	2.25	WATER HEATER
HP–1SDB	0.84	11		30	12	2.25	
	0.84	13	20		14		SPACE
SPARE		15			16		
		17			18		
		19			20		
		21			22		
		23			24		
		25			26		
		27			28		
		29			30		

TOTAL CONNECTED LOAD: 14.80 KVA — ALL BREAKERS ARE 1P–20A UNLESS OTHERWISE NOTED

PANEL NOTES:

PANEL BH2

35,000 AMPS RMS. SYM. I.C. INTEGRATED EQUIPMENT RATING — SURFACE MOUNTED

277/480 VOLTS, 3 PHASE, 4 WIRE, 100 AMP MAIN LUGS ONLY

SERVES	CIR LOAD	CIR NO.			CIR NO.	CIR LOAD	SERVES
LIGHTING	1.00	1			2	3.28	
	1.33	3		60	4	3.28	PANEL CH (CHEMICAL BLDG)
BRIDGE CRANE	1.33	5	20		6	3.28	
	1.33	7			8	0.17	
SITE LIGHTING	1.13	9		30	10	0.17	EFFLUENT VALVES 3 & 4
SITE LIGHTING	1.42	11			12	0.17	
SPACE		13			14	11.72	
		15		70	16	11.72	PANEL BPZ (VIA TX BPZ – 45KVA)
		17			18	11.72	
		19			20		SPACE
		21			22		
		23			24		
		25			26		
		27			28		
		29			30		

TOTAL CONNECTED LOAD: 53.04 KVA — ALL BREAKERS ARE 1P–20A UNLESS OTHERWISE NOTED

PANEL NOTES:

PANEL BP2

10,000 AMPS RMS. SYM. I.C. INTEGRATED EQUIPMENT RATING — SURFACE MOUNTED

120/208 VOLTS, 3 PHASE, 4 WIRE, 150 AMP MAIN BREAKER

SERVES	CIR LOAD	CIR NO.			CIR NO.	CIR LOAD	SERVES
RTU – BLOWER BLDG 2	0.50	1			2	1.75	SBR VALVE ACTUATOR
SCADA – BLOWER BLDG 2	0.50	3			4	1.75	SBR VALVE ACTUATOR
FAN F1BB	1.13	5			6	0.54	RECEPTACLES
FAN F2BB	1.13	7			8	0.54	
FAN F3BB	0.48	9			10	0.72	
SBR 3,4 INSTRUMENTATION	0.10	11		30	12	1.08	SBR4 GENERAL RECEPTACLES
SBR 3,4 HEAT TRACE	1.50	13		30	14	1.26	SBR3 GENERAL RECEPTACLES
SBR 3,4 HEAT TRACE	1.50	15			16	5.89	
DECANTER HEAT TRACE	1.50	17		60	18	5.89	PANEL CP (CHEMICAL BLDG)
DECANTER HEAT TRACE	1.50	19			20	5.89	
SPARE		21			22		SPACE
		23			24		
		25			26		
		27			28		
		29			30		
		31			32		
		33			34		
		35			36		
		37			38		
		39			40		
		41			42		

TOTAL CONNECTED LOAD: 35.16 KVA — ALL BREAKERS ARE 1P–20A UNLESS OTHERWISE NOTED

PANEL NOTES:

PANEL CP

10,000 AMPS RMS. SYM. I.C. INTEGRATED EQUIPMENT RATING — SURFACE MOUNTED NEMA 4X SS

120/208 VOLTS, 3 PHASE, 4 WIRE, 60 AMP MAIN BREAKER

SERVES	CIR LOAD	CIR NO.			CIR NO.	CIR LOAD	SERVES
RECEPTACLES	0.36	1			2	1.50	HEAT TRACE
	0.36	3			4	1.50	HEAT TRACE
	0.70	5			6	1.50	HEAT TRACE
	0.70	7			8	1.50	STORAGE TANK HEAT
	0.70	9			10	1.50	STORAGE TANK FILL HEAT
	0.36	11			12	2.25	WATER HEATER
INFLUENT REFRIGERATED SAMPLER	0.50	13		30	14	2.25	
SPARE		15			16	1.00	EWH–1CFB
		17		20	18	1.00	

TOTAL CONNECTED LOAD: 17.68 KVA — ALL BREAKERS ARE 1P–20A UNLESS OTHERWISE NOTED

PANEL NOTES: FED FROM BPZ – BLOWER BLDG 2

FINAL DRAWINGS - NOT RELEASED FOR CONSTRUCTION

072318DR172000

BRITTAIN ENGINEERING, INC.
CONSULTING MECHANICAL AND ELECTRICAL ENGINEERS
PO BOX 939 HICKORY, NC 28603
TEL. (828) 328-1813 FAX. (828) 328-1814

WK DICKSON
community infrastructure consultants
616 COLONNADE DRIVE
CHARLOTTE, NC 28205
(t)704-334-5348
(f)704-334-0078
WWW.WKDICKSON.COM
NC LICENSE NO.F-0374

NORTH CAROLINA PROFESSIONAL SEAL 7883 ENGINEER DONALD R. BRITTAIN 09/23/19

PROFESSIONAL SEAL

REVISION RECORD

NO.	DATE	DESCRIPTION	BY
A	10/9/18	ISSUE FOR OWNER/NCDEQ REVIEW	CRF

PROJECT NAME: KILLIAN CREEK WWTP PHASE 3 UPGRADE

DRAWING TITLE: SCHEDULES

PROJ. MGR.:	CRF
DESIGN BY:	
DRAWN BY:	
PROJ. DATE:	SEPT. 2018

DRAWING NUMBER: E0.4

WKD PROJ. NO.: 20170294.00.CL

COPYRIGHT © 2018 DICKSON & CO., INC. ALL RIGHTS RESERVED. REPRODUCTION OR USE OF THIS CONTENT OR THE DOCUMENT, IN WHOLE OR IN PART, WITHOUT WRITTEN PERMISSION OF DICKSON & CO., INC. IS PROHIBITED. ADDITIONS OR CHANGES TO THIS DOCUMENT MUST BE PRINTED ON THE ORIGINAL DOCUMENT MARKED WITH AN ORIGINAL SIGNATURE AND SEAL SHALL BE CONSIDERED TO BE VALID. RICE COPIES

EXISTING PANEL FUVH

14,000 AMPS RMS. SYM. I.C.
INTEGRATED EQUIPMENT RATING

SURFACE MOUNTED

277/480 VOLTS, 3 PHASE, 4 WIRE, 300 AMP MAIN BREAKER

SERVES	CIR LOAD	CIR NO.		CIR NO.	CIR LOAD	SERVES
EXISTING LOAD		1		2		EXISTING LOAD
		3		4		
		5		6		
		7		8		
		9		10		
		11		12		
		13		14		
		15		16		
		17		18		
		19		20		
		21		22		
		23		24		
		25		26		
		27		28		
		29		30		
*		31		32		
DISCFILTER #1		33	25	34		SPACE
		35		36		
*		37		38		EXISTING LOAD
DISCFILTER #2		39	25	40		
		41		42		

TOTAL CONNECTED LOAD: 233.10 KVA — ALL BREAKERS ARE 1P-20A UNLESS OTHERWISE NOTED

PANEL NOTES: * DISC FILTER AND ICA TO BE REMOVED DURING DEMOLITION.

RENOVATED PANEL FUVH

14,000 AMPS RMS. SYM. I.C.
INTEGRATED EQUIPMENT RATING

SURFACE MOUNTED

277/480 VOLTS, 3 PHASE, 4 WIRE, 300 AMP MAIN BREAKER

SERVES	CIR LOAD	CIR NO.		CIR NO.	CIR LOAD	SERVES
EXISTING LOAD		1		2		EXISTING LOAD
		3		4		
		5		6		
		7		8		
		9		10		
		11		12		
		13		14		
		15		16		
		17		18		
		19		20		
		21		22		
		23		24		
		25		26		
		27		28		
		29		30		
	6.67	31		32		
UV SYSTEM 3	6.67	33	35	34		SPACE
	6.67	35		36		
	6.67	37		38		EXISTING LOAD
UV SYSTEM 4	6.67	39	35	40		
	6.67	41		42		

TOTAL CONNECTED LOAD: 241.04 KVA — ALL BREAKERS ARE 1P-20A UNLESS OTHERWISE NOTED

PANEL NOTES: * DISC FILTER AND ICA TO BE REMOVED DURING DEMOLITION.

PANEL EFP

10,000 AMPS RMS. SYM. I.C.
INTEGRATED EQUIPMENT RATING

SURFACE MOUNTED

120/208 VOLTS, 3 PHASE, 4 WIRE, 100 AMP MAIN BREAKER

SERVES	CIR LOAD	CIR NO.		CIR NO.	CIR LOAD	SERVES
RECEPTACLES	0.54	1		2		SPARE
	0.54	3		4	2.25	WATER HEATER
	0.54	5	30	6	2.25	
	0.54	7		8		SPACE
SPARE		9		10		
		11		12		
		13		14		
		15		16		
		17		18		
		19		20		
		21		22		
		23		24		
		25		26		
		27		28		
		29		30		

TOTAL CONNECTED LOAD: 6.76 KVA — ALL BREAKERS ARE 1P-20A UNLESS OTHERWISE NOTED

PANEL NOTES:

PANEL EFH

35,000 AMPS RMS. SYM. I.C.
INTEGRATED EQUIPMENT RATING

SURFACE MOUNTED

277/480 VOLTS, 3 PHASE, 4 WIRE, 200 AMP MAIN BREAKER

SERVES	CIR LOAD	CIR NO.		CIR NO.	CIR LOAD	SERVES
LIGHTING – INDOOR	0.72	1		2	4.71	
– OUTDOOR	0.25	3	30	4	4.71	DISCFILTER #5 EFCP5
	6.67	5		6	4.71	
EUH-3EB, 4EB	6.67	7	30	8	4.71	
	6.67	9	30	10	4.71	DISCFILTER #4 EFCP4
	6.67	11		12	4.71	
EUH-1EB, 2EB	6.67	13	30	14	4.71	
	6.67	15	30	16	4.71	DISCFILTER #3 EFCP3
	0.61	17		18	4.71	
F-1EB, 2EB	0.61	19	30	20	4.71	
	0.61	21	30	22	4.71	DISCFILTER #2 EFCP2
SPACE		23		24	4.71	
		25		26	4.71	
		27	30	28	4.71	DISCFILTER #1 EFCP1
		29		30	4.71	
		31		32		SPACE
		33		34		
		35		36		
	2.25	37		38		
PANEL EFP (VIA TX EF – 45KVA)	2.25	39	50	40		
	2.25	41		42		

TOTAL CONNECTED LOAD: 120.23 KVA — ALL BREAKERS ARE 1P-20A UNLESS OTHERWISE NOTED

PANEL NOTES:

SWITCHBOARD "MSB2" SCHEDULE
2500A MAIN LUGS ONLY

480/277V, 3PH, 4 WIRE
30,000 AIC RATING

CIRCUIT	SERVING	BREAKER	POLES	TRIP	CONNECTED LOAD (KVA)	REMARKS
1	MCC2	1600	3	1600	1242	
2	BH2	200	3	100	53	
3	RDTH2	200	3	100	57	
4	SPH2	400	3	300	157	
5	SDH2	200	3	200	123	
6	EFH	200	3	200	120	
7	SPACE	400				
8		400				
9		200				
10		200				

TOTAL CONNECTED LOAD: 1752 KVA

SWITCHBOARD NOTES:

EXISTING PANEL SPP

10,000 AMPS RMS. SYM. I.C.
INTEGRATED EQUIPMENT RATING

SURFACE MOUNTED

120/208 VOLTS, 3 PHASE, 4 WIRE, 100 AMP MAIN BREAKER

SERVES	CIR LOAD	CIR NO.		CIR NO.	CIR LOAD	SERVES
EXISTING LOAD		1		2		EXISTING LOAD
SPARE		3		4		
SPACE		5		6		
SPARE		7		8		
		9		10		
EXISTING LOAD		11		12		
SPARE		13		14		
		15		16		
		17		18		
SPACE		19		20		SPACE
		21		22		
		23		24		
		25		26		
		27		28		
		29		30		

TOTAL CONNECTED LOAD: 10.50 KVA — ALL BREAKERS ARE 1P-20A UNLESS OTHERWISE NOTED

PANEL NOTES:

RENOVATED PANEL SPP

10,000 AMPS RMS. SYM. I.C.
INTEGRATED EQUIPMENT RATING

SURFACE MOUNTED

120/208 VOLTS, 3 PHASE, 4 WIRE, 100 AMP MAIN BREAKER

SERVES	CIR LOAD	CIR NO.		CIR NO.	CIR LOAD	SERVES
EXISTING LOAD		1		2		EXISTING LOAD
SPARE		3		4		
SPACE		5		6		
SPARE		7		8		
		9		10		
EXISTING LOAD		11		12		
SPARE		13		14		
		15		16		
		17		18		
SPACE		19		20		SPACE
		21		22		
		23		24		
		25		26		
		27		28	2.25	WATER HEATER
		29	30	30	2.25	

TOTAL CONNECTED LOAD: 10.50 KVA — ALL BREAKERS ARE 1P-20A UNLESS OTHERWISE NOTED

PANEL NOTES: EXISTING PANEL LOCATED IN EXISTING SLUDGE PUMP BLDG.
* INSTALL (1) 30A, 2-POLE BREAKER IN EXIST SPACES. RE-ARRANGE PANEL AND RE-LABEL AS REQUIRED.

- NOT RELEASED FOR CONSTRUCTION

FINAL DRAWINGS

072318DR172000

BRITTAIN ENGINEERING, INC.
CONSULTING MECHANICAL AND ELECTRICAL ENGINEERS
PO BOX 939 HICKORY, NC 28603
TEL. (828) 328-1913 FAX (828) 328-1814

WK DICKSON
community infrastructure consultants
616 COLONNADE DRIVE
CHARLOTTE, NC 28205
(t)704-334-5348
(f)704-334-0078
WWW.WKDICKSON.COM
NC LICENSE NO.F-0374

NORTH CAROLINA PROFESSIONAL SEAL 7883 ENGINEER DANIEL DEBRITAIN 10/23/18

PROFESSIONAL SEAL

REVISION RECORD

NO.	DATE	DESCRIPTION	BY
A	10/9/18	ISSUE FOR OWNER/NCDEQ REVIEW	CRF

PROJECT NAME: KILLIAN CREEK WWTP PHASE 3 UPGRADE

DRAWING TITLE: SCHEDUES

PROJ. MGR.:	CRF
DESIGN BY:	
DRAWN BY:	
PROJ. DATE:	SEPT. 2018

DRAWING NUMBER: E0.5

WKD PROJ. NO.: 20170294.00.CL

COPYRIGHT © 2018 DICKSON & CO., INC. ALL RIGHTS RESERVED. REPRODUCTION OR USE OF THIS CONTENT OR THIS DOCUMENT WITHOUT WRITTEN PERMISSION IS PROHIBITED. ADDITIONS OR CHANGES TO THIS DOCUMENT ARE NOT PERMITTED. THIS DOCUMENT IS VALID ONLY WHEN PRINTED ON THE LETTERHEAD OF THE DICKSON & CO., INC. AND BEARING THE ORIGINAL SIGNATURE AND SEAL SHALL BE CONSIDERED TO BE VALID. FACE COPIES

EXISTING PANEL MPA

10,000 AMPS RMS. SYM. I.C. INTEGRATED EQUIPMENT RATING — SURFACE MOUNTED

120/208 VOLTS, 3 PHASE, 4 WIRE, 100 AMP MAIN BREAKER

SERVES	CIR LOAD	CIR NO.	CIR NO.	CIR LOAD	SERVES
SPACE		1	2		EXISTING LOAD
EXISTING LOAD		3	4		↓
		5	6		SPACE
		7	8		
		9	10		
↓		11	12		↓
SPACE		13	14		
		15	16		
		17	18		
		19	20		
		21	22		
		23	24		
		25	26		
		27	28		
↓		29	30		↓

TOTAL CONNECTED LOAD: 12.50 KVA — ALL BREAKERS ARE 1P-20A UNLESS OTHERWISE NOTED

PANEL NOTES: LOCATED IN EXISTING MAINTENENCE BLDG

EXISTING PANEL FUVP

10,000 AMPS RMS. SYM. I.C. INTEGRATED EQUIPMENT RATING — SURFACE MOUNTED

120/208 VOLTS, 3 PHASE, 4 WIRE, 100 AMP MAIN BREAKER

SERVES	CIR LOAD	CIR NO.	CIR NO.	CIR LOAD	SERVES
SPACE		1	2		EXISTING LOAD
EXISTING LOAD		3	4		
		5	6		
		7	8		
		9	10		
↓		11	12		↓
SPACE		13	14		SPACE
		15	16		
		17	18		↓
		19	20		EXISTING LOAD
		21	22		
		23	24		
		25	26		
		27	28		
↓		29	30		↓

TOTAL CONNECTED LOAD: 16.1 KVA — ALL BREAKERS ARE 1P-20A UNLESS OTHERWISE NOTED

PANEL NOTES:

EXISTING PANEL FUVHA

14,000 AMPS RMS. SYM. I.C. INTEGRATED EQUIPMENT RATING — SURFACE MOUNTED

277/480 VOLTS, 3 PHASE, 4 WIRE, 100 AMP MAIN LUGS ONLY

SERVES	CIR LOAD	CIR NO.	CIR NO.	CIR LOAD	SERVES
EXISTING LOAD		1	2		EXISTING LOAD
		3	4		
		5	6		
		7	8		
		9	10		
↓		11	12		↓
SPACE		13	14		SPACE
		15	16		
		17	18		↓
		19	20		EXISTING LOAD
		21	22		
		23	24		↓
		25	26		DISCFILTER *
		27	28	30	CONTROL PANEL
↓		29	30		

TOTAL CONNECTED LOAD: 46.3 KVA — ALL BREAKERS ARE 1P-20A UNLESS OTHERWISE NOTED

PANEL NOTES: * DISC FILTER CONTROL PANEL TO BE REMOVED DURING DEMOLITION.

RENOVATED PANEL MPA

10,000 AMPS RMS. SYM. I.C. INTEGRATED EQUIPMENT RATING — SURFACE MOUNTED

120/208 VOLTS, 3 PHASE, 4 WIRE, 100 AMP MAIN BREAKER

SERVES	CIR LOAD	CIR NO.	CIR NO.	CIR LOAD	SERVES
SPACE		1	2		EXISTING LOAD
EXISTING LOAD		3	4		↓
		5	6		SPACE
		7	8		
		9	10		
↓		11	12		
HEADWORKS 2 – ULTRASONIC PROBE	0.50	13	14		
RECEPT– HEADWORKS 2 GRIT BLOWER	0.36	15	16		
↓ – HEADWORKS 2 CONTROLS	0.36	17	18		
HEAT TRACE – ROTARY BAR SCREEN	1.50	19	20		
SPACE		21	22		
		23	24		
		25	26		
		27	28		
↓		29	30		↓

TOTAL CONNECTED LOAD: 15.22 KVA — ALL BREAKERS ARE 1P-20A UNLESS OTHERWISE NOTED

PANEL NOTES: EXISTING LOADS INDICATED ARE FROM ORGINAL DRAWINGS. EC SHALL VERIFY PANEL, RE-ARRANGE AND RE-LABEL AS REQUIRED

RENOVATED PANEL FUVP

10,000 AMPS RMS. SYM. I.C. INTEGRATED EQUIPMENT RATING — SURFACE MOUNTED

120/208 VOLTS, 3 PHASE, 4 WIRE, 100 AMP MAIN BREAKER

SERVES	CIR LOAD	CIR NO.	CIR NO.	CIR LOAD	SERVES
AIR COMPRESSOR DRAIN		1	2		EXISTING LOAD
EXISTING LOAD	0.18	3	4		
		5	6		
		7	8		
		9	10		
↓		11	12		↓
HOIST RECEPTACLES	0.36	13	14		SPACE
SPACE		15	16		
		17	18		↓
		19	20		EXISTING LOAD
		21	22		
		23	24		
		25	26		
		27	28		
↓		29	30		↓

TOTAL CONNECTED LOAD: 16.64 KVA — ALL BREAKERS ARE 1P-20A UNLESS OTHERWISE NOTED

PANEL NOTES:

RENOVATED PANEL FUVHA

14,000 AMPS RMS. SYM. I.C. INTEGRATED EQUIPMENT RATING — SURFACE MOUNTED

277/480 VOLTS, 3 PHASE, 4 WIRE, 100 AMP MAIN LUGS ONLY

SERVES	CIR LOAD	CIR NO.	CIR NO.	CIR LOAD	SERVES
EXISTING LOAD		1	2		EXISTING LOAD
		3	4		
		5	6		
		7	8		
		9	10		
↓		11	12		↓
	2.11	13	14		SPACE
AIR COMPRESSOR	2.11	15	16	20	
UV 3,4	2.11	17	18		↓
	0.83	19	20		EXISTING LOAD
LOW FLOW RECIRC PUMP	0.83	21	22	20	
	0.83	23	24		↓
	0.61	25	26		
CHANNEL GATES	0.61	27	28	20 30	SPARE
#3, #4	0.61	29	30		

TOTAL CONNECTED LOAD: 42.82 KVA — ALL BREAKERS ARE 1P-20A UNLESS OTHERWISE NOTED

PANEL NOTES:

SWITCHBOARD "MSB" SCHEDULE
2500A MAIN LOCATED IN EXIST OFF/LAB BLDG

480/277V, 3PH, 4 WIRE
30,000 AIC RATING

CIRCUIT	SERVING	BREAKER	POLES	CONNECTED LOAD (KVA)	REMARKS
1	EXISTING LOAD	60	3	EXISTING	
2	SPACE	20	3		
3	EXISTING LOAD	300	3		
4	EXISTING LOAD	300	3		
5	EXISTING LOAD	300	3		
6	EXISTING LOAD	200	3		
7	EXISTING LOAD	30	3		
8	EXISTING LOAD	100	3	↓	
9	HEADWORKS CONTROL PANEL 2 *	30	3	14.42	
10	SPACE	30	3	EXISTING	
11	FUTURE	20	3		
12	EXISTING LOAD	125	3		
13	SP	20	3		
14	SP	20	3		
15	SP	20	3		
16	SP	20	3		
17	EXISTING LOAD	20	3		
18	EXISTING LOAD	20	3		
19	SPACE	20	3		
20	EXISTING LOAD	1200	3		
21	EXISTING LOAD	100	3		
22	SPARE				
23	SPARE	20	3		
24	SPARE	20	3	↓	

TOTAL CONNECTED LOAD: 1636.0 KVA (EXIST PLUS NEW LOADS)

SWITCHBOARD NOTES: EXISTING LOADS ARE FROM ORIGINAL DRAWINGS. EC SHALL VERIFY PANEL, RE-ARRANGE AND RE-LABEL AS REQUIRED
* PROVIDE BREAKER AS INDICATED

MOTOR CONTROL CENTER "MCC2" SCHEDULE
1,600A MAIN LUGS ONLY

480V, 3PH, 3 WIRE
35,000 MINIMUM AIC RATING

CIRCUIT	SERVING	NEMA SIZE	POLES	TRIP	CONNECTED LOAD (KVA)	STARTER DESCRIPTION
1	DIGESTER 3&4 BLOWER #5	4	3	200	103.10	RVAT
2	DIGESTER 3&4 BLOWER #6	4	3	200	103.10	RVAT
3	DIGESTER 3&4 BLOWER #7	4	3	200	103.10	RVAT
4	DIGESTER 3&4 BLOWER #8	4	3	200	103.10	RVAT
5	JET AERIATION PUMP 3–1	4	3	150	64.02	RVAT
6	JET AERIATION PUMP 3–2	4	3	150	64.02	RVAT
7	JET AERIATION PUMP 4–1	4	3	150	64.02	RVAT
8	JET AERIATION PUMP 4–2	4	3	150	64.02	RVAT
9	SBR3 SLUDGE TRANSFER PUMP	1	3	25	11.64	FVNR
10	SBR4 SLUDGE TRANSFER PUMP	1	3	25	11.64	FVNR
11	DIGESTER 3 JET AERIATION	4	3	60	27.10	RVAT
12	DIGESTER 4 JET AERIATION 1	4	3	60	27.10	RVAT
13	DIGESTER 4 JET AERIATION 2	4	3	60	27.10	RVAT
14	SLUDGE HOLDING JET AERIATION	4	3	60	27.10	RVAT
15	DIGESTER 3 SLUDGE PUMP	1	3	25	11.64	RVAT
16	DIGESTER 4 SLUDGE PUMP	1	3	25	11.64	RVAT
17	SLUDGE HOLDING TRANSFER PUMP	4	3	25	11.64	RVAT
18	SBR 3,4 BLOWER #1	0	3	200	103.10	C/B ONLY
19	SBR 3,4 BLOWER #2	0	3	200	103.10	C/B ONLY
20	SBR 3,4 BLOWER #3	0	3	200	103.10	C/B ONLY
21	SBR 3,4 BLOWER #4	0	3	200	103.10	C/B ONLY
22	SPACE					
23	SPACE					
24	SPACE					

TOTAL CONNECTED LOAD: 1247.51 KVA

NOTES: NEMA 1 INDOOR ENCLOSURE.

FINAL DRAWINGS - NOT RELEASED FOR CONSTRUCTION

072318DR172000

BRITTAIN ENGINEERING, INC.
CONSULTING MECHANICAL AND ELECTRICAL ENGINEERS
PO BOX 939 HICKORY, NC 28603
TEL. (828) 328-1813 FAX. (828) 328-1814

WK DICKSON
community infrastructure consultants
616 COLONNADE DRIVE
CHARLOTTE, NC 28205
(t)704-334-5348
(f)704-334-0078
WWW.WKDICKSON.COM
NC LICENSE NO.F-0374

NORTH CAROLINA PROFESSIONAL SEAL 7883 ENGINEER DANIEL DEWITT TAYLOR 09/23/18

PROFESSIONAL SEAL

REVISION RECORD

NO.	DATE	DESCRIPTION	BY
A	10/9/18	ISSUE FOR OWNER/NCDEQ REVIEW	CRF

PROJECT NAME: KILLIAN CREEK WWTP PHASE 3 UPGRADE

DRAWING TITLE: SCHEDULES

PROJ. MGR.:	CRF
DESIGN BY:	
DRAWN BY:	
PROJ. DATE:	SEPT. 2018
DRAWING NUMBER:	E0.6
WKD PROJ. NO.:	20170294.00.CL

COPYRIGHT © 2018 DICKSON & CO., INC. ALL RIGHTS RESERVED. REPRODUCTION OR USE OF THIS CONTENT OR THE DOCUMENT, IN WHOLE OR IN PART, WITHOUT WRITTEN PERMISSION OF DICKSON & CO., INC. IS PROHIBITED. ALL REPRODUCTIONS MUST BEAR THE COPYRIGHT NOTICE.
PRINT THE UNRAVEL OF THIS DOCUMENT MARKED WITH AN ORIGINAL SIGNATURE AND SEAL SHALL BE CONSIDERED TO BE VALID, TRUE COPIES

POWER RISER NOTES:

1. EC SHALL COORD W/ OWNER AND UTILITY TO EXTEND PRIMARY UTILITY LINES AS REQUIRED TO FEED NEW SERVICE. REFER ALSO TO SITE PLAN SHEET E0.8. EXTEND OH PRIMARY OVERHEAD AND/OR UNDERGROUND UTILITY LINES AS REQUIRED BY UTILITY TO PROPOSED UTILITY TRANSFORMER LOCATION INDICATED ON SHEET E0.8. VERIFY ALL REQUIREMENTS. INCLUDE ALL COSTS IN BID.
2. CONC XFMR PAD AS REQUIRED BY UTILITY.
3. 1"C AND METER SOCKET TO LOCATION REQUIRED BY UTILITY. PROVIDE PULL STRING IN CONDUIT.
4. 1500 KVA STAND BY GENERATOR W/ 2500A BREAKER. 277/480V, 3ø, 4–WIRE. REFER ALSO TO SPECIFICATION 26 32 13. PROVIDE CONC PAD AS REQUIRED BY MANUFACTURER.
5. CONNECT GENERATOR HEATER AS REQUIRED.
6. CONNECT GENERATOR BATTERY CHARGER AS REQUIRED.
7. 2" CONDUIT AND CIRCUITRY AS REQUIRED FOR REMOTE ANNUNICATOR W/ MANUAL "STOP" BUTTON. ANNUNICATOR AND STOP BUTTON TO BE LOCATED IN MAIN BLDG AT PLANT SITE ENTRANCE. VERIFY EXACT LOCATION OF EACH W/ OWNER.
8. (3) 1" CONDUITS. (1) FOR GENERATOR TO ATS CONTROLS. (1) FOR GENERATOR TO RTU FOR MONITORING. (1) SPARE. PROVIDE JUNCTION BOX(ES) AS REQUIRED. EC SHALL CONNECT GENERATOR/CONTROLS/MONITORING COMPLETE.
9. 6 PARALLEL RUNS OF (4) #600 KCMIL, #350 KCMIL GND, EACH IN 4"C.
10. 7 PARALLEL RUNS OF (4) #500 KCMIL, EACH IN 3½"C.
11. 600/2500/3/NEMA 1 ENCLOSED CIRCUIT BREAKER W/ GROUND FAULT PROTECTION AND ENERGY REDUCTION MAINT SWITCH. MUST BE THIRD PARTY LISTED AS SERVICE ENTRANCE. VERIFY EXACT REQUIREMENTS AND LOCATION FOR MOUNTING OR PROVIDE CONC BASE IF REQUIRED. INSTALL COMPLETE.
12. #6 GND, ½"C TO GROUND RODS (MIN OF 2).
13. #3/0 GND, ¾"C PER NEC 250. REFER ALSO TO "SERVICE ENTRANCE GROUNDING DETAIL".
14. 600/2500/3 AUTOMATIC TRANSFER SWITCH. REFER ALSO TO SPECIFICATION 26 36 23.
15. TYPE 1 SURGE SUPPRESSION DEVICE (SPD). UNIT TO BE RATED AT 200KA, 277/480V, 3ø, 4–WIRE. MINIMUM WIRE LENGTH AND BENDS. UNIT SHALL BE MOUNTED EXTERNALLY AND NO MORE THAN 6" FROM SWITCHBOARD. CONNECT W/ 4 #4, #4 GND, OR PER MANUFACTURER REQUIREMENTS. INCLUDE A MINIMUM OF 3 TWISTS IN THE CONDUCTORS OVER THEIR ENTIRE LENGTH.
16. INTERSYSTEM BONDING TERMINAL BOX. REFER TO DETAIL.
17. PROVIDE HOUSEKEEPING PAD (TYPICAL).
18. 4 PARALLEL RUNS OF (3) #600 KCMIL, #4/0 GND, EACH IN 3"C.
19. 4 #2, #2 GND, 1¼"C.
20. 3 #4, #8 GND, 1"C.
21. #6 GND, ½"C TO BLDG STEEL.
22. 4 #1/0, #6 GND, 2"C.
23. 4 #4, #10 GND, 1¼"C.
24. 2 PARALLEL RUNS OF 4 #1/0, #4 GND, EACH IN 2"C.
25. 3 #6, #10 GND, 1"C.
26. 4 #1/0, #6 GND, 2½"C.

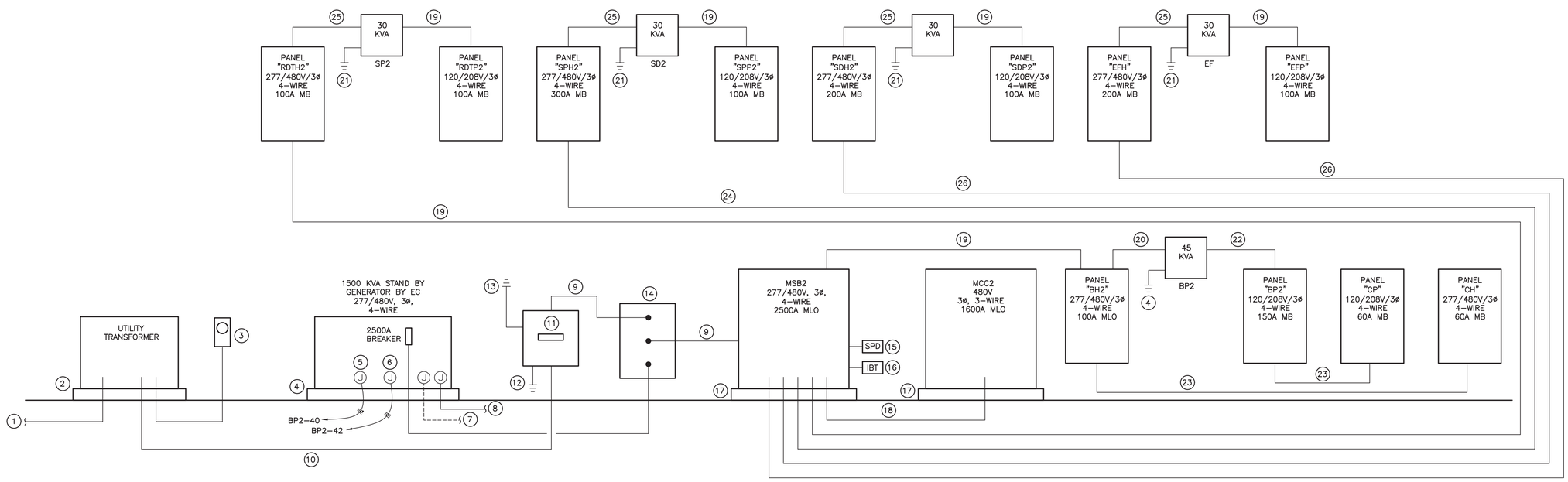

POWER RISER

NTS

MAIN GROUNDING SYSTEM NOTES:

1. #500 KCMIL, 1¼"C.
2. GROUND ROD IN INSPECTION WELL. REFER TO GROUNDING TEST HANDHOLD DETAIL ON SHEET E0.3. INSTALL W/ MINIMUM SPACING OF 20' BETWEEN GROUND ROD/WELL LOCATIONS.
3. 600/2500/3 ENCLOSED CIRCUIT BREAKER, SERVICE ENTRANCE RATED WITH GROUND FAULT PROTECTION.
4. GROUNDING BUS. REFER TO GROUNDING BUS DETAIL AND SPECIFICATIONS.
5. TO BLDG STEEL.
6. TO METALLIC WATER PIPING.
7. BOND TO REBAR IN CONC FOOTING.
8. #6, ¾"C.
9. #4, 1"C.

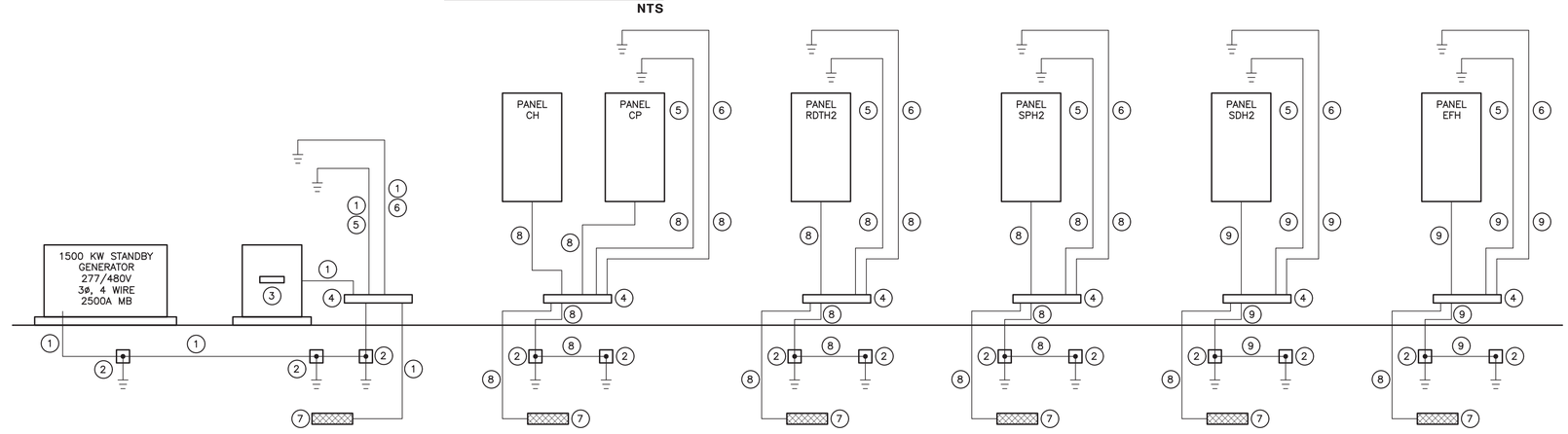

MAIN GROUNDING SYSTEM

NTS

- NOT RELEASED FOR CONSTRUCTION

FINAL DRAWINGS

WK DICKSON
community infrastructure consultants
616 COLONNADE DRIVE
CHARLOTTE, NC 28205
(t)704-334-5348
(f)704-334-0078
WWW.WKDICKSON.COM
NC LICENSE NO.F-0374

NORTH CAROLINA PROFESSIONAL SEAL 7883 ENGINEER DANIAL DEBERTRAND 09/25/18

PROFESSIONAL SEAL

REVISION RECORD

NO.	DATE	DESCRIPTION	BY
A	10/9/18	ISSUE FOR OWNER/NCDEQ REVIEW	CRF

PROJECT NAME: KILLIAN CREEK WWTP PHASE 3 UPGRADE

DRAWING TITLE: DETAILS

PROJ. MGR.:	CRF
DESIGN BY:	
DRAWN BY:	
PROJ. DATE:	SEPT. 2018
DRAWING NUMBER:	

E0.7

WKD PROJ. NO.: 20170294.00.CL

072618DR172000

BEI
BRITTAIN ENGINEERING, INC.
CONSULTING MECHANICAL AND ELECTRICAL ENGINEERS
PO BOX 939 HICKORY, NC 28603
TEL: (828) 328-1813 FAX: (828) 328-1814

COPYRIGHT © 2018 DICKSON & CO., INC. ALL RIGHTS RESERVED. REPRODUCTION OR USE OF THIS CONTENT OR THE DOCUMENT, IN WHOLE OR IN PART, WITHOUT WRITTEN PERMISSION OF DICKSON & CO., INC. IS PROHIBITED. ADDITIONS OR CHANGES TO THIS DOCUMENT AFTER PRINT THE ORIGINAL OF THIS DOCUMENT MARKED WITH AN ORIGINAL SIGNATURE AND SEAL SHALL BE CONSIDERED TO BE VALID. FACE COPIES

SITE CONTROL & INSTRUMENTATION SCHEDULE

TAG	DESCRIPTION	WIRING	CONNECT FROM	CONNECT TO	NOTES
GS2	GENERATOR START	3/4"C, #18 TSP	AUTOMATIC TRANSFER SWITCH	GENERATOR	RUN COMMAND
GEN2	GENERATOR STATUS	2#14, #14GND, 1"C 2#14 2#14 12#14	GENERATOR CONTROLLER	SCADA RTU 4 (IN BLOWER 2 BLDG)	GENERATOR RUNNING GENERATOR PRE-SHUDOWN ALARM GENERATOR SHUTDOWN ALARM SPARES
SL1	SCADA LOOP	1 1/2"C, FIBER OPTIC CABLE	SCADA BASE	SCADA RTU 1	EXISTS
SL2	SCADA LOOP	1 1/2"C, FIBER OPTIC CABLE	SCADA RTU 1	SCADA RTU 1	EXISTS – SEE NOTES
SL3	SCADA LOOP	1 1/2"C, FIBER OPTIC CABLE	SCADA RTU 2	SCADA RTU 1	EXISTS
SL4	SCADA LOOP	1 1/2"C, FIBER OPTIC CABLE	SCADA RTU 3	SCADA BASE	EXISTS
SL5	SCADA LOOP	1 1/2"C, FIBER OPTIC CABLE	SCADA RTU 1	SCADA RTU 4	
SL6	SCADA LOOP	1 1/2"C, FIBER OPTIC CABLE	SCADA RTU 4	SCADA RTU 5	
SL7	SCADA LOOP	1 1/2"C, FIBER OPTIC CABLE	SCADA RTU 5	SCADA RTU 2	

GENERAL NOTES:

- WASTE WATER TREATMENT PLANT MUST STAY IN OPERATION DURING ENTIRE PROJECT RENOVATION TO INCLUDE SCADA ALL RTU'S AND ALL CONTROLS AND INSTRUMENTATION. EC SHALL MAKE ALL TEMPORARY/FINAL CONNECTIONS AS REQUIRED TO PROVIDE FULL PLANT OPERATION. PROVIDE ALL TEMPORARY EQUIPMENT, CONDUITS, CIRCUITS, AND LABOR AS REQUIRED.
- ALL LIGHTING, LIGHTING CIRCUITS, SCADA RTU'S, SCADA LOOPS AND CONDUITS ARE SHOWN FOR REFERENCE ONLY. EC SHALL VERIFY EXACT LOCATION OF EACH AND MAKE CHANGES AS REQUIRED. INCLUDE ALL COSTS IN BID.
- COORD ANY SCADA, CONTROL OR INSTRUMENTATION OUTAGES W/ OWNER TO MAINTAIN PLANT OPERATION.
- "E" DENOTES EXIST TO REMAIN UNLESS OTHERWISE NOTED. FOR REFERENCE ONLY.

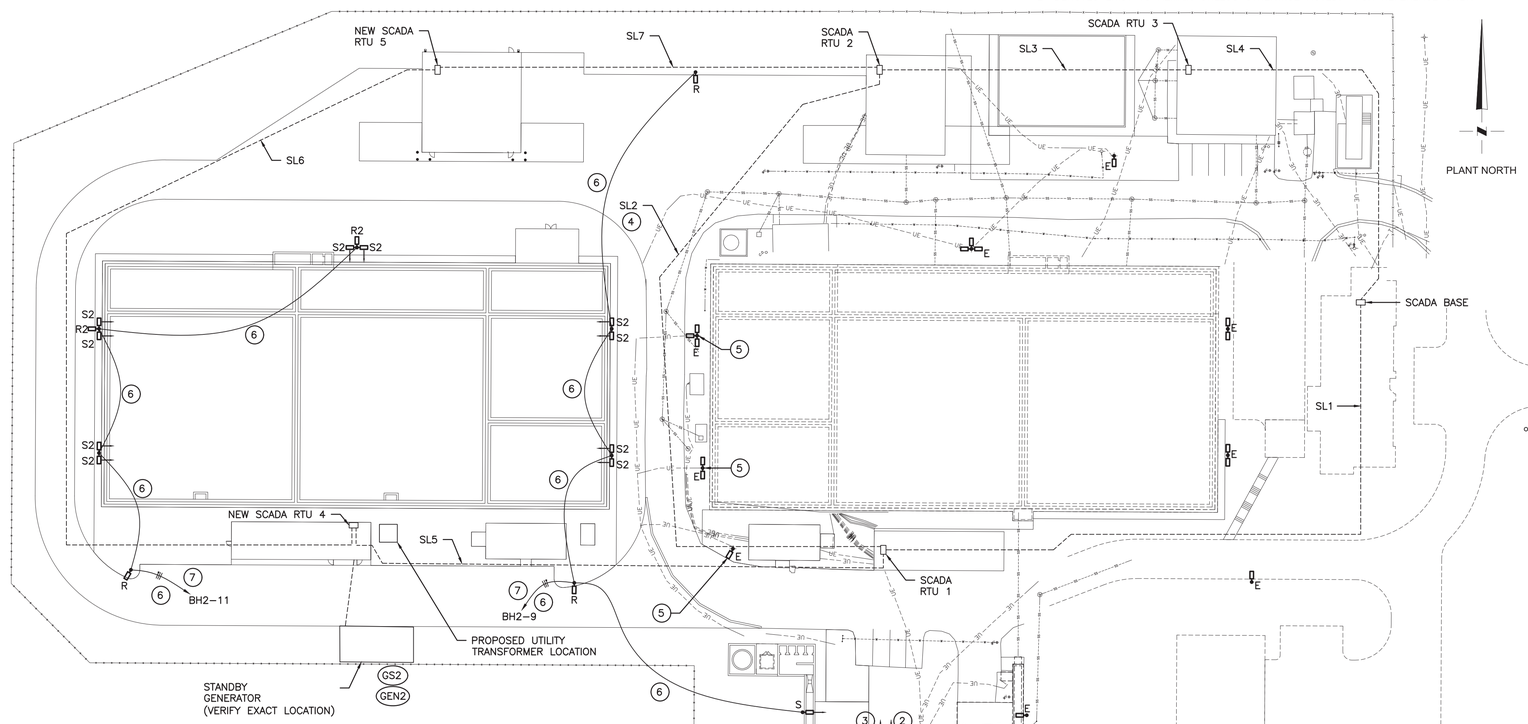

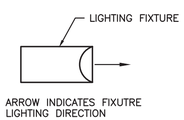

LIGHTING FIXTURE DETAIL

NTS

NOTES:

1. EXIST PLANS INDICATE 1" CONDUIT EXISTS TO PANEL MPA IN MAINT BLDG. VERIFY AND USE FOR NEW HEADWORKS POWER. REFER ALSO TO SHEET E1.1.
2. EXIST PLANS INDICATE 1" CONDUIT EXISTS TO PANEL MSB IN OFFICE/LAB BLDG. VERIFY AND USE FOR NEW HEADWORKS POWER. REFER ALSO TO SHEET E1.1.
3. EXIST PLANS INDICATE (2) 1" CONDUITS EXIST TO SCADA RTU 1 IN EXIST BLOWER BLDG. VERIFY AND USE FOR NEW HEADWORKS SCADA. REFER ALSO TO SHEET E1.1.
4. IT IS THE INTENT TO MAINTAIN SCADA LOOP SL2 IN PLACE. EC SHALL RELOCATE OR INSTALL NEW CIRCUIT AS REQUIRED FOR INSTALLATION OF NEW SBR, DIGESTER BASINS. PROVIDE TEMPORARY LOOP AS REQUIRED TO MAINTAIN PLANT OPERATION AT ALL TIMES.
5. FIXTURES TO REMAIN. RE-CIRCUIT AS REQUIRED FOR RENOVATIONS.
6. 2 #10, #10 GND, 1"C.
7. PROVIDE LINE VOLTAGE PHOTOCELL AND CONTACTOR TO CONTROL ALL SITE LIGHTING.
8. APPROX LOCATION OF UTILITY DEAD END POLE OF EXIST OH LINE. REFER TO POWER RISER FOR UTILITY POWER LINE EXTENSION DIRECTIONS.

SITE PLAN - ELECTRICAL

SCALE: 1" = 40'-0"

FINAL DRAWINGS - NOT RELEASED FOR CONSTRUCTION

08151BDR172000

BRITTAIN ENGINEERING, INC.
CONSULTING MECHANICAL AND ELECTRICAL ENGINEERS
PO BOX 939 HICKORY, NC 28603
TEL (828)326-1813 FAX (828)326-1814

WK DICKSON
community infrastructure consultants
616 COLONNADE DRIVE
CHARLOTTE, NC 28205
(t)704-334-5348
(f)704-334-0078
WWW.WKDICKSON.COM
NC LICENSE NO.F-0374

NORTH CAROLINA PROFESSIONAL SEAL 7883 ENGINEER DANIAL DOBERTINO 09/25/18

PROFESSIONAL SEAL

REVISION RECORD

NO.	DATE	DESCRIPTION	BY
A	10/9/18	ISSUE FOR OWNER/NCDEQ REVIEW	CRF

PROJECT NAME: KILLIAN CREEK WWTP PHASE 3 UPGRADE

DRAWING TITLE: SITE PLAN - ELECTRICAL

PROJ. MGR.:	CRF
DESIGN BY:	
DRAWN BY:	
PROJ. DATE:	SEPT. 2018

DRAWING NUMBER: E0.8

WKD PROJ. NO.: 20170294.00.CL

COPYRIGHT © 2018 DICKSON & CO., INC. ALL RIGHTS RESERVED. REPRODUCTION OR USE OF THIS CONTENT OR THE DOCUMENT, IN WHOLE OR IN PART, WITHOUT WRITTEN PERMISSION OF DICKSON & CO., INC. IS PROHIBITED. ALTERATIONS TO THIS DOCUMENT MADE BY OTHERS THAN THE DRAWER OF THE DOCUMENT MARKED WITH AN ORIGINAL SIGNATURE AND SEAL SHALL BE CONSIDERED TO BE NULL AND VOID.

HEADWORKS CONTROL & INSTRUMENTATION SCHEDULE

TAG	DESCRIPTION	WIRING	CONNECT FROM	CONNECT TO	NOTES
GAPH	GRIT AIRLIFT PIPING HEAT	#12, #12N, #12 GND, 3/4"C	HEADWORKS CONTROL PANEL (HWCP2)	GRIT ARILIFT PIPING HEAT TRACE	120V; MOUNT J–BOX OUTSIDE OF HAZARDOUS LOCATION
GCSV	GRIT CHAMBER SOLENOID VALVES (V–1004, V–1005)	3#14, #14 GND, 3/4"C 3#14	HEADWORKS CONTROL PANEL (HWCP2)	AIR SCOUR SOLENOID VALVE AIR LIFT SOLENOID VALVE	
GMOT	GRIT MOTOR OVER TEMPERATURE (GS–101)	2#14, #14 GND, 3/4"C	GRIT MOTOR WINDING THERMOSENSORS	HEADWORKS CONTROL PANEL (HWCP2)	MOUNT J–BOX OUTSIDE OF HAZARDOUS LOCATION
HWL	HEADWORKS LEVEL (LSH–102)	2#14, #14 GND, 3/4"C 2#14	HEADWORKS CONTROL PANEL (HWCP2)	HIGH LEVEL FLOAT SWITCH HIGH ALARM LEVEL FLOAT SWITCH	SPLICE TO FLOAT CABLES IN J–BOX MTD 18" MIN ABOVE STRUCTURE
HWS	HEADWORKS STATUS	2#14, #14 GND, 1"C 2#14 2#14 2#14 2#14 2#14 2#14 14#14	HEADWORKS CONTROL PANEL (HWCP2)	SCADA RTU1 (LOCATED IN EXIST BLOWER BLDG)	SCREEN RUN INDICATION (RBS–101) VORTEX GRIT GS–101 RUN INDICATION GRIT CLASSIFIER RUN INDICATION BLOWER B–201 RUN INDICATION BLOWER B–202 RUN INDICATION COMMON MALFUNCTION ALARM SCREEN HIGH WATER ALARM SPARES
INFL2	INFLUENT FLOW METER (FE–101, FR/T–101)	MFR CABLE #18 TSP, 3/4"C #18 TSP, 3/4"C	FLOW METER TRANSDUCER FLOW METER TRANSMITTER/RECORDER FLOW METER TRANSMITTER/RECORDER	FLOW METER TRANSMITTER/RECORDER SCDA RTU1 (LOCATED IN EXIST BLOWER BLDG) FLOW METER TRANSMITTER / RECORDER OF EXISTING HEADWORKS FLUME	4–20mA 4–20mA, VERIFY CABLING REQUIRED
PWH	PLANT WATER HEAT	#12, #12N, #12 GND, 3/4"C	HEADWORKS CONTROL PANEL (HWCP2)	PLANT WATER PIPING HEAT TRACE	120V; MOUNT J–BOX OUTSIDE OF HAZARDOUS LOCATION
SCPS	SCREEN PROXIMITY SENSOR	3#14, #14 GND, 3/4"C	PROXIMITY SENSOR	HEADWORKS CONTROL PANEL (HWCP2)	VERIFY CIRCUITRY REQUIRED WITH EQUIPMENT SUBMITTALS
SCSV	SCREEN SOLENOID VALVES	3#14, #14 GND, 3/4"C 3#14 3#14	HEADWORKS CONTROL PANEL (HWCP2)	SCREEN LOWER TUBE WATER SOLENOID VALVE SCREEN UPPER TUBE WATER SOLENOID VALVE SCREEN DEWATER CHAMBER WATER SOLENOID VALVE	

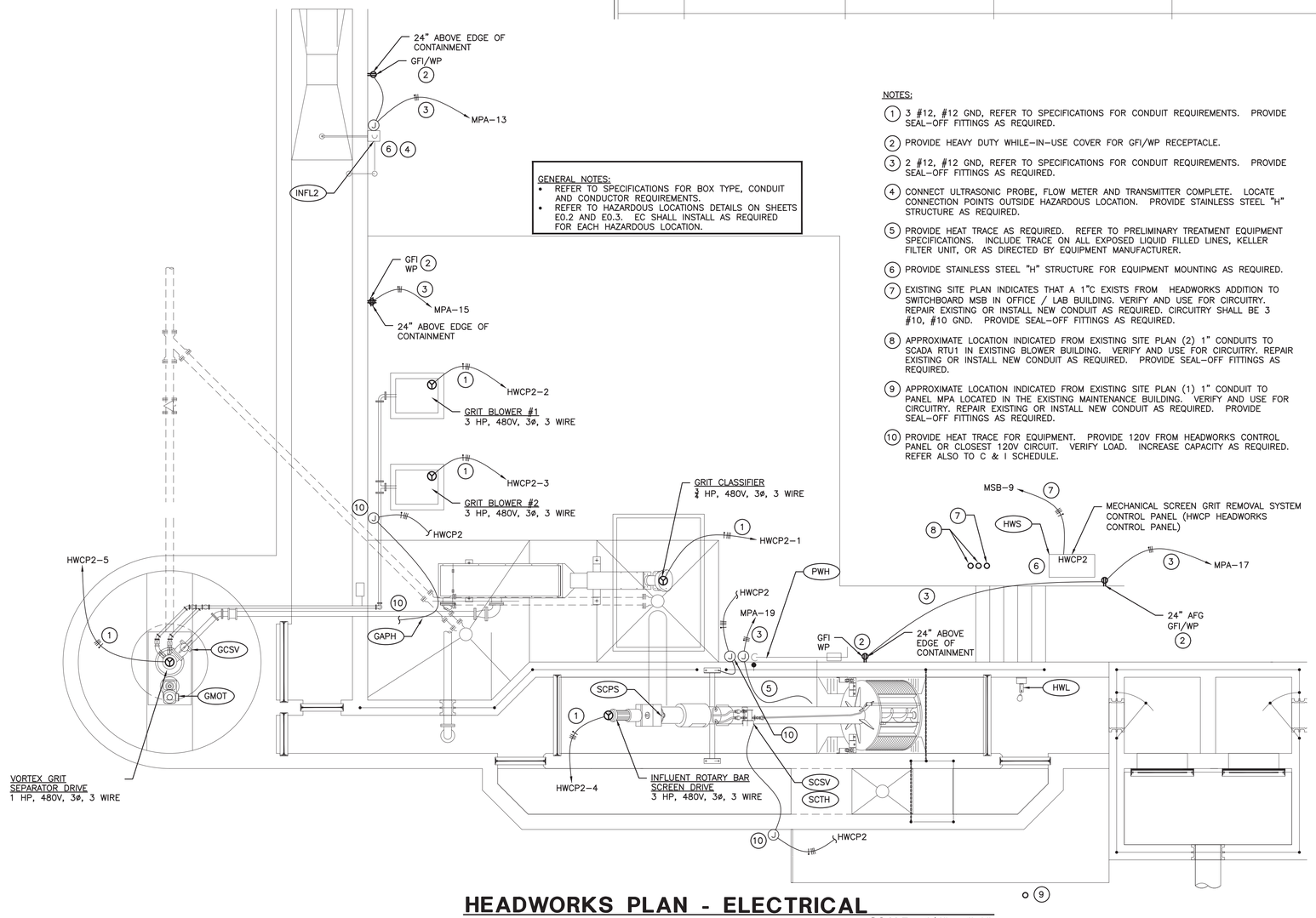

GENERAL NOTES:
- REFER TO SPECIFICATIONS FOR BOX TYPE, CONDUIT AND CONDUCTOR REQUIREMENTS.
- REFER TO HAZARDOUS LOCATIONS DETAILS ON SHEETS E0.2 AND E0.3. EC SHALL INSTALL AS REQUIRED FOR EACH HAZARDOUS LOCATION.

NOTES:

1. 3 #12, #12 GND, REFER TO SPECIFICATIONS FOR CONDUIT REQUIREMENTS. PROVIDE SEAL–OFF FITTINGS AS REQUIRED.
2. PROVIDE HEAVY DUTY WHILE–IN–USE COVER FOR GFI/WP RECEPTACLE.
3. 2 #12, #12 GND, REFER TO SPECIFICATIONS FOR CONDUIT REQUIREMENTS. PROVIDE SEAL–OFF FITTINGS AS REQUIRED.
4. CONNECT ULTRASONIC PROBE, FLOW METER AND TRANSMITTER COMPLETE. LOCATE CONNECTION POINTS OUTSIDE HAZARDOUS LOCATION. PROVIDE STAINLESS STEEL "H" STRUCTURE AS REQUIRED.
5. PROVIDE HEAT TRACE AS REQUIRED. REFER TO PRELIMINARY TREATMENT EQUIPMENT SPECIFICATIONS. INCLUDE TRACE ON ALL EXPOSED LIQUID FILLED LINES, KELLER FILTER UNIT, OR AS DIRECTED BY EQUIPMENT MANUFACTURER.
6. PROVIDE STAINLESS STEEL "H" STRUCTURE FOR EQUIPMENT MOUNTING AS REQUIRED.
7. EXISTING SITE PLAN INDICATES THAT A 1"C EXISTS FROM HEADWORKS ADDITION TO SWITCHBOARD MSB IN OFFICE / LAB BUILDING. VERIFY AND USE FOR CIRCUITRY. REPAIR EXISTING OR INSTALL NEW CONDUIT AS REQUIRED. CIRCUITRY SHALL BE 3 #10, #10 GND. PROVIDE SEAL–OFF FITTINGS AS REQUIRED.
8. APPROXIMATE LOCATION INDICATED FROM EXISTING SITE PLAN (2) 1" CONDUITS TO SCADA RTU1 IN EXISTING BLOWER BUILDING. VERIFY AND USE FOR CIRCUITRY. REPAIR EXISTING OR INSTALL NEW CONDUIT AS REQUIRED. PROVIDE SEAL–OFF FITTINGS AS REQUIRED.
9. APPROXIMATE LOCATION INDICATED FROM EXISTING SITE PLAN (1) 1" CONDUIT TO PANEL MPA LOCATED IN THE EXISTING MAINTENANCE BUILDING. VERIFY AND USE FOR CIRCUITRY. REPAIR EXISTING OR INSTALL NEW CONDUIT AS REQUIRED. PROVIDE SEAL–OFF FITTINGS AS REQUIRED.
10. PROVIDE HEAT TRACE FOR EQUIPMENT. PROVIDE 120V FROM HEADWORKS CONTROL PANEL OR CLOSEST 120V CIRCUIT. VERIFY LOAD. INCREASE CAPACITY AS REQUIRED. REFER ALSO TO C & I SCHEDULE.

HEADWORKS PLAN - ELECTRICAL

SCALE: 1/4" = 1'-0"

FINAL DRAWINGS - NOT RELEASED FOR CONSTRUCTION

WK DICKSON
community infrastructure consultants
616 COLONNADE DRIVE
CHARLOTTE, NC 28205
(t)704-334-5348
(f)704-334-0078
WWW.WKDICKSON.COM
NC LICENSE NO.F-0374

NORTH CAROLINA PROFESSIONAL SEAL 7883 ENGINEER DANIEL DEWITT BRITTAIN 10/23/18

PROFESSIONAL SEAL

REVISION RECORD

NO.	DATE	DESCRIPTION	BY
A	10/9/18	ISSUE FOR OWNER/NCDEQ REVIEW	CRF

PROJECT NAME: KILLIAN CREEK WWTP PHASE 3 UPGRADE

DRAWING TITLE: HEADWORKS ELECTRICAL

PROJ. MGR.:	CRF
DESIGN BY:	
DRAWN BY:	
PROJ. DATE:	SEPT. 2018

DRAWING NUMBER: E1.1

WKD PROJ. NO.: 20170294.00.CL

07131BDR172000

BRITTAIN ENGINEERING, INC.
CONSULTING MECHANICAL AND ELECTRICAL ENGINEERS
PO BOX 939 HICKORY, NC 28603
TEL (828)328-1813 FAX (828)328-1814

COPYRIGHT © WK DICKSON & CO., INC. ALL RIGHTS RESERVED. REPRODUCTION OR USE OF THE CONTENTS OF THIS DOCUMENT, ADDITIONS OR DELETIONS TO THIS DOCUMENT, IN WHOLE OR IN PART, WITHOUT WRITTEN CONSENT OF WK DICKSON & CO., INC., IS PROHIBITED. ONLY COPIES FROM THE ORIGINAL OF THIS DOCUMENT MARKED WITH AN ORIGINAL SIGNATURE AND SEAL SHALL BE CONSIDERED TO BE VALID, TRUE COPIES.

NOTE:
REFER TO HAZARDOUS LOCATIONS DETAILS ON SHEETS E0.2 AND E0.3. EC SHALL INSTALL AS REQUIRED FOR EACH HAZARDOUS LOCATION.

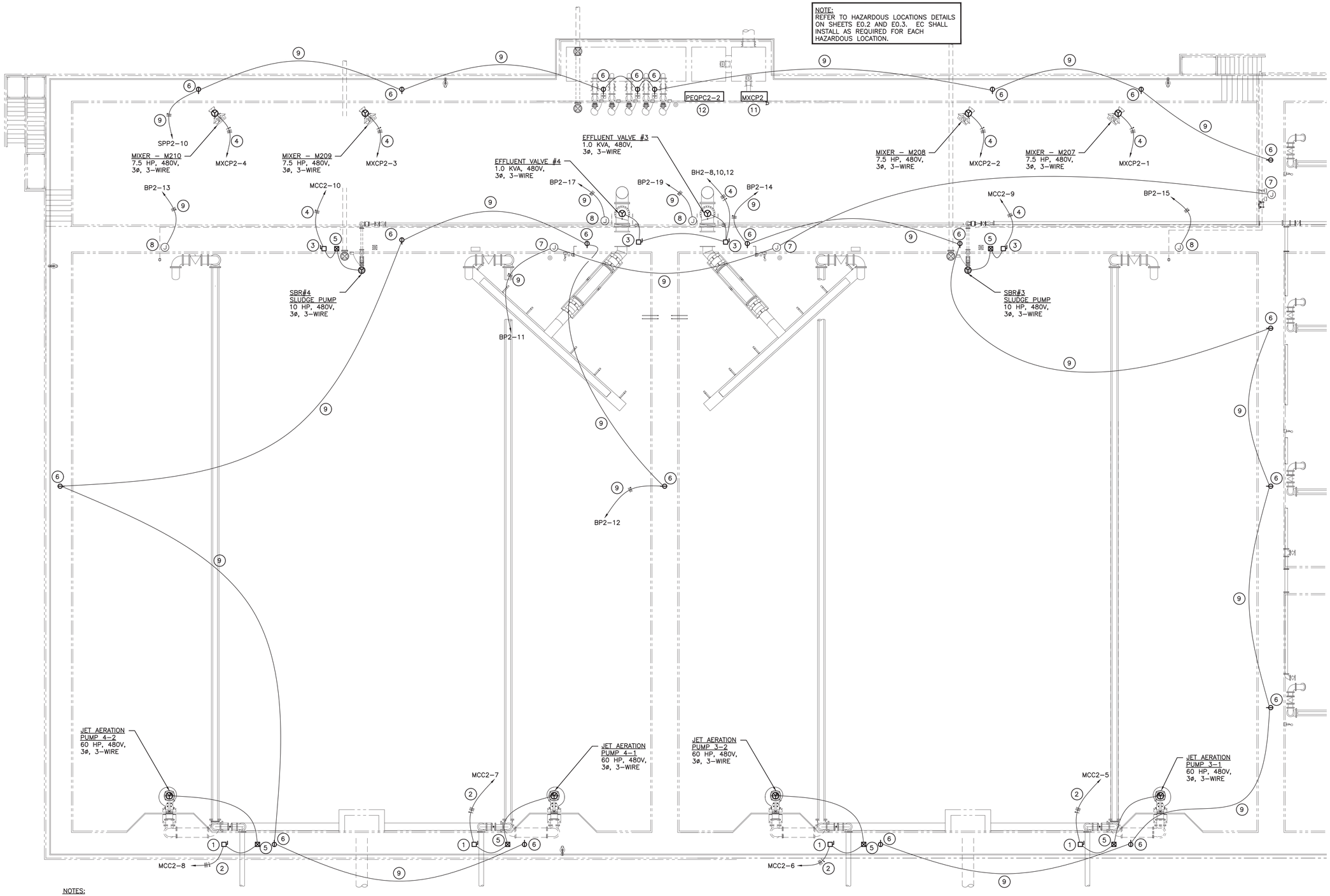

NOTES:

1. 600/200/3, NON-FUSED DISCONNECT.
2. 3 #1/0, #6 GND, 2"C. PROVIDE SEAL-OFF FITTINGS AS REQUIRED.
3. 600/30/3/4XSS, NON-FUSED DISCONNECT.
4. 3 #10, #10 GND, ¾"C. PROVIDE SEAL-OFF FITTINGS AS REQUIRED.
5. HAND-OFF-REMOTE SWITCH SHALL BE NEMA 4XSS ENCLOSURE. VOLTAGE AND AMPERAGE RATING PER CIRCUIT REQUIREMENTS.
6. L5-30 RECEPTACLE MOUNTED 24" ABOVE EDGE OF CONTAINMENT. REFER TO HAZARDOUS AREAS DETAILS. PROVIDE HEAVY DUTY WHILE-IN-USE COVER. VERIFY EXACT LOCATION W/ OWNER.
7. POWER INSTRUMENTATION AS REQUIRED. PROVIDE SEAL-OFF FITTINGS AS REQUIRED.
8. POWER FOR HEAT TRACE. PROVIDE AS REQUIRED. VERIFY QUANTITY OF TRACE, LOAD AND LOCATION. INSTALL COMPLETE.
9. 2 #10, #10 GND, ¾"C. PROVIDE SEAL-OFF FITTINGS AS REQUIRED.
10. SBR PLC CONTROL PANEL SHALL BE INSTALLED IN EXIST OFF/LAB BLDG AND CONNECTED PER MANUFACTURER'S REQUIREMENTS TO POWER AND TO EXIST SBR #1,2 CONTROL PANEL. VERIFY EXACT LOCATION W/ OWNER.
11. VERIFY EXACT REQUIREMENTS AND LOCATION FOR MIXER PUMP CONTROL PANEL. REFER ALSO TO SHEET E2.4.
12. VERIFY EXACT REQUIREMENTS AND LOCATION FOR POST EQ PUMP CONTROL PANEL. REFER ALSO TO SHEET E2.4.

PARTIAL SBR PLAN - ELECTRICAL

SCALE: 1/8" = 1'-0"

071118DR172000

BRITTAIN ENGINEERING, INC.
CONSULTING MECHANICAL AND ELECTRICAL ENGINEERS
PO BOX 939 HICKORY, NC 28603
TEL (828) 328-1813 FAX (828) 328-1814

FINAL DRAWINGS - NOT RELEASED FOR CONSTRUCTION

WK DICKSON
community infrastructure consultants
616 COLONNADE DRIVE
CHARLOTTE, NC 28205
(t)704-334-5348
(f)704-334-0078
WWW.WKDICKSON.COM
NC LICENSE NO.F-0374

NORTH CAROLINA PROFESSIONAL SEAL 7883 ENGINEER DONALD BRITTAIN 09/23/19
PROFESSIONAL SEAL

REVISION RECORD

NO.	DATE	DESCRIPTION	BY
A	10/9/18	ISSUE FOR OWNER/NCDEQ REVIEW	CRF

PROJECT NAME: KILLIAN CREEK WWTP PHASE 3 UPGRADE

DRAWING TITLE: SBR ELECTRICAL

PROJ. MGR.:	CRF
DESIGN BY:	
DRAWN BY:	
PROJ. DATE:	SEPT. 2018
DRAWING NUMBER:	E2.1
WKD PROJ. NO.:	20170294.00.CL

COPYRIGHT © 2018 DICKSON & CO., INC. ALL RIGHTS RESERVED. REPRODUCTION OR USE OF THIS CONTENT OR THE DOCUMENT, IN WHOLE OR IN PART, WITHOUT WRITTEN PERMISSION OF DICKSON & CO., INC. IS PROHIBITED. ADDITIONS OR CHANGES TO THIS DOCUMENT AFTER PRINT PRODUCTION MARKED WITH AN ORIGINAL SIGNATURE AND SEAL SHALL BE CONSIDERED TO BE VALID. RAE COPIES

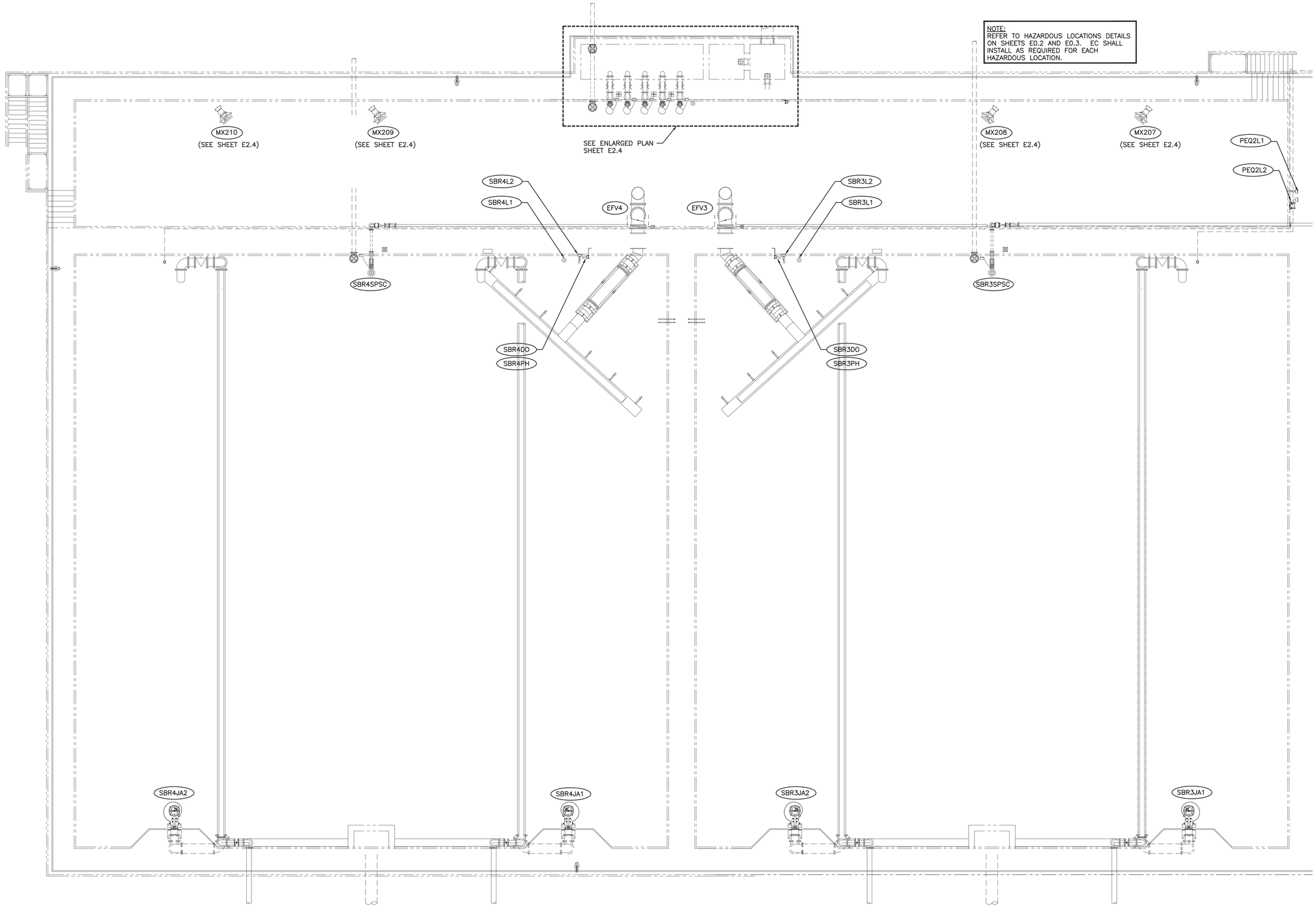

PARTIAL SBR PLAN
INSTRUMENTATION & CONTROL

SCALE: 1/8" = 1'-0"

071018DR172000

BRITTAIN ENGINEERING, INC.
CONSULTING MECHANICAL AND ELECTRICAL ENGINEERS
PO BOX 939 HICKORY, NC 28603
TEL. (828) 328-1813 FAX. (828) 328-1814

FINAL DRAWINGS - NOT RELEASED FOR CONSTRUCTION

WK DICKSON
community infrastructure consultants
616 COLONNADE DRIVE
CHARLOTTE, NC 28205
(t)704-334-5348
(f)704-334-0078
WWW.WKDICKSON.COM
NC LICENSE NO.F-0374

NORTH CAROLINA PROFESSIONAL SEAL 7883 ENGINEER DANIEL DEWITT TRAIN 10/23/18

PROFESSIONAL SEAL

REVISION RECORD

NO.	DATE	DESCRIPTION	BY
A	10/9/18	ISSUE FOR OWNER/NCDEQ REVIEW	CRF

PROJECT NAME: KILLIAN CREEK WWTP PHASE 3 UPGRADE

DRAWING TITLE: SBR ELECTRICAL

PROJ. MGR.:	CRF
DESIGN BY:	
DRAWN BY:	
PROJ. DATE:	SEPT. 2018
DRAWING NUMBER:	E2.2
WKD PROJ. NO.:	20170294.00.CL

COPYRIGHT © 2018 DICKSON & CO., INC. ALL RIGHTS RESERVED. REPRODUCTION OR USE OF THIS CONTENT OR THE DOCUMENT, IN WHOLE OR IN PART, WITHOUT WRITTEN PERMISSION OF DICKSON & CO., INC. IS PROHIBITED. ADDITIONS OR CHANGES TO THIS DOCUMENT AFTER IT HAS BEEN ISSUED FOR CONSTRUCTION MAY NOT BE MADE. PRINT THE UNMASK OF THIS DOCUMENT MARKED WITH AN ORIGINAL SIGNATURE AND SEAL SHALL BE CONSIDERED TO BE VALID. RAE COPIES

SBR CONTROL & INSTRUMENTATION SCHEDULE

TAG	DESCRIPTION	WIRING	CONNECT FROM	CONNECT TO	NOTES
SBR3DO	SBR #3 DISSOLVED OXYGEN	MFG CABLE 3/4"C, #18 TSP	PRESSURE TRANSDUCER LEVEL TRANSMITTER	LEVEL TRANSMITTER SBR CONTROL PANEL (SBRCP2)	DO & PH MAY BE COMBINED AS ONE UNIT – VERIFY 4–20mA
SBR3L1	SBR #3 LEVEL	MFG CABLE 3/4"C, #18 TSP	PRESSURE TRANSDUCER LEVEL TRANSMITTER	LEVEL TRANSMITTER SBR CONTROL PANEL (SBRCP2)	4–20mA
SBR3L2	SBR #3 LEVEL	MFG CABLE 3/4"C, #18 TSP	FLOAT SWITCHES JUNCTION BOX	JUNCTION BOX SBR CONTROL PANEL (SBRCP2)	4–20mA
SBR3JA1	SBR #3 JET AERATION #1 CONTROL & STATUS	MFG CABLE 2#14, #12GND, 3/4"C 2#14 4#14 4#14	PUMP MOTOR H–O–R / JUNCTION BOX	THROUGH DISCONNECT TO ADJACENT H–O–R JUNCTION BOX SBR CONTROL PANEL (SBRCP2)	H–O–R = HAND–OFF–REMOTE SELECTOR SEAL FAILURE OVER TEMPERATURE H–O–R CONTROL CIRCUITRY SPARES
SBR3JA2	SBR #3 JET AERATION #2 CONTROL & STATUS	MFG CABLE 2#14, #12GND, 3/4"C 2#14 4#14 4#14	PUMP MOTOR H–O–R / JUNCTION BOX	THROUGH DISCONNECT TO ADJACENT H–O–R JUNCTION BOX SBR CONTROL PANEL (SBRCP2)	H–O–R = HAND–OFF–REMOTE SELECTOR SEAL FAILURE OVER TEMPERATURE H–O–R CONTROL CIRCUITRY SPARES
SBR3PH	SBR #3 PH	MFG CABLE 3/4"C, #18 TSP	pH SENSOR pH TRANSMITTER	pH TRANSMITTER SBC CONTROL PANEL (SBRCP2)	DO & PH MAY BE COMBINED AS ONE UNIT – VERIFY 4–20mA
SBR3SPSC	SBR #3 SLUDGE PUMP CONTROL & STATUS	MFG CABLE 2#14, #12GND, 3/4"C 2#14 4#14 4#14	PUMP MOTOR H–O–R / JUNCTION BOX	THROUGH DISCONNECT TO ADJACENT H–O–R JUNCTION BOX SBR CONTROL PANEL (SBRCP2)	H–O–R = HAND–OFF–REMOTE SELECTOR SEAL FAILURE OVER TEMPERATURE H–O–R CONTROL CIRCUITRY SPARES
SBR4DO	SBR #4 DISSOLVED OXYGEN	MFG CABLE 3/4"C, #18 TSP	PRESSURE TRANSDUCER LEVEL TRANSMITTER	LEVEL TRANSMITTER SBC CONTROL PANEL (SBRCP2)	DO & PH MAY BE COMBINED AS ONE UNIT – VERIFY 4–20mA
SBR4L1	SBR #4 LEVEL	MFG CABLE 3/4"C, #18 TSP	PRESSURE TRANSDUCER LEVEL TRANSMITTER	LEVEL TRANSMITTER SBC CONTROL PANEL (SBRCP2)	4–20mA
SBR4L2	SBR #4 LEVEL	MFG CABLE 3/4"C, #18 TSP	FLOAT SWITCHES JUNCTION BOX	JUNCTION BOX SBR CONTROL PANEL (SBRCP2)	4–20mA
SBR4JA1	SBR #4 JET AERATION #1 CONTROL & STATUS	MFG CABLE 2#14, #12GND, 3/4"C 2#14 4#14 4#14	MIXER MOTOR H–O–R / JUNCTION BOX	THROUGH DISCONNECT TO ADJACENT H–O–R JUNCTION BOX SBR CONTROL PANEL (SBRCP2)	H–O–R = HAND–OFF–REMOTE SELECTOR SEAL FAILURE OVER TEMPERATURE H–O–R CONTROL CIRCUITRY SPARES
SBR4JA2	SBR #4 JET AERATION #2 CONTROL & STATUS	MFG CABLE 2#14, #12GND, 3/4"C 2#14 4#14 4#14	MIXER MOTOR H–O–R / JUNCTION BOX	THROUGH DISCONNECT TO ADJACENT H–O–R JUNCTION BOX SBR CONTROL PANEL (SBRCP2)	
SBR4PH	SBR #4 PH	MFG CABLE 3/4"C, #18 TSP	pH SENSOR pH TRANSMITTER	pH TRANSMITTER SBC CONTROL PANEL (SBRCP2)	DO & PH MAY BE COMBINED AS ONE UNIT – VERIFY 4–20mA
SBR4SPSC	SBR #4 SLUDGE PUMP CONTROL & STATUS	MFG CABLE 2#14, #12GND, 3/4"C 2#14 4#14 4#14	PUMP MOTOR H–O–R / JUNCTION BOX	THROUGH DISCONNECT TO ADJACENT H–O–R JUNCTION BOX SBR CONTROL PANEL (SBRCP2)	H–O–R = HAND–OFF–REMOTE SELECTOR SEAL FAILURE OVER TEMPERATURE H–O–R CONTROL CIRCUITRY SPARES
EFV3	EFFLUENT VALVE #3	3#14, #14GND, 3/4"C 4#14 4#14	SBR CONTROL PANEL (SBRCP2) VALVE #3 ACTUATOR	VALVE #3 ACTUATOR SBR CONTROL PANEL (SBRCP2)	OPEN/CLOSE COMMANDS OPEN/CLOSE POSITIONS, HOA IN HAND SPARES
EFV4	EFFLUENT VALVE #4	3#14, #14GND, 3/4"C 4#14 4#14	SBR CONTROL PANEL (SBRCP2) VALVE #4 ACTUATOR	VALVE #4 ACTUATOR SBR CONTROL PANEL (SBRCP2)	OPEN/CLOSE COMMANDS OPEN/CLOSE POSITIONS, HOA IN HAND SPARES

FINAL DRAWINGS - NOT RELEASED FOR CONSTRUCTION

050818DR172000

BRITTAIN ENGINEERING, INC.
CONSULTING MECHANICAL AND ELECTRICAL ENGINEERS
PO BOX 939 HICKORY, NC 28603
TEL. (828) 326-1913 FAX. (828) 326-1914

WK DICKSON
community infrastructure consultants
616 COLONNADE DRIVE
CHARLOTTE, NC 28205
(t)704-334-5348
(f)704-334-0078
WWW.WKDICKSON.COM
NC LICENSE NO.F-0374

NORTH CAROLINA PROFESSIONAL SEAL 7883 ENGINEER DANIAL DEWITT TAYLOR 09/25/18

PROFESSIONAL SEAL

REVISION RECORD

NO.	DATE	DESCRIPTION	BY
A	10/9/18	ISSUE FOR OWNER/NCDEQ REVIEW	CRF

PROJECT NAME: KILLIAN CREEK WWTP PHASE 3 UPGRADE

DRAWING TITLE: SBR CONTROL AND INSTRUMENTATION

PROJ. MGR.:	CRF
DESIGN BY:	
DRAWN BY:	
PROJ. DATE:	SEPT. 2018

DRAWING NUMBER: E2.3

WKD PROJ. NO.: 20170294.00.CL

COPYRIGHT © 2018 DICKSON & CO., INC. ALL RIGHTS RESERVED. REPRODUCTION OR USE OF THIS CONTENT OR THE DOCUMENT, IN WHOLE OR IN PART, WITHOUT WRITTEN PERMISSION OF DICKSON & CO., INC. IS PROHIBITED. ONLY THE ORIGINAL DOCUMENT MARKED WITH AN ORIGINAL SIGNATURE AND SEAL SHALL BE CONSIDERED TO BE VALID. FACE COPIES PRINT THE OPENING OF THIS DOCUMENT MARKED WITH AN ORIGINAL SIGNATURE AND SEAL SHALL BE CONSIDERED TO BE VALID. FACE COPIES

POST EQUALIZATION TRANSFER PUMP CONTROL & INSTRUMENTATION SCHEDULE

TAG	DESCRIPTION	WIRING	CONNECT FROM	CONNECT TO	NOTES
PEQP206	PUMP P-206 STATUS & CONTOL	MFG CABLE	PUMP MOTOR	PST EQ PUMP CONTROL PEQPCP2 (CP-201)	PUMP SEAL FAILURE INDICATION PUMP OVER TEMPERATURE INDICATION
PEQP207	PUMP P-207 STATUS & CONTOL	MFG CABLE	PUMP MOTOR	PST EQ PUMP CONTROL PEQPCP2 (CP-201)	PUMP SEAL FAILURE INDICATION PUMP OVER TEMPERATURE INDICATION
PEQP208	PUMP P-208 STATUS & CONTOL	MFG CABLE	PUMP MOTOR	PST EQ PUMP CONTROL PEQPCP2 (CP-201)	PUMP SEAL FAILURE INDICATION PUMP OVER TEMPERATURE INDICATION
PEQP209	PUMP P-209 STATUS & CONTOL	MFG CABLE	PUMP MOTOR	PST EQ PUMP CONTROL PEQPCP2 (CP-201)	PUMP SEAL FAILURE INDICATION PUMP OVER TEMPERATURE INDICATION
PEQP210	PUMP P-210 STATUS & CONTOL	MFG CABLE	PUMP MOTOR	PST EQ PUMP CONTROL PEQPCP2 (CP-201)	PUMP SEAL FAILURE INDICATION PUMP OVER TEMPERATURE INDICATION
PEQS2	POST EQ STATUS	2#14, #14 GND, 1 1/4 "C 2#14 2#14 2#14 2#14 2#14 2#14 2#14 2#14 2#14 2#14 2#14 2#14 2#14 2#14 2#14 2#14 2#14 2#14 2#14 2#14 2#14 2#14 2#14 2#14 2#14 2#14 2#14 2#14 2#14 2#14 2#14 2#14 2#14 2#14 40 #14, #14G	POST EQ PUMP CONTROL PANEL PEQPCP2 (CP-201)	SCADA RTU 5 (LOCATED IN SLUDGE DEWATERING BLDG 2)	PUMP 206 RUN INDICATION PUMP 206 SEAL FAILURE PUMP 206 OVER TEMPERATURE INDICATION PUMP 206 OVERLOAD INDICATION PUMP 206 VFD FAULT INDICATION PUMP 206 H-O-A NOT IN AUTO PUMP 207 RUN INDICATION PUMP 207 SEAL FAILURE PUMP 207 OVER TEMPERATURE INDICATION PUMP 207 OVERLOAD INDICATION PUMP 207 VFD FAULT INDICATION PUMP 207 H-O-A NOT IN AUTO PUMP 208 RUN INDICATION PUMP 208 SEAL FAILURE PUMP 208 OVER TEMPERATURE INDICATION PUMP 208 OVERLOAD INDICATION PUMP 208 VFD FAULT INDICATION PUMP 208 H-O-A NOT IN AUTO PUMP 209 RUN INDICATION PUMP 209 SEAL FAILURE PUMP 209 OVER TEMPERATURE INDICATION PUMP 209 OVERLOAD INDICATION PUMP 209 VFD FAULT INDICATION PUMP 209 H-O-A NOT IN AUTO PUMP 210 RUN INDICATION PUMP 210 SEAL FAILURE PUMP 210 OVER TEMPERATURE INDICATION PUMP 210 OVERLOAD INDICATION PUMP 210 VFD FAULT INDICATION PUMP 210 H-O-A NOT IN AUTO POST EQ HIGH LEVEL ALARM POST EQ LOW LEVEL ALARM SPARES
		1"C, #18 TSP #18 TSP #18 TSP #18 TSP #18 TSP #18 TSP 3 #18 TSP			4-20mA, PUMP 206 SPEED INDICATION 4-20mA, PUMP 207 SPEED INDICATION 4-20mA, PUMP 208 SPEED INDICATION 4-20mA, PUMP 209 SPEED INDICATION 4-20mA, PUMP 210 SPEED INDICATION SPARES
MXL2	MIXER LEVEL	MFG CABLE	LEVEL SENSING PROBE (LS-207)	MXCP2	4-20mA, POST EQ LEVEL INDICATION
MXS2	MIXER STATUS	#14, #14 GND, 1"C 2#14 2#14 2#14 2#14 2#14 2#14 2#14 2#14 16 #14	MIXER CONTROL PANEL MXCP2 (CP-202)	SCADA RTU 5 (LOCATED IN SLUDGE DEWATERING BLDG 2)	MIXER M-206 RUN STATUS MIXER M-206 ALARM STATUS MIXER M-207 RUN STATUS MIXER M-207 ALARM STATUS MIXER M-208 RUN STATUS MIXER M-208 ALARM STATUS MIXER M-209 RUN STATUS MIXER M-209 ALARM STATUS SPARES
MX207	MIXER 207 STATUS	2#14, #14 GND, 1"C 2#14	MIXER	MXCP2	MIXER 207 SEAL FAILURE INDICATION MIXER 207 OVER TEMPERATURE INDICATION
MX208	MIXER 208 STATUS	2#14, #14 GND, 1"C 2#14	MIXER	MXCP2	MIXER 208 SEAL FAILURE INDICATION MIXER 208 OVER TEMPERATURE INDICATION
MX209	MIXER 209 STATUS	2#14, #14 GND, 1"C 2#14	MIXER	MXCP2	MIXER 209 SEAL FAILURE INDICATION MIXER 209 OVER TEMPERATURE INDICATION
MX210	MIXER 210 STATUS	2#14, #14 GND, 1"C 2#14	MIXER	MXCP2	MIXER 210 SEAL FAILURE INDICATION MIXER 210 OVER TEMPERATURE INDICATION
PEQL1	POST EQ LEVEL #1 (PT-203)	MFG CABLE 3/4"C, #18 TSP	PRESSURE TRANSDUCER LEVEL TRANSMITTER	LEVEL TRANSMITTER POST EQ PUMP CONTROL PANEL PEQPCP2 (CP-201)	4-20mA, FLOW SIGNAL
PEQL2	POST EQ LEVEL #2 (LS-203)	MFG CABLE 3/4"C, #18 TSP	FLOAT SWITCHES JUNCTION BOX	JUNCTION BOX, POST EQ PUMP CONTROL PANEL PEQPCP2 (CP-201)	4-20mA, POST EQ LEVEL INDICATION

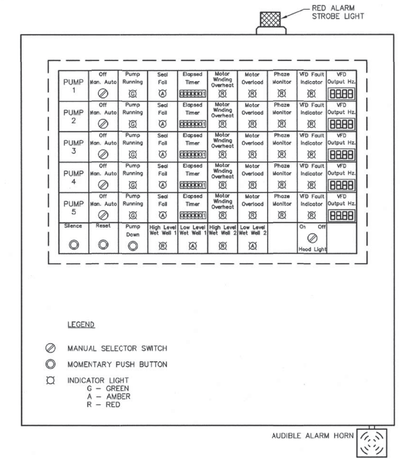

POST EQUALIZATION PUMP CONTROL PANEL

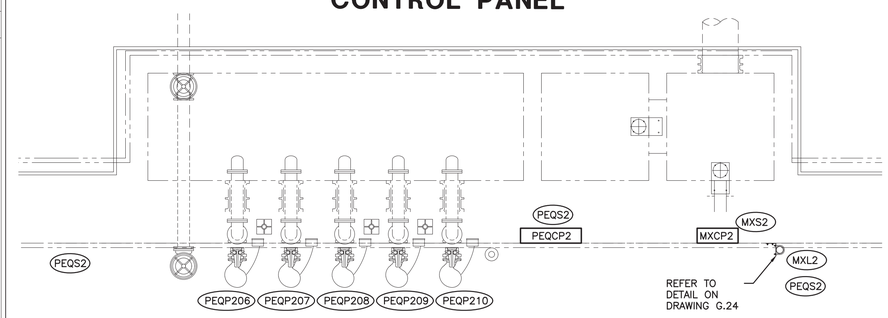

POST EQUALIZATION TRANSFER PUMP INSTRUMENTATION & CONTROL

SCALE: 1/4" = 1'-0"

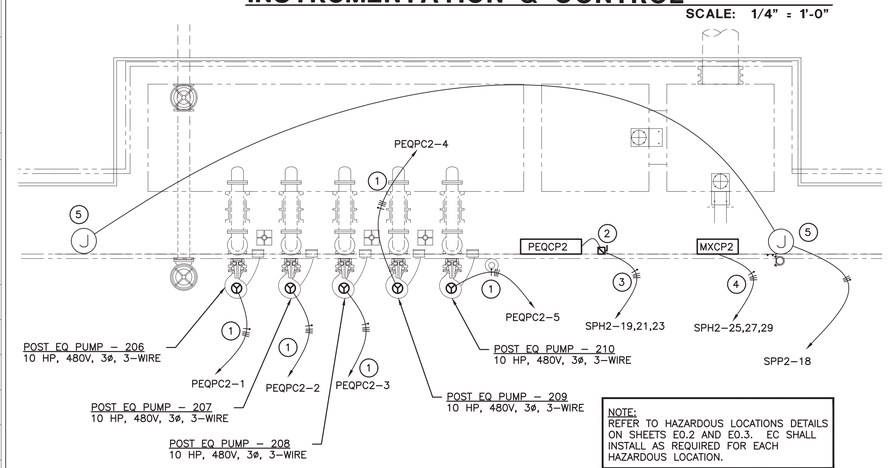

NOTE:
REFER TO HAZARDOUS LOCATIONS DETAILS ON SHEETS E0.2 AND E0.3. EC SHALL INSTALL AS REQUIRED FOR EACH HAZARDOUS LOCATION.

NOTES:

1. 3 #10, #10 GND, ¾"C. PROVIDE SEAL-OFF FITTINGS AS REQUIRED.
2. 600/100/3/4XSS, FUSED FOR EQUIPMENT.
3. 3 #1, #6 GND, 1½"C. PROVIDE SEAL-OFF FITTINGS AS REQUIRED.
4. 3 #3, #8 GND, 1½"C.
5. VERIFY POST EQ LELEVL SENSOR LOCATION. CONNECT COMPLETE.

POST EQUALIZATION TRANSFER PUMP SBR PLAN - ELECTRICAL

SCALE: 1/4" = 1'-0"

071118DR172000

BRITTAIN ENGINEERING, INC.
CONSULTING MECHANICAL AND ELECTRICAL ENGINEERS
PO BOX 939 HICKORY, NC 28603
TEL. (828) 328-1913 FAX (828) 328-1814

FINAL DRAWINGS - NOT RELEASED FOR CONSTRUCTION

WK DICKSON
community infrastructure consultants
616 COLONNADE DRIVE
CHARLOTTE, NC 28205
(t)704-334-5348
(f)704-334-0078
WWW.WKDICKSON.COM
NC LICENSE NO.F-0374

NORTH CAROLINA PROFESSIONAL SEAL 7883 ENGINEER DONALD BRITTAIN 10/23/18

PROFESSIONAL SEAL

REVISION RECORD

NO.	DATE	DESCRIPTION	BY
A	10/9/18	ISSUE FOR OWNER/NCDEQ REVIEW	CRF

PROJECT NAME: KILLIAN CREEK WWTP PHASE 3 UPGRADE

DRAWING TITLE: POST EQUALIZATION TRANSFER PUMP SBR ELECTRICAL

PROJ. MGR.:	CRF
DESIGN BY:	
DRAWN BY:	
PROJ. DATE:	SEPT. 2018
DRAWING NUMBER:	E2.4
WKD PROJ. NO.:	20170294.00.CL

COPYRIGHT © 2018 DICKSON & CO., INC. ALL RIGHTS RESERVED. REPRODUCTION OR USE OF THIS CONTENT OR THE DOCUMENT, IN WHOLE OR IN PART, WITHOUT WRITTEN PERMISSION OF DICKSON & CO., INC. IS PROHIBITED. ADDITIONS OR CHANGES TO THIS DOCUMENT WITHOUT PRIOR PRINT PRODUCTION OF THE DOCUMENT MARKED WITH AN ORIGINAL SIGNATURE AND SEAL SHALL BE CONSIDERED TO BE NULL AND VOID.

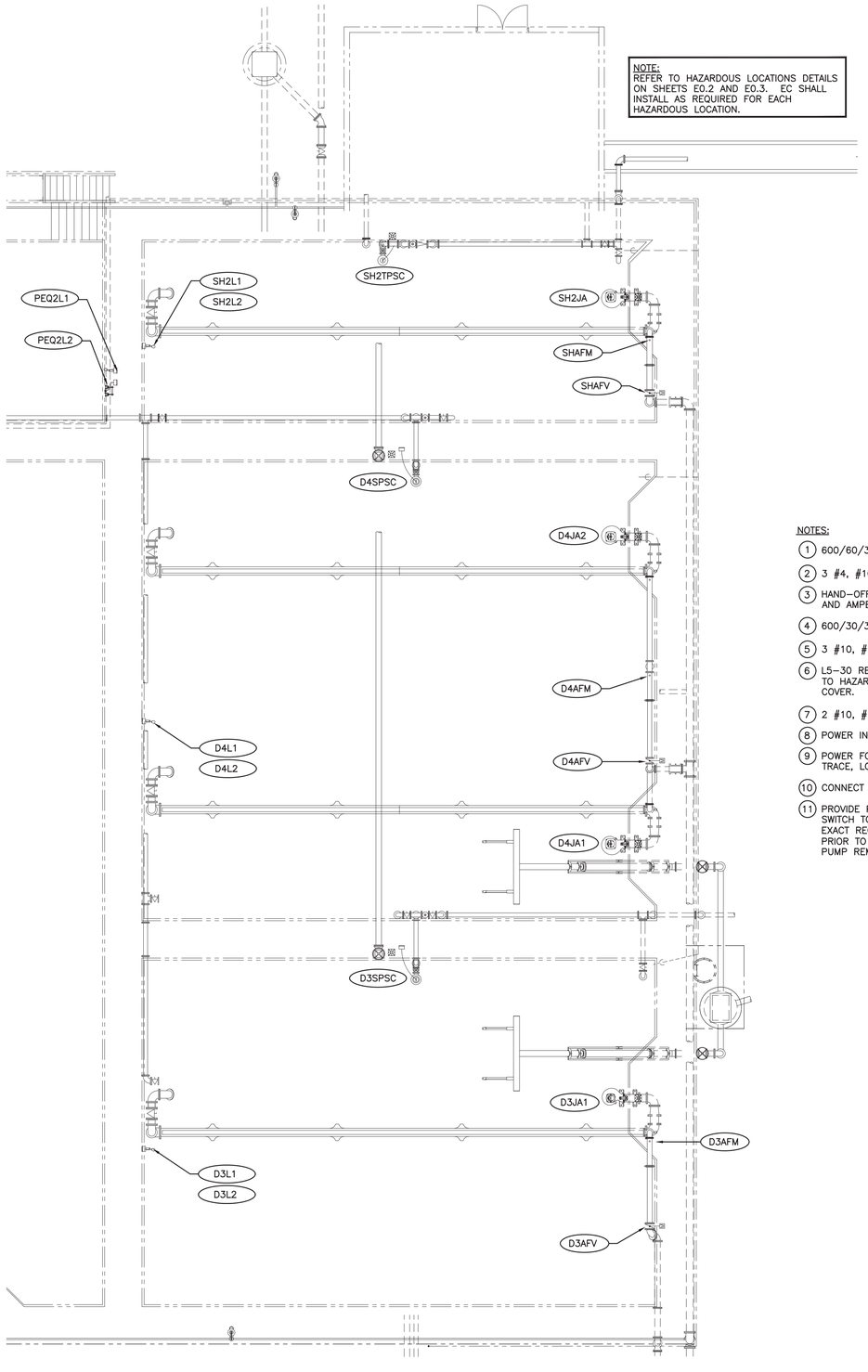

NOTES:

1. 600/60/3/4XSS, NON–FUSED DISCONNECT.
2. 3 #4, #10 GND, 1½"C. PROVIDE SEAL–OFF FITTINGS AS REQUIRED.
3. HAND–OFF REMOTE SWITCH SHALL BE NEMA 4XSS ENCLOSURE. VOLTAGE AND AMPERAGE RATING PER CIRCUIT REQUIREMENTS.
4. 600/30/3/4XSS, NON–FUSED DISCONNECT.
5. 3 #10, #10 GND, ¾"C. PROVIDE SEAL–OFF FITTINGS AS REQUIRED.
6. L5–30 RECEPTACLE MOUNTED 24" ABOVE EDGE OF CONTAINMENT. REFER TO HAZARDOUS AREAS DETAILS. PROVIDE HEAVY DUTY WHILE–IN–USE COVER.
7. 2 #10, #10 GND, ¾"C.
8. POWER INSTRUMENTATION AS REQUIRED.
9. POWER FOR HEAT TRACE. PROVIDE AS REQUIRED. VERIFY QUANTITY OF TRACE, LOAD AND LOCATION. INSTALL COMPLETE.
10. CONNECT 8" BV/MOTOR COMPLETE. VERIFY EXACT LOCATION.
11. PROVIDE PARALLEL CIRCUIT FROM H–O–R SWITCH TO SECOND H–O–R SWITCH TO BE LOCATED IN NEW SLUDGE DEWATERING BLDG. VERIFY EXACT REQUIREMENTS AND LOCATION FOR SECOND SWITCH W/ OWNER PRIOR TO ROUGH–IN. INTENT IS TO OPERATE SLUDGE HOLDING TRANSFER PUMP REMOTELY FROM SLUDGE DEWATERING BLDG WHEN NEEDED.

ENLARGED SBR DIGESTER PLAN INSTRUMENTATION & CONTROL

SCALE: 1/8" = 1'-0"

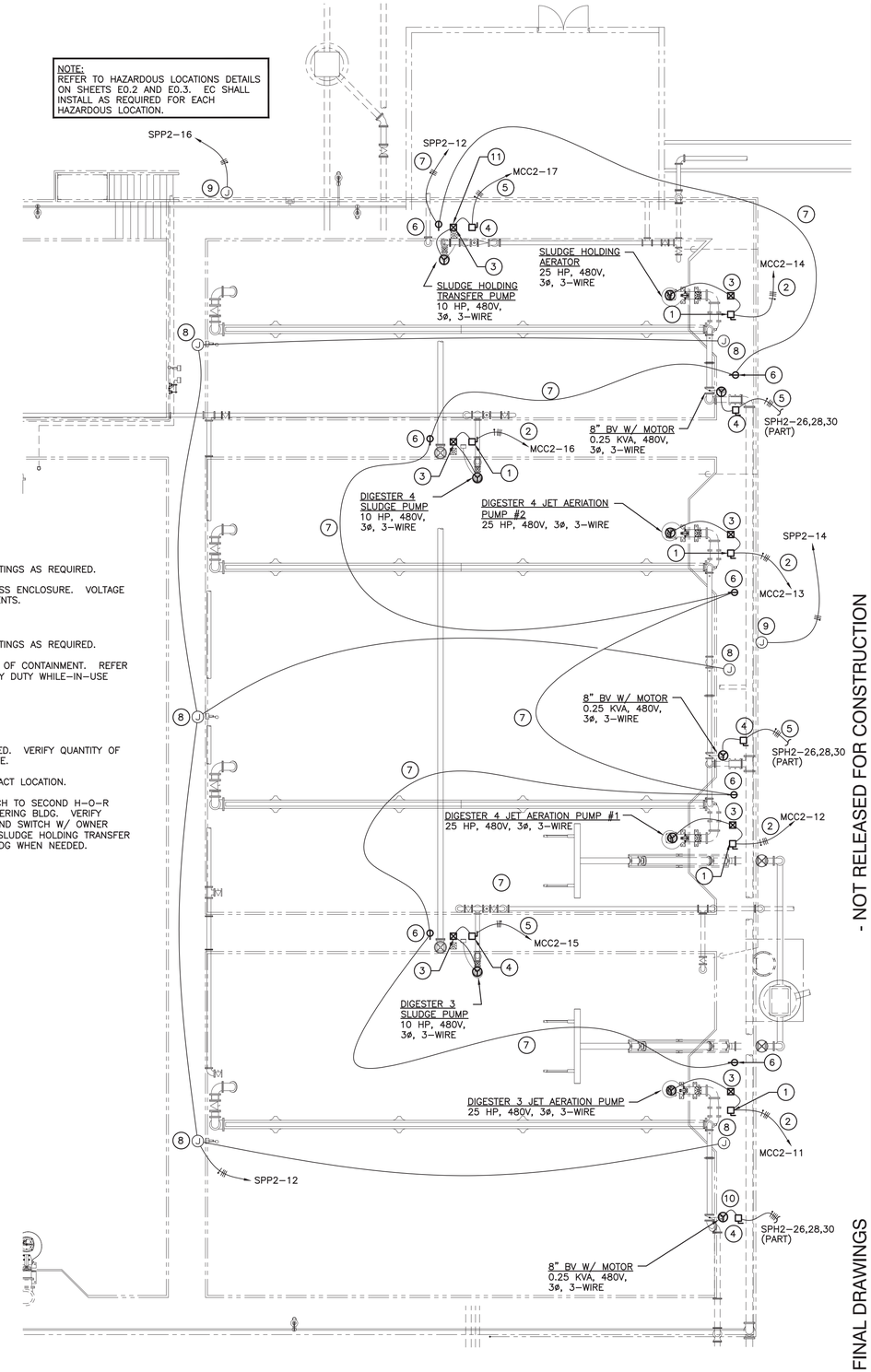

ENLARGED SBR DIGESTER PLAN - ELECTRICAL

SCALE: 1/8" = 1'-0"

071118DR172000

BRITTAIN ENGINEERING, INC.
CONSULTING MECHANICAL AND ELECTRICAL ENGINEERS
PO BOX 939 HICKORY, NC 28603
TEL. (828) 328-1813 FAX. (828) 328-1814

FINAL DRAWINGS - NOT RELEASED FOR CONSTRUCTION

WK DICKSON
community infrastructure consultants
616 COLONNADE DRIVE
CHARLOTTE, NC 28205
(t)704-334-5348
(f)704-334-0078
WWW.WKDICKSON.COM
NC LICENSE NO.F-0374

NORTH CAROLINA PROFESSIONAL SEAL 7883 ENGINEER DANIEL P. BRITTAIN 10/23/18

PROFESSIONAL SEAL

REVISION RECORD

NO.	DATE	DESCRIPTION	BY
A	10/9/18	ISSUE FOR OWNER/NCDEQ REVIEW	CRF

PROJECT NAME: KILLIAN CREEK WWTP PHASE 3 UPGRADE

DRAWING TITLE: SBR DIGESTER ELECTRICAL

PROJ. MGR.:	CRF
DESIGN BY:	
DRAWN BY:	
PROJ. DATE:	SEPT. 2018
DRAWING NUMBER:	E2.5
WKD PROJ. NO.:	20170294.00.CL

COPYRIGHT © 2010 DICKSON-CR, INC. ALL RIGHTS RESERVED. REPRODUCTION OR USE OF THIS CONTENT OR THE DOCUMENT, IN WHOLE OR IN PART, WITHOUT WRITTEN PERMISSION OF DICKSON IS PROHIBITED. ALL OTHER RIGHTS, INCLUDING PATENT RIGHTS, ARE RESERVED. PRINT THE ORIGINAL OF THIS DOCUMENT MARKED WITH AN ORIGINAL SIGNATURE AND SEAL SHALL BE CONSIDERED TO BE VALID. RAE COPIES

SBR DIGESTER CONTROL & INSTRUMENTATION SCHEDULE

TAG	DESCRIPTION	WIRING	CONNECT FROM	CONNECT TO	NOTES
D3L1	DIGESTER #3 LEVEL	MFG CABLE 3/4"C, #18 TSP	PRESSURE TRANSDUCER LEVEL TRANSMITTER	LEVEL TRANSMITTER SBR CONTROL PANEL (SBRCP2)	4–20mA
D3L2	DIGESTER #3 LEVEL	MFG CABLE 3/4"C, #18 TSP	FLOAT SWITCHES JUNCTION BOX	JUNCTION BOX SBR CONTROL PANEL (SBRCP2)	4–20mA
D3JA1	DIGESTER #3 JET AERATION PUMP JP–205 CONTROL & STATUS	MFG CABLE 2#14, #12GND, 3/4"C 2#14 4#14 4#14	PUMP MOTOR H–O–R / JUNCTION BOX	THROUGH DISCONNECT TO ADJACENT H–O–R JUNCTION BOX SBR CONTROL PANEL (SBRCP2)	H–O–R = HAND–OFF–REMOTE SELECTOR SEAL FAILURE OVER TEMPERATURE H–O–R CONTROL CIRCUITRY SPARES
D3SPSC	DIGESTER #3 SLUDGE PUMP P–203 CONTROL & STATUS	MFG CABLE 2#14, #12GND, 3/4"C 2#14 4#14 4#14	PUMP MOTOR H–O–R / JUNCTION BOX	THROUGH DISCONNECT TO ADJACENT H–O–R JUNCTION BOX SBR CONTROL PANEL (SBRCP2)	H–O–R = HAND–OFF–REMOTE SELECTOR SEAL FAILURE OVER TEMPERATURE H–O–R CONTROL CIRCUITRY SPARES
D4L1	DIGESTER #4 LEVEL	MFG CABLE 3/4"C, #18 TSP	PRESSURE TRANSDUCER LEVEL TRANSMITTER	LEVEL TRANSMITTER SBC CONTROL PANEL (SBRCP2)	4–20mA
D4L2	DIGESTER #4 LEVEL	MFG CABLE 3/4"C, #18 TSP	FLOAT SWITCHES JUNCTION BOX	JUNCTION BOX SBR CONTROL PANEL (SBRCP2)	4–20mA
D4JA1	DIGESTER #4 JET AERATION PUMP JP–206 CONTROL & STATUS	MFG CABLE 2#14, #12GND, 3/4"C 2#14 4#14 4#14	PUMP MOTOR H–O–R / JUNCTION BOX	THROUGH DISCONNECT TO ADJACENT H–O–R JUNCTION BOX SBR CONTROL PANEL (SBRCP2)	H–O–R = HAND–OFF–REMOTE SELECTOR SEAL FAILURE OVER TEMPERATURE H–O–R CONTROL CIRCUITRY SPARES
D4JA2	DIGESTER #4 JET AERATION PUMP JP–207 CONTROL & STATUS	MFG CABLE 2#14, #12GND, 3/4"C 2#14 4#14 4#14	PUMP MOTOR H–O–R / JUNCTION BOX	THROUGH DISCONNECT TO ADJACENT H–O–R JUNCTION BOX SBR CONTROL PANEL (SBRCP2)	H–O–R = HAND–OFF–REMOTE SELECTOR SEAL FAILURE OVER TEMPERATURE H–O–R CONTROL CIRCUITRY SPARES
D4SPSC	DIGESTER #4 SLUDGE PUMP P–204 CONTROL & STATUS	MFG CABLE 2#14, #12GND, 3/4"C 2#14 4#14 4#14	PUMP MOTOR H–O–R / JUNCTION BOX	THROUGH DISCONNECT TO ADJACENT H–O–R JUNCTION BOX SBR CONTROL PANEL (SBRCP2)	H–O–R = HAND–OFF–REMOTE SELECTOR SEAL FAILURE OVER TEMPERATURE H–O–R CONTROL CIRCUITRY SPARES
SH2L1	SLUDGE HOLDING #2 LEVEL	MFG CABLE 3/4"C, #18 TSP	PRESSURE TRANSDUCER LEVEL TRANSMITTER	LEVEL TRANSMITTER POST EQ PUMP CONTROL PANEL (PEQPCP2)	4–20mA, FLOW SIGNAL
SH2L2	SLUDGE HOLDING #2 LEVEL	MFG CABLE 3/4"C, #18 TSP	PRESSURE TRANSDUCER LEVEL TRANSMITTER	LEVEL TRANSMITTER POST EQ PUMP CONTROL PANEL (PEQPCP2)	4–20mA, FLOW SIGNAL
SH2JA	SLUDGE HOLDING #2 JET AERATION PUMP JP–208 CONTROL & STATUS	MFG CABLE 2#14, #12GND, 3/4"C 2#14 4#14 4#14	MIXER MOTOR H–O–R / JUNCTION BOX	THROUGH DISCONNECT TO ADJACENT H–O–R JUNCTION BOX SBR CONTROL PANEL (SBRCP2)	SEAL FAILURE & OVER TEMPERATURE SEAL FAILURE OVER TEMPERATURE H–O–R CONTROL CIRCUITRY SPARES
SH2TPSC	SLUDGE HOLDING #2 TRANSFER PUMP P–205 CONTROL & STATUS	MFG CABLE 2#14, #12GND, 3/4"C 2#14 4#14 4#14	PUMP MOTOR H–O–R / JUNCTION BOX	THROUGH DISCONNECT TO ADJACENT H–O–R JUNCTION BOX SBR CONTROL PANEL (SBRCP2)	H–O–R = HAND–OFF–REMOTE SELECTOR SEAL FAILURE OVER TEMPERATURE H–O–R CONTROL CIRCUITRY SPARES
D3AFM	DIGESTER #3 AIR FLOW METER	MFG CABLE 3/4"C, #18 TSP	FIT–203 FLOW SENSOR/ TEMPERATURE SENSOR	SBR CONTROL PANEL (SBRCP2)	4–20mA
D4AFM	DIGESTER #4 AIR FLOW METER	MFG CABLE 3/4"C, #18 TSP	FIT–204 FLOW SENSOR/ TEMPERATURE SENSOR	SBR CONTROL PANEL (SBRCP2)	4–20mA
SHAFM	SLUDGE HOLDING #4 AIR FLOW METER	MFG CABLE 3/4"C, #18 TSP	FIT–205 FLOW SENSOR/ TEMPERATURE SENSOR	SBR CONTROL PANEL (SBRCP2)	4–20mA
D3AFV	DIGESTER #3 AIR FLOW VALVE	3#14, #14GND, 3/4"C 4#14 4#14	SBR CONTROL PANEL (SBRCP2) VALVE ACTUATOR	VALVE ACTUATOR SBR CONTROL PANEL (SBRCP2)	4–20mA
		3/4"C, #18 TSP #18 TSP			4–20mA POSITION COMMAND 4–20mA POSITION FEEDBACK
D4AFV	DIGESTER #4 AIR FLOW VALVE	3#14, #14GND, 3/4"C 4#14 4#14	SBR CONTROL PANEL (SBRCP2) VALVE ACTUATOR	VALVE ACTUATOR SBR CONTROL PANEL (SBRCP2)	4–20mA
		3/4"C, #18 TSP #18 TSP			4–20mA POSITION COMMAND 4–20mA POSITION FEEDBACK
SHAFV	SLUDGE HOLDING #2 AIR FLOW VALVE	3#14, #14GND, 3/4"C 4#14 4#14	SBR CONTROL PANEL (SBRCP2) VALVE ACTUATOR	VALVE ACTUATOR SBR CONTROL PANEL (SBRCP2)	4–20mA
		3/4"C, #18 TSP #18 TSP			4–20mA POSITION COMMAND 4–20mA POSITION FEEDBACK
AP1AFV	AIR PIPING AIR FLOW VALVE	3#14, #14GND, 3/4"C 4#14 4#14	SBR CONTROL PANEL (SBRCP2) VALVE ACTUATOR	VALVE ACTUATOR SBR CONTROL PANEL (SBRCP2)	4–20mA
		3/4"C, #18 TSP #18 TSP			4–20mA POSITION COMMAND 4–20mA POSITION FEEDBACK
AP2AFV	AIR PIPING AIR FLOW VALVE	3#14, #14GND, 3/4"C 4#14 4#14	SBR CONTROL PANEL (SBRCP2) VALVE ACTUATOR	VALVE ACTUATOR SBR CONTROL PANEL (SBRCP2)	4–20mA
		3/4"C, #18 TSP #18 TSP			4–20mA POSITION COMMAND 4–20mA POSITION FEEDBACK
AP1AFM	AIR PIPING AIR FLOW METER	MFG CABLE 3/4"C, #18 TSP	FIT–4 FLOW SENSOR	SBR CONTROL PANEL (SBRCP2)	4–20mA
AP2AFM	AIR PIPING AIR FLOW METER	MFG CABLE 3/4"C, #18 TSP	FIT–5 FLOW SENSOR	SBR CONTROL PANEL (SBRCP2)	4–20mA

FINAL DRAWINGS - NOT RELEASED FOR CONSTRUCTION

050818DR172000

BRITTAIN ENGINEERING, INC.
CONSULTING MECHANICAL AND ELECTRICAL ENGINEERS
PO BOX 939 HICKORY, NC 28603
TEL. (828) 328-1813 FAX. (828) 328-1814

WK DICKSON
community infrastructure consultants
616 COLONNADE DRIVE
CHARLOTTE, NC 28205
(t)704-334-5348
(f)704-334-0078
WWW.WKDICKSON.COM
NC LICENSE NO.F-0374

NORTH CAROLINA PROFESSIONAL SEAL 7883 ENGINEER DANIEL DEWITT TRAIN 10/23/18

PROFESSIONAL SEAL

REVISION RECORD

NO.	DATE	DESCRIPTION	BY
A	10/9/18	ISSUE FOR OWNER/NCDEQ REVIEW	CRF

PROJECT NAME: KILLIAN CREEK WWTP PHASE 3 UPGRADE

DRAWING TITLE: SBR DIGESTER CONTROL AND INSTRUMENTATION

PROJ. MGR.:	CRF
DESIGN BY:	
DRAWN BY:	
PROJ. DATE:	SEPT. 2018
DRAWING NUMBER:	E2.6
WKD PROJ. NO.:	20170294.00.CL

COPYRIGHT © WK DICKSON & CO., INC. ALL RIGHTS RESERVED. REPRODUCTION OR USE OF THE CONTENTS OF THIS DOCUMENT, ADDITIONS OR DELETIONS TO THIS DOCUMENT, IN WHOLE OR IN PART, WITHOUT WRITTEN CONSENT OF WK DICKSON & CO., INC., IS PROHIBITED. ONLY COPIES FROM THE ORIGINAL OF THIS DOCUMENT, MARKED WITH AN ORIGINAL SIGNATURE AND SEAL SHALL BE CONSIDERED TO BE VALID. FACE COPIES.

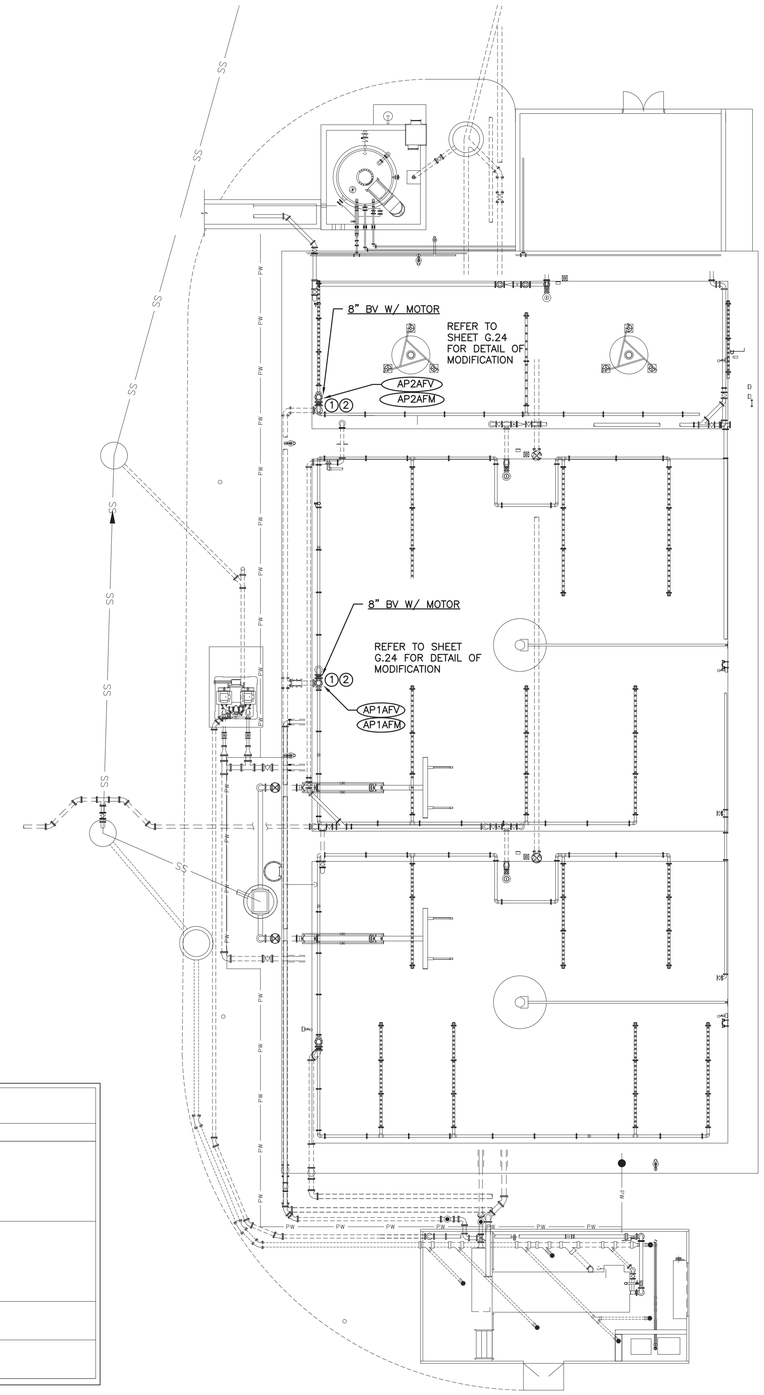

NOTES:

1. VERIFY AIR FLOW METER REQUIREMENTS. CONNECT TO NEAREST SAME RATED POWER POWER SOURCE. PROVIDE DISCONNECT STAINLESS STEEL NEMA 4X MEANS AS REQUIRED. REFER TO HAZARDOUS LOCATION DETAILS. INSTALL AS REQUIRED FOR LOCATION. PROVIDE SEAL OFF FITTINGS AS REQUIRED.
2. VERIFY ACTUATED BALL VALVE REQUIREMENTS. CONNECT TO NEAREST SAME RATED POWER POWER SOURCE. PROVIDE DISCONNECT STAINLESS STEEL NEMA 4X MEANS AS REQUIRED. REFER TO HAZARDOUS LOCATION DETAILS. INSTALL AS REQUIRED FOR LOCATION. PROVIDE SEAL OFF FITTINGS AS REQUIRED.

EXISTING SBR DIGESTER CONTROL & INSTRUMENTATION SCHEDULE

TAG	DESCRIPTION	WIRING	CONNECT FROM	CONNECT TO	NOTES
AP1AFV	AIR PIPING AIR FLOW VALVE	3#14, #14GND, 3/4"C 4#14 4#14 3/4"C, #18 TSP #18 TSP	SBR CONTROL PANEL (SBRCP1) VALVE ACTUATOR	VALVE ACTUATOR SBR CONTROL PANEL (SBRCP1)	4–20mA 4–20mA POSITION COMMAND 4–20mA POSITION FEEDBACK
AP2AFV	AIR PIPING AIR FLOW VALVE	3#14, #14GND, 3/4"C 4#14 4#14 3/4"C, #18 TSP #18 TSP	SBR CONTROL PANEL (SBRCP1) VALVE ACTUATOR	VALVE ACTUATOR SBR CONTROL PANEL (SBRCP1)	4–20mA 4–20mA POSITION COMMAND 4–20mA POSITION FEEDBACK
AP1AFM	AIR PIPING AIR FLOW METER	MFG CABLE 3/4"C, #18 TSP	FIT–4 FLOW SENSOR	SBR CONTROL PANEL (SBRCP1)	4–20mA
AP2AFM	AIR PIPING AIR FLOW METER	MFG CABLE 3/4"C, #18 TSP	FIT–5 FLOW SENSOR	SBR CONTROL PANEL (SBRCP1)	4–20mA

EXISTING SBR DIGESTER PLAN - ELECTRICAL

SCALE: 3/32" = 1'-0"

100218DR172000

BRITTAIN ENGINEERING, INC.
CONSULTING MECHANICAL AND ELECTRICAL ENGINEERS
PO BOX 939 HICKORY, NC 28603
TEL (828) 328-1813 FAX (828) 328-1814

FINAL DRAWINGS - NOT RELEASED FOR CONSTRUCTION

WK DICKSON
community infrastructure consultants
616 COLONNADE DRIVE
CHARLOTTE, NC 28205
(t)704-334-5348
(f)704-334-0078
WWW.WKDICKSON.COM
NC LICENSE NO.F-0374

NORTH CAROLINA PROFESSIONAL SEAL 7883 ENGINEER DONALD PERRITTAIN 09/23/19

PROFESSIONAL SEAL

REVISION RECORD

NO.	DATE	DESCRIPTION	BY
A	10/9/18	ISSUE FOR OWNER/NCDEQ REVIEW	CRF

PROJECT NAME: KILLIAN CREEK WWTP PHASE 3 UPGRADE

DRAWING TITLE: SBR DIGESTER ELECTRICAL

PROJ. MGR.:	CRF
DESIGN BY:	
DRAWN BY:	
PROJ. DATE:	SEPT. 2018
DRAWING NUMBER:	E2.7
WKD PROJ. NO.:	20170294.00.CL

COPYRIGHT © 2018 DICKSON & CO., INC. ALL RIGHTS RESERVED. REPRODUCTION OR USE OF THIS CONTENT OR THE DOCUMENT, IN WHOLE OR IN PART, WITHOUT WRITTEN PERMISSION OF DICKSON & CO., INC. IS PROHIBITED. ADDITIONS OR CHANGES TO THIS DOCUMENT AFTER IT HAS BEEN ISSUED BY DICKSON & CO., INC. ARE PROHIBITED. ONLY PRINTS FROM THE ORIGINAL OF THIS DOCUMENT MARKED WITH AN ORIGINAL SIGNATURE AND SEAL SHALL BE CONSIDERED TO BE VALID. FACE COPIES

SBR FLOW SPLITTER CONTROL & INSTRUMENTATION SCHEDULE

TAG	DESCRIPTION	WIRING	CONNECT FROM	CONNECT TO	NOTES
CTL	CHEMICAL TANK LEVEL	3/4"C, 2#18 TSP	ULTRASONIC LEVEL SENSOR LIT–700	CHEMICAL ROOM C & I TERMINAL BOX	4–20mA – LEVEL INDICATION
		4#14, #14GND, 3/4"C	HIGH LEVEL ALARM SENSOR LAH–700		HIGH LEVEL ALARM
SGA1	SLUICE GATE MSGA–201 ACTUATOR	5#14, #14 GND, 1"C 3#14 8#14 4#14	SBR CONTROL PANEL SBRCP2 (CP–200)	SLUICE GATE ACTUATOR	OPEN/CLOSE/STOP COMMANDS POSITION INDICATION ACTUATOR STATUS SPARES
		3/4"C, #18 TSP #18 TSP			4–20mA POSITION COMMAND 4–20mA POSITION FEEDBACK
SGA2	SLUICE GATE MSGA–202 ACTUATOR	5#14, #14 GND, 1"C 3#14 8#14 4#14	SBR CONTROL PANEL SBRCP2 (CP–200)	SLUICE GATE ACTUATOR	OPEN/CLOSE/STOP COMMANDS POSITION INDICATION ACTUATOR STATUS SPARES
		3/4"C, #18 TSP #18 TSP			4–20mA POSITION COMMAND 4–20mA POSITION FEEDBACK
SGA3	SLUICE GATE MSGA–203 ACTUATOR	5#14, #14 GND, 1"C 3#14 8#14 4#14	SBR CONTROL PANEL SBRCP2 (CP–200)	SLUICE GATE ACTUATOR	OPEN/CLOSE/STOP COMMANDS POSITION INDICATION ACTUATOR STATUS SPARES
		3/4"C, #18 TSP #18 TSP			4–20mA POSITION COMMAND 4–20mA POSITION FEEDBACK
SGA4	SLUICE GATE MSGA–204 ACTUATOR	5#14, #14 GND, 1"C 3#14 8#14 4#14	SBR CONTROL PANEL SBRCP2 (CP–200)	SLUICE GATE ACTUATOR	OPEN/CLOSE/STOP COMMANDS POSITION INDICATION ACTUATOR STATUS SPARES
		3/4"C, #18 TSP #18 TSP			4–20mA POSITION COMMAND 4–20mA POSITION FEEDBACK
INFS	INFLOW REFRIGERATED SAMPLER	MFG CABLE 3/4"C, #18 TSP #18 TSP	INFLOW REFRIGERATED SAMPLER	CHEMICAL ROOM C & I TERMINAL BOX TO RTU #1 IN EXIST BLOWER	4–20mA 4–20mA

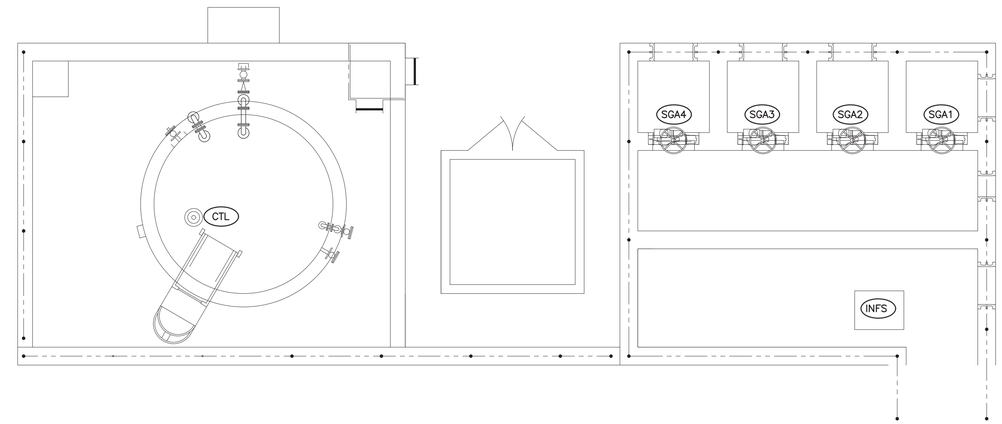

SBR FLOW SPLITTER INSTRUMENTATION & CONTROL

SCALE: 1/4" = 1'-0"

NOTES:
- REFER TO HAZARDOUS LOCATION REQUIREMENTS FOR ALL CONNECTIONS.
- PLANT SHALL REMAIN IN FULL OPERATION AT ALL TIMES. EC SHALL COORD, PROVIDE TEMPORARY POWER OR ANY OTHER MEANS NECESSARY TO PROVIDE SLUICE GATE OPERATION TO EXIST AND/OR NEW GATE AS REQUIRED FOR PROPER PLANT OPERATIONS.

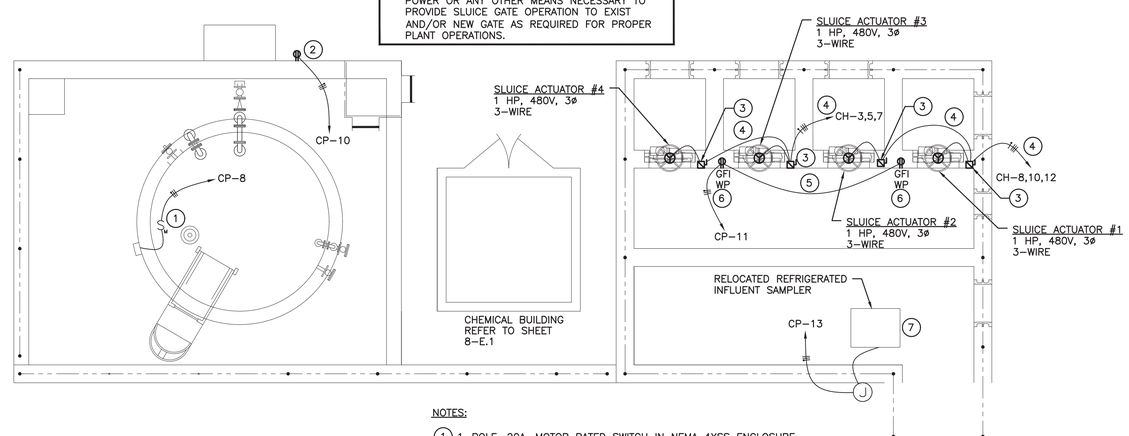

NOTES:

1. 1–POLE, 20A, MOTOR RATED SWITCH IN NEMA 4XSS ENCLOSURE, FOR CHEM TANK HEAT AND TEMP CONTROLLER. CONNECT COMPLETE.
2. PROVIDE HEAT TRACE AND POWER AS REQUIRED FOR (1) 3" FILL LINE.
3. 600/30/3, 4XSS, FUSE FOR EQUIPMENT.
4. 3 #10, #10 GND, ¾"C. PROVIDE SEAL–OFF FITTINGS AS REQUIRED.
5. 2 #12, #12 GND. PROVIDE SEAL–OFF FITTINGS AS REQUIRED.
6. MOUNT RECEPTACLE 24" ABOVE EDGE O CONTAINMENT. REFER TO HAZARDOUS AREA DETAILS. PROVIDE HEAVY DUTY WHILE–IN–USE COVER.
7. VERIFY AND CHANGE AS REQUIRED FOR COMPLETE OPERATION.

SBR FLOW SPLITTER PLAN - ELECTRICAL

SCALE: 1/4" = 1'-0"

071118DR172000

BRITTAIN ENGINEERING, INC.
CONSULTING MECHANICAL AND ELECTRICAL ENGINEERS
PO BOX 939 HICKORY, NC 28603
TEL. (828) 328-1813 FAX. (828) 328-1814

FINAL DRAWINGS - NOT RELEASED FOR CONSTRUCTION

WK DICKSON
community infrastructure consultants
616 COLONNADE DRIVE
CHARLOTTE, NC 28205
(t)704-334-5348
(f)704-334-0078
WWW.WKDICKSON.COM
NC LICENSE NO.F-0374

NORTH CAROLINA PROFESSIONAL SEAL 7883 ENGINEER DANIAL DISBERT TIMS 10/23/18

PROFESSIONAL SEAL

REVISION RECORD

NO.	DATE	DESCRIPTION	BY
A	10/9/18	ISSUE FOR OWNER/NCDEQ REVIEW	CRF

PROJECT NAME: KILLIAN CREEK WWTP PHASE 3 UPGRADE

DRAWING TITLE: SBR FLOW SPLITTER ELECTRICAL

PROJ. MGR.:	CRF
DESIGN BY:	
DRAWN BY:	
PROJ. DATE:	SEPT. 2018
DRAWING NUMBER:	E2.8
WKD PROJ. NO.:	20170294.00.CL

COPYRIGHT © 2018 DICKSON & ASS. ALL RIGHTS RESERVED. REPRODUCTION OR USE OF THIS CONTENT OR THE DOCUMENT, IN WHOLE OR IN PART, WITHOUT WRITTEN CONSENT OF DICKSON & ASS. IS PROHIBITED. ALTERATION OF THIS DOCUMENT IS PROHIBITED. PRINTS THE DRAWING OF THIS DOCUMENT MARKED WITH AN ORIGINAL SIGNATURE AND SEAL SHALL BE CONSIDERED TO BE VALID. PAPER COPIES

EXISTING BLOWER BLDG CONTROL & INSTRUMENTATION SCHEDULE

TAG	DESCRIPTION	WIRING	CONNECT FROM	CONNECT TO	NOTES
AFM1	AIR FLOW METER FIT1 STATUS	2 #14, #14 GND, 3/4"C #18 TSP	AIR FLOW METER	EXIST BLOWER I&C TERMINAL BOX TO EXIST SBR#1 CONTROL CAB IN MAIN BUILDING	MONITOR AIR FLOW SIGNAL CONNECT TO EXIST CIRCUITRY AS REQUIRED
AFM2	AIR FLOW METER FIT2 STATUS	2 #14, #14 GND, 3/4"C #18 TSP	AIR FLOW METER	EXIST BLOWER I&C TERMINAL BOX TO EXIST SBR#1 CONTROL CAB IN MAIN BUILDING	MONITOR AIR FLOW SIGNAL CONNECT TO EXIST CIRCUITRY AS REQUIRED
AFM3	AIR FLOW METER FIT3 STATUS	2 #14, #14 GND, 3/4"C #18 TSP	AIR FLOW METER	EXIST BLOWER I&C TERMINAL BOX TO EXIST SBR#1 CONTROL CAB IN MAIN BUILDING	MONITOR AIR FLOW SIGNAL CONNECT TO EXIST CIRCUITRY AS REQUIRED
MBV01	MAIN BLOWER VALVE (CHANGE TYPE)	3#14, #14 GND, 3/4"C 3#14 4#14 4#14	VALVE ACTUATOR	BLOWER BLDG I&C TERMINAL BOX	OPEN/CLOSE COMMANDS TO SBRCP1 POSITION INDICATOR TO SBRCP1 TORQUE SWITCHES SPARES
		#18 TSP #18 TSP		EXISTING SBR#1 CONTROL	MONITOR VALVE POSITION TO SBRCP1 SPARES
MBV02	MAIN BLOWER VALVE (CHANGE TYPE & LOCATION)	3#14, #14 GND, 3/4"C 3#14 4#14 4#14	VALVE ACTUATOR	BLOWER BLDG I&C TERMINAL BOX	OPEN/CLOSE COMMANDS TO SBRCP1 POSITION INDICATOR TO SBRCP1 TORQUE SWITCHES SPARES
		#18 TSP #18 TSP		EXISTING SBR#1 CONTROL	MONITOR VALVE POSITION TO SBRCP1 SPARES
MBV03	NEW MAIN BLOWER VALVE	3#14, #14 GND, 3/4"C 3#14 4#14 4#14	VALVE ACTUATOR	BLOWER BLDG I&C TERMINAL BOX	OPEN/CLOSE COMMANDS TO SBRCP1 POSITION INDICATOR TO SBRCP1 TORQUE SWITCHES SPARES
		#18 TSP #18 TSP		EXISTING SBR#1 CONTROL	MONITOR VALVE POSITION TO SBRCP1 SPARES

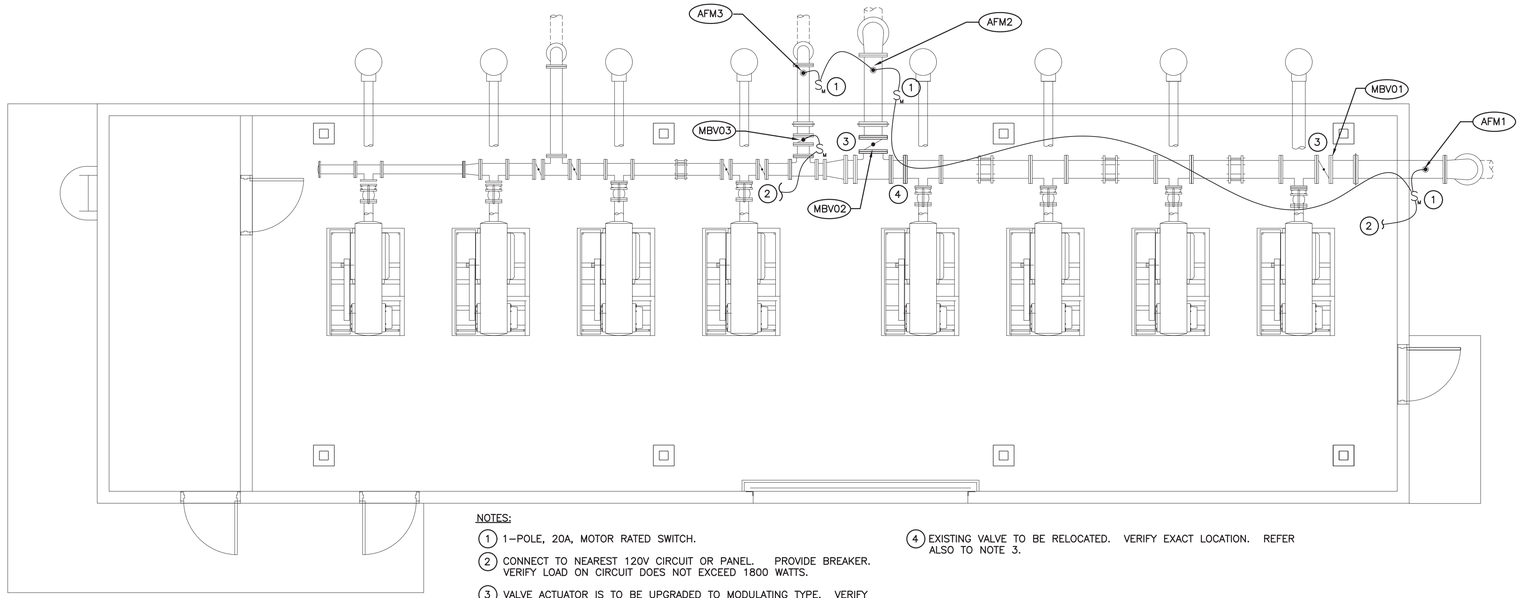

NOTES:

1. 1-POLE, 20A, MOTOR RATED SWITCH.
2. CONNECT TO NEAREST 120V CIRCUIT OR PANEL. PROVIDE BREAKER. VERIFY LOAD ON CIRCUIT DOES NOT EXCEED 1800 WATTS.
3. VALVE ACTUATOR IS TO BE UPGRADED TO MODULATING TYPE. VERIFY REQUIREMENTS FOR CONTOLS / MONITORING AND MAKE CHANGES AS REQUIRED. USE EXISTING CIRCUITRY WHERE POSSIBLE. POWER AS REQUIRED.
4. EXISTING VALVE TO BE RELOCATED. VERIFY EXACT LOCATION. REFER ALSO TO NOTE 3.

EXISTING BLOWER BLDG PLAN - POWER

SCALE: 1/4" = 1'-0"

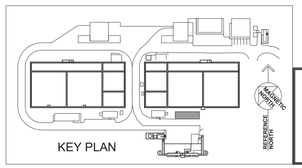

KEY PLAN

071118DR172000

BRITTAIN ENGINEERING, INC.
CONSULTING MECHANICAL AND ELECTRICAL ENGINEERS
PO BOX 939 HICKORY, NC 28603
TEL: (828) 328-1813 FAX: (828) 328-1814

FINAL DRAWINGS - NOT RELEASED FOR CONSTRUCTION

WK DICKSON
community infrastructure consultants
616 COLONNADE DRIVE
CHARLOTTE, NC 28205
(t)704-334-5348
(f)704-334-0078
WWW.WKDICKSON.COM
NC LICENSE NO.F-0374

NORTH CAROLINA PROFESSIONAL SEAL 7883 ENGINEER DANIAL DISBERT TATE 10/23/18

PROFESSIONAL SEAL

REVISION RECORD

NO.	DATE	DESCRIPTION	BY
A	10/9/18	ISSUE FOR OWNER/NCDEQ REVIEW	CRF

PROJECT NAME: KILLIAN CREEK WWTP PHASE 3 UPGRADE

DRAWING TITLE: EXISTING BLOWER BUILDING ELECTRICAL

PROJ. MGR.:	CRF
DESIGN BY:	
DRAWN BY:	
PROJ. DATE:	SEPT. 2018
DRAWING NUMBER:	3-E.1
WKD PROJ. NO.:	20170294.00.CL

COPYRIGHT © 2018 DICKSON & CO., INC. ALL RIGHTS RESERVED. REPRODUCTION OR USE OF THIS CONTENT OF THIS DOCUMENT, ADDITIONS OR CHANGES TO THIS DOCUMENT WITHOUT WRITTEN PERMISSION IS PROHIBITED. ONLY PRINTS BEARING THE ORIGINAL SIGNATURE AND SEAL SHALL BE CONSIDERED TO BE VALID. FACE COPIES PRINT THE OPINIONS OF THIS DOCUMENT MARKED WITH A NON-ORIGINAL SIGNATURE AND SEAL

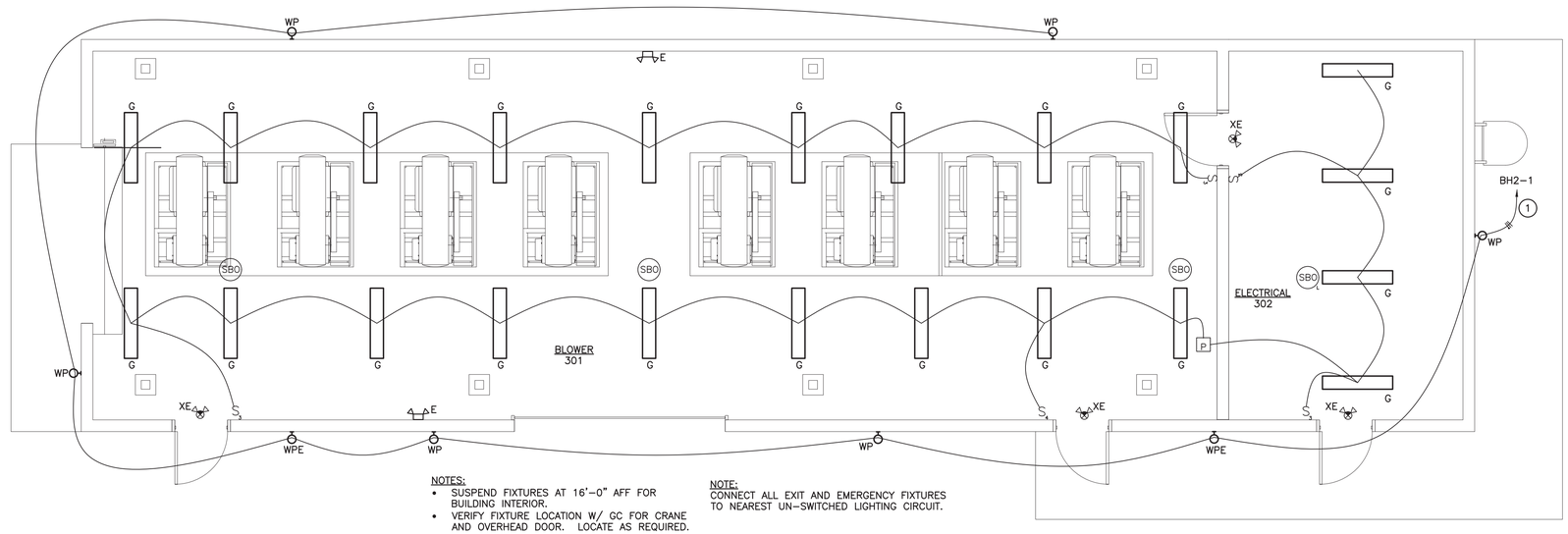

NOTES:
- SUSPEND FIXTURES AT 16'-0" AFF FOR BUILDING INTERIOR.
- VERIFY FIXTURE LOCATION W/ GC FOR CRANE AND OVERHEAD DOOR. LOCATE AS REQUIRED.

NOTE:
CONNECT ALL EXIT AND EMERGENCY FIXTURES TO NEAREST UN-SWITCHED LIGHTING CIRCUIT.

NOTES:
(1) PROVIDE LINE VOLTAGE PHOTOCELL. PLACE ON NORTH SIDE OF BUILDING.

BLOWER BLDG PLAN - LIGHTING

SCALE: 1/4" = 1'-0"

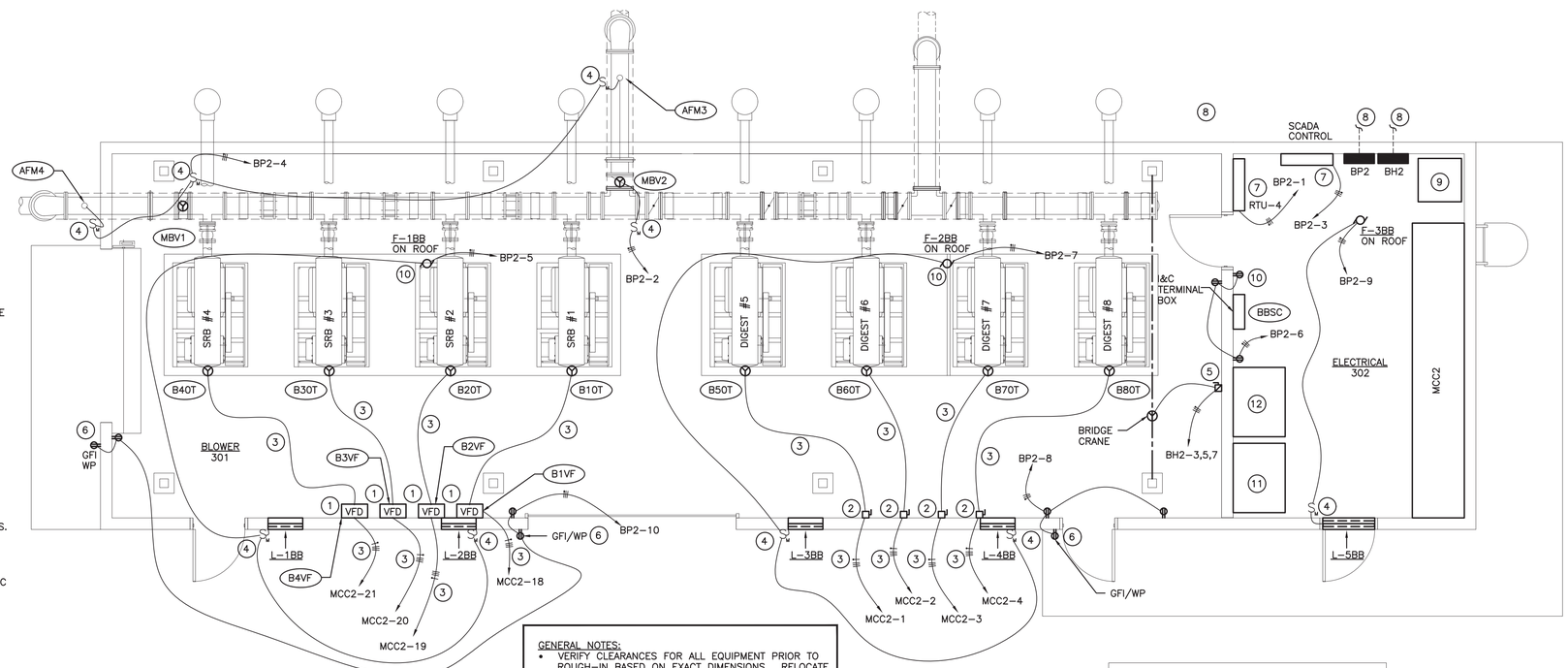

NOTES:
1. PROVIDE DISCONNECT IF NOT INCLUDED AS INTEGRAL PART OF VFD. SIZE TO OCP AND MOTOR LOAD. VFD LOCATIONS SHOWN FOR REFERENCE ONLY. LOCATE VFD'S AS REQUIRED FOR PROPER CLEARANCES.
2. 600/200/3 NON-FUSED DISCONNECT.
3. 3 #3/0, #6 GND, 2"C.
4. 1 POLE, 20A, MOTOR RATED SWITCH.
5. 600/30/3, FUSED FOR EQUIPMENT.
6. PROVIDE HEAVY DUTY WHILE-IN-USE COVER.
7. VERIFY RTU/SCADA REQUIREMENTS. CONNECT AS REQUIRED.
8. PROVIDE (4) ¾" CONDUITS FOR FUTURE. EXTEND TO 2' BEYOND BLDG FOOTPRINT. CAP, MARK LOCATIONS AND INCLUDE PULL STRING.
9. SUSPEND TRANSFORMER HIGH. VERIFY EXACT LOCATION AND CLEARENCES.
10. FAN INCLUDES INTEGRAL DISCONNECT. CONNECT COMPLETE TO FAN AND ASSOCIATED LOUVER(S).
11. PROPOSED ATS LOCATION. VERIFY CLEARANCES. RELOCATE TO MEET NEC CLEARANCE REQUIREMENTS.
12. PROPOSED MAIN DISCONNECT LOCATION. VERIFY CLEARANCES. RELOCATE TO MEET NEC CLEARANCE REQUIREMENTS.

GENERAL NOTES:
- VERIFY CLEARANCES FOR ALL EQUIPMENT PRIOR TO ROUGH-IN BASED ON EXACT DIMENSIONS. RELOCATE AS REQUIRED. VERIFY LOCATIONS W/ OWNER.
- BBSC – BLOWER BUILDING I&C TERMIINAL BOX.

BLOWER BLDG PLAN - POWER

SCALE: 1/4" = 1'-0"

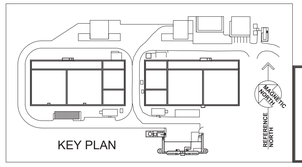

071118DR172000

BRITTAIN ENGINEERING, INC.
CONSULTING MECHANICAL AND ELECTRICAL ENGINEERS
PO BOX 939 HICKORY, NC 28603
TEL (828) 326-1813 FAX (828) 328-1814

FINAL DRAWINGS - NOT RELEASED FOR CONSTRUCTION

WK DICKSON
community infrastructure consultants
616 COLONNADE DRIVE
CHARLOTTE, NC 28205
(t)704-334-5348
(f)704-334-0078
WWW.WKDICKSON.COM
NC LICENSE NO.F-0374

NORTH CAROLINA PROFESSIONAL SEAL 7883 ENGINEER DANIAL DEBRITTAIN 10/23/18

PROFESSIONAL SEAL

REVISION RECORD

NO.	DATE	DESCRIPTION	BY
A	10/9/18	ISSUE FOR OWNER/NCDEQ REVIEW	CRF

PROJECT NAME: KILLIAN CREEK WWTP PHASE 3 UPGRADE

DRAWING TITLE: BLOWER BUILDING ELECTRICAL

PROJ. MGR.:	CRF
DESIGN BY:	
DRAWN BY:	
PROJ. DATE:	SEPT. 2018
DRAWING NUMBER:	3.A-E.1
WKD PROJ. NO.:	20170294.00.CL

COPYRIGHT © 2018 DICKSON & CO., INC. ALL RIGHTS RESERVED. REPRODUCTION OR USE OF THIS CONTENT OR THE DOCUMENT, IN WHOLE OR IN PART, WITHOUT WRITTEN PERMISSION OF DICKSON & CO., INC. IS PROHIBITED. ADDITIONS OR CHANGES TO THIS DOCUMENT AFTER THE ISSUANCE OF THIS DOCUMENT MARKED WITH AN ORIGINAL SIGNATURE AND SEAL SHALL BE CONSIDERED TO BE VALID. PRINT COPIES

BLOWER BLDG CONTROL & INSTRUMENTATION SCHEDULE

TAG	DESCRIPTION	WIRING	CONNECT FROM	CONNECT TO	NOTES
B10T	BLOWER 201 OVERTEMPERATURE	2#14, #14 GND, 3/4"C	BLOWER MOTOR 201 THERMOSENSOR	BLOWER BLDG I&C TERMINAL BOX	
B20T	BLOWER 202 OVERTEMPERATURE	2#14, #14 GND, 3/4"C	BLOWER MOTOR 202 THERMOSENSOR	BLOWER BLDG I&C TERMINAL BOX	
B30T	BLOWER 203 OVERTEMPERATURE	2#14, #14 GND, 3/4"C	BLOWER MOTOR 203 THERMOSENSOR	BLOWER BLDG I&C TERMINAL BOX	
B40T	BLOWER 204 OVERTEMPERATURE	2#14, #14 GND, 3/4"C	BLOWER MOTOR 204 THERMOSENSOR	BLOWER BLDG I&C TERMINAL BOX	
B50T	BLOWER 205 OVERTEMPERATURE	2#14, #14 GND, 3/4"C	BLOWER MOTOR 205 THERMOSENSOR	BLOWER BLDG I&C TERMINAL BOX	
B60T	BLOWER 206 OVERTEMPERATURE	2#14, #14 GND, 3/4"C	BLOWER MOTOR 206 THERMOSENSOR	BLOWER BLDG I&C TERMINAL BOX	
B70T	BLOWER 207 OVERTEMPERATURE	2#14, #14 GND, 3/4"C	BLOWER MOTOR 207 THERMOSENSOR	BLOWER BLDG I&C TERMINAL BOX	
B80T	BLOWER 208OVERTEMPERATURE	2#14, #14 GND, 3/4"C	BLOWER MOTOR 208 THERMOSENSOR	BLOWER BLDG I&C TERMINAL BOX	
B1VF	BLOWER 201 VFD CIRCUITRY	2#14, #14 GND, 3/4 "C 2#14 2#14 6#14	BLOWER 201 VFD	BLOWER BLDG I&C TERMINAL BOX	RUN COMMAND FROM SBR CONTROL PANEL (SBRCP2) RUN INDICATION BACK TO SRBCP2 VFD FAULT INDICATION BACK TO SBRCP2 SPARES
		1"C, #18 TSP #18 TSP #18 TSP			4–20mA, SPEED CONTROL FROM SBRCP2 4–20mA, SPEED FEEDBACK SIGNAL TO SBRCP2 SPARE
B2VF	BLOWER 202 VFD CIRCUITRY	2#14, #14 GND, 3/4 "C 2#14 2#14 6#14	BLOWER 202 VFD	BLOWER BLDG I&C TERMINAL BOX	RUN COMMAND FROM SBR CONTROL PANEL (SBRCP2) RUN INDICATION BACK TO SRBCP2 VFD FAULT INDICATION BACK TO SBRCP2 SPARES
		1"C, #18 TSP #18 TSP #18 TSP			4–20mA, SPEED CONTROL FROM SBRCP2 4–20mA, SPEED FEEDBACK SIGNAL TO SBRCP2 SPARE
B3VF	BLOWER 203 VFD CIRCUITRY	2#14, #14 GND, 3/4 "C 2#14 2#14 6#14	BLOWER 203 VFD	BLOWER BLDG I&C TERMINAL BOX	RUN COMMAND FROM SBR CONTROL PANEL (SBRCP2) RUN INDICATION BACK TO SRBCP2 VFD FAULT INDICATION BACK TO SBRCP2 SPARES
		1"C, #18 TSP #18 TSP #18 TSP			4–20mA, SPEED CONTROL FROM SBRCP2 4–20mA, SPEED FEEDBACK SIGNAL TO SBRCP2 SPARE
B4VF	BLOWER 204 VFD CIRCUITRY	2#14, #14 GND, 3/4 "C 2#14 2#14 6#14	BLOWER 204 VFD	BLOWER BLDG I&C TERMINAL BOX	RUN COMMAND FROM SBR CONTROL PANEL (SBRCP) RUN INDICATION BACK TO SRBCP VFD FAULT INDICATION BACK TO SBRCP SPARES
		1"C, #18 TSP #18 TSP #18 TSP			4–20mA, SPEED CONTROL FROM SBRCP2 4–20mA, SPEED FEEDBACK SIGNAL TO SBRCP2 SPARE
MBV1	SBR #3 MAIN BLOWER VALVE MBV–201 CONTROL	3#14, #14 GND, 3/4"C 3#14 4#14 4#14	VALVE MBV–245 ACTUATOR	BLOWER BLDG I&C TERMINAL BOX	OPEN/CLOSE COMMANDS TO SBRCP2 POSITION INDICATOR TO SBRCP2 TORQUE SWITCHES SPARES
		#18 TSP #18 TSP		SBRCP2	MONITOR VALVE POSITION TO SBRCP2 SPARES
MBV2	SBR #4 MAIN BLOWER VALVE MBV–202 CONTROL	3#14, #14 GND, 3/4"C 3#14 4#14 4#14	VALVE MBV–246 ACTUATOR	BLOWER BLDG I&C TERMINAL BOX	OPEN/CLOSE COMMANDS TO SBRCP2 POSITION INDICATOR TO SBRCP2 TORQUE SWITCHES SPARES
		#18 TSP #18 TSP		SBRCP2	MONITOR VALVE POSITION TO SBRCP2 SPARES
BBSC	BLOWER BLDG STATUS & CONTROL	16#14, #14 GND, 3"C 36#14 28#14 32#14 40#14	SBR #2 CONTROL PANEL (SBRCP2) (LOCATED IN MAIN OFFICE BLDG)	BLOWER BLDG I&C TERMINAL BOX	B10T THROUGH B80T CIRCUITRY BV1 THROUGH BV4VF CIRCUITRY MBV1 & MBV2 CIRCUITRY SBRD CIRCUITRY SPARES
		3"C, 6#18 TSP 6#18 TSP			B1VF THROUGH B4VF CIRCUITRY SPARES
AFM3	AIR FLOW METER FIT–201 STATUS	2 #14, #14 GND, 3/4"C #18 TSP	AIR FLOW METER FIT–201	BLOWER BLDG I&C TERMINAL BOX	MONITOR AIR FLOW SIGNAL
AFM4	AIR FLOW METER FIT–202 STATUS	2 #14, #14 GND, 3/4"C #18 TSP	AIR FLOW METER FIT–202	BLOWER BLDG I&C TERMINAL BOX	MONITOR AIR FLOW SIGNAL

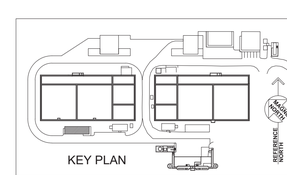

KEY PLAN

FINAL DRAWINGS

- NOT RELEASED FOR CONSTRUCTION

WK DICKSON
community infrastructure consultants
616 COLONNADE DRIVE
CHARLOTTE, NC 28205
(t)704-334-5348
(f)704-334-0078
WWW.WKDICKSON.COM
NC LICENSE NO.F-0374

NORTH CAROLINA PROFESSIONAL SEAL 7883 ENGINEER DANIAL DISBROW BRITTAIN 09/25/18

PROFESSIONAL SEAL

REVISION RECORD

NO.	DATE	DESCRIPTION	BY
A	10/9/18	ISSUE FOR OWNER/NCDEQ REVIEW	CRF

PROJECT NAME: KILLIAN CREEK WWTP PHASE 3 UPGRADE

DRAWING TITLE: BLOWER BUILDING CONTROL & INSTRUMENTATION SCHEDULE

PROJ. MGR.:	CRF
DESIGN BY:	
DRAWN BY:	
PROJ. DATE:	SEPT. 2018

DRAWING NUMBER: 3.A-E.2

WKD PROJ. NO.: 20170294.00.CL

07261 8DR172000

BRITTAIN ENGINEERING, INC.
CONSULTING MECHANICAL AND ELECTRICAL ENGINEERS
PO BOX 939 HICKORY, NC 28603
TEL (828)328-1813 FAX (828)328-1814

COPYRIGHT © WK DICKSON & CO. INC. ALL RIGHTS RESERVED. REPRODUCTION OR USE OF THE CONTENTS OF THIS DOCUMENT, ADDITIONS OR DELETIONS TO THIS DOCUMENT, IN WHOLE OR IN PART, WITHOUT WRITTEN CONSENT OF WK DICKSON & CO. IS PROHIBITED. ONLY COPIES FROM THE ORIGINAL OF THIS DOCUMENT MARKED WITH AN ORIGINAL SIGNATURE AND SEAL SHALL BE CONSIDERED TO BE VALID. FACE COPIES.

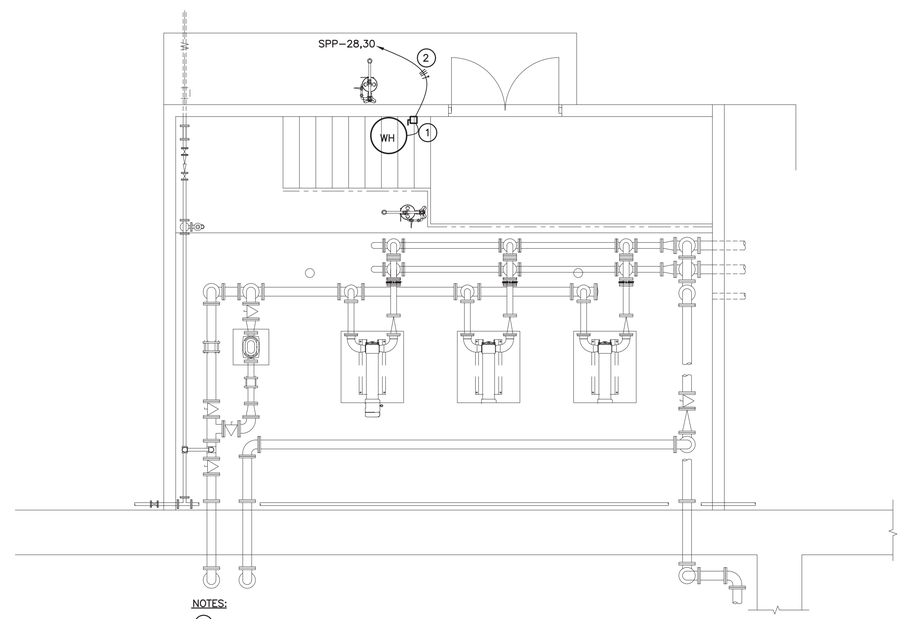

NOTES:

1. 240/30/1/4XSS NON-FUSED DISCONNECT. VERIFY EXACT LOCATION AND COORD W/ WATER HEATER INSTALLER FOR PROPER CLEARANCES.
2. 2 #10, #10 GND, ¾"C.

EXISTING SLUDGE PUMP BLDG PLAN - POWER

SCALE: 1/4" = 1'-0"

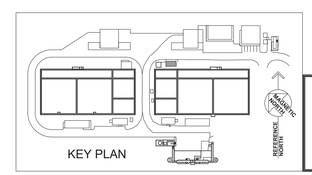

KEY PLAN

072418DR172000

BRITTAIN ENGINEERING, INC.
CONSULTING MECHANICAL AND ELECTRICAL ENGINEERS
PO BOX 939 HICKORY, NC 28603
TEL (828) 328-1813 FAX (828) 328-1814

FINAL DRAWINGS - NOT RELEASED FOR CONSTRUCTION

WK DICKSON
community infrastructure consultants
616 COLONNADE DRIVE
CHARLOTTE, NC 28205
(t)704-334-5348
(f)704-334-0078
WWW.WKDICKSON.COM
NC LICENSE NO.F-0374

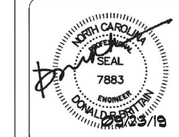

PROFESSIONAL SEAL

REVISION RECORD

NO.	DATE	DESCRIPTION	BY
A	10/9/18	ISSUE FOR OWNER/NCDEQ REVIEW	CRF

PROJECT NAME: KILLIAN CREEK WWTP PHASE 3 UPGRADE

DRAWING TITLE: EXISTING SLUDGE BUILDING ELECTRICAL

PROJ. MGR.:	CRF
DESIGN BY:	
DRAWN BY:	
PROJ. DATE:	SEPT. 2018
DRAWING NUMBER:	4-E.1
WKD PROJ. NO.:	20170294.00.CL

COPYRIGHT © 2018 DICKSON & CO., INC., ALL RIGHTS RESERVED. REPRODUCTION OR USE OF THIS CONTENT OR THE DOCUMENT, IN WHOLE OR IN PART, WITHOUT WRITTEN PERMISSION OF DICKSON & CO., INC. IS PROHIBITED. ADDITIONS OR CHANGES TO THIS DOCUMENT AFTER PRINT THE ORIGINAL OF THIS DOCUMENT MARKED WITH AN ORIGINAL SIGNATURE AND SEAL SHALL BE CONSIDERED TO BE VALID. FACE COPIES

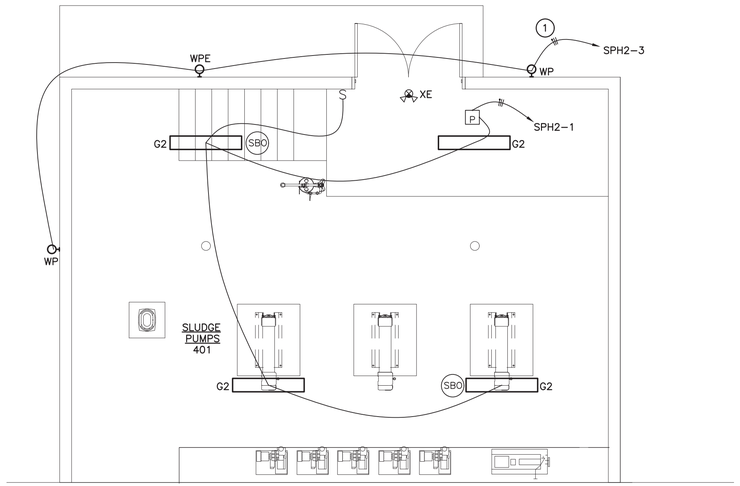

NOTES:
- SUSPEND FIXTURES AT 8'-9" AFF ABOVE PLATFORM LEVEL FOR BUILDING INTERIOR.
- CONNECT ALL EXIT & EMERGENCY FIXTURES TO NEAREST UN-SWITCHED LIGHTING CIRCUIT.

NOTES:

(1) PROVIDE LINE VOLTAGE PHOTOCELL. PLACE ON NORTH SIDE OF BUILDING.

SLUDGE PUMP BLDG PLAN - LIGHTING

SCALE: 1/4" = 1'-0"

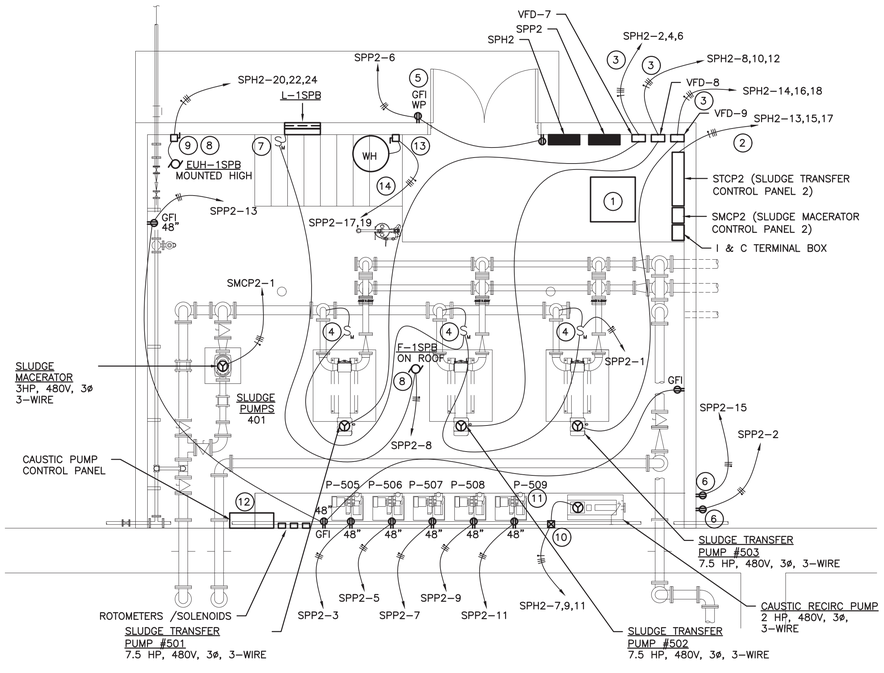

SLUDGE PUMP BLDG PLAN - POWER

SCALE: 1/4" = 1'-0"

NOTES:

(1) SUSPEND TRANSFORMER HIGH. VERIFY CLEARANCES AND EXACT LOCATION.

(2) 3 #8, #10 GND, ¾"C.

(3) 3 #10, #10 GND, ¾"C.

(4) CONNECT PRESSURE SWITCH AND GAUGE AS REQUIRED. PROVIDE 240V/15A MOTOR RATED SWITCH. PROVIDE MOUNTING MEANS. VERIFY MOUNTING HEIGHT.

(5) PROVIDE HEAVY DUTY WHILE-IN-USE COVER.

(6) PROVIDE RECEPTACLE FOR HEAT TRACE. PROVIDE HEAT TRACE FOR INSULATED CAUSTIC FEED LINE.

(7) 1 POLE, 20A, MOTOR RATED SWITCH.

(8) FAN INCLUDES INTEGRAL DISCONNECT. CONNECT COMPLETE TO FAN AND ASSOCIATED LOUVER.

(9) 600/30/3/4XSS, NON-FUSED DISCONNECT.

(10) MOTOR CONTROLLER, COMBINATION CIRCUIT BREAKER DISCONNECT, MOTOR STARTER OR VFD. PROVIDE OVERLOAD RATING BASED ON EQUIPMENT RATING BEING SERVED. PROVIDE NEMA 4XSS ENCLOSURE.

(11) VERIFY POWER CONNECTION REQUIREMENTS. MAKE CHANGES TO CONNECT COMPLETE. TYPICAL OF 5 PUMPS.

(12) PROVIDE CONTROL PANEL FOR PUMPS 505, 506 AND 507 ASSOCIATED ROTOMETERS AND SOLENOIDS. INCLUDE HAND-OFF-REMOTE SWITCH FOR EACH PUMP. INCLUDE RELAYS AND CONTACTORS AS REQUIRED TO CONTROL PUMP P-506 INDIVIDUALLY FROM ANY SBR PH MONITORING CONTROL SIGNAL. ENCLOSURE SHALL BE NEMA 4XSS. POWER ASSOCIATED SOLENOIDS AS REQUIRED. REFER TO SPECIFICATION 43 21 29.

(13) 240/30/1/4XSS NON-FUSED DISCONNECT. VERIFY EXACT LOCATION AND COORD W/ WATER HEATER INSTALLER FOR PROPER CLEARANCES.

(14) 2 #10, #10 GND, ¾"C.

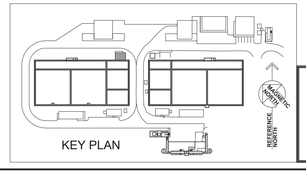

BRITTAIN ENGINEERING, INC.
CONSULTING MECHANICAL AND ELECTRICAL ENGINEERS
PO BOX 939 HICKORY, NC 28603
TEL. (828) 326-1813 FAX. (828) 326-1814

072618DR172000

FINAL DRAWINGS - NOT RELEASED FOR CONSTRUCTION

WK DICKSON
community infrastructure consultants
616 COLONNADE DRIVE
CHARLOTTE, NC 28205
(t)704-334-5348
(f)704-334-0078
WWW.WKDICKSON.COM
NC LICENSE NO.F-0374

NORTH CAROLINA PROFESSIONAL SEAL 7883 ENGINEER DANIEL DEWITT TRAIN 09/25/18

PROFESSIONAL SEAL

REVISION RECORD

NO.	DATE	DESCRIPTION	BY
A	10/9/18	ISSUE FOR OWNER/NCDEQ REVIEW	CRF

PROJECT NAME: KILLIAN CREEK WWTP PHASE 3 UPGRADE

DRAWING TITLE: SLUDGE BUILDING ELECTRICAL

PROJ. MGR.:	CRF
DESIGN BY:	
DRAWN BY:	
PROJ. DATE:	SEPT. 2018

DRAWING NUMBER: 4.A-E.1

WKD PROJ. NO.: 20170294.00.CL

COPYRIGHT © 2018 DECEMBER 28, 2018 ALL RIGHTS RESERVED. REPRODUCTION OR USE OF THIS CONTENT OF THIS DOCUMENT, ADDITIONS OR MODIFICATIONS THERETO, IN WHOLE OR IN PART, WITHOUT WRITTEN PERMISSION OF BRITTAIN ENGINEERING, INC. IS PROHIBITED. PRINT THE DRAWING OR THE DOCUMENT MARKED WITH AN ORIGINAL SIGNATURE AND SEAL SHALL BE CONSIDERED TO BE VALID. RAE COPIES

SLUDGE BLDG CONTROL & INSTRUMENTATION SCHEDULE

TAG	DESCRIPTION	WIRING	CONNECT FROM	CONNECT TO	NOTES
CRP	CAUSTIC RECIRC PUMP P-504	2#14, #14 GND, 3/4"C 2#14 6#14	CAUSITC RECIRC PUMP STARTER	SLUDGE PUMP ROOM I&C TERMINAL BOX	RUN INDICATION FAIL INDICATION SPARES
CTL	CAUSTIC TANK LEVEL LT-1	3/4"C, #18 TSP	ULTRASONIC LEVEL SENSOR	SLUDGE PUMP ROOM I&C TERMINAL BOX	4-20mA - TO EXIST TANK VERIFY REQUIREMENTS
DCP1	DIGESTER CAUSTIC PUMP P-508	2#14, #14 GND, 3/4"C 2#14 2#14 2#14	PUMP P-508 CONTROLLER	SLUDGE PUMP ROOM I&C TERMINAL BOX	REMOTE PUMP RUN COMMAND RUN INDICATION FAIL INDICATION SPARES
DCP2	DIGESTER CAUSTIC PUMP P-509	2#14, #14 GND, 3/4"C 2#14 2#14 2#14	PUMP P-509 CONTROLLER	SLUDGE PUMP ROOM I&C TERMINAL BOX	REMOTE PUMP RUN COMMAND RUN INDICATION FAIL INDICATION SPARES
S1	SOLENOID VALVE V-518	3#14, #14 GND, 3/4"C 3#14, #14 GND, 3/4"C 3#14, #14 GND, 3/4"C	SBR #3 PUMP P-505 CONTROLLER SBR #3,4 PUMP P-506 CONTROLLER	SOLENOID VALVE S1 SOLENOID VALVE S1	OPEN-CLOSE COMMAND OPEN-CLOSE COMMAND SPARES
S2	SOLENOID VALVE V-522	3#14, #14 GND, 3/4"C 3#14, #14 GND, 3/4"C 3#14, #14 GND, 3/4"C	SBR #3,4 PUMP P-506 CONTROLLER SBR #4 PUMP P-507 CONTROLLER	SOLENOID VALVE S2 SOLENOID VALVE S2	OPEN-CLOSE COMMAND OPEN-CLOSE COMMAND SPARES
S3	SOLENOID VALVE V-526	3#14, #14 GND, 3/4"C 3#14, #14 GND, 3/4"C 3#14, #14 GND, 3/4"C	DIGESTER PUMP P-508 CONTROLLER DIGESTER PUMP P-509 CONTROLLER	SOLENOID VALVE S3 SOLENOID VALVE S3	OPEN-CLOSE COMMAND OPEN-CLOSE COMMAND SPARES
SCP1	SBR CAUSTIC PUMP P-505	2#14, #14 GND, 3/4"C 2#14 2#14 2#14	SBR #3 CAUSTIC PUMP CONTROLLER	SLUDGE PUMP ROOM I&C TERMINAL BOX	REMOTE PUMP RUN COMMAND RUN INDICATION FAIL INDICATION SPARES
SCP2	SBR CAUSTIC PUMP P-506	2#14, #14 GND, 3/4"C 2#14 2#14 2#14	SBR #3,4 CAUSTIC PUMP CONTROLLER	SLUDGE PUMP ROOM I&C TERMINAL BOX	REMOTE PUMP RUN COMMAND RUN INDICATION FAIL INDICATION SPARES
SCP3	SBR CAUSTIC PUMP P-507	2#14, #14 GND, 3/4"C 2#14 2#14 2#14	SBR #4 CAUSTIC PUMP CONTROLLER	SLUDGE PUMP ROOM I&C TERMINAL BOX	REMOTE PUMP RUN COMMAND RUN INDICATION FAIL INDICATION SPARES
STP7C	SLUDGE TRANSFER PUMP P-510 CONTROLLER	5#14, #14 GND, 3/4"C	SLUDGE TRANSFER PUMP CONTROL PANEL (STCP2)	SLUDGE TRANSFER PUMP P-510 VFD	4-20mA, SLUDGE TRANS. PUMP P-510 RUN COMMANDS
		3/4"C, #18 TSP			4-20mA, SLUDGE TRANS.PUMP P-510 SPEED REFERENCE
STP8C	SLUDGE TRANSFER PUMP P-511 CONTROLLER	5#14, #14 GND, 3/4"C	SLUDGE TRANSFER PUMP CONTROL PANEL (STCP2)	SLUDGE TRANSFER PUMP P-511 VFD	4-20mA, SLUDGE TRANS. PUMP P-511 RUN COMMANDS
		3/4"C, #18 TSP			4-20mA, SLUDGE TRANS.PUMP P-511 SPEED REFERENCE
STP9C	SLUDGE TRANSFER PUMP P-512 CONTROLLER	5#14, #14 GND, 3/4"C	SLUDGE TRANSFER PUMP CONTROL PANEL (STCP2)	SLUDGE TRANSFER PUMP P-512 VFD	4-20mA, SLUDGE TRANS. PUMP P-512 RUN COMMANDS
		3/4"C, #18 TSP			4-20mA, SLUDGE TRANS.PUMP P-512 SPEED REFERENCE
STP7HP	SLUDGE TRANSFER PUMP P-510 HIGH PRESSURE	2#14, #14 GND, 3/4"C	PRESSURE SWITCH	SLUDGE TRANSFER PUMP P-510 VFD	SHUTDOWN PUMP ON HIGH PRESSURE
STP8HP	SLUDGE TRANSFER PUMP P-511 HIGH PRESSURE	2#14, #14 GND, 3/4"C	PRESSURE SWITCH	SLUDGE TRANSFER PUMP P-511 VFD	SHUTDOWN PUMP ON HIGH PRESSURE
STP9HP	SLUDGE TRANSFER PUMP P-512 HIGH PRESSURE	2#14, #14 GND, 3/4"C	PRESSURE SWITCH	SLUDGE TRANSFER PUMP P-512 VFD	SHUTDOWN PUMP ON HIGH PRESSURE
STP7S	SLUDGE TRANSFER PUMP P-510 STATUS	2#14, #14 GND, 3/4"C 2#14 2#14 2#14	SLUDGE TRANSFER PUMP P-510 VFD	SLUDGE TRANSFER PUMP CONTROL PANEL (STCP2)	RUN INDICATION FAIL INDICATION HIGH PRESSURE SHUTDOWN INDICATION HOA NOT IN AUTO POSITION
STP8S	SLUDGE TRANSFER PUMP P-511 STATUS	2#14, #14 GND, 3/4"C 2#14 2#14 2#14	SLUDGE TRANSFER PUMP P-511 VFD	SLUDGE TRANSFER PUMP CONTROL PANEL (STCP2)	RUN INDICATION FAIL INDICATION HIGH PRESSURE SHUTDOWN INDICATION HOA NOT IN AUTO POSITION
STP9S	SLUDGE TRANSFER PUMP P-512 STATUS	2#14, #14 GND, 3/4"C 2#14 2#14 2#14	SLUDGE TRANSFER PUMP P-512 VFD	SLUDGE TRANSFER PUMP CONTROL PANEL (STCP2)	RUN INDICATION FAIL INDICATION HIGH PRESSURE SHUTDOWN INDICATION HOA NOT IN AUTO POSITION
SPC	SLUDGE PUMP ROOM CONTROL	2#14, #14 GND, 1"C 5#14 5#14 5#14 8#14	ROTARY PRESS CONTROL PANEL (RPCP2) (LOCATED IN SLUDGE DEWATER BLDG 2)	SLUDGE PUMP ROOM I&C TERMINAL BOX	SLUDGE MACERATOR RUN COMMAND SLUDGE TRANSFER PUMP P-510 RUN COMMANDS SLUDGE TRANSFER PUMP P-511 RUN COMMANDS SLUDGE TRANSFER PUMP P-512 RUN COMMANDS SPARES
		1 1/2"C, #18 TSP #18 TSP #18 TSP #18 TSP #18 TSP #18 TSP 3 #18 TSP			4-20mA, SLUDGE TRANSFER P-510 SPEED REFERENCE 4-20mA, SLUDGE TRANSFER P-510 SPEED INDICATION 4-20mA, SLUDGE TRANSFER P-511 SPEED REFERENCE 4-20mA, SLUDGE TRANSFER P-511 SPEED INDICATION 4-20mA, SLUDGE TRANSFER P-512 SPEED REFERENCE 4-20mA, SLUDGE TRANSFER P-512 SPEED INDICATION SPARES
SPS	SLUDGE PUMP ROOM STATUS	6#14, #14 GND, 1 1/4"C 8#14 8#14 8#14 3#18 TSP	SLUDGE PUMP ROOM I&C TERMINAL BOX	SCADA RTU 5 (LOCATED IN SLUDGE DEWATER BUILDING 2)	SMS CIRCUITRY STP7S CIRCUITRY STP8S CIRCUITRY STP9S CIRCUITRY SPARES
		1"C, #18 TSP 2#18, TSP			4-20mA, SLUDGE TRANSFER PUMP #1 SPEED REFERENCE SPARES
SMC	SLUDGE MACERATOR CONTROL	2#14, #14 GND, 3/4"C	SLUDGE PUMP TRANSFER PUMP CONTROL PANEL (COMMAND RELAYED FROM ROTARY PRESS CONTROL PANEL (RPCP2) SEE "SPC" ABOVE	SLUDGE MACERATOR CONTROL PANEL (SMCP2)	RUN COMMAND
SMS	SLUDGE MACERATOR STATUS SM-510	2#14 2#12 4#14	SLUDGE MACERATOR CONTROL PANEL (SMCP2) CP-502		RUN INDICATION FAIL INDICATION SPARES
STCP	SLUDGE PUMP CONTROL PANEL	30#14, #14 GND, 1½"C 4#18 TSP	SLUDGE TRANSFER PUMP CONTROL PANEL (STCP2)	SLUDGE PUMP ROOM I&C TERMINAL BOX	SLUDGE TRANSFER PUMP STATUS AND CONTROL

NOTES:

1. SUSPEND TRANSFORMER HIGH. VERIFY CLEARANCES AND EXACT LOCATION.
2. 3 #8, #10 GND, ¾"C.
3. 3 #10, #10 GND, ¾"C.
4. CONNECT PRESSURE SWITCH AND GAUGE AS REQUIRED. PROVIDE 240V/15A MOTOR RATED SWITCH. PROVIDE MOUNTING MEANS. VERIFY MOUNTING HEIGHT.
5. PROVIDE HEAVY DUTY WHILE-IN-USE COVER.
6. PROVIDE RECEPTACLE FOR HEAT TRACE. PROVIDE HEAT TRACE FOR INSULATED CAUSTIC FEED LINE.
7. 1 POLE, 20A, MOTOR RATED SWITCH.
8. FAN INCLUDES INTEGRAL DISCONNECT. CONNECT COMPLETE TO FAN AND ASSOCIATED LOUVER.
9. 600/30/3/4XSS, NON-FUSED DISCONNECT.
10. MOTOR CONTROLLER, COMBINATION CIRCUIT BREAKER DISCONNECT, MOTOR STARTER OR VFD. PROVIDE OVERLOAD RATING BASED ON EQUIPMENT RATING BEING SERVED. PROVIDE NEMA 4XSS ENCLOSURE.
11. VERIFY POWER CONNECTION REQUIREMENTS. MAKE CHANGES TO CONNECT COMPLETE. TYPICAL OF 5 PUMPS.
12. PROVIDE CONTROL PANEL FOR PUMPS 505, 506 AND 507 ASSOCIATED ROTOMETERS AND SOLENOIDS. INCLUDE HAND-OFF-REMOTE SWITCH FOR EACH PUMP. INCLUDE RELAYS AND CONTACTORS AS REQUIRED TO CONTROL PUMP P-506 INDIVIDUALLY FROM ANY SBR PH MONITORING CONTROL SIGNAL. ENCLOSURE SHALL BE NEMA 4XSS. POWER ASSOCIATED SOLENOIDS AS REQUIRED. REFER TO SPECIFICATION 43 21 29.
13. 240/30/1/4XSS NON-FUSED DISCONNECT. VERIFY EXACT LOCATION AND COORD W/ WATER HEATER INSTALLER FOR PROPER CLEARANCES.
14. 2 #10, #10 GND, ¾"C.

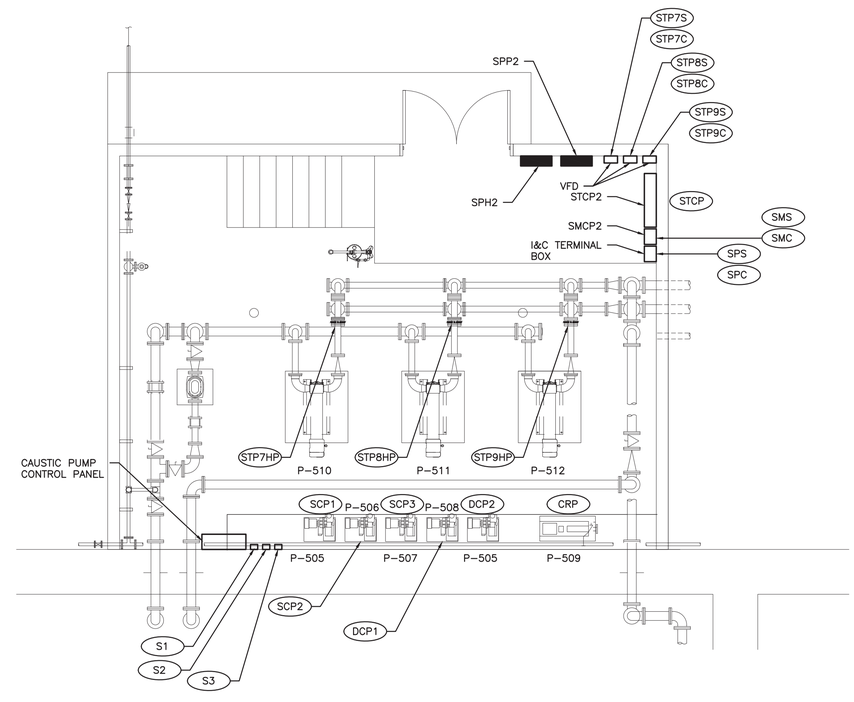

SLUDGE PUMP BLDG PLAN - C & I

SCALE: 1/4" = 1'-0"

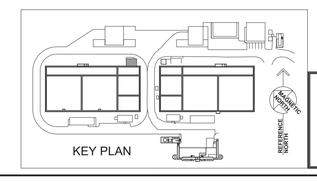

071118DR172000

BRITTAIN ENGINEERING, INC.
CONSULTING MECHANICAL AND ELECTRICAL ENGINEERS
PO BOX 939 HICKORY, NC 28603
TEL. (828) 328-1813 FAX. (828) 328-1814

WK DICKSON
community infrastructure consultants
616 COLONNADE DRIVE
CHARLOTTE, NC 28205
(t)704-334-5348
(f)704-334-0078
WWW.WKDICKSON.COM
NC LICENSE NO.F-0374

NORTH CAROLINA PROFESSIONAL SEAL 7883 ENGINEER DANIAL DISERT III
10/23/18
PROFESSIONAL SEAL

REVISION RECORD

NO.	DATE	DESCRIPTION	BY
A	10/9/18	ISSUE FOR OWNER/NCDEQ REVIEW	CRF

FINAL DRAWINGS - NOT RELEASED FOR CONSTRUCTION

PROJECT NAME: KILLIAN CREEK WWTP PHASE 3 UPGRADE

DRAWING TITLE: SLUDGE BUILDING INSTRUMENTATION & CONTROL PLAN

PROJ. MGR.:	CRF
DESIGN BY:	
DRAWN BY:	
PROJ. DATE:	SEPT. 2018
DRAWING NUMBER:	4.A-E.2
WKD PROJ. NO.:	20170294.00.CL

COPYRIGHT © 2018 DICKSON & CO., INC. ALL RIGHTS RESERVED. REPRODUCTION OR USE OF THIS CONTENT OR THE DOCUMENT, IN WHOLE OR IN PART, WITHOUT WRITTEN PERMISSION OF DICKSON & CO., INC. IS PROHIBITED. ADDITIONS OR CHANGES TO THIS DOCUMENT MUST BE MADE BY OR UNDER THE DIRECTION OF A PROFESSIONAL ENGINEER AND SEAL. PRINTS BEARING THE NAME OF THE ENGINEER AND SEAL SHALL BE CONSIDERED TO BE VALID. FACE COPIES

NOTES:

1. VERIFY TRANSFORMER LOCATION. RELOCATE AS REQUIRED. PROVIDE CONVENIENCE PAD.
2. (2) 1" CONDUITS FOR SPARE. STUB OUT TO 60" FROM BLDG FOUNDATION. PROVIDE PULL STRINGS AND CAPS.
3. CONNECT POLYMER PUMPS COMPLETE.
4. 600/30/3/4XSS, NON-FUSED DISCONNECT.
5. 3 #6, #10 GND, 1"C. PROVIDE SEAL-OFF FITTINGS AS REQUIRED.
6. 600/60/3/4XSS, NON-FUSED DISCONNECT.
7. RECEPTACLE FOR SCISSOR LIFT. VERIFY EXACT REQUIREMENTS AND LOCATIONS.
8. CONNECT OVERHEAD DOOR CONTROLS AND POWER COMPLETE. VERIFY CONTROLS LOCATION(S) PRIOR TO ROUGH-IN.
9. 600/30/3/4XSS, FUSE FOR EQUIPMENT.
10. CONNECT COMPRESSORS COMPLETE. VERIFY REQUIREMENTS.
11. PROVIDE HEAVY DUTY WHILE-IN-USE COVER.
12. VERIFY CONNECTION LOCATION FOR BRIDGE CRANE. CONNECT COMPLETE.
13. VERIFY CONTROL CABINET REQUIREMENTS. IF SUPPLIED AS ONE CABINET FOR BOTH PRESSES, MAKE CHANGES AS REQUIRED TO OCP AND CIRCUITRY.
14. 3 #1, #8 GND, 1¼"C. PROVIDE SEAL-OFF FITTINGS AS REQUIRED.
15. CONNECT POLYMER SYSTEM CONTROLS COMPLETE. VERIFY EXACT REQUIREMENTS AND LOCATION.
16. HAND-OFF-REMOTE SWITCH IN PARALLEL W/ SECOND HAND-OFF-REMOTE SWITCH AT SLUDGE HOLDING TRANSFER PUMP TO OPERATE TRANSFER PUMP REMOTELY. VERIFY EXACT REQUIREMENTS AND LOCATION W/ OWNER PRIOR TO ROUGH-IN. SEE ALSO SHEET E2.5.
17. 600/30/3/4XSS, NON-FUSED DISCONNECT.
18. 3 #10, #10 GND, ¾"C.
19. CONNECT WALL HEATER COMPLETE. PROVIDE DISCONNECT MEANS AS REQUIRED.
20. 240V, 20A, MOTOR RATED SWITCH. CONNECT TO AH TO HP COMPLETE.
21. 240/30/1/4XSS, FUSE FOR EQUIPMENT.
22. 2 #10, #10 GND, ¾"C.

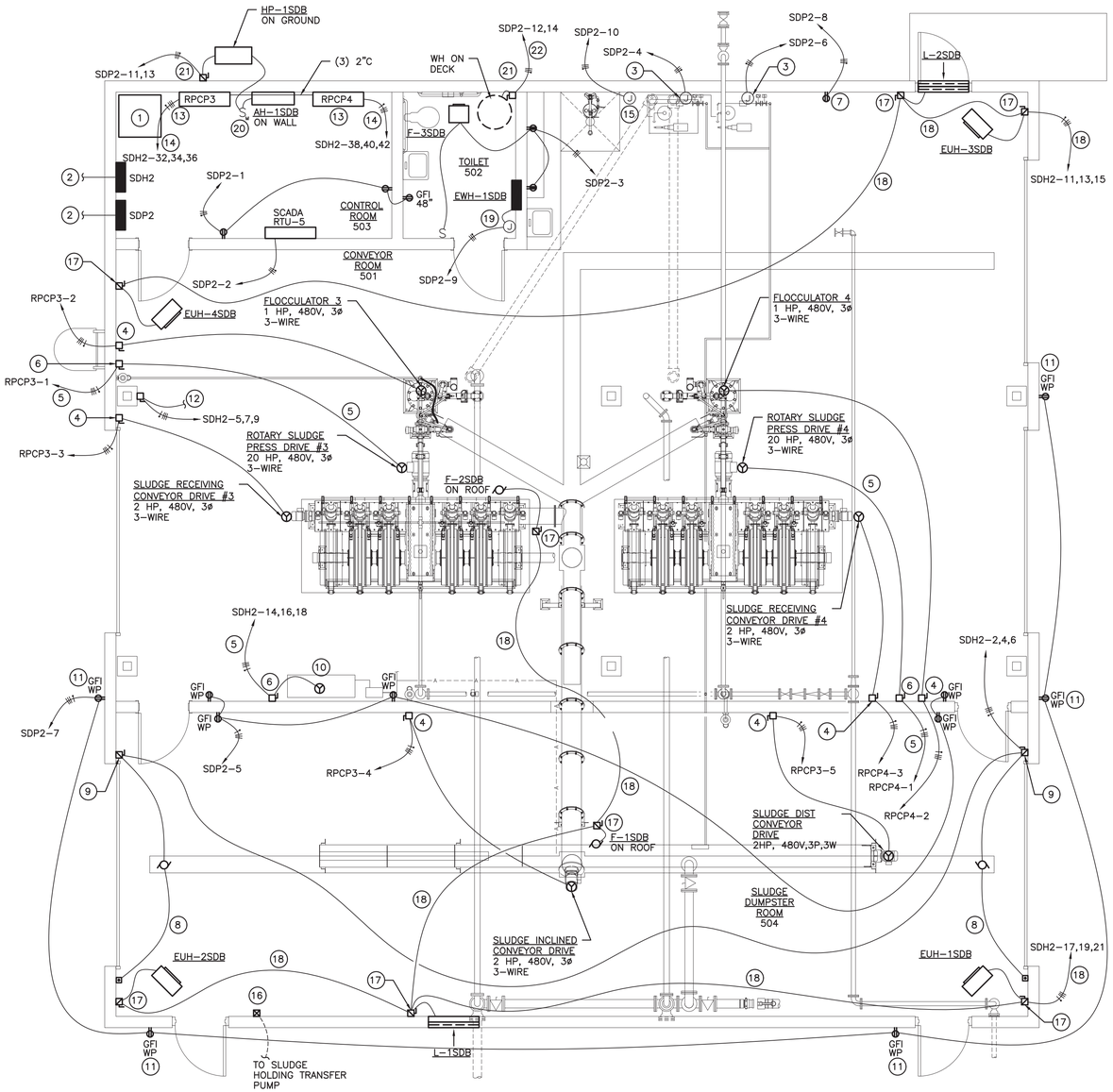

SLUDGE DEWATERING BLDG PLAN - POWER

SCALE: 1/4" = 1'-0"

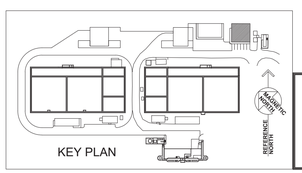

071718DR172000

BRITTAIN ENGINEERING, INC.
CONSULTING MECHANICAL AND ELECTRICAL ENGINEERS
PO BOX 939 HICKORY, NC 28603
TEL. (828) 328-1913 FAX (828) 328-1814

WK DICKSON
community infrastructure consultants
616 COLONNADE DRIVE
CHARLOTTE, NC 28205
(t)704-334-5348
(f)704-334-0078
WWW.WKDICKSON.COM
NC LICENSE NO.F-0374

NORTH CAROLINA PROFESSIONAL SEAL 7883 ENGINEER DANIEL DEBERTRAND 09/25/18

PROFESSIONAL SEAL

FINAL DRAWINGS - NOT RELEASED FOR CONSTRUCTION

REVISION RECORD

NO.	DATE	DESCRIPTION	BY
A	10/9/18	ISSUE FOR OWNER/NCDEQ REVIEW	CRF

PROJECT NAME: KILLIAN CREEK WWTP PHASE 3 UPGRADE

DRAWING TITLE: SLUDGE DEWATERING BUILDING POWER

PROJ. MGR.:	CRF
DESIGN BY:	
DRAWN BY:	
PROJ. DATE:	SEPT. 2018
DRAWING NUMBER:	5.A-E.1
WKD PROJ. NO.:	20170294.00.CL

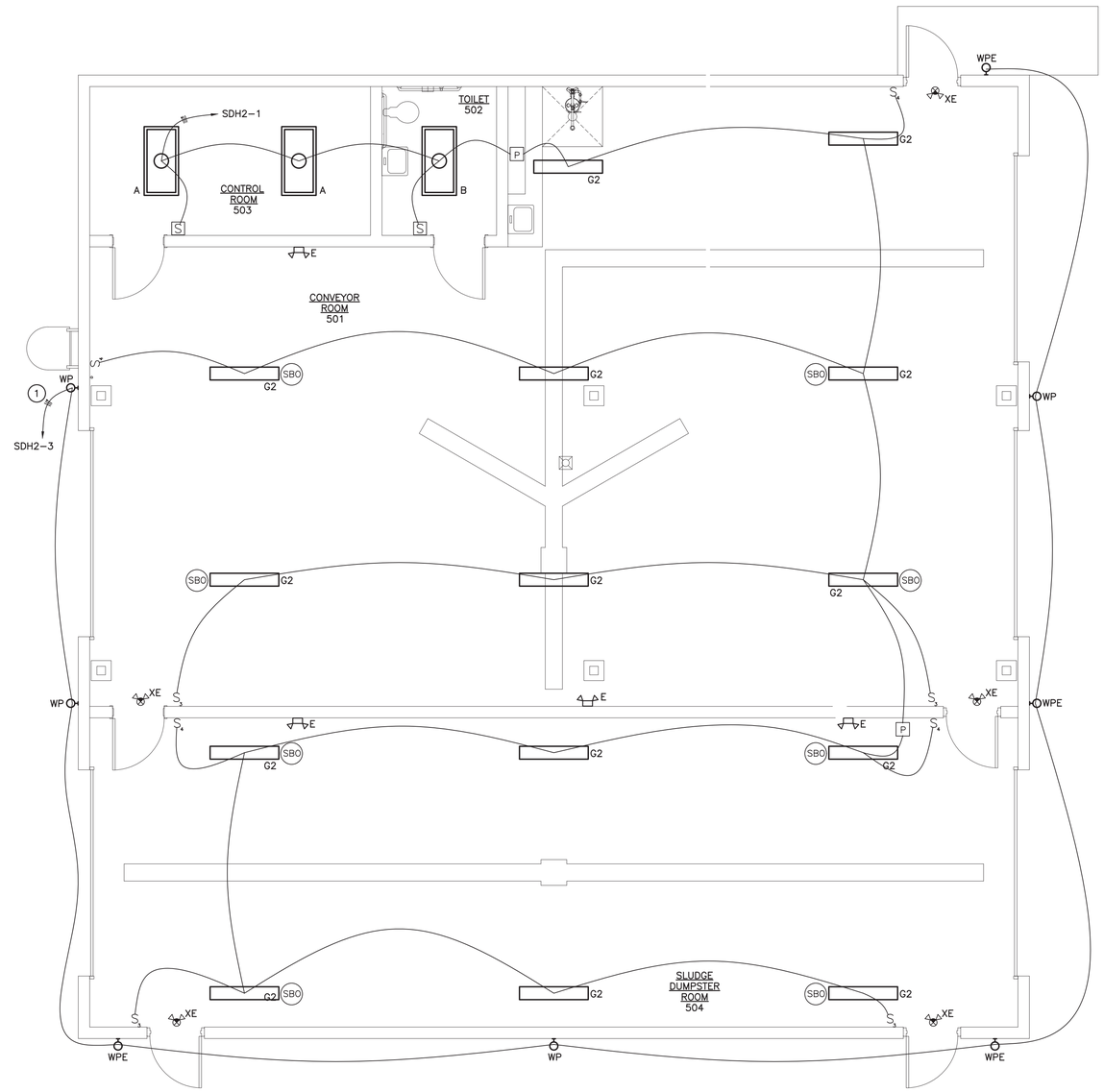

NOTES:
- SUSPEND FIXTURES AT 19'-0" AFF FOR BUILDING INTERIOR.
- VERIFY FIXTURE LOCATION W/ GC FOR OVERHEAD DOORS AND DOOR INSTALLER.
- CONNECT ALL EXIT & EMERGENCY FIXTURES TO NEAREST UN-SWITCHED LIGHTING CIRCUIT.

NOTES:

1. PROVIDE LINE VOLTAGE PHOTOCELL. PLACE ON NORTH SIDE OF BUILDING.

SLUDGE DEWATERING BLDG PLAN - LIGHTING

SCALE: 1/4" = 1'-0"

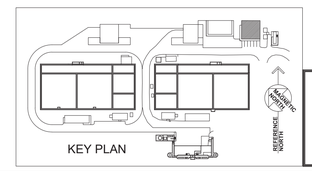

FINAL DRAWINGS - NOT RELEASED FOR CONSTRUCTION

051518DR172000

BRITTAIN ENGINEERING, INC.
CONSULTING MECHANICAL AND ELECTRICAL ENGINEERS
PO BOX 939 HICKORY, NC 28603
TEL (828) 328-1813 FAX (828) 328-1814

WK DICKSON
community infrastructure consultants
616 COLONNADE DRIVE
CHARLOTTE, NC 28205
(t)704-334-5348
(f)704-334-0078
WWW.WKDICKSON.COM
NC LICENSE NO.F-0374

NORTH CAROLINA PROFESSIONAL SEAL 7883 ENGINEER DONALD BRITTAIN 09/23/19

PROFESSIONAL SEAL

REVISION RECORD

NO.	DATE	DESCRIPTION	BY
A	10/9/18	ISSUE FOR OWNER/NCDEQ REVIEW	CRF

PROJECT NAME: KILLIAN CREEK WWTP PHASE 3 UPGRADE

DRAWING TITLE: SLUDGE DEWATERING BUILDING LIGHTING

PROJ. MGR.:	CRF
DESIGN BY:	
DRAWN BY:	
PROJ. DATE:	SEPT. 2018
DRAWING NUMBER:	5.A-E.2
WKD PROJ. NO.:	20170294.00.CL

COPYRIGHT © WK DICKSON & CO., INC. ALL RIGHTS RESERVED. REPRODUCTION OR USE OF THE CONTENTS OF THIS DOCUMENT, ADDITIONS OR DELETIONS TO THIS DOCUMENT, IN WHOLE OR IN PART, WITHOUT WRITTEN CONSENT OF WK DICKSON & CO., INC. IS PROHIBITED. ONLY COPIES FROM THE ORIGINAL OF THIS DOCUMENT MARKED WITH AN ORIGINAL SIGNATURE AND SEAL SHALL BE CONSIDERED TO BE VALID, TRUE COPIES.

COPYRIGHT © 2018 DICKSON & CO., INC. ALL RIGHTS RESERVED. REPRODUCTION OR USE OF THIS CONTENT OR THE DOCUMENT, IN WHOLE OR IN PART, WITHOUT WRITTEN PERMISSION OF DICKSON & CO., INC. IS PROHIBITED. ADDITIONS OR CHANGES TO THIS DOCUMENT AFTER PRINT PRODUCTION BY OTHERS THAN THE OWNER OF THE DOCUMENT MARKED WITH AN ORIGINAL SIGNATURE AND SEAL SHALL BE CONSIDERED TO BE NULL IN AND VOID.

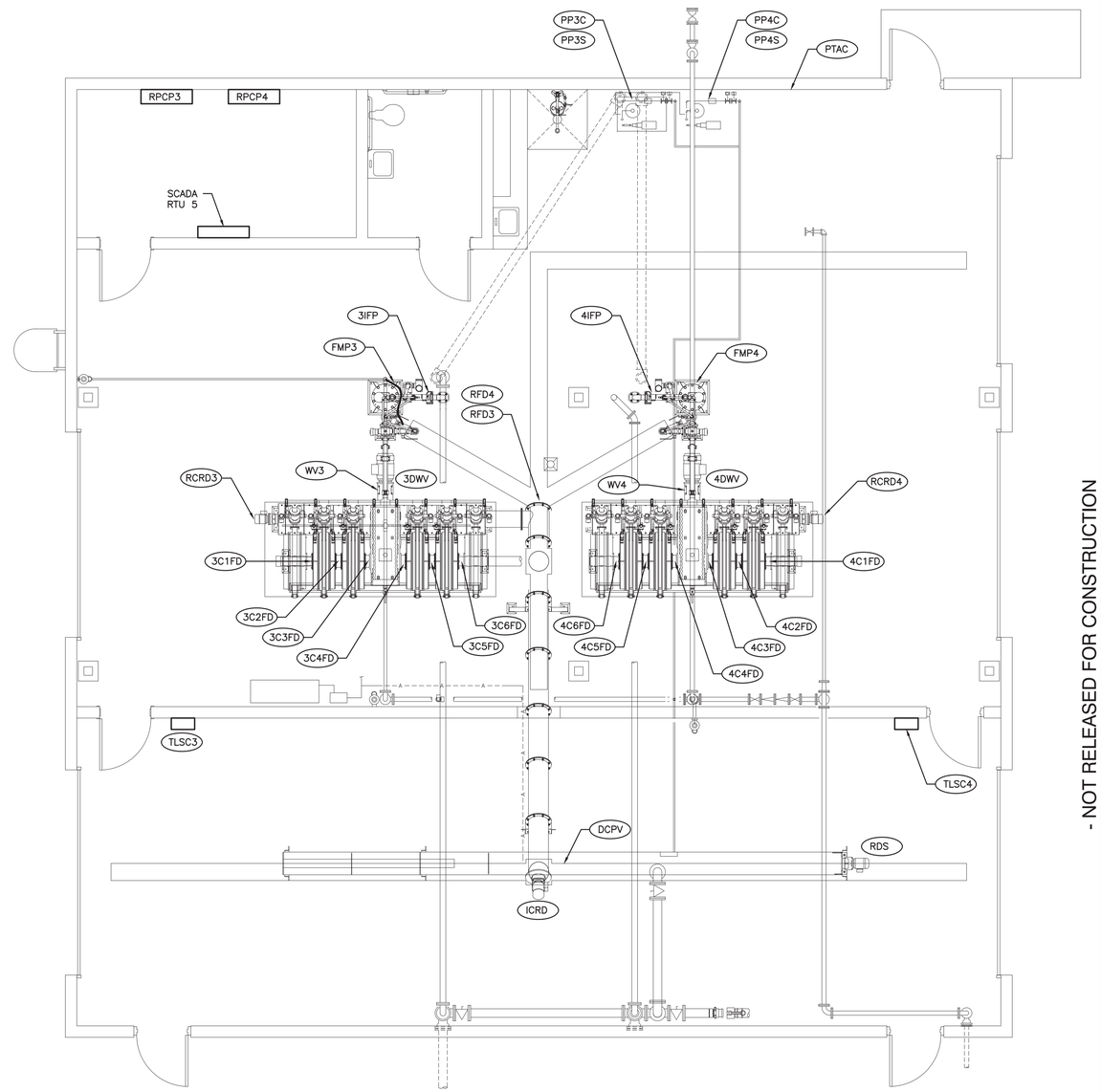

SLUDGE DEWATERING BLDG PLAN
INSTRUMENTATION & CONTROL

SCALE: 1/4" = 1'-0"

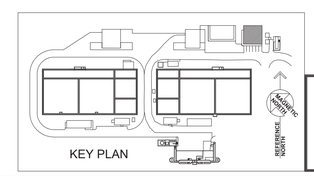

071618DR172000

BRITTAIN ENGINEERING, INC.
CONSULTING MECHANICAL AND ELECTRICAL ENGINEERS
PO BOX 939 HICKORY, NC 28603
TEL. (828)328-1813 FAX. (828)328-1814

FINAL DRAWINGS - NOT RELEASED FOR CONSTRUCTION

WK DICKSON
community infrastructure consultants
616 COLONNADE DRIVE
CHARLOTTE, NC 28205
(t)704-334-5348
(f)704-334-0078
WWW.WKDICKSON.COM
NC LICENSE NO.F-0374

NORTH CAROLINA PROFESSIONAL SEAL 7883 ENGINEER DANIAL DISBERT TAPP 10/29/18

PROFESSIONAL SEAL

REVISION RECORD

NO.	DATE	DESCRIPTION	BY
A	10/9/18	ISSUE FOR OWNER/NCDEQ REVIEW	CRF

PROJECT NAME: KILLIAN CREEK WWTP PHASE 3 UPGRADE

DRAWING TITLE: SLUDGE DEWATERING BUILDING INSTRUMENTATION & CONTROL PLAN

PROJ. MGR.:	CRF
DESIGN BY:	
DRAWN BY:	
PROJ. DATE:	SEPT. 2018

DRAWING NUMBER: 5.A-E.3

WKD PROJ. NO.: 20170294.00.CL

COPYRIGHT © 2018 DICKSON & CO., INC. ALL RIGHTS RESERVED. REPRODUCTION OR USE OF THIS CONTENT OF THIS DOCUMENT WITHOUT WRITTEN PERMISSION IS PROHIBITED. THIS DOCUMENT IS PROTECTED UNDER COPYRIGHT LAWS. ADDITIONS OR CHANGES TO THIS DOCUMENT WITHOUT PRIOR THE CONSENT OF THE DOCUMENT'S MARKED WITH AN ORIGINAL SIGNATURE AND SEAL SHALL BE CONSIDERED TO BE VALID. FACE COPIES

SLUDGE DEWATERING BLDG CONTROL & INSTRUMENTATION SCHEDULE

TAG	DESCRIPTION	WIRING	CONNECT FROM	CONNECT TO	NOTES
3C1FD	RSP-3 CH 1 FLUSH DETECTION	2#14, #14 GND, 3/4 "C	CHANNEL 1 FLUSH DETECTOR	CONVEYOR JUNCTION BOX	
3C2FD	RSP-3 CH 2 FLUSH DETECTION	2#14, #14 GND, 3/4 "C	CHANNEL 2 FLUSH DETECTOR	CONVEYOR JUNCTION BOX	
3C3FD	RSP-3 CH 3 FLUSH DETECTION	2#14, #14 GND, 3/4 "C	CHANNEL 3 FLUSH DETECTOR	CONVEYOR JUNCTION BOX	
3C4FD	RSP-3 CH 4 FLUSH DETECTION	2#14, #14 GND, 3/4 "C	CHANNEL 4 FLUSH DETECTOR	CONVEYOR JUNCTION BOX	
3C5FD	RSP-3 CH 5 FLUSH DETECTION	2#14, #14 GND, 3/4 "C	CHANNEL 5 FLUSH DETECTOR	CONVEYOR JUNCTION BOX	
3C6FD	RSP-3 CH 6 FLUSH DETECTION	2#14, #14 GND, 3/4 "C	CHANNEL 6 FLUSH DETECTOR	CONVEYOR JUNCTION BOX	
3DWV	DEWATERING VALVE 1	5#14, #14 GND, 3/4 "C	ROTARY PRESS CONTROL PANEL 3 (RPCP3)	DEWATERING VALVE 3	START & DISCRETE SIGNAL
ICRD	C-603 INCLINED CONVEYOR ROT	2#14, #14 GND, 3/4 "C	INCLINED CONVEYOR ROTATION DETECTION	CONVEYOR JUNCTION BOX	
3IPF	INLET PRESSURE FLOW	3/4"C, #18 TSP	ROTARY PRESS CONTROL PANEL 3 (RPCP3)	PRESSURE TRANSDUCER AT FLOCCULATOR 1	4-20mA, PRESSURE SIGNAL
		#18 TSP		POLYMER FLOW METER 1	4-20mA, FLOW SIGNAL
4C1FD	RSP-4 CH 1 FLUSH DETECTION	2#14, #14 GND, 3/4 "C	CHANNEL 1 FLUSH DETECTOR	CONVEYOR JUNCTION BOX	
4C2FD	RSP-4 CH 2 FLUSH DETECTION	2#14, #14 GND, 3/4 "C	CHANNEL 2 FLUSH DETECTOR	CONVEYOR JUNCTION BOX	
4C3FD	RSP-4 CH 3 FLUSH DETECTION	2#14, #14 GND, 3/4 "C	CHANNEL 3 FLUSH DETECTOR	CONVEYOR JUNCTION BOX	
4C4FD	RSP-4 CH 4 FLUSH DETECTION	2#14, #14 GND, 3/4 "C	CHANNEL 4 FLUSH DETECTOR	CONVEYOR JUNCTION BOX	
4C5FD	RSP-4 CH 5 FLUSH DETECTION	2#14, #14 GND, 3/4 "C	CHANNEL 5 FLUSH DETECTOR	CONVEYOR JUNCTION BOX	
4C6FD	RSP-4 CH 6 FLUSH DETECTION	2#14, #14 GND, 3/4 "C	CHANNEL 6 FLUSH DETECTOR	CONVEYOR JUNCTION BOX	
4DWV	DEWATERING VALVE 1	5#14, #14 GND, 3/4 "C	ROTARY PRESS CONTROL PANEL 4 (RPCP4)	DEWATERING VALVE 3	START & DISCRETE SIGNAL
4IPF	INLET PRESSURE FLOW	3/4"C, #18 TSP	ROTARY PRESS CONTROL PANEL 4 (RPCP4)	PRESSURE TRANSDUCER AT FLOCCULATOR 1	4-20mA, PRESSURE SIGNAL
		#18 TSP		POLYMER FLOW METER 1	4-20mA, FLOW SIGNAL
PP3C	POLYMER PUMP 3 CONTROL P-601	5#14, #14 GND, 3/4 "C	ROTARY PRESS CONTROL PANEL 3 (RPCP3)	POLYMER PUMP 3 VFD	START/RUN
		3/4"C, #18 TSP			4-20mA, SPEED PACING & INDICATION
PP3S	POLYMER PUMP 3 STATUS P-601	2#14, #14 GND, 3/4 "C 2#14	POLYMER PUMP 3 VFD	SCADA RTU 5	RUN STATUS ALARM / NOT IN AUTO, LOW WATER OR POLYMER FLOW
PP4C	POLYMER PUMP 4 CONTROL P-602	5#14, #14 GND, 3/4 "C	ROTARY PRESS CONTROL PANEL 4 (RPCP4)	POLYMER PUMP 4 VFD	START/RUN
		3/4"C, #18 TSP			4-20mA, SPEED PACING & INDICATION
PP4S	POLYMER PUMP 4 STATUS P-602	2#14, #14 GND, 3/4 "C 2#14	POLYMER PUMP 4 VFD	SCADA RTU 5	RUN STATUS ALARM / NOT IN AUTO, LOW WATER OR POLYMER FLOW
RCRD3	RECEIVING CONVEYOR ROTATION	4#14, #14 GND, 3/4 "C	RECEIVING CONVEYOR ROTATION DETECTION	CONVEYOR JUNCTION BOX	
RCRD4	RECEIVING CONVEYOR ROTATION	4#14, #14 GND, 3/4 "C	RECEIVING CONVEYOR ROTATION DETECTION	CONVEYOR JUNCTION BOX	
RFD3	ROTATION & FLUSH DETECTION C-601	2#14, #14 GND, 3/4 "C 2#14 2#14 2#14 2#14 2#14 2#14 2#14 16#14	CONVEYOR JUNCTION BOX	ROTARY PRESS CONTROL PANEL 3 (RPCP3)	INCLINED CONVEYOR ROTATION DETECTION RECEIVING CONVEYOR 3 ROTATION DETECTION RSP-3 CHANNEL 1 DETECTION RSP-3 CHANNEL 2 DETECTION RSP-3 CHANNEL 3 DETECTION RSP-3 CHANNEL 4 DETECTION RSP-3 CHANNEL 5 DETECTION RSP-3 CHANNEL 6 DETECTION SPARES
RFD4	ROTATION & FLUSH DETECTION C-602	2#14, #14 GND, 3/4 "C 2#14 2#14 2#14 2#14 2#14 2#14 2#14 2#14 16#14	CONVEYOR JUNCTION BOX	ROTARY PRESS CONTROL PANEL 4 (RPCP4)	INCLINED CONVEYOR ROTATION DETECTION RECEIVING CONVEYOR 4 ROTATION DETECTION RSP-4 CHANNEL 1 DETECTION RSP-4 CHANNEL 2 DETECTION RSP-4 CHANNEL 3 DETECTION RSP-4 CHANNEL 4 DETECTION RSP-4 CHANNEL 5 DETECTION RSP-4 CHANNEL 6 DETECTION SPARES
RPS3	RSP-3 ROTARY PRESS STATUS	2#14, #14 GND, 1 1/4 "C 2#14 2#14 2#14 2#14 2#14 2#14 2#14 4#14 2#14 2#14 2#14 2#14 2#14 2#14 2#14 2#14 2#14 2#14 2#14 2#14 2#14 2#14 2#14 2#14 2#14 2#14 2#14 2#14 2#14 10#14	ROTARY PRESS CONTROL PANEL 3	SCADA RTU 5	POLYMER MIXER RUN STATUS POLYMER MIXER ALARM/FAILURE INDICATION POLYMER FEED DISTRIBUTION SYSTEM STATUS PDS-601 ROTARY PRESS 3 RUN STATUS ROTARY PRESS 3 ALARM/FAILURE INDICATION HIGH INLET PRESSURE AT FLOCCULATOR 3 EMERGENCY STOP - ROTARY PRESS 3 FLOCCULATOR 3 FAIL TO START INDICATION DEWATER VALVE 3 POSITION FAULT SLUDGE PUMP P-501 LOW FLOW INDICATION SLUDGE PUMP P-501FAIL TO START INDICATION SLUDGE PUMP P-502 LOW FLOW INDICATION SLUDGE PUMP P-502 FAIL TO START INDICATION POLYMER PUMP 3 LOW FLOW INDICATION POLYMER PUMP 3 FAIL TO START INDICATION POLYMER PUMP 4 LOW FLOW INDICATION POLYMER PUMP 4 FAIL TO START INDICATION RECEIVING CONV. 3 C-601 FAIL TO START INDICATION RECEIVING CONV. 3 C-601OVERLOAD INDICATION REC. CONV. 3 C-601 LOSS OF ROTATION INDICATION INCLINED CONVEYOR C-603 FAIL TO START INDICATION INCLINED CONVEYOR C-603 OVERLOAD INDICATION INCLINED CONV. C-603 LOSS OF ROTATION INDICATION DIST. CONVEYOR C-604 FAIL TO START INDICATION DIST. CONVEYOR C-604 OVERLOAD INDICATION DIST. CONVEYOR C-604 LOSS OF ROTATION INDICATION SLUDGE FEED LINE HIGH PRESS INDICATION PIT-601 POLYMER FEED LINE HIGH PRESSURE INDICATION FLUSH DETECTION PNEUMATIC AIR SUPPLY LOW PRESSURE INDICATION SPARES

1. Polymer System HOA Out of Auto Condition
2. Low Dilution Water Flow Alarm Condition
3. Low Polymer Pump Flow Alarm Condition

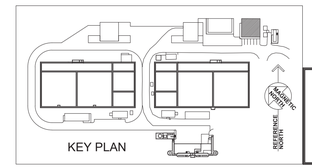

WK DICKSON
community infrastructure consultants
616 COLONNADE DRIVE
CHARLOTTE, NC 28205
(t)704-334-5348
(f)704-334-0078
WWW.WKDICKSON.COM
NC LICENSE NO.F-0374

NORTH CAROLINA PROFESSIONAL SEAL 7883 ENGINEER DANIEL DEWITT TAYLOR 09/25/18

PROFESSIONAL SEAL

REVISION RECORD

NO.	DATE	DESCRIPTION	BY
A	10/9/18	ISSUE FOR OWNER/NCDEQ REVIEW	CRF

- NOT RELEASED FOR CONSTRUCTION

FINAL DRAWINGS

PROJECT NAME: KILLIAN CREEK WWTP PHASE 3 UPGRADE

DRAWING TITLE: SLUDGE DEWATERING BUILDING INSTRUMENTATION & CONTROL PLAN

PROJ. MGR.:	CRF
DESIGN BY:	
DRAWN BY:	
PROJ. DATE:	SEPT. 2018

DRAWING NUMBER: 5.A-E.4

WKD PROJ. NO.: 20170294.00.CL

071618DR172000

BRITTAIN ENGINEERING, INC.
CONSULTING MECHANICAL AND ELECTRICAL ENGINEERS
PO BOX 939 HICKORY, NC 28603
TEL. (828) 328-1813 FAX. (828) 328-1814

COPYRIGHT © 2018 DICKSON & CO., INC. ALL RIGHTS RESERVED. REPRODUCTION OR USE OF THIS CONTENT OR THE DOCUMENT, IN WHOLE OR IN PART, WITHOUT WRITTEN PERMISSION OF DICKSON & CO., INC. IS PROHIBITED. ONLY THE ORIGINAL PRINT OF THIS DOCUMENT MARKED WITH AN ORIGINAL SIGNATURE AND SEAL SHALL BE CONSIDERED TO BE VALID. FACE COPIES

SLUDGE DEWATERING BLDG CONTROL & INSTRUMENTATION SCHEDULE

TAG	DESCRIPTION	WIRING	CONNECT FROM	CONNECT TO	NOTES
RPS4	ROTARY PRESS STATUS	2#14, #14 GND, 1 1/4" C 2#14 2#14 2#14 2#14 2#14 2#14 2#14 4#14 2#14 2#14 2#14 2#14 2#14 2#14 2#14 2#14 2#14 2#14 2#14 2#14 2#14 2#14 2#14 2#14 2#14 2#14 10#14	ROTARY PRESS CONTROL PANEL 4	SCADA RTU 5	POLYMER MIXER RUN STATUS POLYMER MIXER ALARM/FAILURE INDICATION POLYMER FEED DISTRIBUTION SYSTEM STATUS PDS-602 ROTARY PRESS 4 RUN STATUS ROTARY PRESS 4 ALARM/FAILURE INDICATION HIGH INLET PRESSURE AT FLOCCULATOR 4 EMERGENCY STOP - ROTARY PRESS 4 FLOCCULATOR 4 FAIL TO START INDICATION DEWATER VALVE 4 POSITION FAULT SLUDGE PUMP P-503 LOW FLOW INDICATION SLUDGE PUMP P-503 FAIL TO START INDICATION SLUDGE PUMP P-502 LOW FLOW INDICATION SLUDGE PUMP P-502 FAIL TO START INDICATION POLYMER PUMP 3 LOW FLOW INDICATION POLYMER PUMP 3 FAIL TO START INDICATION POLYMER PUMP 4 LOW FLOW INDICATION POLYMER PUMP 4 FAIL TO START INDICATION RECEIVING CONV. 3 C-602 FAIL TO START INDICATION RECEIVING CONV. 3 C-602 OVERLOAD INDICATION REC. CONV. 3 C-602 LOSS OF ROTATION INDICATION INCLINED CONVEYOR C-603 FAIL TO START INDICATION INCLINED CONVEYOR C-603 OVERLOAD INDICATION INCLINED CONV. C-603 LOSS OF ROTATION INDICATION DIST. CONVEYOR C-604 FAIL TO START INDICATION DIST. CONVEYOR C-604 OVERLOAD INDICATION DIST. CONVEYOR C-604 LOSS OF ROTATION INDICATION SLUDGE FEED LINE HIGH PRESS. INDICATION PIT-603 POLYMER FEED LINE HIGH PRESS. INDICATION PIT-604 FLUSH DETECTION PNEUMATIC AIR SUPPLY LOW PRESS. IND. PIT-605 SPARES
WV3	WASH VALVES AT ROTARY PRESS 3	12#14, #14 GND, 3/4" C 2#14, #14 GND, 3/4" C 2#14, #14 GND, 3/4" C 2#14, #14 GND, 3/4" C 2#14, #14 GND, 3/4" C 2#14, #14 GND, 3/4" C 2#14, #14 GND, 3/4" C 2#18,TSP, 3/4"C	ROTARY PRESS CONTROL PANEL 3 JUNCTION BOX AT ROTARY PRESS 3	JUNCTION BOX AT ROTARY PRESS 3 JUNCTION BOX TO CHANNEL 1 WASH VALVE JUNCTION BOX TO CHANNEL 2 WASH VALVE JUNCTION BOX TO CHANNEL 3 WASH VALVE JUNCTION BOX TO CHANNEL 4 WASH VALVE JUNCTION BOX TO CHANNEL 5 WASH VALVE JUNCTION BOX TO CHANNEL 6 WASH VALVE	120V FOR ALL IP CONNECTION
WV4	WASH VALVES AT ROTARY PRESS 4	12#14, #14 GND, 3/4" C 2#14, #14 GND, 3/4" C 2#14, #14 GND, 3/4" C 2#14, #14 GND, 3/4" C 2#14, #14 GND, 3/4" C 2#14, #14 GND, 3/4" C 2#14, #14 GND, 3/4" C 2#18,TSP, 3/4"C	ROTARY PRESS CONTROL PANEL 3 JUNCTION BOX AT ROTARY PRESS 3	JUNCTION BOX AT ROTARY PRESS 4 JUNCTION BOX TO CHANNEL 1 WASH VALVE JUNCTION BOX TO CHANNEL 2 WASH VALVE JUNCTION BOX TO CHANNEL 3 WASH VALVE JUNCTION BOX TO CHANNEL 4 WASH VALVE JUNCTION BOX TO CHANNEL 5 WASH VALVE JUNCTION BOX TO CHANNEL 6 WASH VALVE	120V FOR ALL IP CONNECTION
DCPV	DISTRIBUTING CONVEYOR CONTROL VALVES	9#14, #14 GND, 3/4 "C	RPCP3,4	CONVEYOR PNEUMATIC VAVLES	
FMP3	SLUDGE & POLYMER FLOW METERS	2#14, #14 GND, 3/4 "C 2#14 3/4"C, #18 TSP #18 TSP	ROTARY PRESS 3 CONTROL PANEL (RP3CP)	SLUDGE FLOW METER POLYMER FLOW METER SLUDGE FLOW METER POLYMER FLOW METER	POWER POWER SLUDGE FLOW POLYMER FLOW
FMP4	SLUDGE & POLYMER FLOW METERS	2#14, #14 GND, 3/4 "C 2#14 3/4"C, #18 TSP #18 TSP	ROTARY PRESS 4 CONTROL PANEL (RP4CP)	SLUDGE FLOW METER POLYMER FLOW METER SLUDGE FLOW METER POLYMER FLOW METER	POWER POWER SLUDGE FLOW POLYMER FLOW
TLSC3	TRUCK LOADING STATION CONTROL	2#14, #14 GND, 3/4 "C 2#14	TRUCK LOADING STATION PENDANT CONTROLLER	SCADA RTU 5	RUN COMMAND FOR SBR SLUDGE HOLDING TRANSFER PUMP RUN COMMAND FOR DIGESTER #3 SLUDGE PUMP
TLSC4	TRUCK LOADING STATION CONTROL	2#14, #14 GND, 3/4 "C 2#14	TRUCK LOADING STATION PENDANT CONTROLLER	SCADA RTU 5	RUN COMMAND FOR SBR SLUDGE HOLDING TRANSFER PUMP RUN COMMAND FOR DIGESTER #4 SLUDGE PUMP
RDS	HORIZONTAL CONVEYOR ROTATION DETECTION	4#14, #14 GND, 3/4 "C 4#14, #14 GND, 3/4 "C	HORIZONTAL CONVEYOR DETECTOR HORIZONTAL CONVEYOR DETECTOR	ROTARY PRESS CONTROL PANEL 3 ROTARY PRESS CONTROL PANEL 3	ROTATION DETECTION STATUS ROTATION DETECTION STATUS

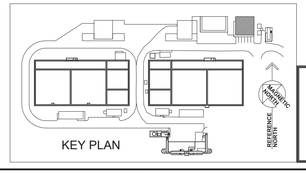

071618DR172000

BRITTAIN ENGINEERING, INC.
CONSULTING MECHANICAL AND ELECTRICAL ENGINEERS
PO BOX 930 HICKORY, NC 28603
TEL. (828) 326-1813 FAX. (828) 326-1814

FINAL DRAWINGS - NOT RELEASED FOR CONSTRUCTION

WK DICKSON
community infrastructure consultants
616 COLONNADE DRIVE
CHARLOTTE, NC 28205
(t)704-334-5348
(f)704-334-0078
WWW.WKDICKSON.COM
NC LICENSE NO.F-0374

NORTH CAROLINA PROFESSIONAL SEAL 7883 ENGINEER DONALD ROBERT TAYLOR 10/9/18

PROFESSIONAL SEAL

REVISION RECORD

NO.	DATE	DESCRIPTION	BY
A	10/9/18	ISSUE FOR OWNER/NCDEQ REVIEW	CRF

PROJECT NAME: KILLIAN CREEK WWTP PHASE 3 UPGRADE

DRAWING TITLE: SLUDGE DEWATERING BUILDING CONTROL AND INSTRUMENTATION

PROJ. MGR.:	CRF
DESIGN BY:	
DRAWN BY:	
PROJ. DATE:	SEPT. 2018

DRAWING NUMBER: 5.A-E.5

WKD PROJ. NO.: 20170294.00.CL

COPYRIGHT © 2018 DICKSON & CO., INC. ALL RIGHTS RESERVED. REPRODUCTION OR USE OF THIS CONTENT OR THE DOCUMENT, IN WHOLE OR IN PART, WITHOUT WRITTEN PERMISSION OF DICKSON & CO., INC. IS PROHIBITED. ALL OTHER RIGHTS RESERVED. PRINT PRIVILEGES OF THIS DOCUMENT MARKED WITH AN ORIGINAL SIGNATURE AND SEAL SHALL BE CONSIDERED TO BE VALID. PRINT COPIES

EFFLUENT UV BLDG CONTROL & INSTRUMENTATION SCHEDULE

TAG	DESCRIPTION	WIRING	CONNECT FROM	CONNECT TO	NOTES
EFL2	EFFLUENT FLOW METER	MFR CABLE 3/4"C, #18 TSP	FLOW METER TRANSDUCER FLOW METER TRANSMITTER/RECORDER	FLOW METER TRANSMITTER/RECORDER SCADA RTU 3	4–20mA
RFP2	RECIRCULATION PUMP FLOATS	1"C MFR CABLE	FLOAT SWITCHES	LOW FLOW RECIRC PUMP STARTER	START & STOP CONTROL FOR PUMP
UVS3	UV SYSTEM STATUS	2#14, #12GND, 3/4"C 2#14 2#14 2#14 2#14 4#14	UV SYSTEM ENCLOSURE	SCADA RTU 3	UV SYSTEM POWER FAILURE INDICATION CRITICAL INSTRUMENT FAILURE INDICATION FAILURE TO MEET UV DOSE INDICATION LOW PRIORITY ALARM INDICATION HIGH PRIORITY ALARM INDICATION SPA RES
UVS4	UV SYSTEM STATUS	2#14, #12GND, 3/4"C 2#14 2#14 2#14 2#14 4#14	UV SYSTEM ENCLOSURE	SCADA RTU 3	UV SYSTEM POWER FAILURE INDICATION CRITICAL INSTRUMENT FAILURE INDICATION FAILURE TO MEET UV DOSE INDICATION LOW PRIORITY ALARM INDICATION HIGH PRIORITY ALARM INDICATION SPA RES

NOTE:
MODIFICATIONS TO THE EXIST UV SYSTEM WERE MADE TO ELIMINATE HARDWIRED MONITORING OF THE UV SYSTEM TO INCLUDE THE ADDITION OF MODBUS TCP COMM LINK. THE UV VENDOR WILL VERIFY SYSTEM REQUIREMENTS FOR COMMUNICATIONS AND CHANGE DRAWINGS FOR COMMUNICATIONS REQUIREMENTS. PROVIDE I/O MAPPING FOR SCADA INTEGRATOR. INCLUDE ALL COSTS FOR FULLY OPERATIONAL SYSTEM.

GENERAL NOTE:
WASTE WATER TREATMENT PLANT MUST STAY IN OPERATION DURING ENTIRE PROJECT RENOVATION. EC SHALL CONFIRM PROPER OPERATION OF (2) NEW DISC FILTERS IN NEW EFFLUENT BLDG PRIOR TO RELOCATION OF EXIST FILTERS. EC SHALL THEN REMOVE ELECTRICAL COMPLETE FOR (3) DISC FILTERS IN EXIST UV BLDG. COORD ALL DEMOLITION AND RENOVATION W/ OWNER AND GC PRIOR TO WORK BEGINNING. EC SHALL MAKE PROVISIONS TO KEEP EXIST UV SYSTEM OPERATIONAL DURING ENTIRE PROJECT RENOVATION.

NOTES:
1. RELOCATION – REMOVE ELECTRICAL COMPLETE FOR (3) DISC FILTERS.
2. DEMOLITION – REMOVE AS REQUIRED CIRCUITRY TO EXIST ICA.
3. CONNECT AIR COMPRESSOR AND DRAIN AS REQUIRED.
4. VERIFY EXACT REQUIREMENTS AND LOCATION(S) FOR UV SYSTEM POWER. PROVIDE DISCONNECT AS REQUIRED. 600/30/3/4XSS, NON–FUSED. CIRCUITRY SHALL BE 3 #8, #8 NEUTRAL, #10 GND, 1"C.
5. MOTOR CONTROLLER, COMBINATION CIRCUIT BREAKER/DISCONNECT IN NEMA 4XSS ENCLOSURE. 600/30/3 RATED. COORD SIZE FOR EQUIPMENT.
6. 3 #10, #10 GND, 3/4"C.

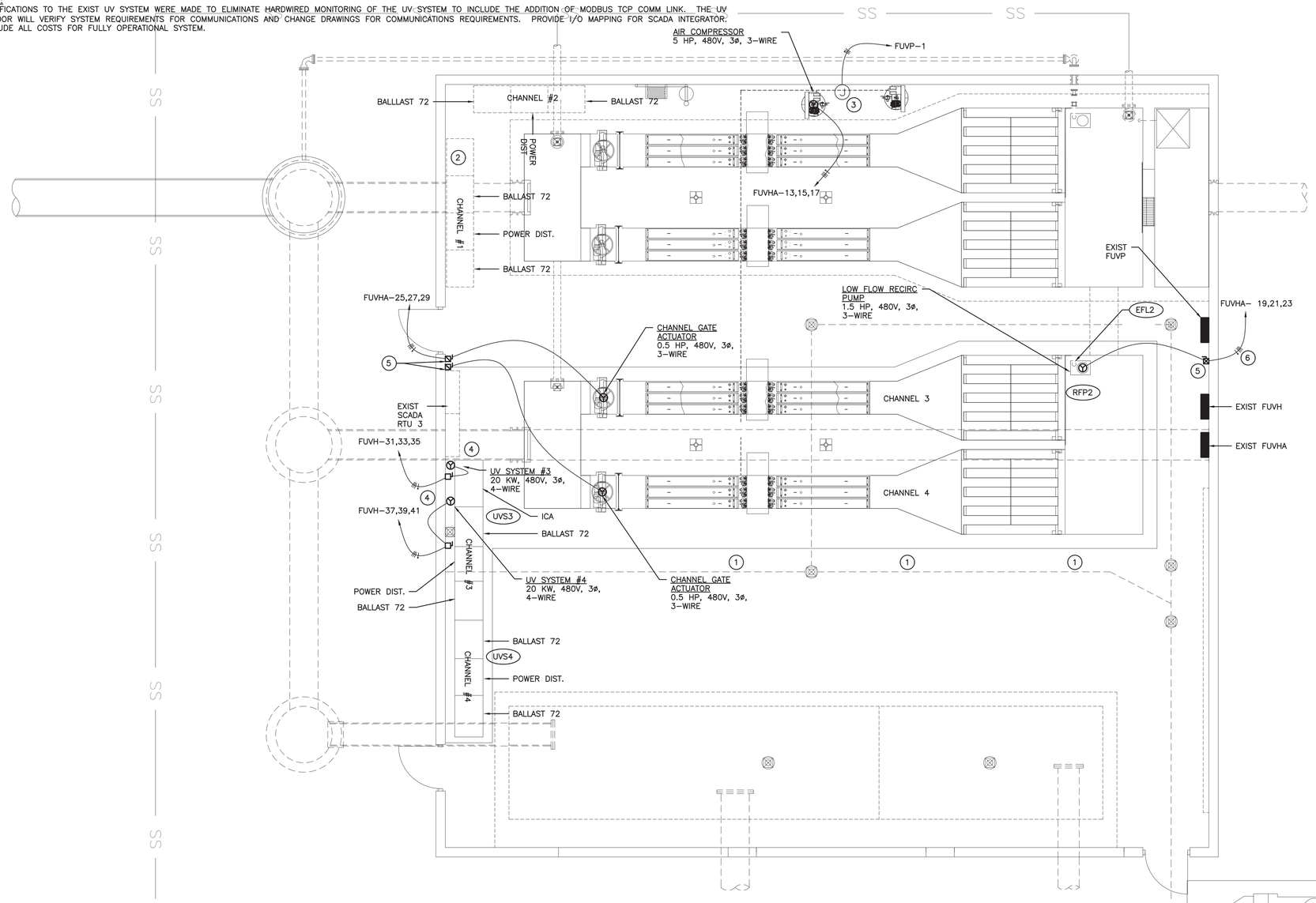

EFFLUENT
UV BLDG PLAN - POWER

SCALE: 1/4" = 1'-0"

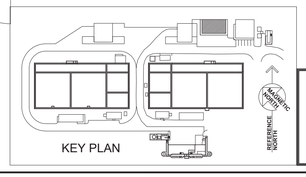

072418DR172000

BRITTAIN ENGINEERING, INC.
CONSULTING MECHANICAL AND ELECTRICAL ENGINEERS
PO BOX 939 HICKORY, NC 28603
TEL. (828) 328-1913 FAX (828) 328-1814

- NOT RELEASED FOR CONSTRUCTION

FINAL DRAWINGS

WK DICKSON
community infrastructure consultants
616 COLONNADE DRIVE
CHARLOTTE, NC 28205
(t)704-334-5348
(f)704-334-0078
WWW.WKDICKSON.COM
NC LICENSE NO.F-0374

NORTH CAROLINA PROFESSIONAL SEAL 7883 ENGINEER DANIEL DEBERTRAND 10/09/18

PROFESSIONAL SEAL

NO.	DATE	DESCRIPTION	BY
A	10/9/18	ISSUE FOR OWNER/NCDEQ REVIEW	CRF

REVISION RECORD

PROJECT NAME: KILLIAN CREEK WWTP PHASE 3 UPGRADE

DRAWING TITLE: EFFLUENT UV BUILDING ELECTRICAL

PROJ. MGR.:	CRF
DESIGN BY:	
DRAWN BY:	
PROJ. DATE:	SEPT. 2018

DRAWING NUMBER: 6-E.1

WKD PROJ. NO.: 20170294.00.CL

COPYRIGHT © 2018 DICKSON & CO., INC. ALL RIGHTS RESERVED. REPRODUCTION OR USE OF THIS CONTENT OR THE DOCUMENT, IN WHOLE OR IN PART, WITHOUT WRITTEN PERMISSION OF DICKSON & CO., INC. IS PROHIBITED. ALTERATION OF THIS DOCUMENT IS PROHIBITED. PRINT THE ORIGINAL OF THIS DOCUMENT MARKED WITH AN ORIGINAL SIGNATURE AND SEAL SHALL BE CONSIDERED TO BE VALID. FACE COPIES

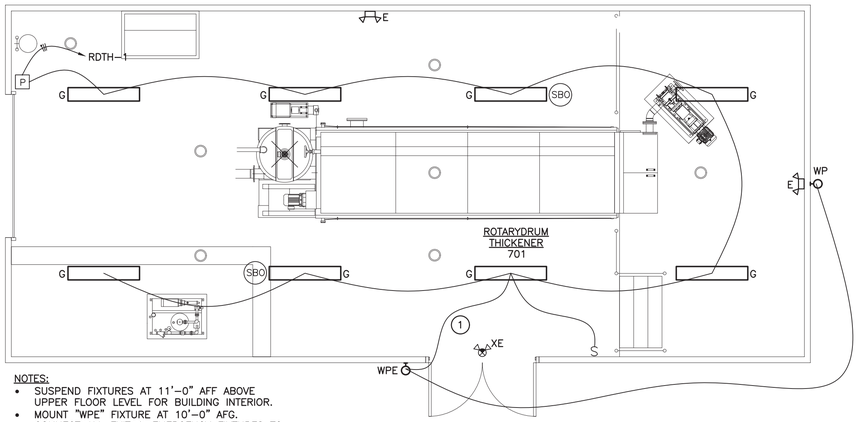

NOTES:
- SUSPEND FIXTURES AT 11'-0" AFF ABOVE UPPER FLOOR LEVEL FOR BUILDING INTERIOR.
- MOUNT "WPE" FIXTURE AT 10'-0" AFG.
- CONNECT ALL EXIT & EMERGENCY FIXTURES TO NEAREST UN-SWITCHED LIGHTING CIRCUIT.
- COORD LIGHTING FIXTURE LOCATIONS W/ OVERHEAD DOOR INSTALLER.

NOTES:
1. PROVIDE LINE VOLTAGE PHOTOCELL UN-SWITCHED TO CONTROL OUTDOOR FIXTURES. PLACE ON NORTH SIDE OF BUILDING.

ROTARY DRUM THICKNER BLDG PLAN - LIGHTING

SCALE: 1/4" = 1'-0"

ROTARY DRUM THICKNER BLDG CONTROL & INSTRUMENTATION SCHEDULE

TAG	DESCRIPTION	WIRING	CONNECT FROM	CONNECT TO	NOTES
PPC2	POLYMER PUMP CONTROL	5#14, #14 GND, 3/4"C 2#18 TSP, 3/4"C	RDTCP2	POLYMER PUMP VFD	START/RUN 4-20mA, SPEED PACING & INDICATION
PPS2	POLYMER PUMP STATUS	2#14, #14 GND, 3/4"C 2#14	POLYMER PUMP VFD	RTD CONTROL PANEL RDTCP2	SLUDGE PUMP RUN STATUS ALARM / NOT IN AUTO, LOW WATER OR POLYMER FLOW
RDTF2	ROTARY DRUM #2 THICKNER FLOW	2#18 TSP, 3/4"C	FLOW METER	RTD CONTROL PANEL RDTCP2	4-20mA, FLOW INDICATION
RDTS2	ROTARY DRUM #2 THICKNER STATUS	2#14, #14 GND, 1"C 2#14 2#14 2#14 2#14 2#14 2#14 2#14 12#14	RDTCP2	SCADA RTU 4	RDT SLUDGE PUMP P-504 RUN STATUS RDT SLUDGE PUMP P-504 FAIL INDICATION POLYMER FLOC TANK #1 DRIVE RUN STATUS POLYMER FLOC TANK DRIVE ALARM STATUS RDT DRIVE RUN STATUS, M-500 RDT DRIVE ALARM STATUS, M-500 BOOSTER PUMP P-505 RUN STATUS BOOSTER PUMP P-505 ALARM STATUS SPARES
		5#18 TSP, 1"C 2#18 TSP	RDTCP2	SCADA RTU 4	FLOW INDICATIONS SPARES
RFPCP	RDT FEED PUMP CONTROL PANEL STATUS	2#14, #14 GND, 1 1/2"C 2#14 2#14 2#14 2#14 2#14 2#14 10#14	RDT FEED PUMP CONTROL PANEL (RFPCP)	RTD CONTROL PANEL RDTCP2	PUMP - 501 RUN INDICATION PUMP - 501 FAIL INDICATION PUMP - 501 HIGH PRESSURE SHUTDOWN INDICATION PUMP - 501 HOA NOT IN AUTO POSITION PUMP - 502 RUN INDICATION PUMP - 502 FAIL INDICATION PUMP - 502 HIGH PRESSURE SHUTDOWN INDICATION PUMP - 502 HOA NOT IN AUTO POSITION SPARES
RDTL	RDT LEVEL LS-501	2#14, #14 GND, 3/4"C 1#18 TSP, 3/4"C	LEVEL TRANSMITTER	RTD CONTROL PANEL RDTCP2	4-20mA, FLOW SIGNAL
RDTPF	RDT POLYMER FLOW METER	MFG CABLE 3/4"C, #18 TSP	FLOW SENSOR	RTD CONTROL PANEL RDTCP2	4-20mA, FLOW SIGNAL

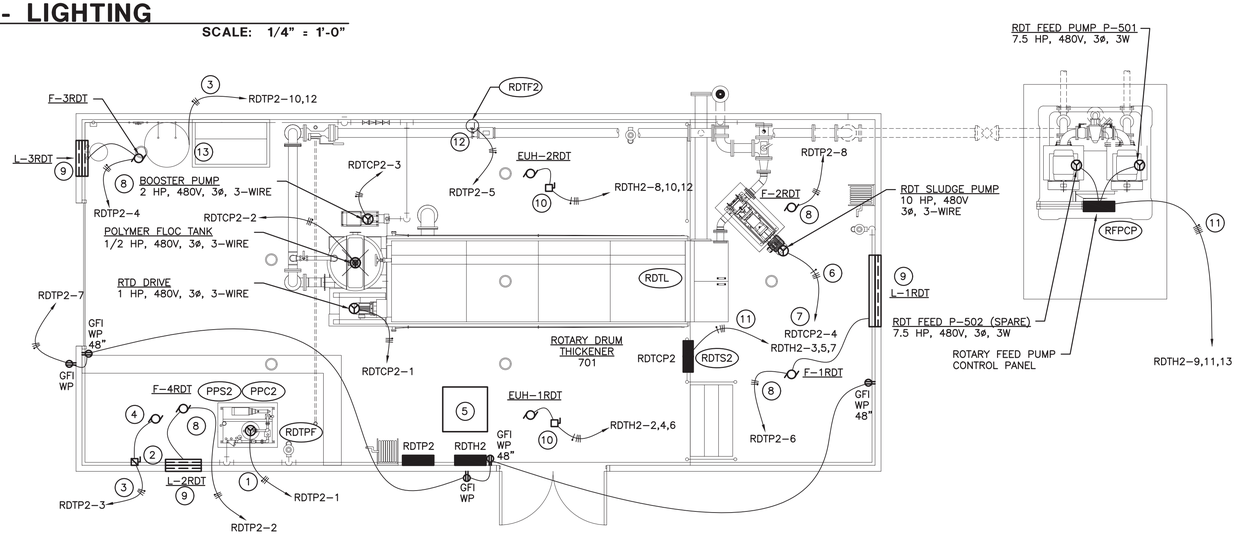

NOTES:
1. CONNECT POLYMER PUMP COMPLETE.
2. 240/30/1,4XSS FUSE FOR EQUIPMENT.
3. 2#10, #10 GND, ¾"C.
4. CONNECT SCISSOR LIFT COMPLETE.
5. SUSPEND TRANSFORMER HIGH. VERIFY CLEARANCES AND EXACT LOCATION.
6. 3 #10, #10 GND, ¾"C.
7. VFD LOCATED IN RDTCP2.
8. FAN PROVIDED WITH INTEGRAL DISCONNECT.
9. CONNECT 120V ASSOCIATED LOUVER COMPLETE TO FAN(S) UNIT POWER. PROVIDE DISCONNECT MEANS AS REQUIRED. VERIFY REQUIREMENTS. CONNECT COMPLETE.
10. 600/30/3/4XSS NON FUSED DISCONNECT.
11. 4 #6, #10 GND, 1"C.
12. CONNECT FLOW METER AS REQUIRED.
13. VERIFY THAT WATER HEATER MEETS NEC SIGHT/DISTANCE RULES OR PROVIDE 240/30/1/4XSS DISCONNECT.

ROTARY DRUM THICKENER BLDG PLAN - POWER

SCALE: 1/4" = 1'-0"

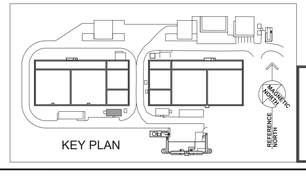

BRITTAIN ENGINEERING, INC.
CONSULTING MECHANICAL AND ELECTRICAL ENGINEERS
PO BOX 930 HICKORY, NC 28603
TEL. (828) 326-1813 FAX. (828) 326-1814

072018DR172000

WK DICKSON
community infrastructure consultants
616 COLONNADE DRIVE
CHARLOTTE, NC 28205
(t)704-334-5348
(f)704-334-0078
WWW.WKDICKSON.COM
NC LICENSE NO.F-0374

NORTH CAROLINA PROFESSIONAL SEAL 7883 ENGINEER DANIAL DISBERT TAN 10/23/18

PROFESSIONAL SEAL

FINAL DRAWINGS - NOT RELEASED FOR CONSTRUCTION

REVISION RECORD

NO.	DATE	DESCRIPTION	BY
A	10/9/18	ISSUE FOR OWNER/NCDEQ REVIEW	CRF

PROJECT NAME: KILLIAN CREEK WWTP PHASE 3 UPGRADE

DRAWING TITLE: ROTARY DRUM THICKENER BUILDING ELECTRICAL

PROJ. MGR.:	CRF
DESIGN BY:	
DRAWN BY:	
PROJ. DATE:	SEPT. 2018

DRAWING NUMBER: 7.A-E.1

WKD PROJ. NO.: 20170294.00.CL

COPYRIGHT © WK DICKSON & CO. INC. ALL RIGHTS RESERVED. REPRODUCTION OR USE OF THE CONTENTS OF THIS DOCUMENT, ADDITIONS OR ALTERATIONS TO THIS DOCUMENT, IN WHOLE OR IN PART, WITHOUT WRITTEN CONSENT OF WK DICKSON & CO. INC. IS PROHIBITED. ONLY COPIES FROM THE ORIGINAL OF THIS DOCUMENT, MARKED WITH AN ORIGINAL SIGNATURE AND SEAL SHALL BE CONSIDERED TO BE VALID, TRUE COPIES.

RENOVATED PANEL RDTP

10,000 AMPS RMS. SYM. I.C.
INTEGRATED EQUIPMENT RATING

SURFACE MOUNTED

120/208 VOLTS, 3 PHASE, 4 WIRE, 100 AMP MAIN BREAKER

SERVES	CIR LOAD	CIR NO.	A B C	CIR NO.	CIR LOAD	SERVES
EXISTING LOAD		1		2		EXISTING LOAD
SPARE		3		4		
EXISTING LOAD		5		6		
↓		7		8		↓
SPARE		9		10		SPARE
EXISTING LOAD		11		12		
↓		13		14		↓
SPARE		15		16		WATER HEATER *
↓		17	30	18		*

TOTAL CONNECTED LOAD: 13.14 KVA ALL BREAKERS ARE 1P-20A UNLESS OTHERWISE NOTED

PANEL NOTES: EXISTING PANEL LOCATED IN EXISTING RDT BLDG.
* REMOVE (2) SPARE BREAKERS AND INSTALL (1) 30A, 2-POLE BREAKER. RE-ARRANGE PANEL AND RE-LABEL AS REQUIRED

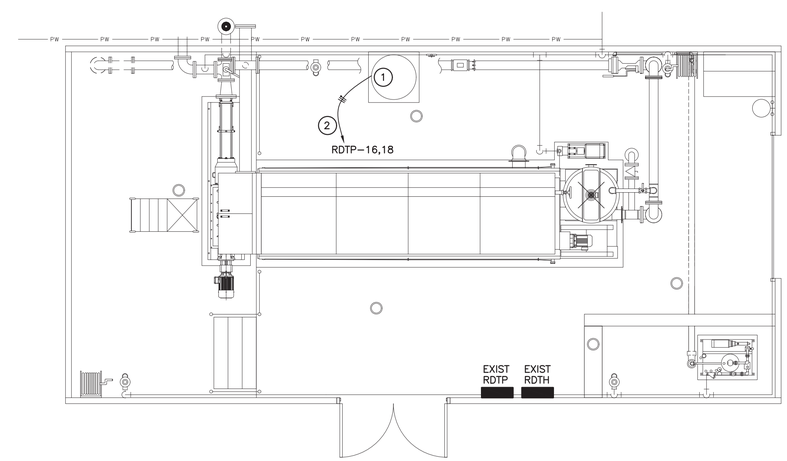

NOTES:

1. VERIFY THAT WATER HEATER MEETS NEC SIGHT/DISTANCE RULES OR PROVIDE 240/30/1/4XSS DISCONNECT.
2. 2 #10, #10 GND, ¾"C.

EXISTING ROTARY DRUM THICKENER BLDG PLAN - POWER

SCALE: 1/4" = 1'-0"

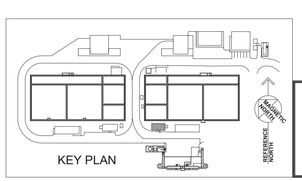

KEY PLAN

072018DR172000

BRITTAIN ENGINEERING, INC.
CONSULTING MECHANICAL AND ELECTRICAL ENGINEERS
PO BOX 939 HICKORY, NC 28603
TEL (828) 328-1813 FAX (828) 328-1814

FINAL DRAWINGS - NOT RELEASED FOR CONSTRUCTION

WK DICKSON
community infrastructure consultants
616 COLONNADE DRIVE
CHARLOTTE, NC 28205
(t)704-334-5348
(f)704-334-0078
WWW.WKDICKSON.COM
NC LICENSE NO.F-0374

NORTH CAROLINA PROFESSIONAL SEAL 7883 ENGINEER DONALD BRITTAIN 09/23/19

PROFESSIONAL SEAL

REVISION RECORD

NO.	DATE	DESCRIPTION	BY
A	10/9/18	ISSUE FOR OWNER/NCDEQ REVIEW	CRF

PROJECT NAME: KILLIAN CREEK WWTP PHASE 3 UPGRADE

DRAWING TITLE: EXISTING ROTARY DRUM THICKENER BUILDING ELECTRICAL

PROJ. MGR.:	CRF
DESIGN BY:	
DRAWN BY:	
PROJ. DATE:	SEPT. 2018
DRAWING NUMBER:	7-E.1
WKD PROJ. NO.:	20170294.00.CL

COPYRIGHT © 2012 DICKSON & CO., INC. ALL RIGHTS RESERVED. REPRODUCTION OR USE OF THIS CONTENT OF THIS DOCUMENT, ADDITIONS OR CHANGES TO THIS DOCUMENT WITHOUT WRITTEN PERMISSION IS PROHIBITED. ALL REPRODUCTIONS OF THIS DOCUMENT MUST INCLUDE THIS COPYRIGHT NOTICE. PRINTS OR COPIES OF THIS DOCUMENT MARKED WITH AN ORIGINAL SIGNATURE AND SEAL SHALL BE CONSIDERED TO BE VALID, TRUE COPIES

NOTES:

1. PROVIDE LINE VOLTAGE PHOTOCELL TO CONTROL NORMAL OPERATION OF WALL PACK FIXTURES. PLACE ON NORTH SIDE OF BUILDING.

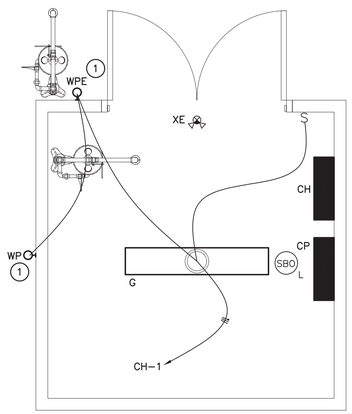

CHEMICAL FEED BLDG PLAN - LIGHTING

SCALE: 1/2" = 1'-0"

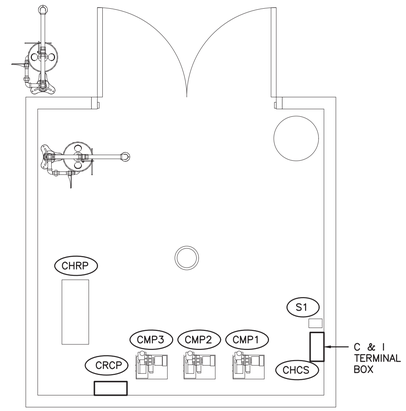

CHEMICAL FEED BLDG INSTRUMENTATION & CONTROL

SCALE: 1/2" = 1'-0"

CHEMICAL FEED BLDG CONTROL & INSTRUMENTATION SCHEDULE

TAG	DESCRIPTION	WIRING	CONNECT FROM	CONNECT TO	NOTES
CHRP	CHEMICAL RECIRCULATION PUMP P-700	2#14, #14 GND, 3/4"C 2#14 6#14	CHEMICAL RECIRCULATION PUMP	CHEMICAL ROOM C & I TERMINAL BOX THROUGH H-O-R SELECTOR	RUN INDICATION FAIL INDICATION SPARES
CMP1	CHEMICAL METERING PUMP P-701	3#14, #14 GND, 3/4"C 2#14 2#14 2#14	CHEMICAL METERING PUMP 701	CHEMICAL ROOM CONTROL PANEL CRCP	REMOTE PUMP RUN COMMAND RUN INDICATION FAIL INDICATION SPARES
CMP2	CHEMICAL METERING PUMP P-702	3#14, #14 GND, 3/4"C 2#14 2#14 2#14	CHEMICAL METERING PUMP 702	CHEMICAL ROOM CONTROL PANEL CRCP	REMOTE PUMP RUN COMMAND RUN INDICATION FAIL INDICATION SPARES
CMP3	CHEMICAL METERING PUMP P-703	3#14, #14 GND, 3/4"C 2#14 2#14 2#14	CHEMICAL METERING PUMP 703	CHEMICAL ROOM CONTROL PANEL CRCP	REMOTE PUMP RUN COMMAND RUN INDICATION FAIL INDICATION SPARES
PCPS	CHEMICAL ROOM CONTROL PANEL STATUS / CONTROL	7#14, #14 GND, 1 1/2"C 7#14 7#14 9#14	CHEMICAL ROOM CONTROL PANEL CRCP	CHEMICAL ROOM C & I TERMINAL BOX	PUMP 701 STATUS PUMP 702 STATUS PUMP 703 STATUS SPARES
		3/4"#18 TSP #18 TSP	CHEMICAL POLYMER CONTROL PANEL CRCP	CHEMICAL ROOM C & I TERMINAL BOX	4-20 mA, CONTROL SIGNAL FROM FLOW SENSOR LOCATED IN PARSHALL FLUME SPARES
S1	SOLENOID VALVE #1	3#14, #14 GND, 3/4"C #18 TSP, 3/4"	CHEMICAL POLYMER CONTROL PANEL CRCP	SOLENOID VALVE S1 METERING	OPEN/CLOSE COMMAND 4-20 mA
CHCS	CHEMICAL ROOM CONTROL/STATUS	4#14, #14 GND, 1 1/4"C 7#14 7#14 7#14 4#14 20#14	CHEMICAL C & I TERMINAL BOX	RTU #1 (EXISTING BLOWER BLDG.)	CHEMICAL RECIRC PUMP CHEM PUMP 701 CHEM PUMP 702 CHEM PUMP 703 SOLENOID S1 SPARES
		1"C, #18 TSP 2#18 TSP 4#18 TSP			4-20mA CHEM TANK LEVEL 4-20mA INFLUENT FLOW METER (INFL) SPARES

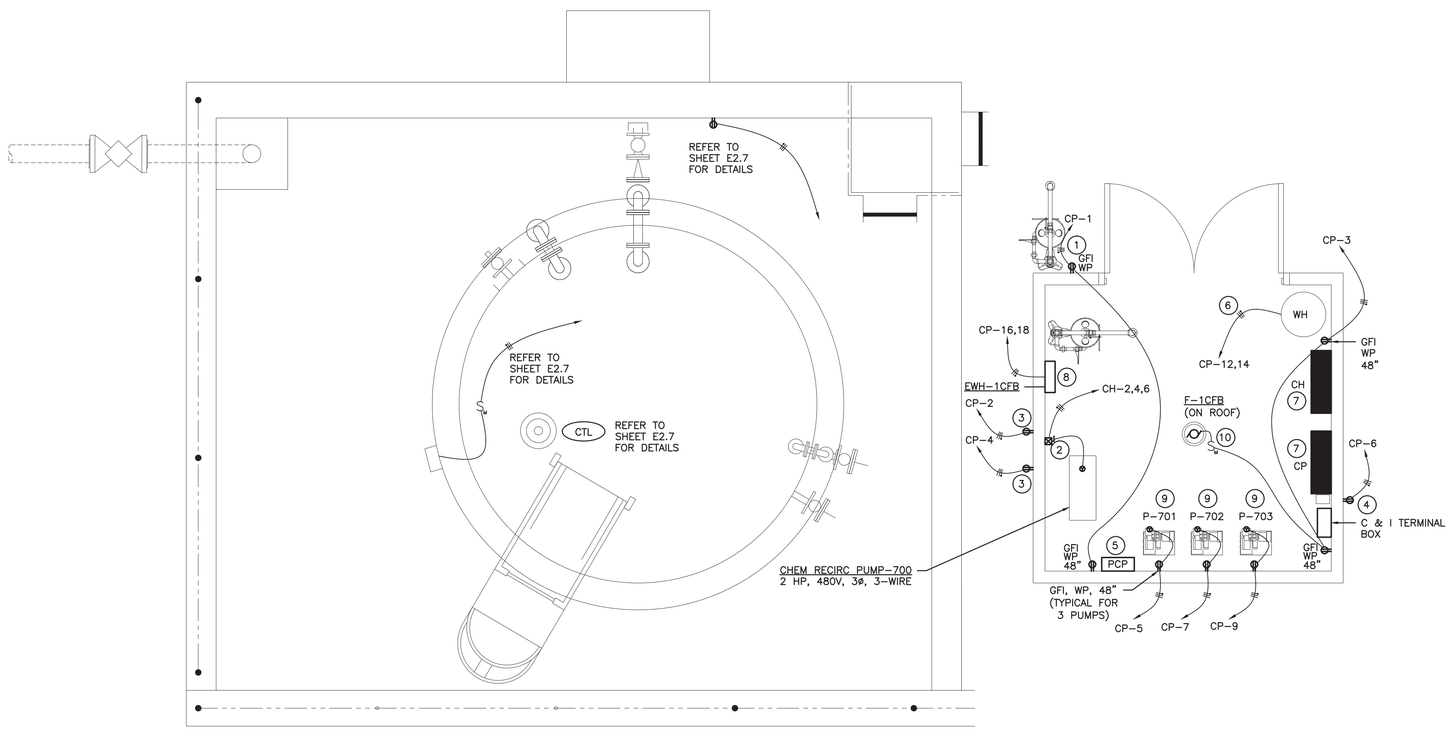

CHEMICAL FEED BLDG PLAN - POWER

SCALE: 1/2" = 1'-0"

POWER NOTES:

1. PROVIDE HEAVY DUTY WHILE-IN-USE COVER.
2. MOTOR CONTROLLER HAND-OFF-REMOTE, COMBINATION DISCONNECT, MOTOR STARTER OR VFD. PROVIDE OVERLOAD RATING BASED ON EQUIPMENT RATING BEING SERVED. PROVIDE NEMA 4XSS ENCLOSURE.
3. PROVIDE HEAT TRACE AND POWER AS REQUIRED FOR (1) 3" AND (1) 2" LINES TO CHEMICAL STORAGE TANK.
4. PROVIDE HEAT TRACE AND POWER AS REQUIRED FOR (1) 1" CHEMICAL FEED LINE TO FLOW SPLITTER.
5. VERIFY POLYMER CONTROL PANEL (PCP) LOCATION PRIOR TO ROUGH IN. PROVIDE POWER TO PANEL AS REQUIRED
6. 2 #10, #10 GND, ¾"C.
7. VERIFY EXACT LOCATION PRIOR TO ROUGH-IN. RELOCATE AS REQUIRED TO MEET ALL NEC CLEARANCE REQUIREMENTS.
8. CONNECT WALL HEATER COMPLETE. VERIFY EXACT LOCATION.
9. VERIFY REQUIREMENTS FOR PUMPS. MAKE CHANGES AS REQUIRED AND CONNECT COMPLETE. INCLUDE CONDUITS AND CONDUCTORS AS REQUIRED FOR CONTROLS.
10. 1 POLE, 15 AMP MOTOR RATED SWITCH.

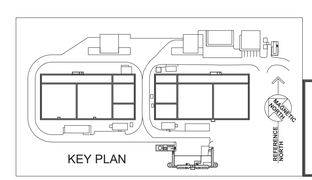

KEY PLAN

072418DR172000

BRITTAIN ENGINEERING, INC.
CONSULTING MECHANICAL AND ELECTRICAL ENGINEERS
PO BOX 939 HICKORY, NC 28603
TEL. (828) 328-1813 FAX. (828) 328-1814

FINAL DRAWINGS - NOT RELEASED FOR CONSTRUCTION

WK DICKSON
community infrastructure consultants
616 COLONNADE DRIVE
CHARLOTTE, NC 28205
(t)704-334-5348
(f)704-334-0078
WWW.WKDICKSON.COM
NC LICENSE NO.F-0374

NORTH CAROLINA PROFESSIONAL SEAL 7883 ENGINEER DANIEL P. BERTRAM 10/23/18

PROFESSIONAL SEAL

REVISION RECORD

NO.	DATE	DESCRIPTION	BY
A	10/9/18	ISSUE FOR OWNER/NCDEQ REVIEW	CRF

PROJECT NAME: KILLIAN CREEK WWTP PHASE 3 UPGRADE

DRAWING TITLE: CHEMICAL FEED BLDG ELECTRICAL

PROJ. MGR.:	CRF
DESIGN BY:	
DRAWN BY:	
PROJ. DATE:	SEPT. 2018
DRAWING NUMBER:	8-E.1
WKD PROJ. NO.:	20170294.00.CL

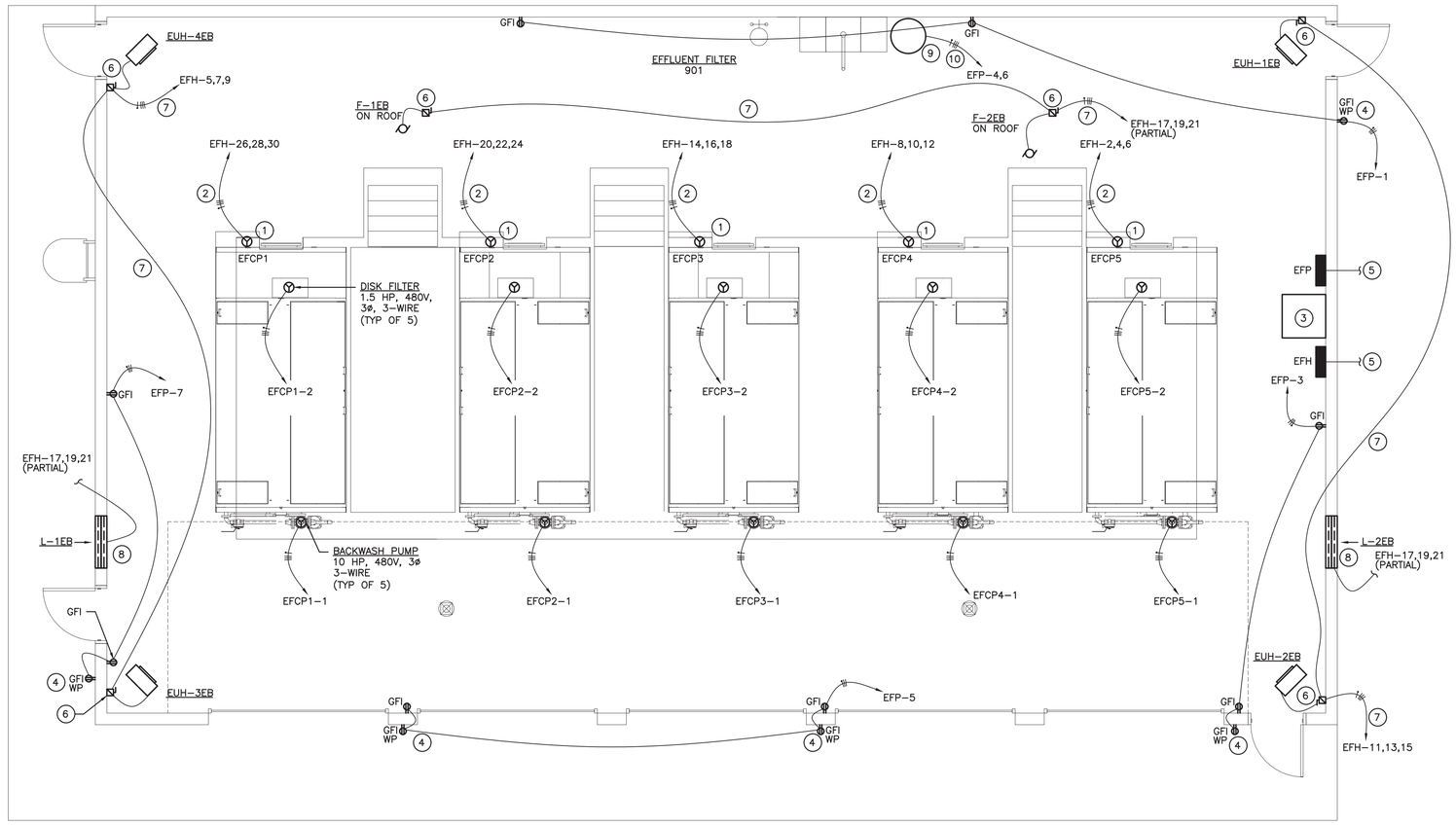

GENERAL NOTE:
WASTE WATER TREATMENT PLANT MUST STAY IN OPERATION DURING ENTIRE PROJECT RENOVATION. NEW DISC FILTERS #4 & #5 ARE TO BE INSTALLED AND FULLY OPERATIONAL PRIOR TO EXIST DISC FILTERS #1-3 BEING RELOCATED FROM THE EXIST EFFLUENT/UV BLDG. EC SHALL MAKE ALL NECESSARY TEMPORARY/FINAL CONNECTIONS AS REQUIRED TO PROVIDE FULL PLANT OPERATIONS. PROVIDE ALL TEMPORARY EQUIPMENT, CONDUITS, CIRCUITS AND LABOR AS REQUIRED.

NOTES:

1. VERIFY EFFLUENT FILTER CONTROL PANEL LOCATION FOR EACH DISC FILTER PRIOR TO ROUGH-IN.
2. 3 #8, #8 GND, ¾"C.
3. SUSPEND TRANSFORMER HIGH. VERIFY CLEARANCES AND EXACT LOCATION.
4. PROVIDE HEAVY DUTY WHILE-IN-USE COVER.
5. (2) 1" CONDUITS FOR SPARES. STUB OUT TO 60" FROM BLDG FOUNDATION. PROVIDE PULL STRINGS AND CAPS.
6. 600/30/3/4XSS, FUSE FOR EQUIPMENT.
7. 3 #10, #10 GND, ¾"C.
8. INTERCONNECT W/ FAN AS REQUIRED. PROVIDE DISCONNECT MEANS.
9. VERIFY THAT WATER HEATER MEETS NEC SIGHT/DISTANCE REQUIREMENTS OR PROVIDE 240/30/1/4XSS DISCONNECT.
10. 2 #10, #10 GND, ¾"C.

EFFLUENT FILTER
BLDG PLAN - POWER

SCALE: 1/4" = 1'-0"

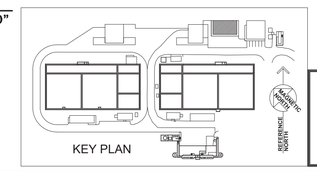

KEY PLAN

072418DR172000

BRITTAIN ENGINEERING, INC.
CONSULTING MECHANICAL AND ELECTRICAL ENGINEERS
PO BOX 939 HICKORY, NC 28603
TEL (828) 328-1813 FAX (828) 328-1814

FINAL DRAWINGS - NOT RELEASED FOR CONSTRUCTION

WK DICKSON
community infrastructure consultants
616 COLONNADE DRIVE
CHARLOTTE, NC 28205
(t)704-334-5348
(f)704-334-0078
WWW.WKDICKSON.COM
NC LICENSE NO.F-0374

NORTH CAROLINA PROFESSIONAL SEAL 7883 ENGINEER DONALD P. BRITTAIN 08/23/19
PROFESSIONAL SEAL

REVISION RECORD

NO.	DATE	DESCRIPTION	BY
A	10/9/18	ISSUE FOR OWNER/NCDEQ REVIEW	CRF

PROJECT NAME: KILLIAN CREEK WWTP PHASE 3 UPGRADE

DRAWING TITLE: EFFLUENT FILTER BUILDING POWER

PROJ. MGR.:	CRF
DESIGN BY:	
DRAWN BY:	
PROJ. DATE:	SEPT. 2018
DRAWING NUMBER:	9-E.1
WKD PROJ. NO.:	20170294.00.CL

COPYRIGHT © WK DICKSON & CO. INC. ALL RIGHTS RESERVED. REPRODUCTION OR USE OF THE CONTENTS OF THIS DOCUMENT, ADDITIONS OR ALTERATIONS TO THIS DOCUMENT, IN WHOLE OR IN PART, WITHOUT WRITTEN CONSENT OF WK DICKSON & CO. INC. IS PROHIBITED. ANY OTHER PRINT OR DRAWING OF THIS DOCUMENT, MARKED WITH AN ORIGINAL SIGNATURE AND SEAL SHALL BE CONSIDERED TO BE VALID. TRUE COPIES.

COPYRIGHT © WK DICKSON & CO., INC. ALL RIGHTS RESERVED. REPRODUCTION OR USE OF THE CONTENTS OF THIS DOCUMENT, ADDITIONS OR DELETIONS TO THIS DOCUMENT, IN WHOLE OR IN PART, WITHOUT WRITTEN CONSENT OF WK DICKSON & CO., INC., IS PROHIBITED. ONLY COPIES FROM THE ORIGINAL OF THIS DOCUMENT, MARKED WITH AN ORIGINAL SIGNATURE AND SEAL SHALL BE CONSIDERED TO BE VALID, TRUE COPIES.

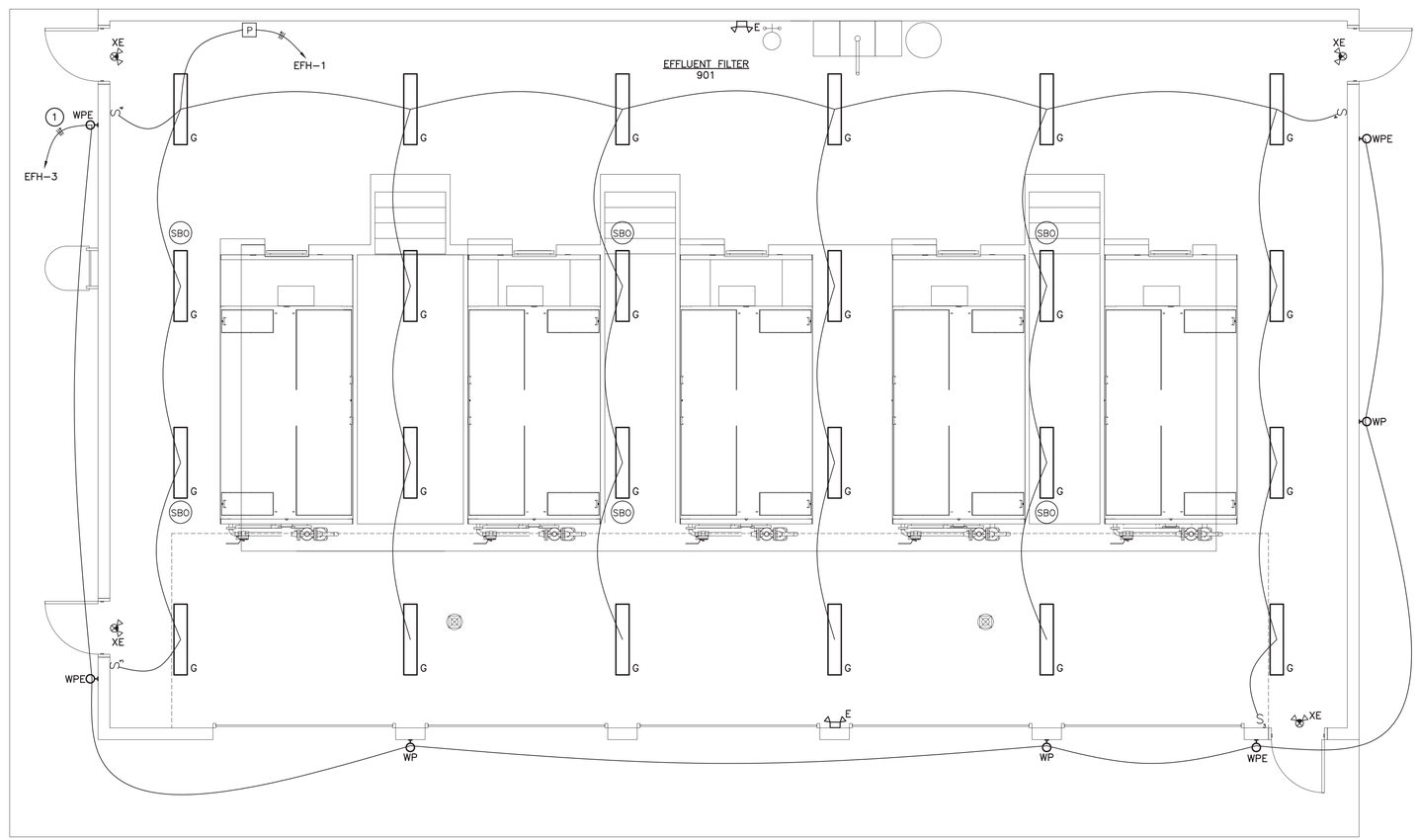

NOTES:
- SUSPEND FIXTURES AT 17'-0" AFF FOR BUILDING INTERIOR.
- VERIFY FIXTURE LOCATION W/ GC FOR OVERHEAD DOORS AND DOOR INSTALLER.
- CONNECT ALL EXIT & EMERGENCY FIXTURES TO NEAREST UN-SWITCHED LIGHTING CIRCUIT.

NOTES:
1. PROVIDE LINE VOLTAGE PHOTOCELL. PLACE ON NORTH SIDE OF BUILDING.

EFFLUENT UV
BLDG PLAN - LIGHTING

SCALE: 1/4" = 1'-0"

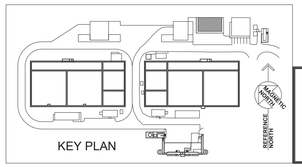

KEY PLAN

071618DR172000

BRITTAIN ENGINEERING, INC.
CONSULTING MECHANICAL AND ELECTRICAL ENGINEERS
PO BOX 939 HICKORY, NC 28603
TEL. (828) 328-1813 FAX. (828) 328-1814

FINAL DRAWINGS - NOT RELEASED FOR CONSTRUCTION

WK DICKSON
community infrastructure consultants
616 COLONNADE DRIVE
CHARLOTTE, NC 28205
(t)704-334-5348
(f)704-334-0078
WWW.WKDICKSON.COM
NC LICENSE NO.F-0374

NORTH CAROLINA PROFESSIONAL SEAL 7883 ENGINEER DONALD PERRITTAIN 09/23/19

PROFESSIONAL SEAL

REVISION RECORD

NO.	DATE	DESCRIPTION	BY
A	10/9/18	ISSUE FOR OWNER/NCDEQ REVIEW	CRF

PROJECT NAME: KILLIAN CREEK WWTP PHASE 3 UPGRADE

DRAWING TITLE: EFFLUENT UV BUILDING LIGHTING

PROJ. MGR.:	CRF
DESIGN BY:	
DRAWN BY:	
PROJ. DATE:	SEPT. 2018
DRAWING NUMBER:	9-E.2
WKD PROJ. NO.:	20170294.00.CL

COPYRIGHT © 2018 DICKSON & CO., INC. ALL RIGHTS RESERVED. REPRODUCTION OR USE OF THIS CONTENT OR THE DOCUMENT, IN WHOLE OR IN PART, WITHOUT WRITTEN PERMISSION OF DICKSON & CO., INC. IS PROHIBITED. ADDITIONS OR CHANGES TO THIS DOCUMENT ARE PROHIBITED EXCEPT AS AUTHORIZED BY DICKSON & CO., INC. PRINTS THE UNMARKED OR THIS DOCUMENT MARKED WITH A FACSIMILE SIGNATURE AND SEAL SHALL BE CONSIDERED TO BE VALID, TRUE COPIES.

EFFLUENT FILTER BLDG CONTROL & INSTRUMENTATION SCHEDULE

TAG	DESCRIPTION	WIRING	CONNECT FROM	CONNECT TO	NOTES
DFS1	DISC FILTER 1 STATUS (DF-1)	2#14, #14 GND, 3/4"C 2#14 2#14 2#14 2#14 2#14 2#14 2#14 4#14	EFFLUENT FILTER CONTROL PANEL EFCP5 (CP-5)	SCADA RTU 3 (LOCATED IN UV BLDG)	DISC FILTER DF-1 DRIVE RUN STATUS DISC FILTER DF-1 DRIVE FAILURE INDICATION BACKWASH PUMP P-9 RUN STATUS BACKWASH PUMP P-9 FAILURE INDICATION BACKWASH PUMP P-9 AUTO STATUS DRIVE AUTO STATUS DISC FILTER HIGH LEVEL LS-7 DISC FILTER HIGH-HIGH LEVEL SPARES
		3/4"C, #18 TSP			4-20mA, WATER LEVEL IN FILTER
DFS2	DISC FILTER 2 STATUS (DF-2)	2#14, #14 GND, 3/4"C 2#14 2#14 2#14 2#14 2#14 2#14 2#14 4#14	EFFLUENT FILTER CONTROL PANEL EFCP6 (CP-6)	SCADA RTU 3 (LOCATED IN UV BLDG)	DISC FILTER DF-2 DRIVE RUN STATUS DISC FILTER DF-2 DRIVE FAILURE INDICATION BACKWASH PUMP P-10 RUN STATUS BACKWASH PUMP P-10 FAILURE INDICATION BACKWASH PUMP P-10 AUTO STATUS DRIVE AUTO STATUS DISC FILTER HIGH LEVEL LS-8 DISC FILTER HIGH-HIGH LEVEL SPARES
		3/4"C, #18 TSP			4-20mA, WATER LEVEL IN FILTER
DFS3	DISC FILTER 3 STATUS (DF-3)	2#14, #14 GND, 3/4"C 2#14 2#14 2#14 2#14 2#14 2#14 2#14 4#14	EFFLUENT FILTER CONTROL PANEL EFCP7 (CP-7)	SCADA RTU 3 (LOCATED IN UV BLDG)	DISC FILTER DF-3DRIVE RUN STATUS DISC FILTER DF-3 DRIVE FAILURE INDICATION BACKWASH PUMP P-11 RUN STATUS BACKWASH PUMP P-11 FAILURE INDICATION BACKWASH PUMP P-11 AUTO STATUS DRIVE AUTO STATUS DISC FILTER HIGH LEVEL LS-9 DISC FILTER HIGH-HIGH LEVEL SPARES
		3/4"C, #18 TSP			4-20mA, WATER LEVEL IN FILTER
DFS4	DISC FILTER 4 STATUS (DF-4)	2#14, #14 GND, 3/4"C 2#14 2#14 2#14 2#14 2#14 2#14 2#14 4#14	EFFLUENT FILTER CONTROL PANEL EFCP8 (CP-8)	SCADA RTU 3 (LOCATED IN UV BLDG)	DISC FILTER DF-4 DRIVE RUN STATUS DISC FILTER DF-4 DRIVE FAILURE INDICATION BACKWASH PUMP P-301 RUN STATUS BACKWASH PUMP P-301 FAILURE INDICATION BACKWASH PUMP P-310 AUTO STATUS DRIVE AUTO STATUS DISC FILTER HIGH LEVEL LS-301 DISC FILTER HIGH-HIGH LEVEL SPARES
		3/4"C, #18 TSP			4-20mA, WATER LEVEL IN FILTER
DFS5	DISC FILTER 5 STATUS (DF-5)	2#14, #14 GND, 3/4"C 2#14 2#14 2#14 2#14 2#14 2#14 2#14 4#14	EFFLUENT FILTER CONTROL PANEL EFCP9 (CP-9)	SCADA RTU 3 (LOCATED IN UV BLDG)	DISC FILTER D-5 DRIVE RUN STATUS DISC FILTER D-5 DRIVE FAILURE INDICATION BACKWASH PUMP P-302 RUN STATUS BACKWASH PUMP P-302 FAILURE INDICATION BACKWASH PUMP P-302 AUTO STATUS DRIVE AUTO STATUS DISC FILTER HIGH LEVEL LS-302 DISC FILTER HIGH-HIGH LEVEL SPARES
		3/4"C, #18 TSP			4-20mA, WATER LEVEL IN FILTER

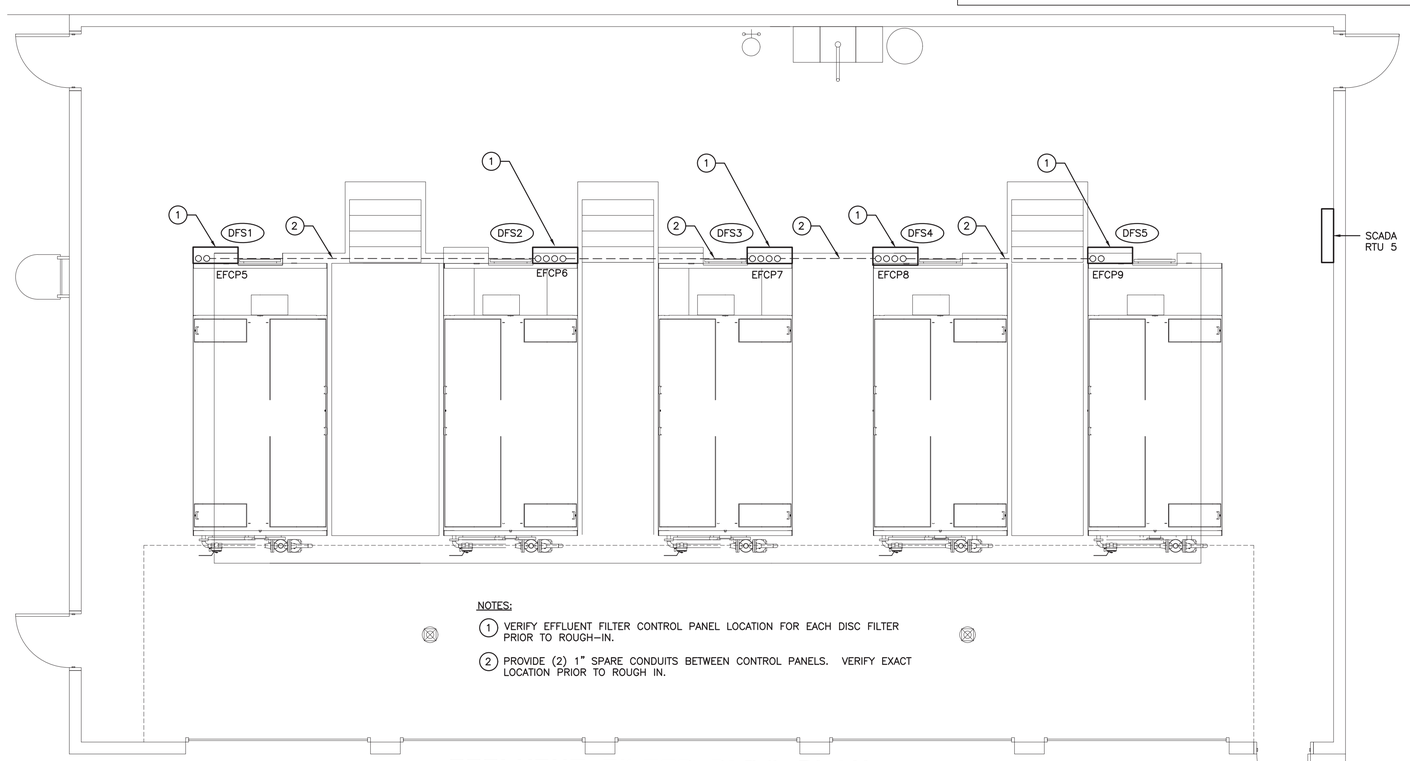

NOTES:

1. VERIFY EFFLUENT FILTER CONTROL PANEL LOCATION FOR EACH DISC FILTER PRIOR TO ROUGH-IN.
2. PROVIDE (2) 1" SPARE CONDUITS BETWEEN CONTROL PANELS. VERIFY EXACT LOCATION PRIOR TO ROUGH IN.

EFFLUENT FILTER BLDG PLAN INSTRUMENTATION & CONTROL

SCALE: 1/4" = 1'-0"

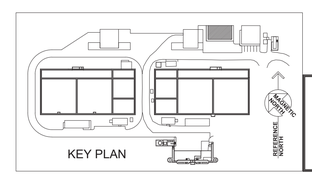

071618DR172000

BRITTAIN ENGINEERING, INC.
CONSULTING MECHANICAL AND ELECTRICAL ENGINEERS
PO BOX 939 HICKORY, NC 28603
TEL. (828) 328-1813 FAX. (828) 328-1814

FINAL DRAWINGS - NOT RELEASED FOR CONSTRUCTION

WK DICKSON
community infrastructure consultants
616 COLONNADE DRIVE
CHARLOTTE, NC 28205
(t)704-334-5348
(f)704-334-0078
WWW.WKDICKSON.COM
NC LICENSE NO.F-0374

NORTH CAROLINA PROFESSIONAL SEAL 7883 ENGINEER DANIAL DISBERT TATE 10/23/18

PROFESSIONAL SEAL

REVISION RECORD

NO.	DATE	DESCRIPTION	BY
A	10/9/18	ISSUE FOR OWNER/NCDEQ REVIEW	CRF

PROJECT NAME: KILLIAN CREEK WWTP PHASE 3 UPGRADE

DRAWING TITLE: EFFLUENT FILTER BUILDING INSTRUMENTATION & CONTOL

PROJ. MGR.:	CRF
DESIGN BY:	
DRAWN BY:	
PROJ. DATE:	SEPT. 2018
DRAWING NUMBER:	9-E.3
WKD PROJ. NO.:	20170294.00.CL