WHITE BACKGROUND BLACK LETTERS

CONTROL PANEL
*
SUPPLY XXX VOLTS: **
Disconnect Current Rating: _____
XXXXXXXXXXXXXXXX
Drawing No. _____ ***
Built By: ****
Equipment Model No. ****
Equipment Serial No. ****
OKC. Contract ****
Date of Manufacture ****

PANEL TAG

NOTE:
1. * = PANEL NAME
2. ** = MCC & BUCKET OR LIGHTING PANEL & CIRCUIT NUMBER
3. *** = DRAWING NUMBER
4. **** = MANUFACTURER, MODEL #, SERIAL #, CONTACT INFO. & DATE.

YELLOW BACKGROUND
BLACK LETTERS

DANGER

YELLOW WIRING
IS NOT
DE-ENERGIZED
BY DISCONNECT

AUTHORIZED
PERSONNEL ONLY
ALLOWED TO ENTER

YELLOW WIRING PANEL TAG

NOTE:
1. TO BE USED WHEN PANEL HAS FOREIGN POWER (CIRCUITS THAT DO NOT DE-ENERGIZE WHEN DISCONNECT OF MAIN CIRCUIT BREAKER IS TURNED OFF). EXAMPLE IS WHEN THE MCC POWERS THE START CONTACT TO A PLC PANEL.

ORANGE WITH BLACK LETTERING

WARNING

Arc Flash and Shock Hazard

Appropriate PPE Required

76.2 millimeters	Flash Hazard Boundry
0.08 cal/cm^2	Flash Hazard at 18 inches
Category 0	Untreated Cotton
480 VAC	Shock Hazard when cover is removed
00	Clove Class
107 centimeters	Limited Approach
30.5 centimeters	Restricted Approach
2.54 centimeters	Prohibited Approach

Location: EUH-1

WHITE WITH BLACK LETTERING

ORANGE WITH BLACK LETTERING

ARC FLASH PLACARD

NOTES:
1. **CONTRACTOR TO PROVIDE AND IMPLEMENT COORDINATION STUDY RESULTS.**
2. **STUDY TO INCLUDE**
   - 2.1. **LOW VOLTAGE (BELOW 600VAC)**
   - 2.2. **COMPUTER MODEL**
   - 2.3. **SHORT CIRCUIT STUDY**
   - 2.4. **PROTECTIVE DEVICE COORDINATION STUDY**
   - 2.5. **ARC FLASH LEVELS, PPE LEVELS, DISTANCE NUMBERS**
3. **CONTRACTOR TO PROVIDE ARC FLASH PLACARD, LOCKOUT/TAGOUT PLACARD**
4. **CONTRACTOR TO PLACARD ALL CONTROL PANELS, POWER PANELS, MCC BUCKETS, DISCONNECTS, LIGHTING PANELS, AND TERMINATION PANELS INSTALLED OR CONNECTED TO DURING THIS PROJECT.**

ORANGE WITH BLACK LETTERING

Less than 50 volts
No Arc Flash Hazard
No Shock Hazard Boundary
No Electrical PPE Required

Brady PN: 110170

UNDER 50 VOLTS PLACARD

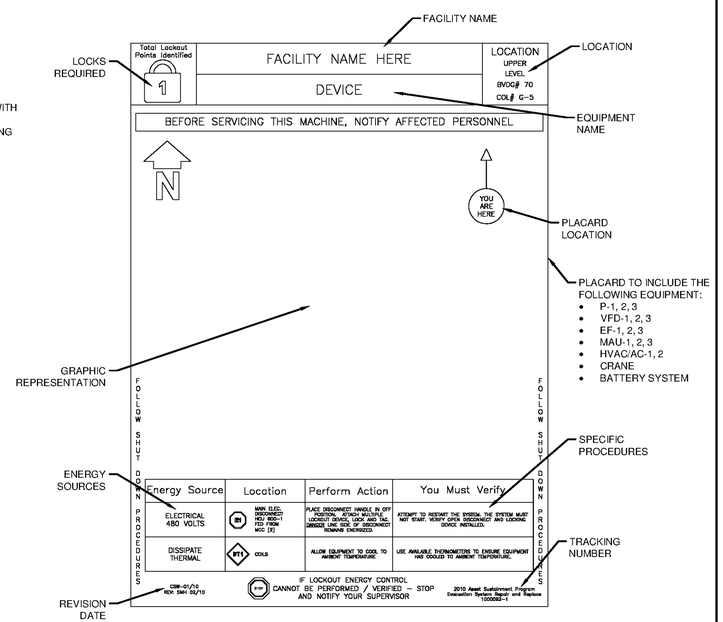

LOCKOUT / TAGOUT PLACARD

NOTE:
1. CONTRACTOR TO SUBMIT PLACARDS TO OWNER FOR REVIEW.
2. PLACARD PRINTED IN COLOR ON 9.1KG (20LB) CARD STOCK.
3. PLACARD LAMINATED WITH 10 MM LAMINATION AND PLACED IN DOCUMENT HOLDER.
4. DOCUMENT HOLDER ATTACHED TO PIECE OF EQUIPMENT.
5. CONTRACTOR TO DEMONSTRATE PROCEDURE TO OWNER. AFTER INSTRUCTION UPDATE PLACARD WITH RECOMMENDATIONS.
6. PLACARD ELECTRONIC FILE TO BE GIVEN TO OWNER.

SAFETY/PLACARD DETAIL

NO SCALE

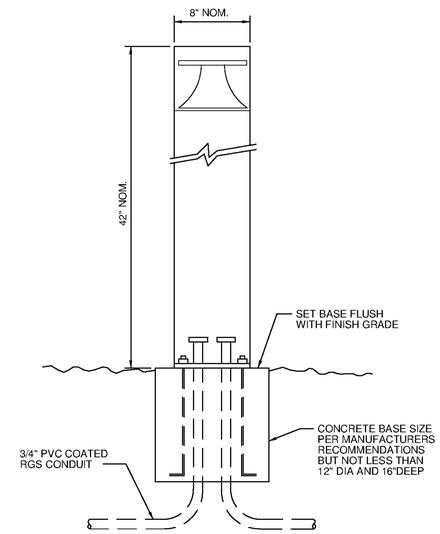

L16 NO SCALE

BOLLARD MOUNTING DETAIL

NO SCALE

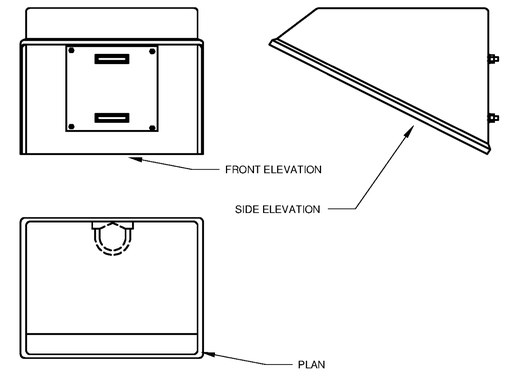

NOTES
1. GLASS REINFORCED POLYESTER DOUGH MOLDING COMPOUND RIGID CONSTRUCTION.
2. STANDARD COLOR: WHITE.
3. TYPE 316 SST FASTENER AND FITTINGS.
4. SUITABLE FOR ENVIRONMENTS FROM -17.4°C TO 80°C (-94°F TO +176°F).
5. NON CORROSIVE AND UV RESISTANT.
6. CARBON STEEL BACK PLATE AND BRACKET WITH EPOXY COATING.
7. FIRE RETARDANT.

INSTRUMENT SUNSHADE DETAIL

NO SCALE

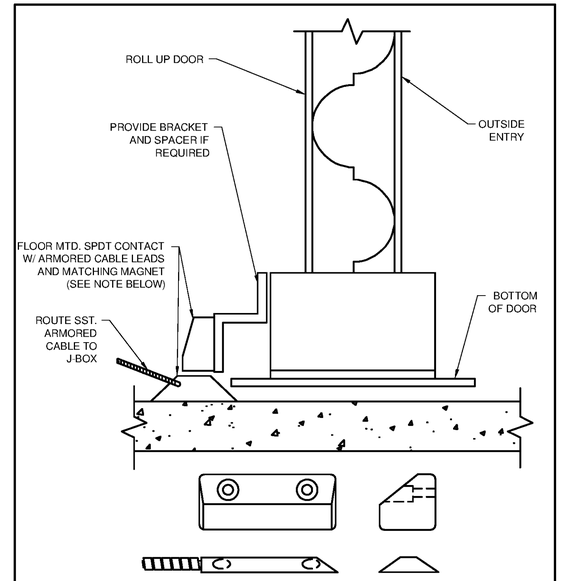

NOTES:
1. GAP SIZE: 7.62CM (3")
2. LEAD TYPE: 91.4CM (3 FOOT) STAINLESS STEEL ARMORED CABLE.
3. SWITCH: 120VAC, 3 AMP SPDT
4. SWITCH ACTIVATES WHEN DOOR OPENS.
5. PROVIDE PROPER GAP PER MANUFACTURER'S SPECIFICATIONS

FLOOR MOUNTING CONTACT EXTRA HEAVY DUTY DETAIL

NO SCALE

TETRA TECH
www.tetratech.com
101 QUALITY CIRCLE, SUITE 140
HUNTSVILLE, ALABAMA 35806
PHONE: (256) 424-4077 FAX: (256) 424-4097

BID SET

ALABAMA LICENSED No. 21938 PROFESSIONAL ENGINEER ANDREW SUMNER

MARK	DATE	DESCRIPTION	BY

HUNTSVILLE UTILITIES
SOUTHEAST WATER TREATMENT PLANT
SAFETY & SECURITY DETAILS

Project No.:	200-11740-10003
Designed By:	CSW
Drawn By:	CSW
Checked By:	DAB

E-9514

Copyright: Tetra Tech

Bar Measures 1 inch

10/17/2014 11:06:46 AM P:\IER\11740\200-11740-10003\CAD\SHEETFILES\TREATMENT PLANT\WTP-E-9514 SAFETY & SECURITY DETAILS.DWG - CALZARETTA, TIMOTHY