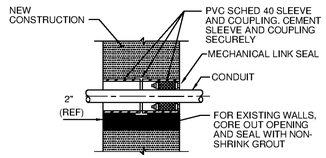

EXTERIOR WALL CONDUIT SLEEVE DETAIL

NO SCALE DO NOT USE BELOW GRADE

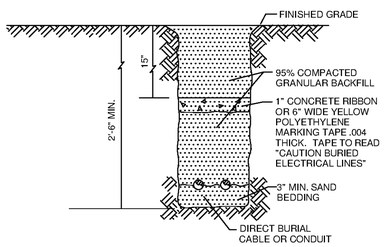

TRENCHING DETAIL

NO SCALE

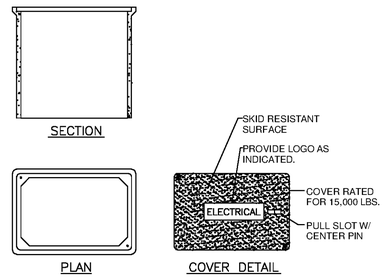

NOTES:

1. HANDHOLES FOR LOW VOLTAGE CABLES INSTALLED IN PARKING LOTS, SIDEWALKS, AND TURFED AREAS SHALL BE FABRICATED FROM AN AGGREGATE CONSISTING OF SAND AND WITH CONTINUOUS WOVEN GLASS STRANDS HAVING AN OVERALL COMPRESSIVE STRENGTH OF AT LEAST 10,000 PSI AND A FLEXURAL STRENGTH OF AT LEAST 5,000 PSI. PULLBOX AND HANDHOLE COVERS IN SIDEWALKS, AND TURFED AREAS SHALL BE OF THE SAME MATERIAL AS THE BOX. CONCRETE PULLBOXES SHALL CONSIST OF PRECAST REINFORCED CONCRETE BOXES, EXTENSIONS, BASES, AND COVERS.
2. IN PAVED AREAS, FRAMES AND COVERS FOR HANDHOLE ENTRANCES IN VEHICULAR TRAFFIC AREAS SHALL BE FLUSH WITH THE FINISHED SURFACE OF THE PAVING. IN UNPAVED AREAS, THE TOP OF MANHOLE COVERS SHALL BE APPROXIMATELY 1/2" ABOVE THE FINISHED GRADE.

QUAZITE COMPOSOLITE OR EQUAL

HANDHOLE DETAIL

NO SCALE

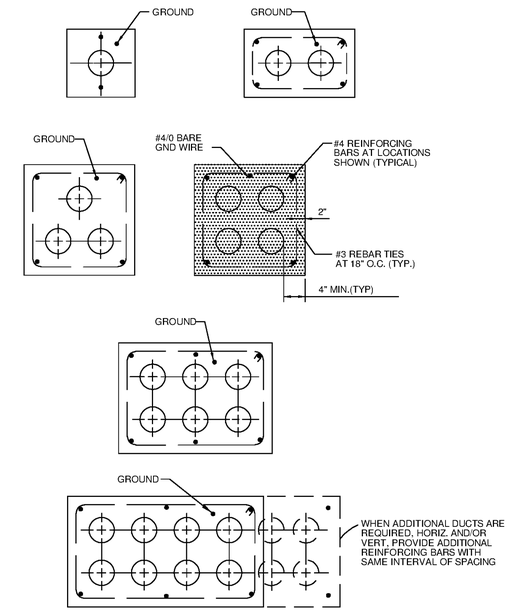

UNDERGROUND DUCT SECTIONS

NO SCALE

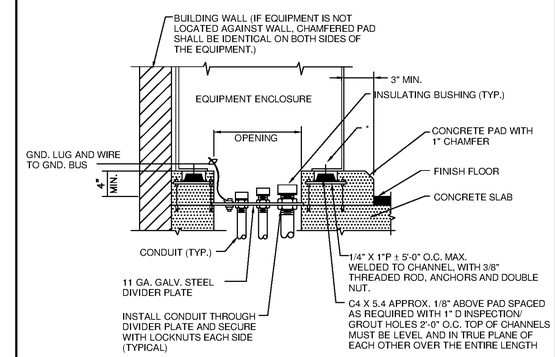

INTERIOR PAD MOUNTED EQUIPMENT DETAIL

NO SCALE

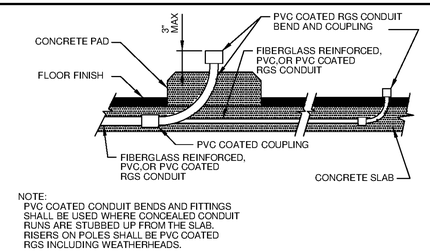

NOTE:
PVC COATED CONDUIT BENDS AND FITTINGS SHALL BE USED WHERE CONCEALED CONDUIT RUNS ARE STUBBED UP FROM THE SLAB. RISERS ON POLES SHALL BE PVC COATED RGS INCLUDING WEATHERHEADS.

CONDUIT STUB-UP DETAIL

NO SCALE

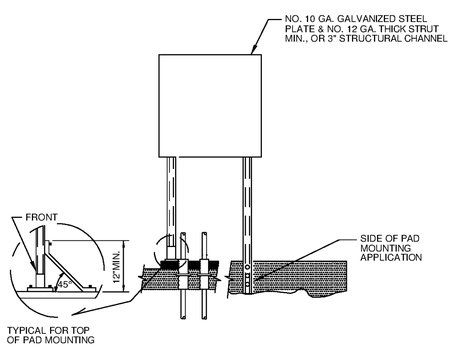

RACK MOUNTED EQUIPMENT DETAIL

NO SCALE

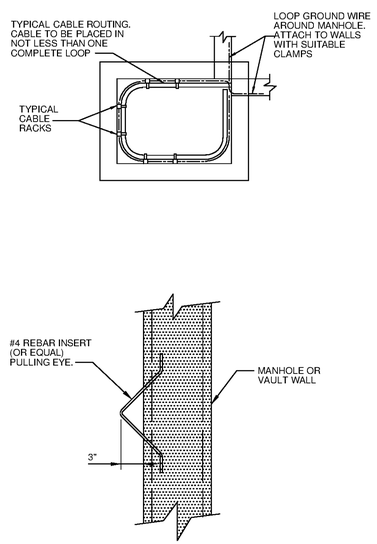

CABLE ROUTING & PULLING EYE DETAIL

NO SCALE

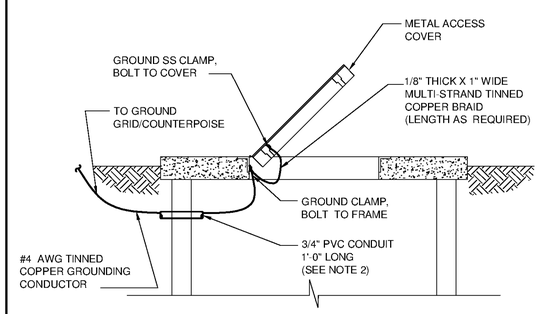

NOTES:

1. ON COVERS WITH MULTIPLE DOORS, PROVIDE BRAID FROM FRAME TO DOOR ON EACH DOOR PROVIDE WATERPROOF CAULKING WHERE GROUND CABLE AND CONDUIT PENETRATES AREA TO PREVENT INTRUSION OF GROUNDWATER AND ESCAPE OF VAPORS FROM AREA.
2. INSTALL GROUND WIRE SO THAT IT WILL NOT CROSS CLEAR OPENING OR PREVENT OR IMPEDE NORMAL METHOD OF REMOVING FLOATS, PUMPS, OR PEOPLE.

COVER AND DOOR GROUNDING

NO SCALE

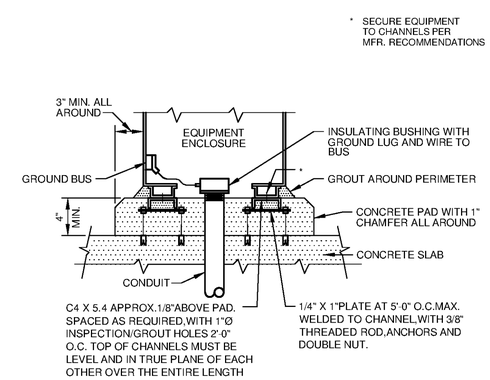

OUTDOOR PAD MOUNTED EQUIPMENT DETAIL

NO SCALE

TETRA TECH
www.tetratech.com
101 QUALITY CIRCLE, SUITE 140
HUNTSVILLE, ALABAMA 35806
PHONE: (256) 424-4077 FAX: (256) 424-4097

BID SET

MARK	DATE	DESCRIPTION	BY

HUNTSVILLE UTILITIES
SOUTHEAST WATER TREATMENT PLANT
ELECTRICAL DETAILS

Project No.:	200-11740-10003
Designed By:	CSW
Drawn By:	TAC
Checked By:	DAB

E-9501

Copyright: Tetra Tech

Bar Measures 1 inch

10/17/2014 11:03:10 AM P:\ER\11740\200-11740-10003\CAD\SHEETFILES\TREATMENT PLANT\WTP E-9501-E 9508 ELECTRICAL DETAILS.DWG - CALZARETTA, TIMOTHY