HUNTSVILLE UTILITIES WTP

CITY MULTI

SYSTEM SCHEMATIC DWG.

DIAGRAM SYMBOL LEGEND	
DISPLAY	DESCRIPTION
	POWER WIRE
	CONTROL WIRE
	REF. PIPE

PIPING LIST		
SYMBOL	BRANCH PIPE MODEL NAME	
J1	REDUCER	
SYMBOL	LIQUID PIPE/GAS PIPE SIZE	
P1	3/8	5/8
P2	1/4	1/2
P3	1-1/8	1-3/8
P4	7/8	
P5		1-1/8
P6	3/4	

NOTE:
MITSUBISHI REPRESENTATIVE SHALL RUN FINAL SELECTION TO DETERMINE REFRIGERANT PIPE SIZES.

ADDITIONAL REFRIGERANT CHARGE IS NEEDED DEPENDING ON THE SIZE AND LENGTH OF EXTENDED PIPING. PLEASE REFER THE AMOUNT OF PRE-CHARGE AND THE FORMULA OF CALCULATION WHICH IS MENTIONED ON THE DATA BOOK.

1.25mm²(16 AWG) : 1.25mm²(16 AWG) OR MORE. 0.75mm²(20 AWG) : BETWEEN 0.5mm²(24 AWG) AND 0.75mm²(20 AWG).

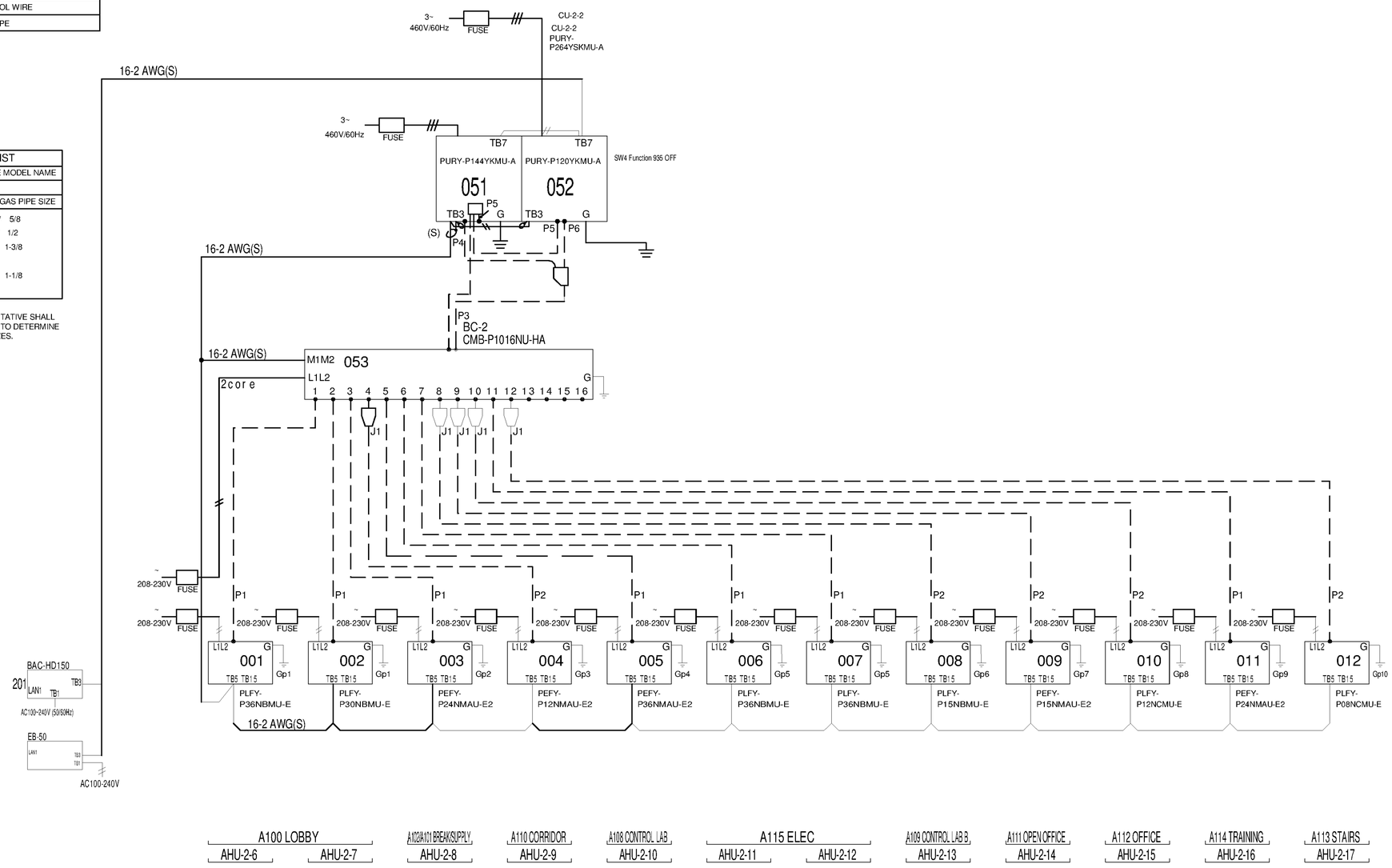

TETRA TECH
www.tetratech.com
101 QUALITY CIRCLE, SUITE 140
HUNTSVILLE, ALABAMA 35806
PHONE: (256) 424-4077 FAX: (256) 424-4097

BID SET

ALABAMA REGISTERED No. 16533 PROFESSIONAL ENGINEER DONALD S. BOYCE 10/24/2014

MARK	DATE	DESCRIPTION	BY

HUNTSVILLE UTILITIES
SOUTHEAST WATER TREATMENT PLANT

MECHANICAL HVAC CONTROLS

Project No.:	200-11740-10003
Designed By:	SBR
Drawn By:	SBR
Checked By:	DSB

M-9902

Copyright: Tetra Tech

Bar Measures 1 inch

10/1/2014 4:38:28 PM C:\Users\madison.leffler\Documents\WTP-11740-M-MAINPR_madison.leffler.rvt