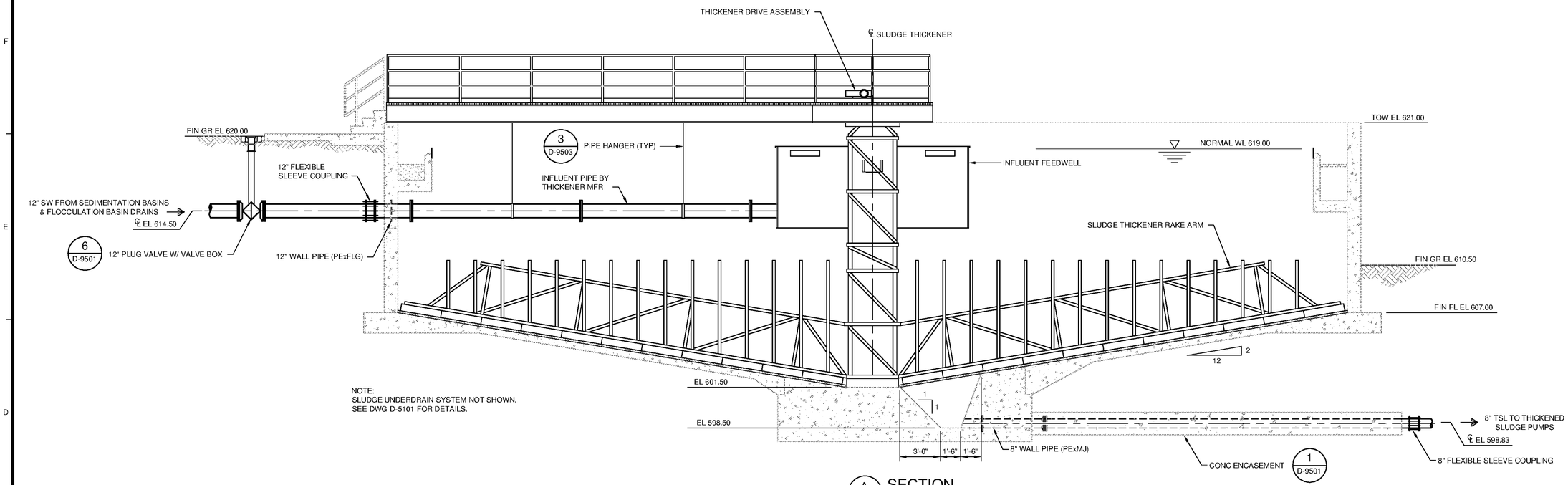

NOTE:
SLUDGE UNDERDRAIN SYSTEM NOT SHOWN.
SEE DWG D-5101 FOR DETAILS.

A D-5102 SECTION
SCALE: 1/4"=1'-0"

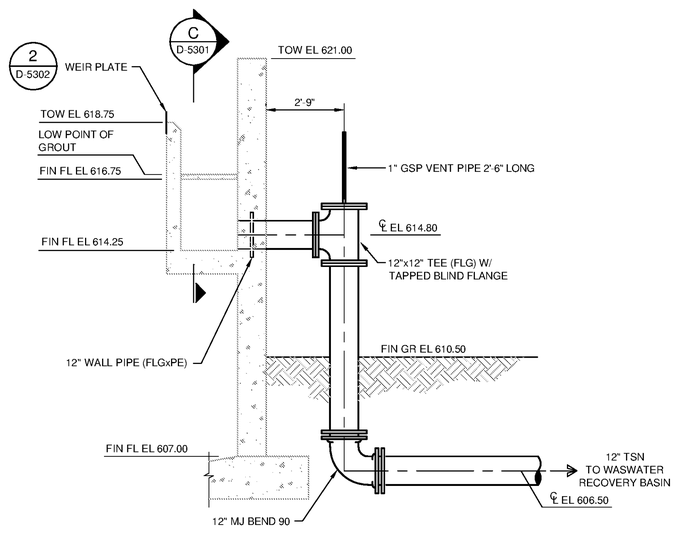

B D-5102 SECTION
SCALE: 3/8"=1'-0"

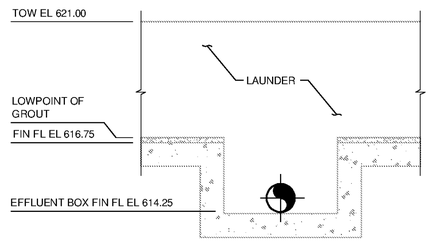

C D-5301 SECTION
SCALE: 3/8"=1'-0"

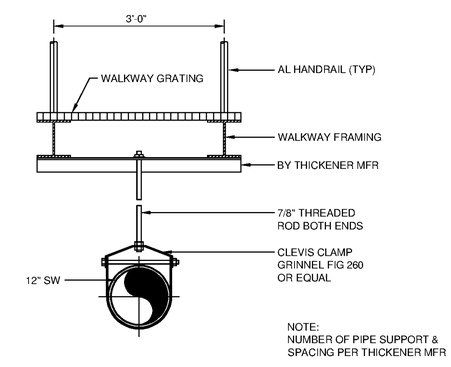

NOTE:
NUMBER OF PIPE SUPPORT & SPACING PER THICKENER MFR

D D-5102 SECTION
SCALE: 3/4"=1'-0"

TETRA TECH
www.tetratech.com
101 QUALITY CIRCLE, SUITE 140
HUNTSVILLE, ALABAMA 35806
PHONE: (256) 424-4077 FAX: (256) 424-4097

BID SET

MARK	DATE	DESCRIPTION	BY

HUNTSVILLE UTILITIES
SOUTHEAST WATER TREATMENT PLANT

SLUDGE THICKENER EQUIPMENT SECTIONS

Project No.:	200-11740-10003
Designed By:	SGN
Drawn By:	SGN
Checked By:	JPT

D-5301

Copyright: Tetra Tech

Bar Measures 1 inch

10/17/2014 3:48:06 PM - P:\IER\11740\200-11740-10003\CAD\SHEETFILES\TREATMENT PLANT\WTP-D-5301 SLUDGE THICKENER EQUIPMENT SECTIONS.DWG - EVANS, JON