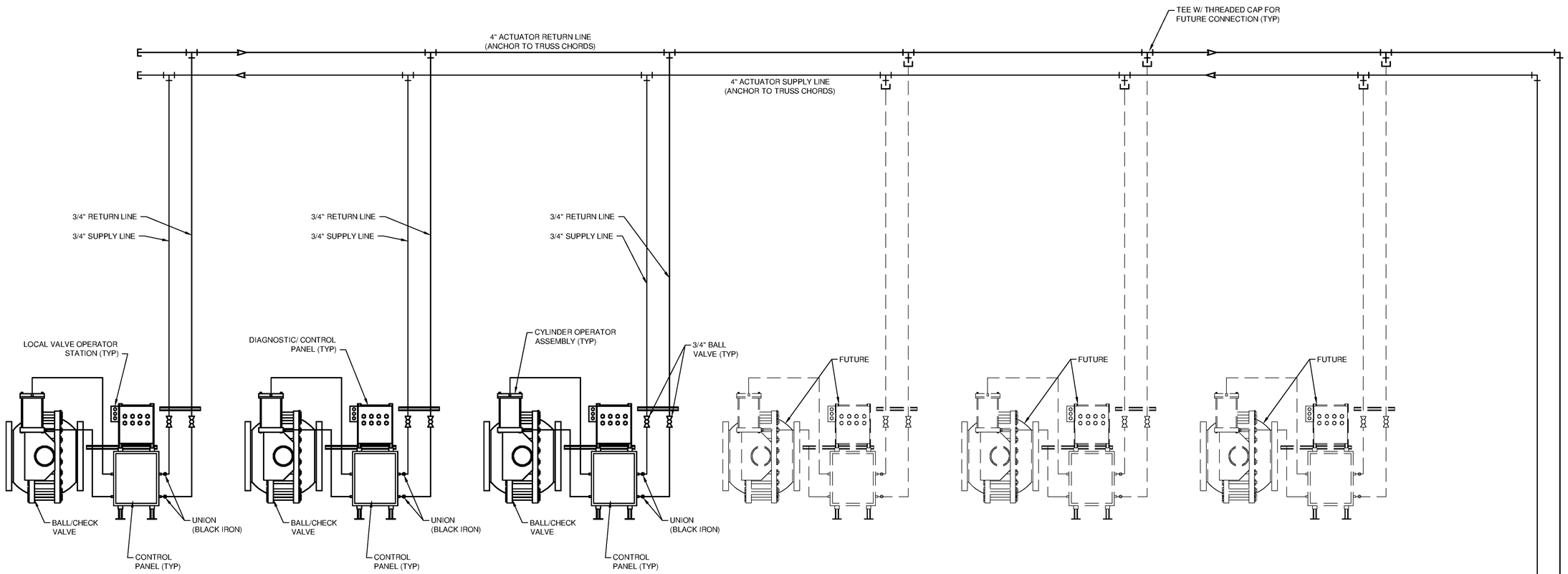

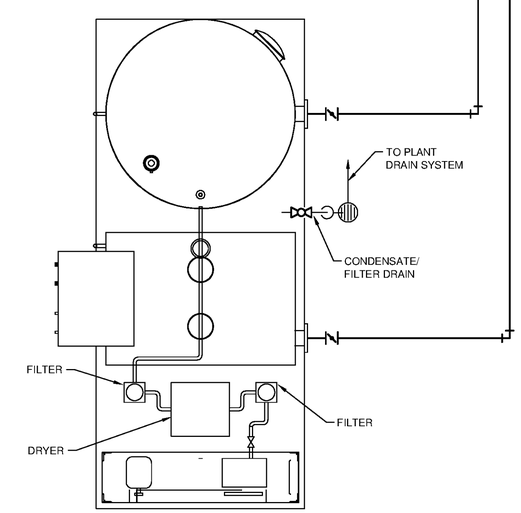

SKID-MOUNTED AIR/OIL
ACCUMULATOR SYSTEM

NOTES:

1. THE FINISHED WATER PUMP CHECK VALVE MANUFACTURER SHALL FURNISH THE FOLLOWING:
   - SKID-MOUNTED AIR/OIL ACCUMULATOR SYSTEM (1 UNIT)
   - 20" FLANGED BALL/CHECK VALVE W/ CYLINDER/OPERATOR ASSEMBLY (3 VALVES)
   - DIAGNOSTIC/CONTROL PANEL (3 PANELS)
   - CONTROL PANEL (3 PANELS)
2. HYDRAULIC OIL SUPPLY AND RETURN LINES SHALL BE SCHEDULE 40 BLACK STEEL PIPE.
3. CYLINDER/OPERATOR PIPING SHALL BE SCHEDULE 40 BLACK STEEL PIPE.

TETRA TECH
www.tetratech.com
101 QUALITY CIRCLE, SUITE 140
HUNTSVILLE, ALABAMA 35806
PHONE: (256) 424-4077 FAX: (256) 424-4097

BID SET

MARK	DATE	DESCRIPTION	BY

HUNTSVILLE UTILITIES
SOUTHEAST WATER TREATMENT PLANT

FINISHED WATER PUMP CHECK VALVE PIPING SCHEMATIC

Project No.:	200-11740-10003
Designed By:	JPT
Drawn By:	RLM
Checked By:	JEC

D-4105

Copyright: Tetra Tech

Bar Measures 1 inch

10/17/2014 3:47:23 PM P:\IER\11740\200-11740-10003\CAD\SHEETFILES\TREATMENT PLANT\WTP D-4105 FINISHED WATER PUMP CHECK VALVE PIPING SCHEMATIC.DWG - EVANS, JON