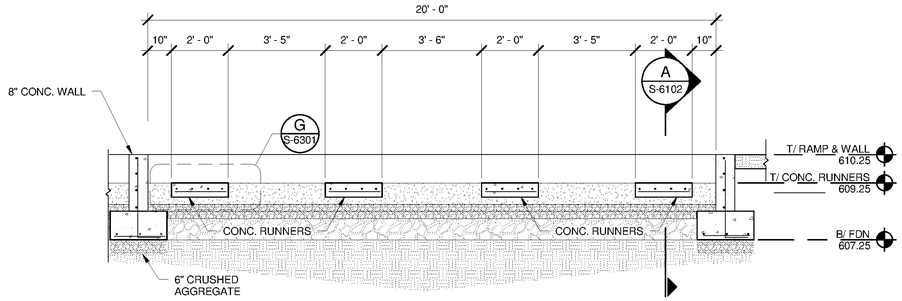

B S-6102 CONC. RUNNER SECTION
SCALE: 3/8" = 1'-0"

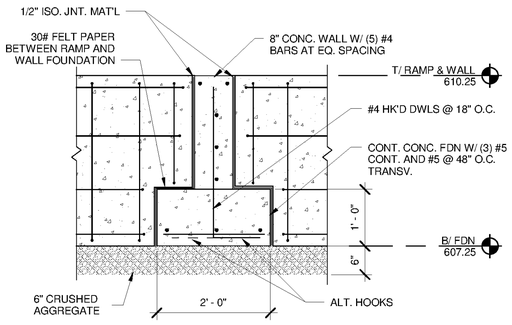

C S-6102 APPROACH CONCRETE
SCALE: 3/4" = 1'-0"

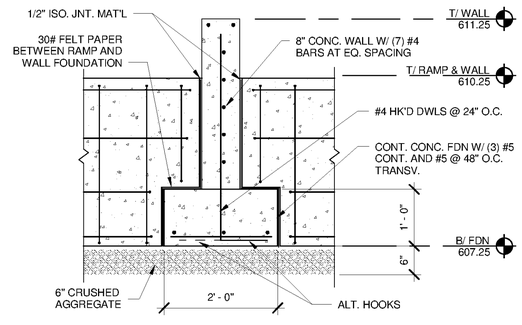

D S-6301 APPROACH CONCRETE AT SLUDGE FEED SPLASH PADS
SCALE: 3/4" = 1'-0"

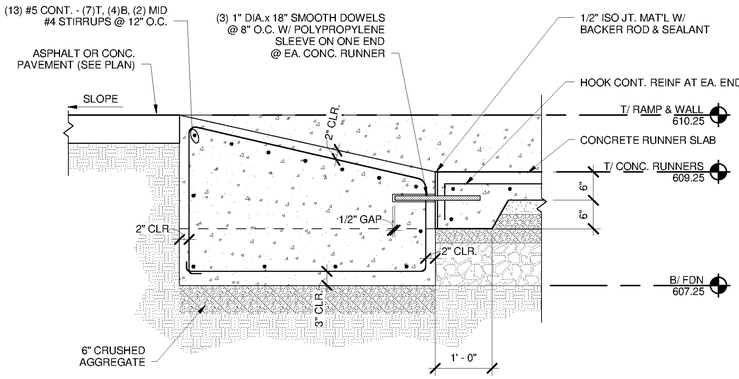

E S-6102 TYP. CONC. RAMP DETAIL
SCALE: 3/4" = 1'-0"

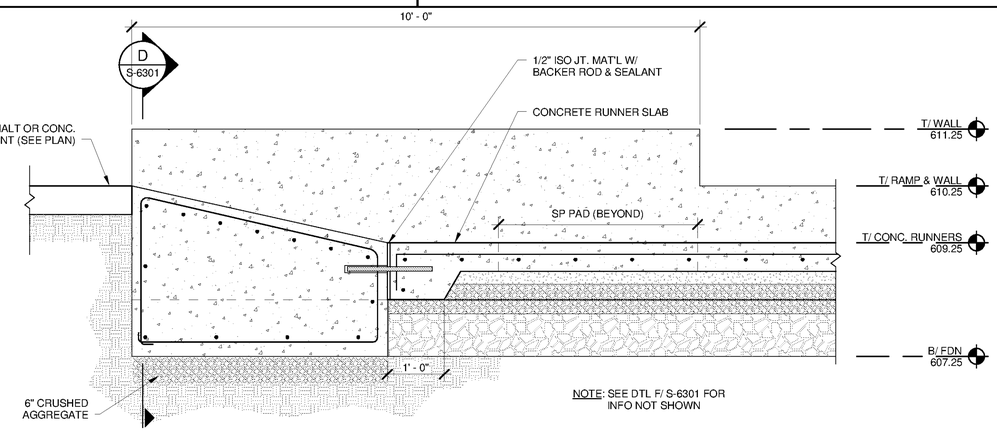

F S-6102 SECTION AT SPLASH PADS
SCALE: 3/4" = 1'-0"

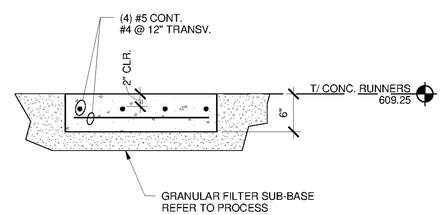

G S-6301 CONC. RUNNER DETAIL
SCALE 1" = 1'-0"

TETRA TECH
www.tetratech.com
101 QUALITY CIRCLE, SUITE 140
HUNTSVILLE, ALABAMA 35806
PHONE: (256) 424-4077 FAX: (256) 424-4097

BID SET

ALABAMA LICENSED No. 30153-E PROFESSIONAL ENGINEER CHRISTOPHER D. COLEMAN
10/24/14

MARK	DATE	DESCRIPTION	BY

HUNTSVILLE UTILITIES
SOUTHEAST WATER TREATMENT PLANT
SLUDGE DRYING BEDS
SECTIONS AND DETAILS

Project No.:	200-11740-10003
Designed By:	JLB
Drawn By:	BRF
Checked By:	CDC

S-6301

Copyright: Tetra Tech

Bar Measures 1 inch

10/1/2014 4:04:28 PM C:\Users\brent.fox\Documents\WTP-11740-S-SLDBED_brent.fox.rvt