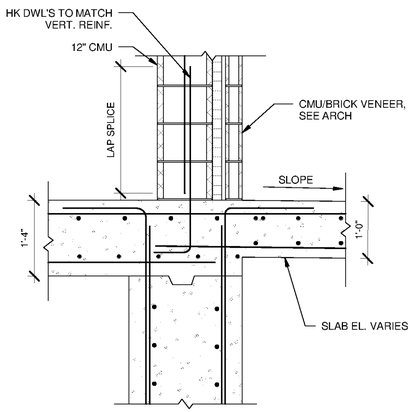

A S-4103 SECTION
SCALE: 3/4" = 1'-0"

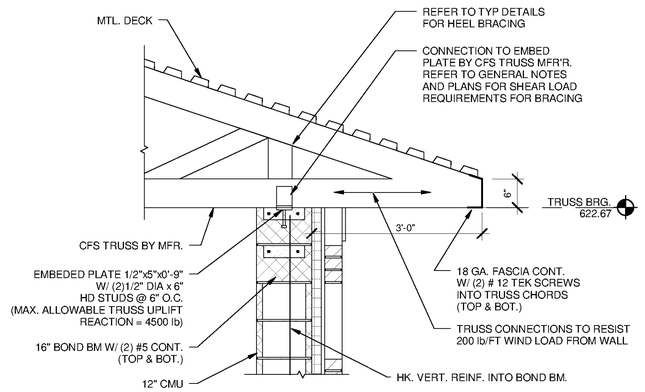

B S-4104 TRUSS BEARING DETAIL
SCALE: 3/4" = 1'-0"

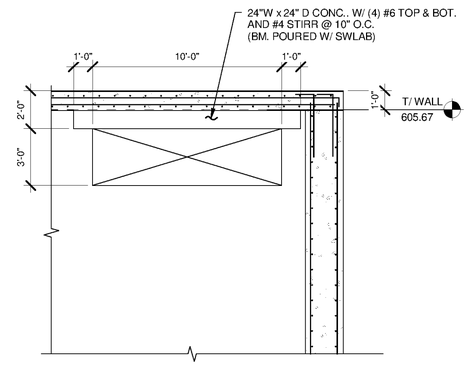

C S-4103 WALL OPENING
SCALE: 1/4" = 1'-0"

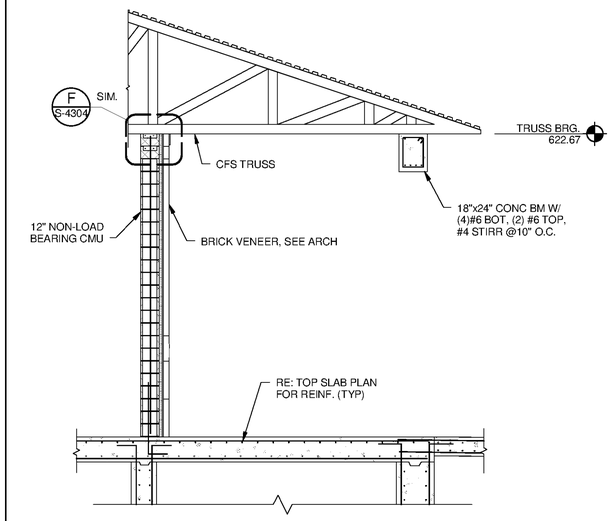

D S-4103 SECTION
SCALE: 1/4" = 1'-0"

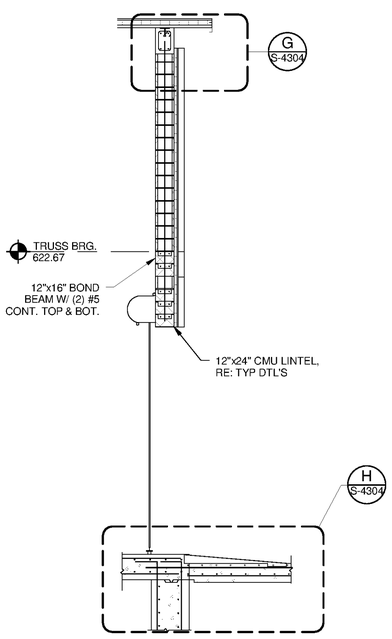

E S-4103 WALL SECTION AT RAKE
SCALE: 1/4" = 1'-0"

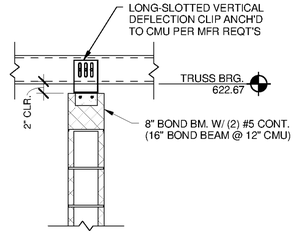

F S-4303 NON-LOAD BRG CMU DETAIL
SCALE: 3/4" = 1'-0"

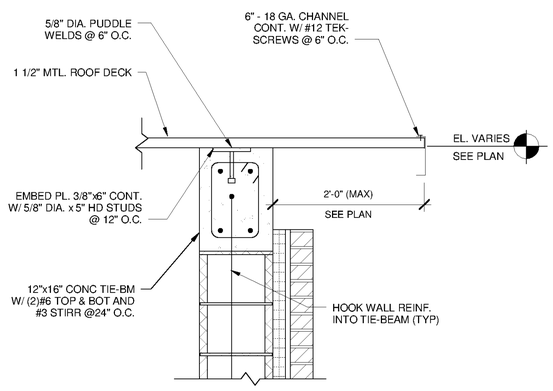

G S-4304 RAKED TIE-BEAM DETAIL
SCALE: 1" = 1'-0"

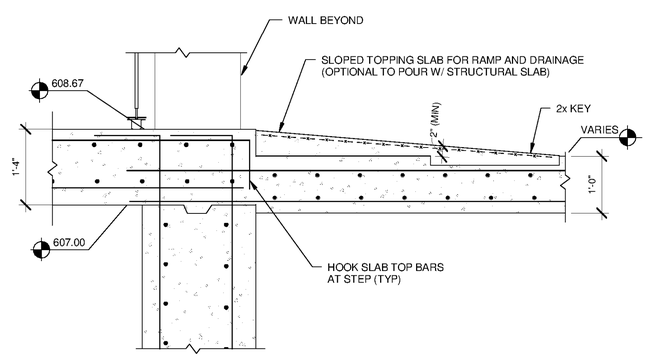

H S-4304 SECTION AT SLOPED TOPPING
SCALE: 3/4" = 1'-0"

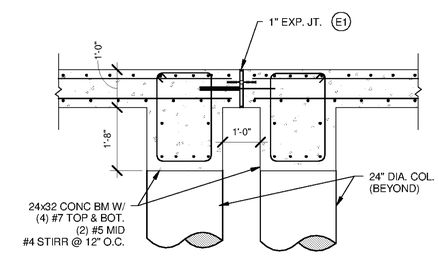

J S-4103 SECTION @ EXPANSION JT.
SCALE: 1/2" = 1'-0"

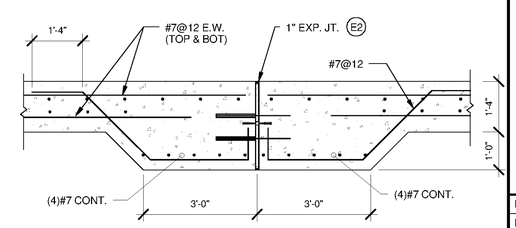

K S-4102 EXP. JT. DET. @ SLAB
SCALE: 1/2" = 1'-0"

TETRA TECH
www.tetratech.com
101 QUALITY CIRCLE, SUITE 140
HUNTSVILLE, ALABAMA 35806
PHONE: (256) 424-4077 FAX: (256) 424-4097

BID SET

ALABAMA LICENSED PROFESSIONAL ENGINEER No. 30103-E CHRIS D. COLEMAN
10/3/14

MARK	DATE	DESCRIPTION	BY

HUNTSVILLE UTILITIES
SOUTHEAST WATER TREATMENT PLANT

FINISHED WATER PUMP STATION SECTIONS AND DETAILS

Project No.:	200-1170-10003
Designed By:	JLB
Drawn By:	BRF
Checked By:	CDC

S-4304

Copyright: Tetra Tech

Bar Measures 1 inch

9/30/2014 3:39:55 PM C:\Users\brent.fox\Documents\WTP-11740-S-FINWTR_brent.fox.rvt