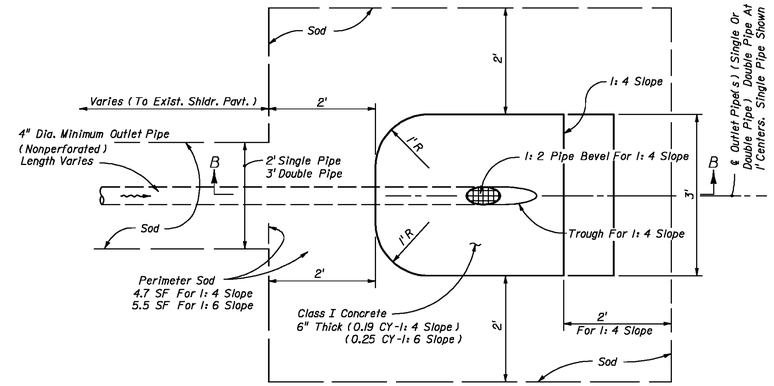

PLAN - OUTLET PIPE APRON

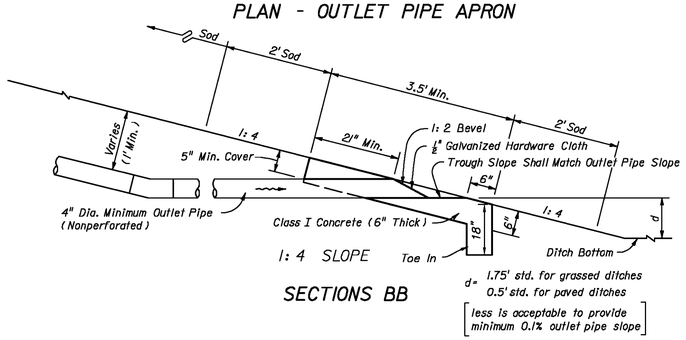

SECTIONS BB

GENERAL NOTES FOR
CONCRETE PAVEMENT SUBDRAINAGE

1. No trench greater than 2' in depth will be allowed overnight. Trenches shall be barricaded at all times.

2. Concrete pavement subdrainage shall be constructed adjacent to the low edge of the roadway pavement and under travel lanes, auxiliary pavement and shoulders, as called for in the plans. Wen the low edge shifts between outside and inside edges of pavement the concrete pavement subdrainage shall extend 50' beyond and begin 50' before the flat point (100' overlap).

   Concrete pavement subdrainage shall be placed on the low side of ramps of crossroad terminals.

3. Concrete pavement subdrainage shall be constructed on a grade parallel with the edge of pavement profile, except on profiles flatter than one-tenth percent (0.10%) the concrete pavement subdrainage shall be constructed on a grade of one-tenth percent (0.10%).

4. Immediately prior to placing the filter fabric the entire vertical face of the concrete pavement shall be cleaned to remove adhering base material and soil.

5. The Contractor shall devise a procedure for holding the filter fabric in position on the vertical face of the trench. The procedure must be approved by the Engineer prior to placement of the draincrete.

6. The upper end of each separate run of the concrete pavement subdrainage pipe shall be capped.

7. Outlet pipes shall be sonstructed at a maximum of 500' intervals. Elbows or 1/8 bends shall be used to connect the outlet pipe to the concrete pavement subdrain pipe. The elbows or bends shall be of the same material as the outlet pipe but compatible with the pipe.

   When directed by the Engineer, outlet pipes shall be stubbed into existing inlets or into existing ditch pavements at an elevation 6" above the inlet flowline or ditch bottom. Concrete apron and bordering sod are not required for stubbed outlets, but replacement sodding will be required at trenches for pipes stubbed into paved ditches.

   In sag vertical curves separate outlet pipes for concrete pavement subdrains from opposite directions shall use a single apron unless otherwise shown in the plans or otherwise directed by the Engineer.

   Backfill around outlet pipes shall be of cohesive soils, draincrete will not be permitted.

8. Existing paved shoulder that is removed for the construction of outlet pipes shall be replaced with Type SP asphaltic concrete at the rate of 500 LB per SY.

9. The conract unit price for Edgedrain Outlet Pipe (4") LF, shall be full compensation for removal of existing shoulder pavement, trench excavation, pipe and fitting, concrete apron, hardware cloth, sod, stubbing into existing inlets and paved ditches, restoration of ditch pavement, backfill in place, and disposal of excess materials.

CONCRETE COLLAR

1 DETAIL
SCALE: N.T.S.

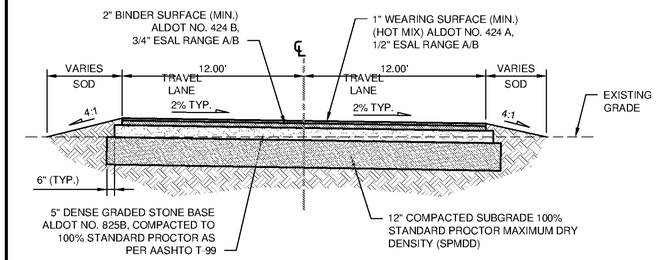

NOTE:
ALL CONSTRUCTION TO BE IN ACCORDANCE WITH ALDOT SPECIFICATION 410.

TYPICAL ROAD SECTION - MONOSLOPE

2 DETAIL
SCALE: N.T.S.

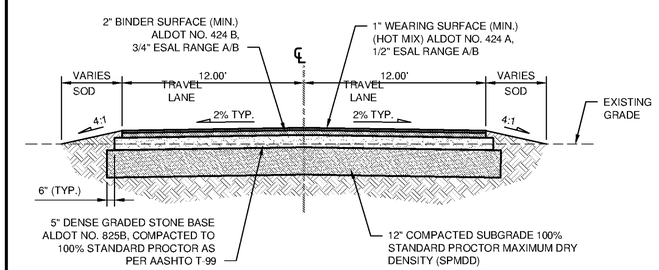

NOTE:
ALL CONSTRUCTION TO BE IN ACCORDANCE WITH ALDOT SPECIFICATION 410.

TYPICAL ROAD SECTION - CROWNED

3 DETAIL
SCALE: N.T.S.

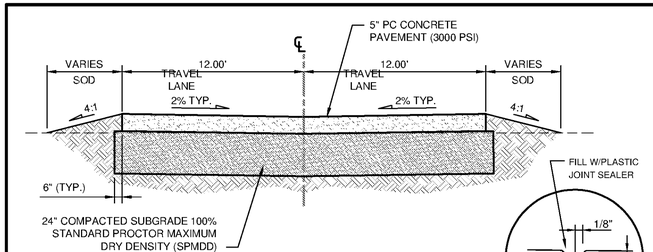

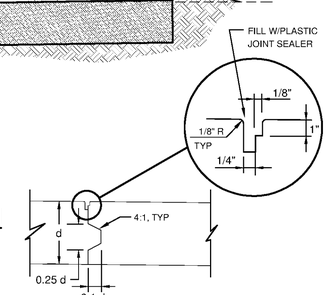

CONSTRUCTION / CONTRACTION JOINT

NOTE:
ALL CONSTRUCTION TO BE IN ACCORDANCE WITH ALDOT SPECIFICATION 450.

CONCRETE ROAD SECTION - INVERTED CROWN

4 DETAIL
SCALE: N.T.S.

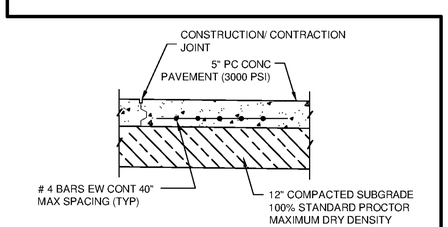

PAVEMENT SECTION

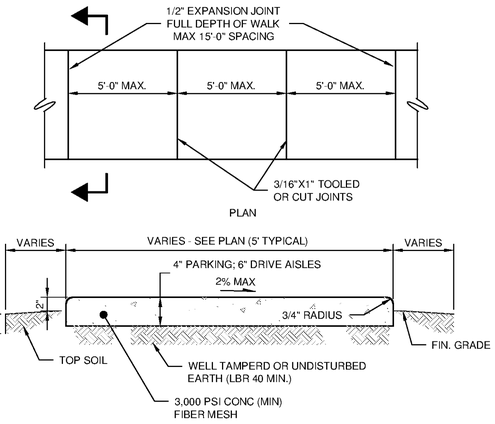

NOTE:

1. ALL CONSTRUCTION TO BE IN ACCORDANCE WITH ALDOT SPECIFICATION 618.
2. TOLERANCE: GRADE LINE AND ALIGNMENT SHALL NOT VARY GREATER THAN 1/8" OVER 10' WHEN MEASURED BY A 10' STRAIGHT EDGE.

CONCRETE SIDEWALK

5 DETAIL
SCALE: N.T.S.

NOT USED

6 DETAIL
SCALE: N.T.S.

TETRA TECH
www.tetratech.com
101 QUALITY CIRCLE, SUITE 140
HUNTSVILLE, ALABAMA 35806
PHONE: (256) 424-4077 FAX: (256) 424-4097

BID SET

MARK	DATE	DESCRIPTION	BY

HUNTSVILLE UTILITIES
SOUTHEAST WATER TREATMENT PLANT

STANDARD CIVIL DETAILS

Project No.:	200-11740-10003
Designed By:	JRW
Drawn By:	WDV
Checked By:	JPT

C-9508

Bar Measures 1 inch