EXHIBIT D.3

T-1 Record Drawings: East Side of Hartsfield International Airport Water Storage and Pumping Station

(See Volume II)

ELECTRICAL SECTION
8/17/82

CITY OF ATLANTA, GEORGIA

WATER IMPROVEMENT PROGRAM

EAST SIDE HARTSFIELD INTERNATIONAL AIRPORT

WATER STORAGE AND PUMPING STATION

COUNCIL OF THE CITY OF ATLANTA

MADISON·MADISON·INTERNATIONAL/FLOOD & ASSOCIATES, INC.

CONSULTING ENGINEERING
JOINT VENTURE

ATLANTA, GEORGIA

ENGINEERS PROJECT NO. 7749-02/7733-1

LEGEND

DRAWING N° ON WHICH DETAIL OR SECTION WILL APPEAR

SEQUENTIAL DETAIL LETTER OR SECTION NUMBER DESIGNATION

DRAWING ON WHICH DETAIL OR SECTION APPEARS

DETAIL LETTER OR SECTION NUMBER DESIGNATION

DRAWING N° THAT DETAIL OR SECTION IS TAKEN FROM

GENERAL NOTES

1. ALL ELEVATIONS BASED ON U.S.C. & G.S. DATUM.
2. ALL ELEVATIONS SHOWN ARE IN FEET.
3. PROVIDE A MINIMUM 6" CLEARANCE, OR AS NOTED, BETWEEN ALL LINES. NO SPECIAL PAYMENT ALLOWED.
4. IN ACCORDANCE WITH THE GENERAL CONDITIONS, IT SHALL BE THE SOLE RESPONSIBILITY OF THE CONTRACTOR TO LOCATE AND AVOID ALL UTILITIES, OTHER STRUCTURES AND OBSTRUCTIONS BOTH ABOVE AND BELOW THE GROUND SURFACE.
5. ALL WATER SERVICE IS TO BE CONTINUOUS THROUGHOUT CONSTRUCTION.
6. THE CONTRACTOR SHALL RESTORE ALL CULVERTS, HEADWALLS AND STORM DRAIN INLETS REMOVED OR DISTURBED BY THE CONSTRUCTION OPERATION.
7. CONTRACTOR SHALL EMPLOY A LAND SURVEYOR REGISTERED IN THE STATE OF GEORGIA TO REFERENCE AND RESTORE PROPERTY CORNERS AND LAND MARKERS WHICH MAY BE DESTROYED BY CONSTRUCTION.

INDEX

SHEET NO.	DRAWING NO.	TITLE
GENERAL		
1	-	COVER SHEET
2	-	LEGEND, GENERAL NOTES & INDEX
GRADING		
3	G-1	OVERALL SITE GRADING PLAN
4	G-2	PUMPING STATION SITE AND GRADING PLAN
5	G-3	GRADING AND DRAINAGE DETAILS
6	G-4	SANITARY SEWER PLAN & PROFILE
MECHANICAL		
7	M-1	OVERALL MECHANICAL SITE PLAN
8	M-2	PUMPING STATION MECHANICAL SITE PLAN
9	M-3	RESERVOIR PLAN & SECTIONS
10	M-4	RESERVOIR DETAILS
11	M-5	PUMPING STATION FLOOR PLAN
12	M-6	PUMPING STATION-LONGITUDINAL SECTIONS
13	M-7	PUMPING STATION-TRANSVERSE SECTIONS
14	M-8	VACUUM PRIMING AND CHLORINATION SYSTEMS
15	M-9	HYDRO-PNEUMATIC SYSTEM
16	M-10	CHLORINATION EQUIPMENT AND MISCELLANEOUS DETAILS
17	M-11	PUMPING STATION PIPING DETAILS
18	M-12	PUMPING STATION MISCELLANEOUS DETAILS
PLUMBING		
19	P-1	SITE PLUMBING PLAN
20	P-2	PLUMBING FLOOR PLAN
21	P-3	PLUMBING CROSS SECTIONS
22	P-4	SITE LAWN SPRINKLER SYSTEM
HEATING AND VENTILATION		
23	HV-1	SCHEDULE SHEET AND CONTROL WIRING DIAGRAM
24	HV-2	HEATING AND VENTILATING FLOOR PLAN
25	HV-3	HEATING AND VENTILATING SECTIONS
26	HV-4	HEATING AND VENTILATING DETAILS
27	HV-5	HEATING AND VENTILATING CONTROL DIAGRAMS
INSTRUMENTATION		
28	I-1	SCHEMATIC FLOW DIAGRAM
29	I-2	CONTROL DIAGRAM
30	I-3	CONTROL PANEL
STRUCTURAL		
31	S-1	GENERAL NOTES
32	S-2	RESERVOIR BOTTOM PLAN
33	S-3	RESERVOIR TOP PLAN
34	S-4	RESERVOIR SECTIONS
35	S-5	RESERVOIR SECTIONS
36	S-6	PUMPING STATION CONCRETE BOX DETAILS
37	S-7	FOUNDATION PLAN
38	S-8	GENERAL NOTES AND FOUNDATION DETAILS
39	S-9	ROOF FRAMING PLAN
40	S-10	CROSS SECTION AND CRANE RAIL PLAN
41	S-11	ELEVATION, SECTIONS AND DETAILS
42	S-12	PUMP FOUNDATION, SECTIONS AND DETAILS
ELECTRICAL		
43	E-1	ELECTRICAL SITE PLAN
44	E-2	ELECTRICAL SYMBOL LEGEND
45	E-3	ELECTRICAL SINGLE LINE DIAGRAM
46	E-4	ELECTRICAL LIGHTING PLAN
47	E-5	ELECTRICAL POWER PLAN
48	E-6	ELECTRICAL GROUNDING PLAN
49	E-7	ELECTRICAL GROUNDING DETAILS
50	E-8	5 KV MOTOR STARTER FRONT/ELEVATION & PANEL SCHEDULE
51	E-9	CONDUIT AND CABLE SCHEDULE
52	E-10	CONDUIT AND CABLE SCHEDULE
ARCHITECTURAL		
53	A-1	PUMP STATION FLOOR PLAN
54	A-2	ELEVATIONS
55	A-3	ELEVATIONS
56	A-4	SECTION AND DETAILS
57	A-5	SECTION AND DETAILS
58	A-6	ROOF PLAN
59	A-7	WALL SECTIONS
60	A-8	WALL SECTIONS
61	A-9	REFLECTED CEILING PLAN
62	A-10	SITE PLANTING PLAN

AS BUILT 8|16|82

AF 7145

HORIZONTAL CONTROL COORDINATE SCHEDULE

LOCATION	DESCRIPTION	NORTH COORDINATE	EAST COORDINATE
A	NORTHWEST PROPERTY CORNER	N 4,125.00	E 19,187.99
B	NORTHEAST PROPERTY CORNER	N 4,125.00	E 19,682.71
C	P.C.C. EAST PROPERTY LINE	N 3,731.95	E 19,571.91
D	P.C.C. EAST PROPERTY LINE	N 3,266.42	E 19,212.29
E	SOUTH PROPERTY CORNER	N 3,118.04	E 18,961.61
F	P.T. WEST PROPERTY LINE	N 3,556.34	E 19,187.99
1	NORTH WALL OF TANK AT CENTERLINE OF TANK	N 4,071.00	E 19,350.99
2	SOUTH WALL OF TANK AT CENTERLINE OF TANK	N 3,691.00	E 19,350.99
3	CENTERLINE 36" TEE UNDER PUMPING STATION	N 3,532.89	E 19,318.62
4	CENTERLINE 36" 90° ELL WEST OF PUMPING STATION	N 3,542.89	E 19,279.89
5	COLUMN B-7 (NORTHEAST CORNER PUMPING STATION)	N 3,586.93	E 19,351.30
6	COLUMN B-1 (SOUTHEAST CORNER PUMPING STATION)	N 3,506.25	E 19,330.46
7	VERT. DISCH. LINE PUMP #4	N 3,512.97	E 19,323.93
8	WEST ℄ SUCTION MAIN	N 3,635.99	E 19,285.35
9	℄ 36" TEE N.W. OF PUMPING STATION	N 3,631.48	E 19,302.77
10	℄ 36" TEE N. OF PUMPING STATION	N 3,621.48	E 19,341.50
11	EAST ℄ SUCTION MAIN	N 3,615.36	E 19,364.66
12	℄ TURNING POINT OF WEST SUCTION LINE NEXT TANK	N 3,658.35	E 19,337.32
13	℄ 30" TEE AT EAST FILL LINE TO TANK	N 3,651.00	E 19,[illegible].66
14	℄ 36" ELL ON DISCH. LINE SOUTH OF PUMPING STA.	N 3,461.18	E 19,331.47
15	℄ 36" TEE ON DISCH. LINE NORTH OF PUMP. STATION	N 3,601.13	E 19,367.62
20	℄ ROADWAY INTERSECTION WITH PRORERTY LINE	N 3,353.18	E 19,315.25
21	P.C. ℄ ROADWAY	N 3,395.81	E 19,274.41
22	P.T. ℄ ROADWAY	N 3,490.00	E 19,249.80

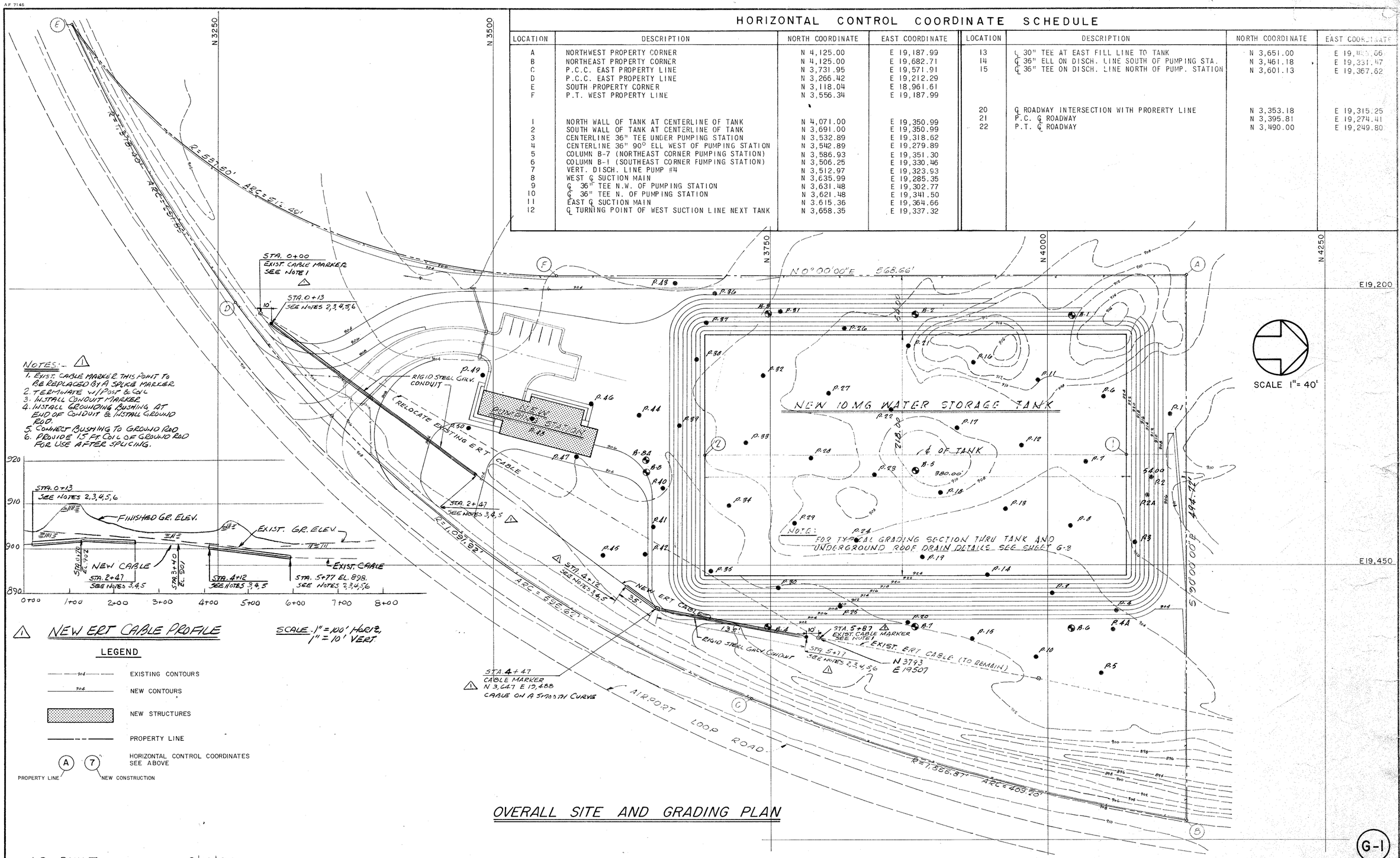

NOTES:
1. EXIST. CABLE MARKER THIS POINT TO BE REPLACED BY A SPLICE MARKER.
2. TERMINATE W/POST & COIL
3. INSTALL CONDUIT MARKER
4. INSTALL GROUNDING BUSHING AT END OF CONDUIT & INSTALL GROUND ROD.
5. CONNECT BUSHING TO GROUND ROD
6. PROVIDE 15 FT COIL OF GROUND ROD FOR USE AFTER SPLICING.

NEW ERT CABLE PROFILE

SCALE: 1" = 100' HORIZ. 1" = 10' VERT.

LEGEND

- EXISTING CONTOURS
- NEW CONTOURS
- NEW STRUCTURES
- PROPERTY LINE
- HORIZONTAL CONTROL COORDINATES SEE ABOVE (A / 7: PROPERTY LINE / NEW CONSTRUCTION)

OVERALL SITE AND GRADING PLAN

G-1

AS BUILT 8|16|82

NO.	DESCRIPTION	BY	FIRM	DATE	BY	DATE
	REVISIONS	SUBMITTAL			BUREAU OF WATER APPROVAL	
1	PRE-BID REVISIONS	FWS	F&A	7/79		

CONSULTING ENGINEERS
SUBMITTED BY: [signature]
REG. ENGR. GA. NO. 10317 DATE 1-29-79
MADISON · MADISON · INTERNATIONAL / FLOOD & ASSOCIATES, INC.

CITY OF ATLANTA
BUREAU OF WATER
T. E. STALLWORTH, JR., DIRECTOR
APPROVED BY: [signature]
DATE: 3-15-79

CITY OF ATLANTA, GEORGIA
DEPARTMENT OF ENVIRONMENT & STREETS BUREAU OF WATER
WATER IMPROVEMENT PROGRAM
EAST SIDE HARTSFIELD INTERNATIONAL AIRPORT
WATER STORAGE AND PUMPING STATION

MADISON · MADISON · INTERNATIONAL / FLOOD & ASSOCIATES, INC.
CONSULTING ENGINEERING
Joint Venture
ATLANTA, GEORGIA

DESIGNED BY: J. R. H. | CHECKED BY: C. V. | DATE: AUG. 1979
DRAWN BY: A. J. S. | SCALE: 1" = 40'

OVERALL SITE AND GRADING PLAN

PROJ. NO. 7733-1 | SHEET NO. 3 OF 62

AF 7145

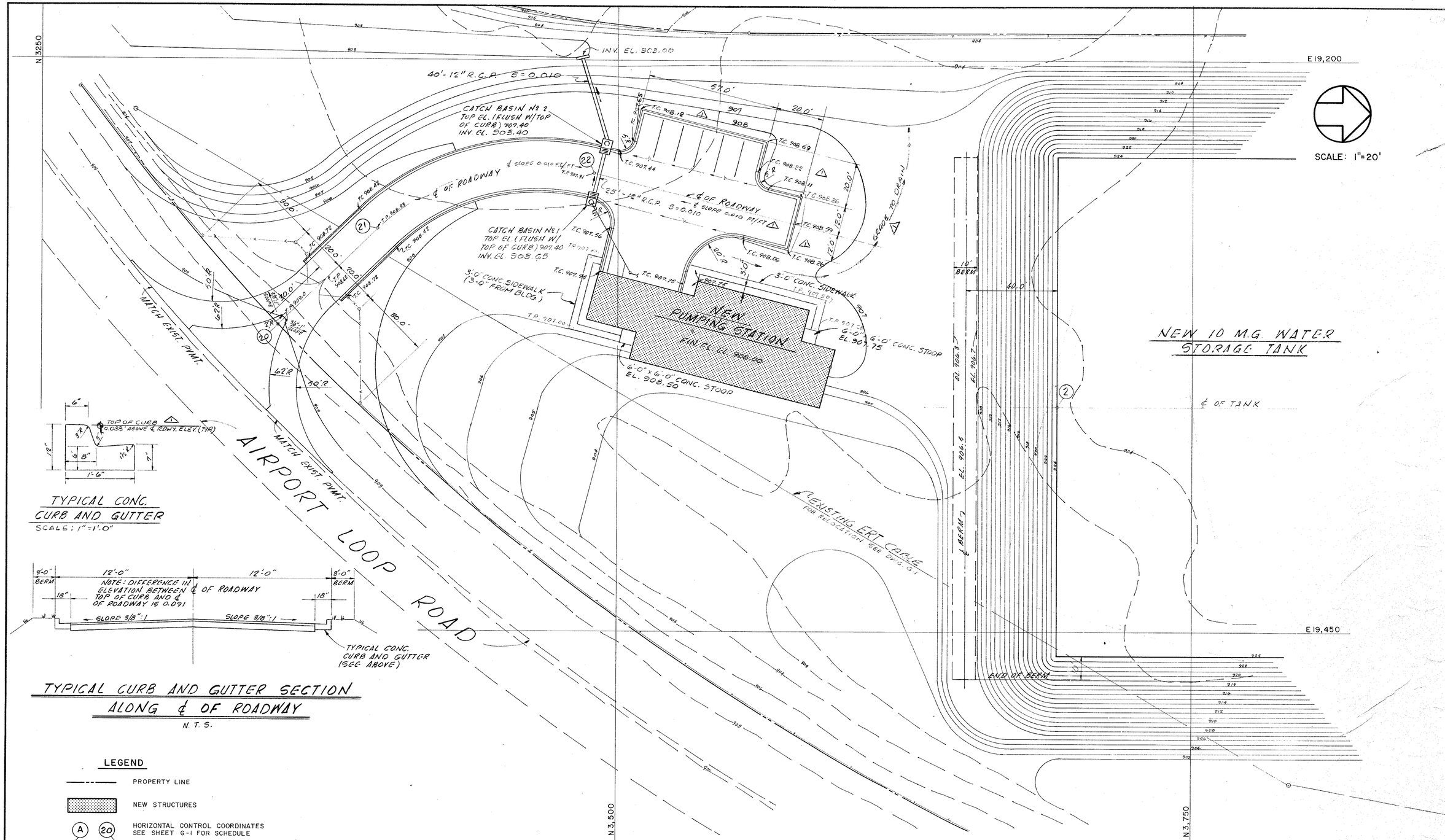

LEGEND

———	PROPERTY LINE
▒	NEW STRUCTURES
(A) (20)	HORIZONTAL CONTROL COORDINATES SEE SHEET G-1 FOR SCHEDULE
PROPERTY LINE / NEW CONSTRUCTION	
T.C.	FINISHED ELEVATION ON TOP OF CURB
T.P.	FINISHED ELEVATION ON TOP OF PAVEMENT

AS BUILT 8/16/82

G-2

NO.	DESCRIPTION	BY	FIRM	DATE	BY	DATE
△1	PRE-BID REVISIONS	FWS	F&A	7/79		
	REVISIONS	SUBMITTAL			BUREAU OF WATER APPROVAL	

CONSULTING ENGINEERS
SUBMITTED BY: [signature]
REG. ENGR. GA. NO. 10317 DATE 1-29-79
MADISON · MADISON · INTERNATIONAL / FLOOD & ASSOCIATES, INC.

CITY OF ATLANTA
BUREAU OF WATER
T. E. STALLWORTH, JR., DIRECTOR
APPROVED BY: [signature]
DATE: 3-19-79

CITY OF ATLANTA, GEORGIA
DEPARTMENT OF ENVIRONMENT & STREETS BUREAU OF WATER
WATER IMPROVEMENT PROGRAM
EAST SIDE HARTSFIELD INTERNATIONAL AIRPORT
WATER STORAGE AND PUMPING STATION

MADISON · MADISON · INTERNATIONAL / FLOOD & ASSOCIATES, INC.
CONSULTING ENGINEERING
Joint Venture
ATLANTA, GEORGIA

DESIGNED BY: J. R. H. CHECKED BY: C. V. DATE AUG. 1979
DRAWN BY: A. J. S. SCALE AS SHOWN

PUMPING STATION
SITE AND GRADING PLAN

PROJ. NO. 7733-1 SHEET NO. 4 OF 62

A.F. 7145

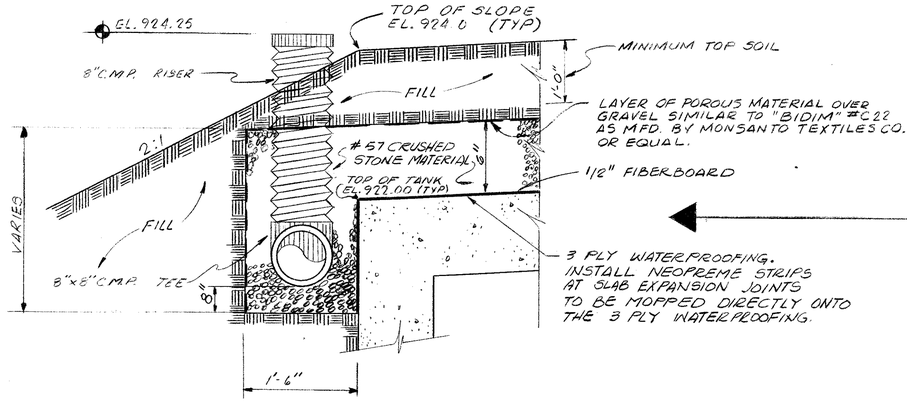

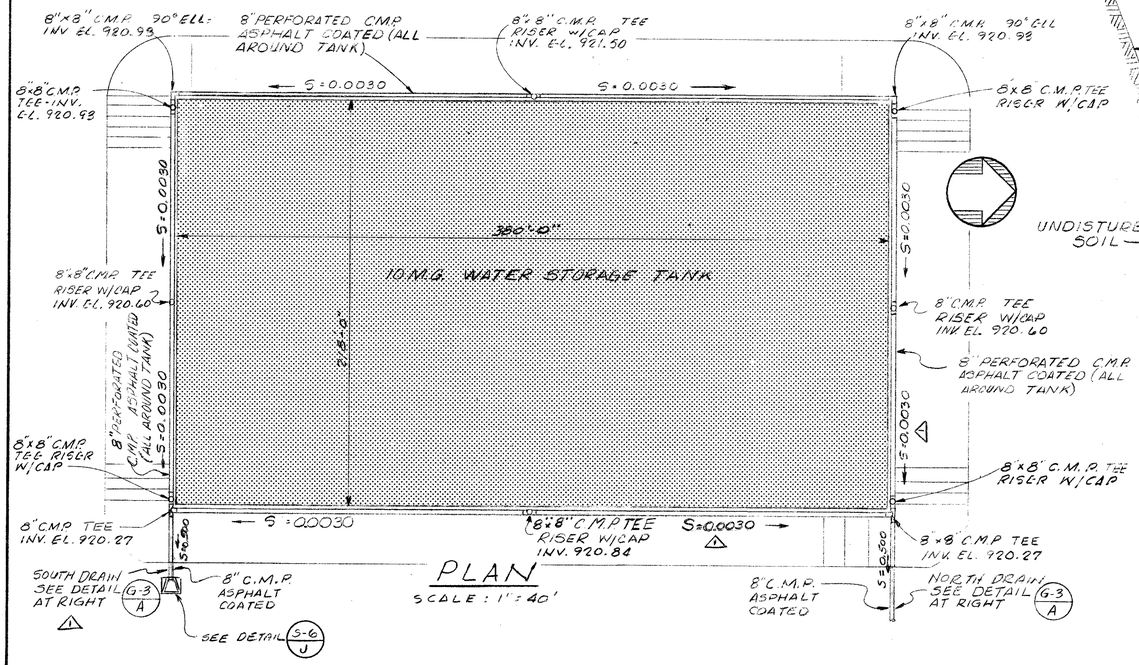

PLAN

SCALE : 1" = 40'

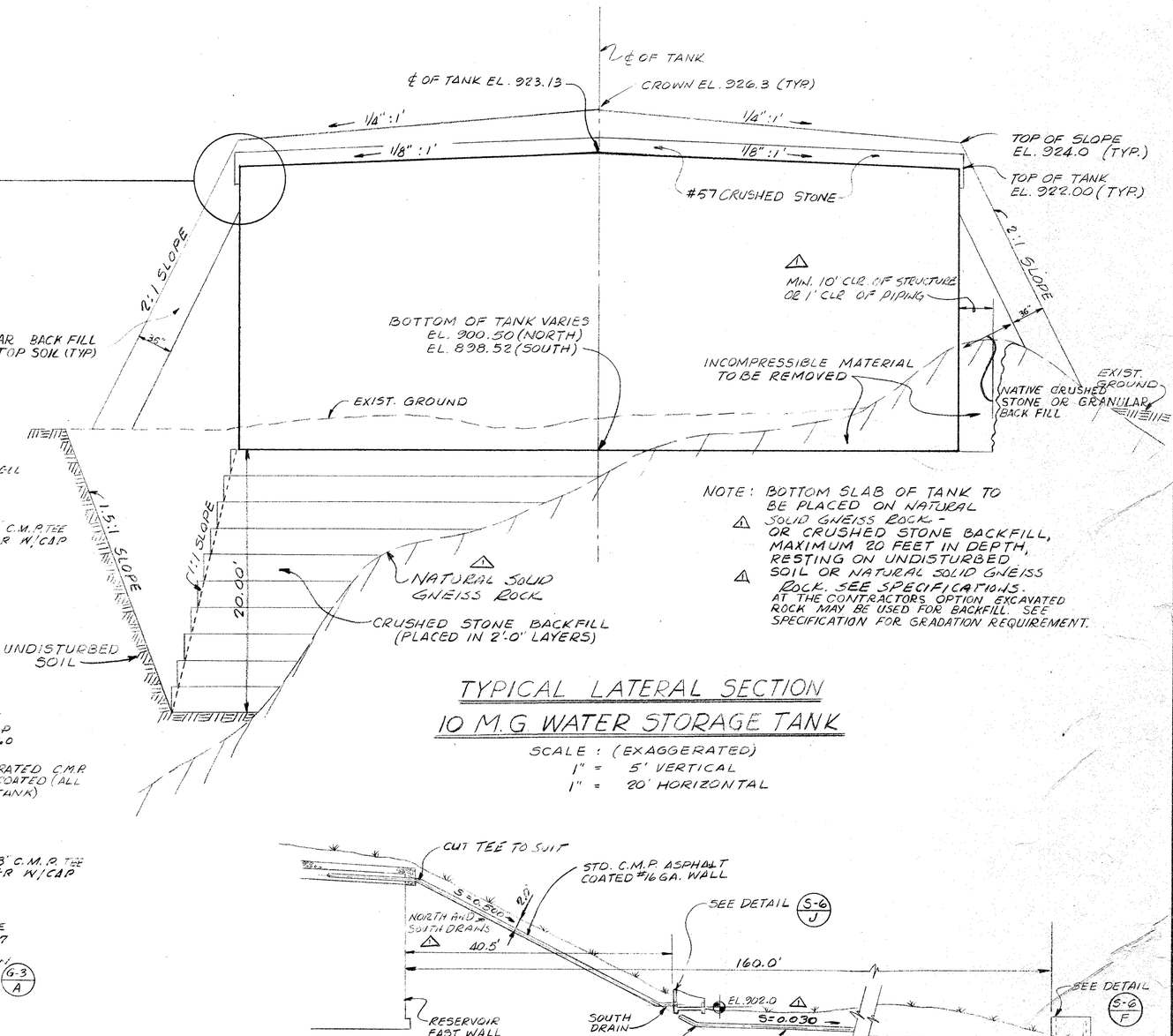

NOTE: BOTTOM SLAB OF TANK TO BE PLACED ON NATURAL

1. SOLID GNEISS ROCK - OR CRUSHED STONE BACKFILL, MAXIMUM 20 FEET IN DEPTH, RESTING ON UNDISTURBED SOIL OR NATURAL SOLID GNEISS ROCK. SEE SPECIFICATIONS. AT THE CONTRACTORS OPTION EXCAVATED ROCK MAY BE USED FOR BACKFILL. SEE SPECIFICATION FOR GRADATION REQUIREMENT.

TYPICAL LATERAL SECTION
10 M.G WATER STORAGE TANK

SCALE : (EXAGGERATED)
1" = 5' VERTICAL
1" = 20' HORIZONTAL

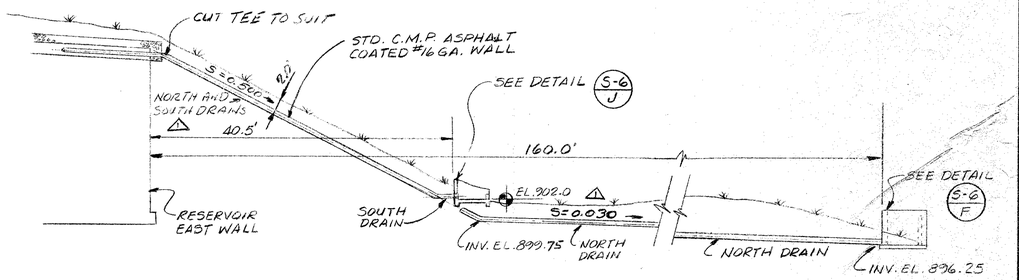

RESERVOIR ROOF DRAIN DETAIL G-3 A

SCALE : 1"=10'

LEGEND

C. M. P. CORRUGATED METAL PIPE

AS BUILT 8|16|82

NO.	REVISIONS DESCRIPTION	BY	FIRM	DATE	BY	DATE
1	PRE-BID REVISIONS	FWS	F&A	7/79		
		SUBMITTAL			BUREAU OF WATER APPROVAL	

CONSULTING ENGINEERS
SUBMITTED BY: [signature]
REG. ENGR. GA. NO. 10317 DATE 1-29-79
MADISON · MADISON · INTERNATIONAL / FLOOD & ASSOCIATES, INC.

CITY OF ATLANTA
BUREAU OF WATER
T. E. STALLWORTH, JR., DIRECTOR
APPROVED BY: [signature]
DATE: 3-15-79

CITY OF ATLANTA, GEORGIA
DEPARTMENT OF ENVIRONMENT & STREETS BUREAU OF WATER
WATER IMPROVEMENT PROGRAM
EAST SIDE HARTSFIELD INTERNATIONAL AIRPORT
WATER STORAGE AND PUMPING STATION

MADISON · MADISON · INTERNATIONAL / FLOOD & ASSOCIATES, INC.
CONSULTING ENGINEERING
Joint Venture
ATLANTA, GEORGIA

DESIGNED BY: J. R. H. | CHECKED BY: C. V. | DATE: AUG. 1979
DRAWN BY: E. W. | SCALE: AS SHOWN

GRADING AND DRAINAGE DETAILS

PROJ. NO. 7733-1 | SHEET NO. 5 OF 62

G-3

AF 7145

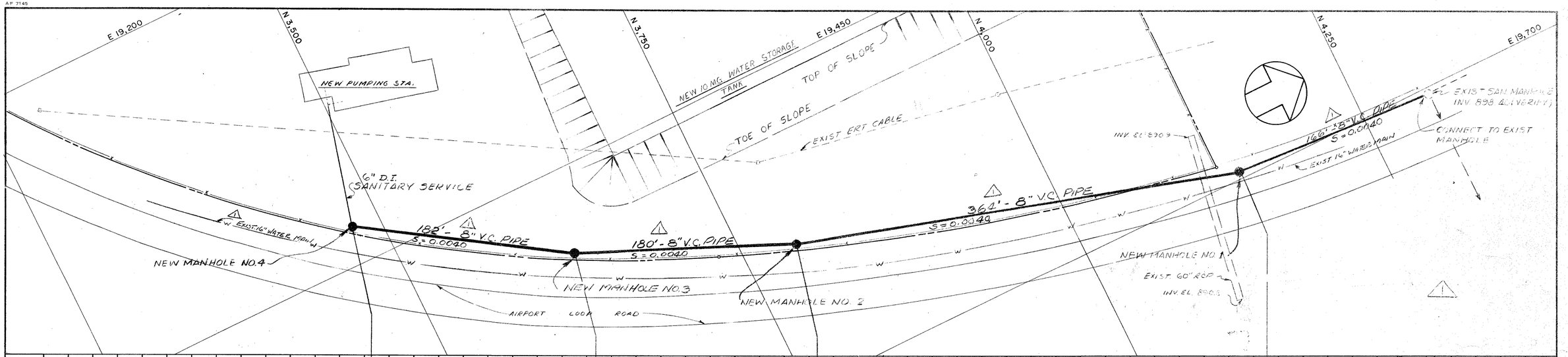

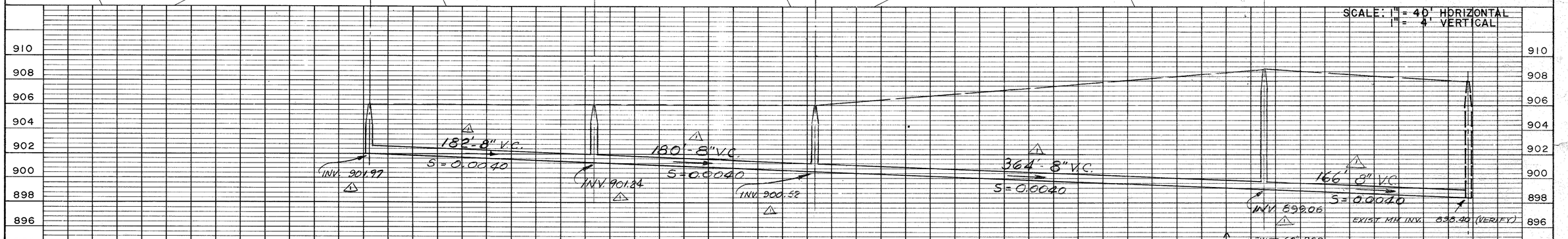

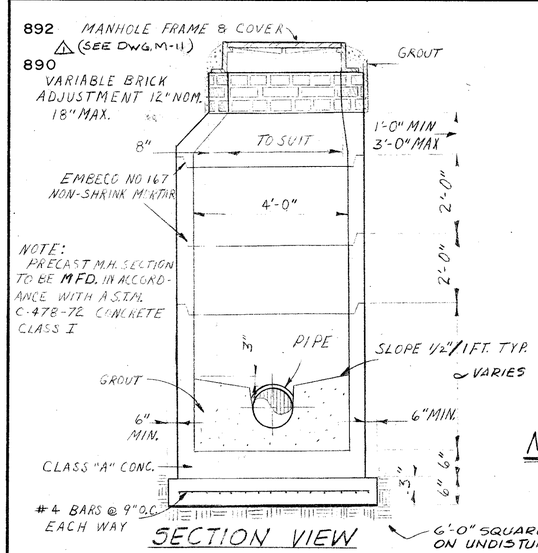

STANDARD MANHOLE DETAIL

N.T.S.

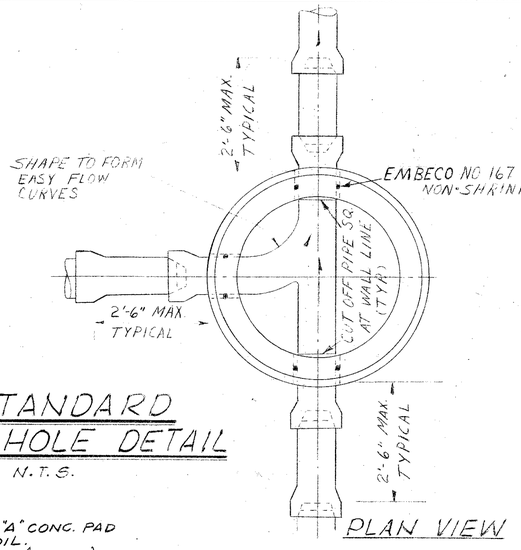

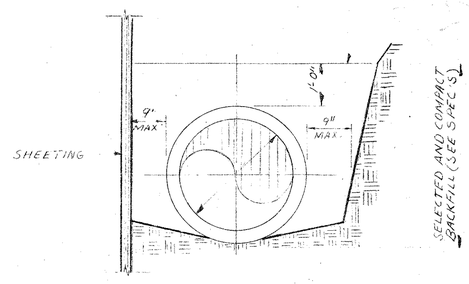

TYPICAL TRENCH DETAIL

N.T.S.

WOOD SHEETING IF USED TO BE LEFT IN PLACE BELOW THIS ELEVATION. STEEL SHEETING TO BE LEFT IN PLACE ONLY AS DIRECTED

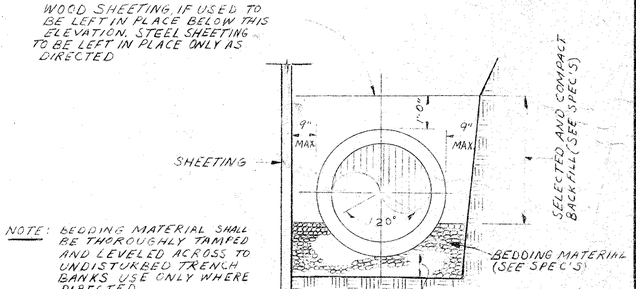

NOTE: BEDDING MATERIAL SHALL BE THOROUGHLY TAMPED AND LEVELED ACROSS TO UNDISTURBED TRENCH BANKS USE ONLY WHERE DIRECTED.

TYPICAL UNDERBEDDING DETAIL

N.T.S.

G-4

AS BUILT 8|16|82

NO.	DESCRIPTION	BY	FIRM	DATE	BY	DATE
	REVISIONS	SUBMITTAL			BUREAU OF WATER APPROVAL	
△	PRE-BID REVISIONS	FWS	F&A	7/79		

CONSULTING ENGINEERS
SUBMITTED BY: [signature]
REG. ENGR. GA. NO. 10317 DATE 1-29-79
MADISON-MADISON-INTERNATIONAL / FLOOD & ASSOCIATES, INC.

CITY OF ATLANTA
BUREAU OF WATER
T.E. STALLWORTH, JR. DIRECTOR
APPROVED BY: [signature]
DATE: 3-15-79

CITY OF ATLANTA, GEORGIA

DEPARTMENT OF ENVIRONMENT & STREETS BUREAU OF WATER

WATER IMPROVEMENT PROGRAM

EAST SIDE HARTSFIELD INTERNATIONAL AIRPORT WATER STORAGE AND PUMPING STATION

MADISON · MADISON · INTERNATIONAL / FLOOD & ASSOCIATES, INC.
CONSULTING ENGINEERING
Joint Venture
ATLANTA, GEORGIA.

DESIGNED BY: J.R.H. | CHECKED BY: C.V. | DATE: AUG. 1979
DRAWN BY: P.B. | SCALE: AS SHOWN

SANITARY SEWER PLAN AND PROFILE

PROJ. NO. 7733-1 | SHEET NO. 6 OF 62

AF 7145

YARD PIPING LEGEND

- BURIED GATE VALVE W/NUT OPERATOR IN MANHOLE
- BURIED BUTTERFLY VALVE W/NUT OPERATOR & VALVE BOX
- MOTORIZED BALL VALVE
- REDUCER
- CHECK VALVE
- DRESSER COUPLING

YARD BOX LEGEND

BOX NO.'s	DESCRIPTION	DETAILED
(1)	24" CHECK VALVE	S-6
(2)	24" CHECK VALVE	S-6
(3)	24" CHECK VALVE	S-6
(4)	FLOW TUBE	S-6
(5)	FLOW TUBE	S-6
(6)	POST CHLORINATION (FUTURE)	S-6
(7)	POST CHLORINATION (FUTURE)	S-6
(8)	PRE-CHLORINATION (FUTURE)	S-6
(9)	TANK OVERFLOW & DRAIN HEADWALL	S-6
(10)	ROOF DRAIN HEADWALL	S-6

TANK OVERFLOW & DRAINS HEADWALL (M-1 / A)

SCALE 1" = 10'

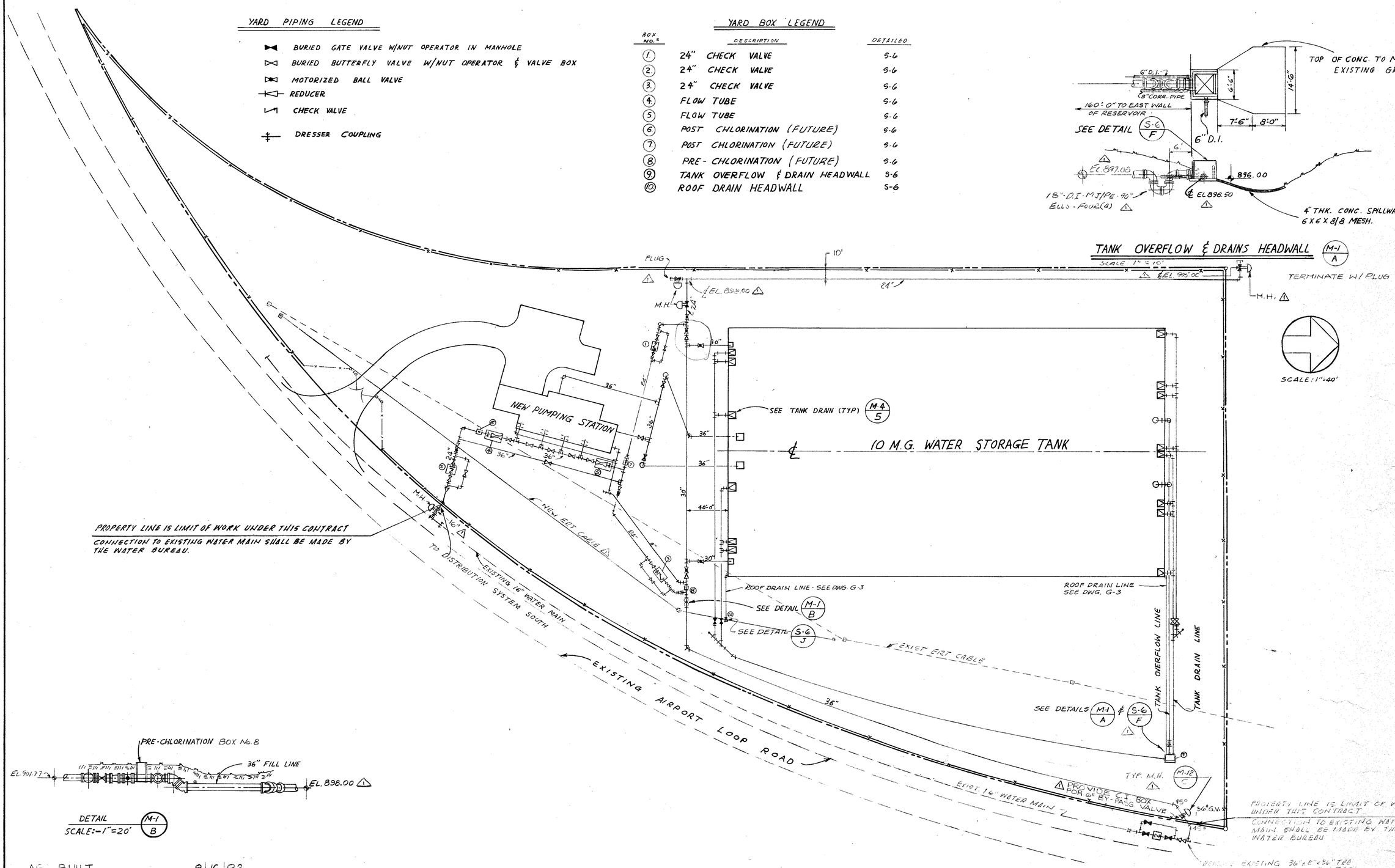

AS BUILT 8|16|82

NO.	DESCRIPTION	BY	FIRM	DATE	BY	DATE
	REVISIONS	SUBMITTAL			BUREAU OF WATER APPROVAL	
1	PRE-BID REVISIONS	FWS	FEA	7/79		

CONSULTING ENGINEERS
SUBMITTED BY: [signature]
REG. ENGR. GA. NO. 10317 DATE 1-29-79
MADISON · MADISON · INTERNATIONAL / FLOOD & ASSOCIATES, INC.

CITY OF ATLANTA
BUREAU OF WATER
T. E. STALLWORTH, JR., DIRECTOR
APPROVED BY: [signature]
DATE: 3-15-79

CITY OF ATLANTA, GEORGIA

DEPARTMENT OF ENVIRONMENT & STREETS BUREAU OF WATER

WATER IMPROVEMENT PROGRAM

EAST SIDE HARTSFIELD INTERNATIONAL AIRPORT

WATER STORAGE AND PUMPING STATION

MADISON · MADISON · INTERNATIONAL / FLOOD & ASSOCIATES, INC.
CONSULTING ENGINEERING
Joint Venture
ATLANTA, GEORGIA

DESIGNED BY: C.V. CHECKED BY: C.V. DATE AUG. 1979
DRAWN BY: F.J. SCALE AS SHOWN

OVERALL MECHANICAL SITE PLAN

PROJ. NO. 7733-1 SHEET NO. 7 OF 62

M-1

AF 7145

24" DISCHARGE TO AIRPORT SYSTEM. FOR CONT. SEE DWG. M-11

36" B.F.V.

B.F.V.

36" D.I.P. ℄ EL. 901.50

36" D.I.P.

24" SLOPING TO ℄ EL. 896.52

36" ℄ EL 901.50

FOR CONTINUATION SEE DWG. M-1 & M-11

36" D.I.P PUMP SUCTION

℄ EL. 895.52

NEW 10 M.G. WATER STORAGE TANK

NEW PUMPING STATION

B.F.V.

36" D.I.P SUCTION

POST CHLORINATION BOX NO. 1 SEE NOTE 5.

36" B.F.V. (TYP.)

36" D.I.P PUMP SUCTION

℄ EL. 895.52

36"x24" RED.

C.L.

31" G.S.

SEE NOTE 5. BOX NO. 6

EL. 898.0 ℄

FIELD ROUTE TO INSIDE OF STATION

36" ℄

B.F.V.

B.F.V.

B.F.V.

B.F.V.

B.F.V.

EL. 898.0 ℄

BOX NO 4

FLOW TUBE (TYP.)

POST CHLORINATION

1" TAP FOR PRESS. TRANSMITTER

B.F.V. (N.C.)

BOX NO. 5

4" G.S.

EL. 898.0 ℄

36" ℄

℄ EL. 898.00

36"x24" RED.

24" BALL VALVE (TYP.)

4" WATER METER PAID BY CONTRACTOR (INSTALLED BY CITY)

36"x24" RED.

24" BALL VALVE

PLUG

6"x6"x4" TEE

B.F.V.

BOX NO. 2

B.F.V.

BYPASS (TYP.)

B.F.V.

24"x16" RED.

ALTITUDE VALVE (30" BALL VALVE)

30" D.I.P. FILL

℄ EL 901.77

30" BALL VALVE (TYP.) MOTORIZED

36"x30" RED.

36"x6" TEE

PRE-CHLORINATION POINT @ BOX NO. 3 SEE NOTE 5.

GATE VALVE VAULT (TYP.) FOR DETAILS SEE DWG. M-12

NEW SANITARY LINE - SEE DWG. G-4

NEW MANHOLE No. 4 SEE DWG. G-4

FIELD ROUTE TO INSIDE OF VAULT

16" G.V.

3" BY-PASS VALVE (PROVIDE C.I. BOX)

1" TAP FOR PRESS. TRANSMITTER

EXISTING 16" WATER MAIN

NEW 16" DRESSER CPLG

6" GV (WITH BOX)

BOX NO. 3

36"x24" RED.

36" FILL LINE - FOR CONT. SEE DWG. M-1

GENERAL NOTES

1. ALL DISCHARGE PIPING WITHIN STATION SITE SHALL BE THRUST BLOCKED AND SECURED WITH TIE ROD ANCHORS. FOR DETAILS SEE DWG. M-11 & M-12
2. FOR CONCRETE BOX DETAILS SEE DWG. S-6
3. ENCASE SANITARY SEWER LINE IN CLASS "C" CONCRETE 10' EACH SIDE OF ℄ ALONG SEWER SERVICE WHERE SEWER SERVICE CROSSES ABOVE A WATER MAIN.
4. PROVIDE TWO (2) SPOOL PIECES OF APPROPRIATE LAYOUTS LENGTH FOR EACH DIAMETER, FLANGED YARD, PIPING, & VALVE PROVIDED.
5. BOX NOS. 6, 7, & 8 TO BE INCLUDED IN BASE BID

YARD PIPING PLAN

SCALE: 1" = 10'

M-2

AS BUILT 8/16/82

NO.	DESCRIPTION	BY	FIRM	DATE	BY	DATE
	REVISIONS	SUBMITTAL			BUREAU OF WATER APPROVAL	
1	PRE-BID REVISIONS	FWS	F&A	7/79		

CONSULTING ENGINEERS
SUBMITTED BY: [signature]
REG. ENGR. GA. NO. 10317 DATE 1-29-79
MADISON · MADISON · INTERNATIONAL / FLOOD & ASSOCIATES, INC.

CITY OF ATLANTA
BUREAU OF WATER
T. E. STALLWORTH, JR., DIRECTOR
APPROVED BY: [signature]
DATE: 3-19-79

CITY OF ATLANTA, GEORGIA

DEPARTMENT OF ENVIRONMENT & STREETS BUREAU OF WATER

WATER IMPROVEMENT PROGRAM

EAST SIDE HARTSFIELD INTERNATIONAL AIRPORT
WATER STORAGE AND PUMPING STATION

MADISON · MADISON · INTERNATIONAL / FLOOD & ASSOCIATES, INC.
CONSULTING ENGINEERING
Joint Venture
ATLANTA, GEORGIA

DESIGNED BY: C.V. CHECKED BY: C.V. DATE AUG. 1979
DRAWN BY: F. J. SCALE AS SHOWN

PUMPING STATION
MECHANICAL SITE PLAN

PROJ. NO. 7733-1 SHEET NO. 8 OF 62

AF 7145

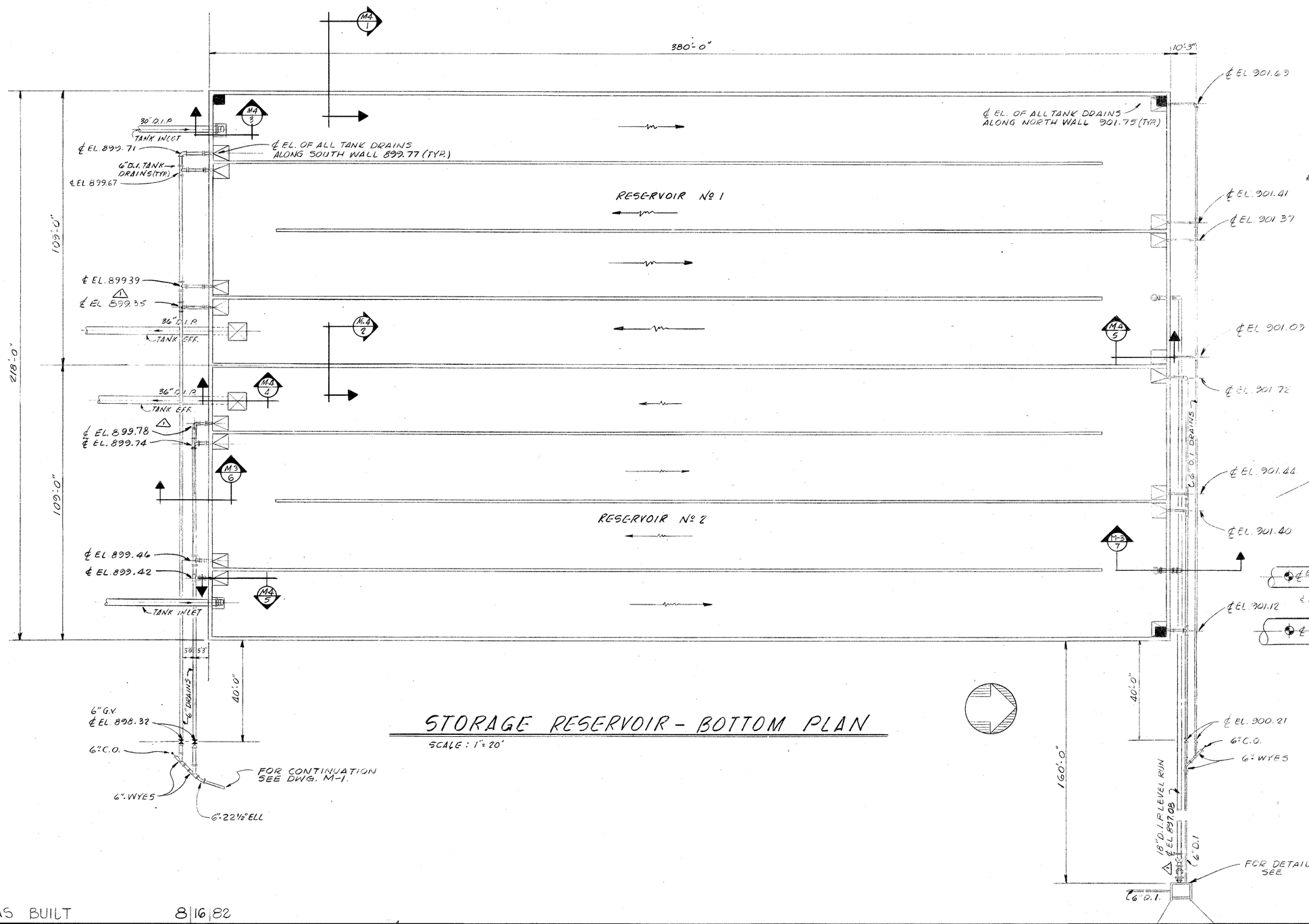

STORAGE RESERVOIR - BOTTOM PLAN

SCALE : 1" = 20'

SECTION M-3

SCALE : 1" = 6'-0" M-3 | 7

SECTION M-3

SCALE : 1" = 6'-0" M-3 | 6

AS BUILT 8|16|82

NO.	DESCRIPTION	BY	FIRM	DATE	BY	DATE
1	PRE-BID REVISIONS	FWS	F&S	7/79		
	REVISIONS	SUBMITTAL			BUREAU OF WATER APPROVAL	

CONSULTING ENGINEERS
SUBMITTED BY: [signature]
REG. ENGR. GA. NO. 10317 DATE 1-29-79
MADISON · MADISON · INTERNATIONAL / FLOOD & ASSOCIATES, INC.

CITY OF ATLANTA
BUREAU OF WATER
T. E. STALLWORTH, JR., DIRECTOR
APPROVED BY: [signature]
DATE: 3-15-79

CITY OF ATLANTA, GEORGIA

DEPARTMENT OF ENVIRONMENT & STREETS BUREAU OF WATER

WATER IMPROVEMENT PROGRAM

EAST SIDE HARTSFIELD INTERNATIONAL AIRPORT

WATER STORAGE AND PUMPING STATION

MADISON · MADISON · INTERNATIONAL / FLOOD & ASSOCIATES, INC.
CONSULTING ENGINEERING
Joint Venture
ATLANTA, GEORGIA

DESIGNED BY: C.V. CHECKED BY: C.V. DATE AUG. 1979
DRAWN BY: F.J. SCALE AS SHOWN

RESERVOIR PLAN & SECTIONS

PROJ. NO. 7733-1 SHEET NO. 9 OF 62

M-3

A.P. 7145

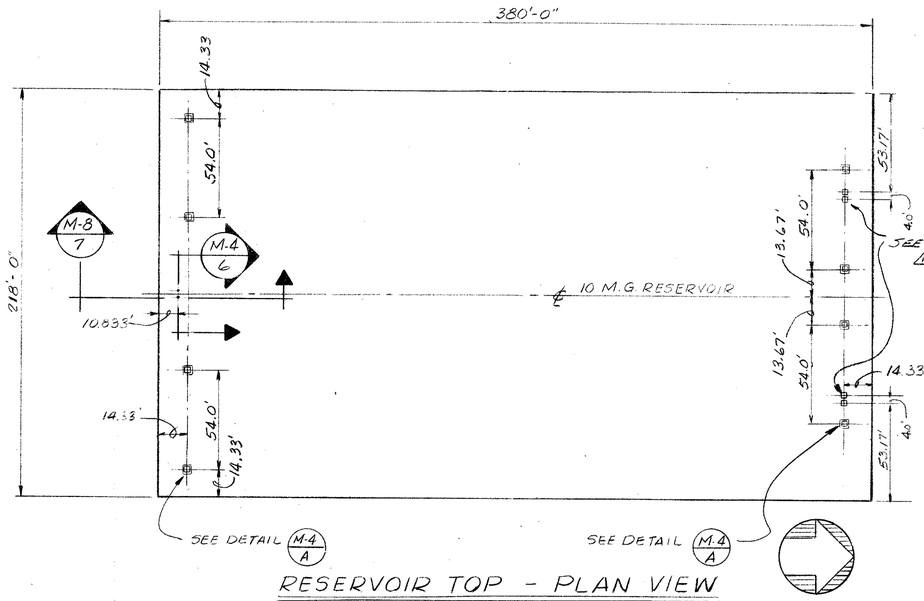

RESERVOIR TOP - PLAN VIEW

SCALE : 1" = 40'

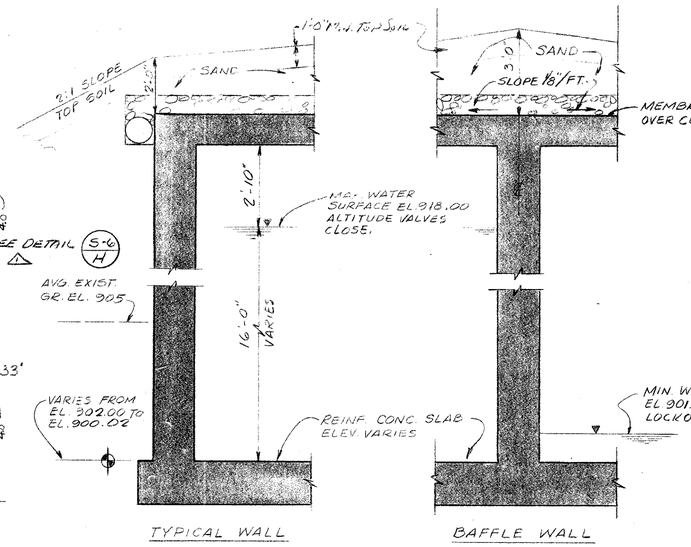

TYPICAL WALL

BAFFLE WALL

SECTION

SCALE: 3/8" = 1'-0"

M-4 / M.3 / 1

SECTION

SCALE: 3/8" = 1'-0"

M-4 / M.3 / 2

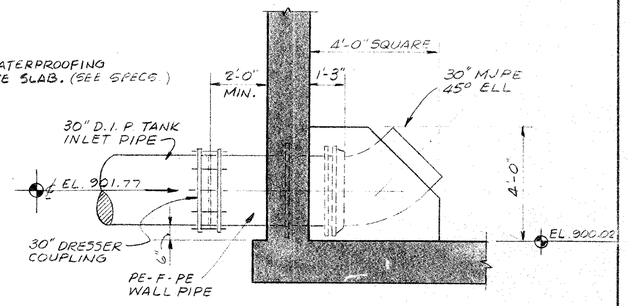

TANK INLET - SECTION

SCALE: 3/8" = 1'-0"

M-4 / M.3 / 3

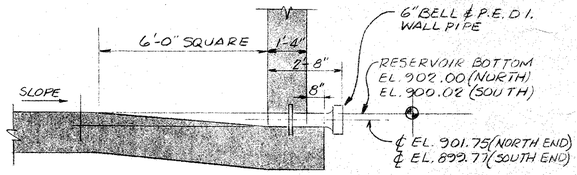

TANK DRAIN - SECTION

SCALE: 3/8" = 1'-0"

M-4 / M.3 / 5

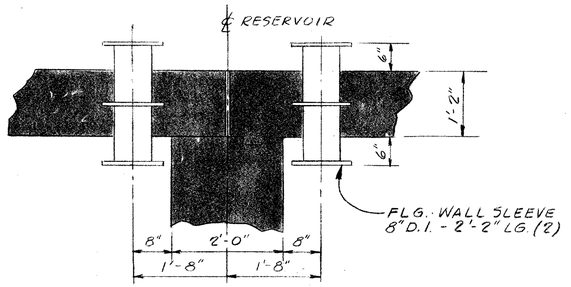

SECTION

SCALE: 3/4" = 1'-0"

M-4 / - / 6

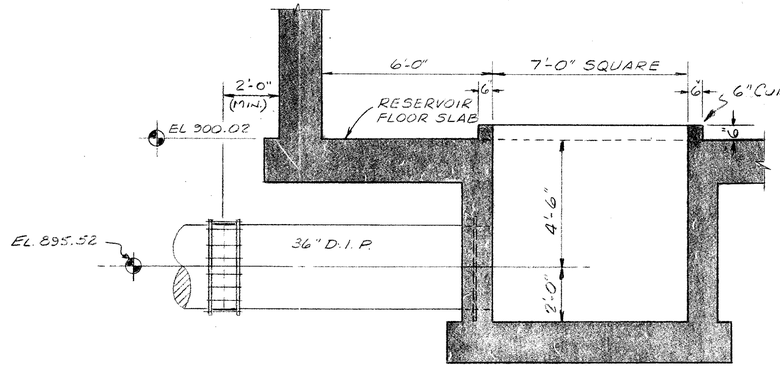

PUMP SUCTION - SECTION

SCALE: 3/8" = 1'-0"

M-4 / M-3 / 4

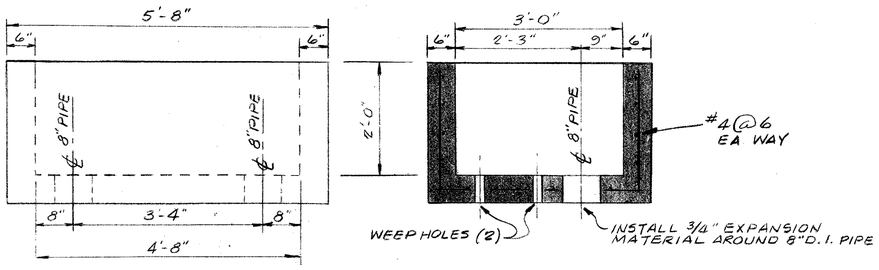

LEVEL CONTROL BOX

DETAIL

SCALE: 3/4" = 1'-0"

M-4 / M-8 / B

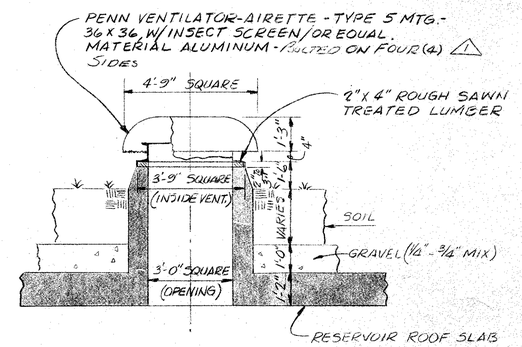

RESERVOIR ROOF VENTILATOR

DETAIL

SCALE: 3/8" = 1'-0"

M-4 / A

M-4

AS BUILT 8|16|82

NO.	DESCRIPTION	BY	FIRM	DATE	BY	DATE
	REVISIONS	SUBMITTAL			BUREAU OF WATER APPROVAL	
1	PRE-BID REVISIONS	FWS	F&S	7/79		

CONSULTING ENGINEERS
SUBMITTED BY: Charles Wingo
REG. ENGR. GA. NO. 10317 DATE 1-29-79
MADISON · MADISON · INTERNATIONAL / FLOOD & ASSOCIATES, INC.

CITY OF ATLANTA
BUREAU OF WATER
T.E. STALLWORTH, JR., DIRECTOR
APPROVED BY: T.E. Stallworth, Jr.
DATE: 3-15-79

CITY OF ATLANTA, GEORGIA

DEPARTMENT OF ENVIRONMENT & STREETS BUREAU OF WATER

WATER IMPROVEMENT PROGRAM

EAST SIDE HARTSFIELD INTERNATIONAL AIRPORT

WATER STORAGE AND PUMPING STATION

MADISON · MADISON · INTERNATIONAL / FLOOD & ASSOCIATES, INC.
CONSULTING ENGINEERING
Joint Venture
ATLANTA, GEORGIA

DESIGNED BY: C.V. CHECKED BY: C.V. DATE AUG. 1979
DRAWN BY: E.W. SCALE AS SHOWN

RESERVOIR DETAILS

PROJ. NO. 7733-1 SHEET NO. 10 OF 62

AF 7145

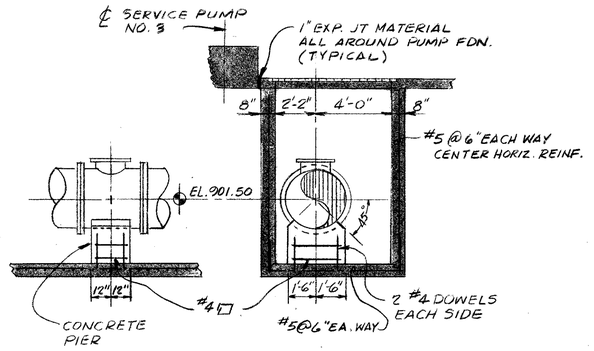

DETAIL (M-5 / A)
SCALE: 1/2"=1'-0"

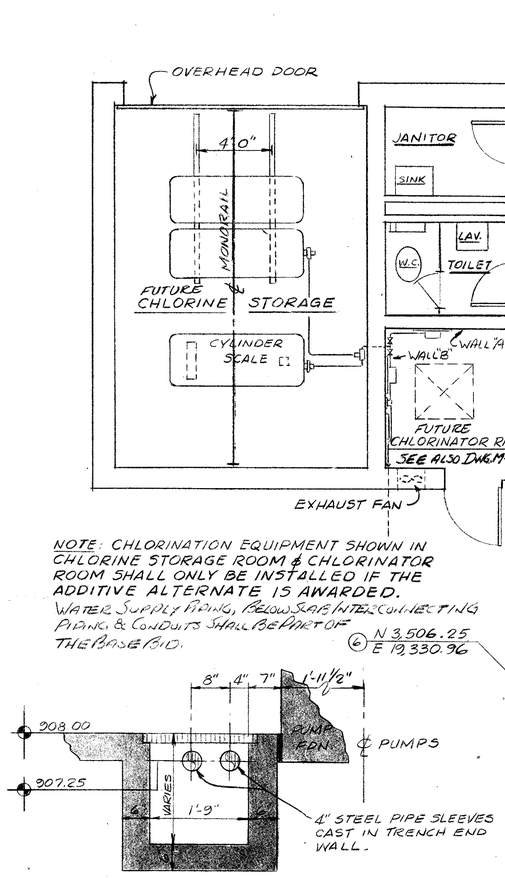

NOTE: CHLORINATION EQUIPMENT SHOWN IN CHLORINE STORAGE ROOM & CHLORINATOR ROOM SHALL ONLY BE INSTALLED IF THE ADDITIVE ALTERNATE IS AWARDED. WATER SUPPLY PIPING, BELOW SLAB, INTERCONNECTING PIPING & CONDUITS SHALL BE PART OF THE BASE BID.

SECTION (M-5 / 1)
SCALE: 3/4"=1'-0"

PUMPING STATION FLOOR PLAN
SCALE: 1/4" = 1'-0"

AS BUILT 8/16/82

M-5

NO.	DESCRIPTION	BY	FIRM	DATE	BY	DATE
	REVISIONS	SUBMITTAL			BUREAU OF WATER APPROVAL	
4	CORRECTIONS TO REV. 3	FWS	F&A	3/80		
3	REVISED PER PUMP SHOP DWG.	FWS	F&A	2/80		
2	REVISED PER PIPING SHOP DWG.	FWS	F&A	2/80		
1	PRE-BID REVISIONS	FWS	F&S.	7/79		

CONSULTING ENGINEERS
SUBMITTED BY: [signature]
REG. ENGR. GA. NO. 10317 DATE 1-29-79
MADISON · MADISON · INTERNATIONAL / FLOOD & ASSOCIATES, INC.

CITY OF ATLANTA
BUREAU OF WATER
T. E. STALLWORTH, JR., DIRECTOR
APPROVED BY: [signature]
DATE: 3-15-79

CITY OF ATLANTA, GEORGIA
DEPARTMENT OF ENVIRONMENT & STREETS BUREAU OF WATER
WATER IMPROVEMENT PROGRAM
EAST SIDE HARTSFIELD INTERNATIONAL AIRPORT
WATER STORAGE AND PUMPING STATION

MADISON · MADISON · INTERNATIONAL / FLOOD & ASSOCIATES, INC.
CONSULTING ENGINEERING
Joint Venture
ATLANTA, GEORGIA

DESIGNED BY: C.V. | CHECKED BY: C.V. | DATE AUG. 1979
DRAWN BY: E.W. | SCALE AS SHOWN

PUMPING STATION FLOOR PLAN

PROJ. NO. 7733-1 | SHEET NO. 11 OF 62

AF 7145

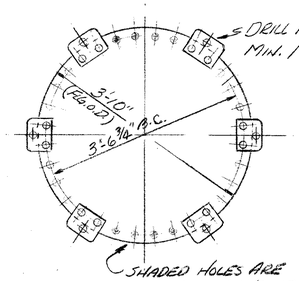

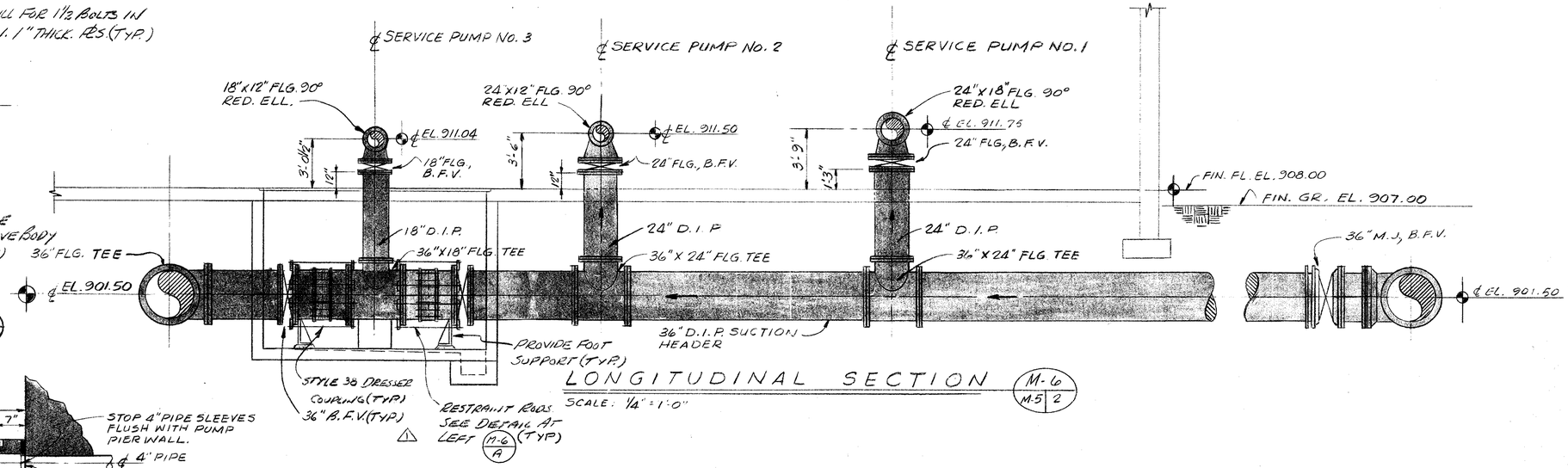

DETAIL RESTRAINT RODS (M-6 / - / A) ⚠1

SCALE: 3/4" = 1'-0"

LONGITUDINAL SECTION (M-6 / M-5 / 2)

SCALE: 1/4" = 1'-0"

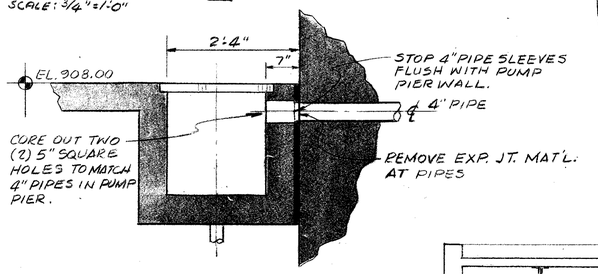

SECTION (M-6 / M-5 / 3)

SCALE: 3/4" = 1'-0"

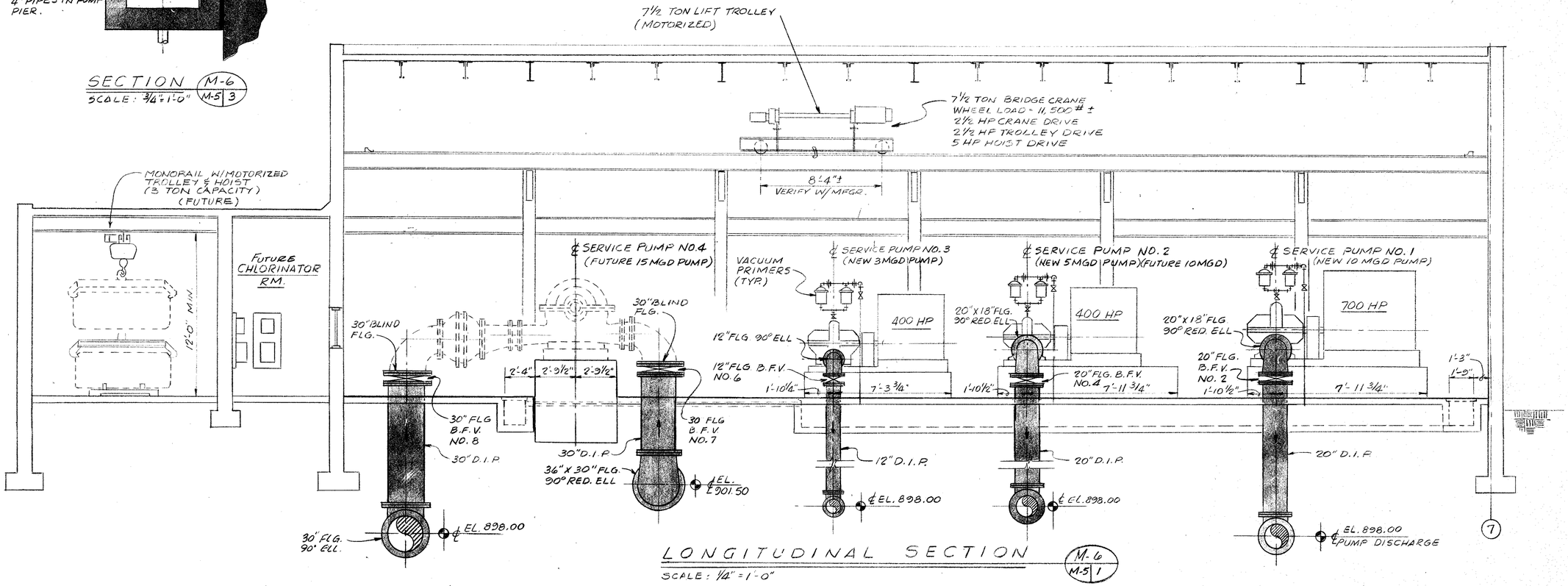

LONGITUDINAL SECTION (M-6 / M-5 / 1)

SCALE: 1/4" = 1'-0"

AS BUILT 8/16/82

M-6

NO.	DESCRIPTION	BY	FIRM	DATE	BY	DATE
	REVISIONS	SUBMITTAL			BUREAU OF WATER APPROVAL	
⚠	PRE-BID REVISIONS	FWS	FES	7/79		

CONSULTING ENGINEERS
SUBMITTED BY: [signature]
REG. ENGR. GA. NO. 10317 DATE 1-29-79
MADISON · MADISON · INTERNATIONAL / FLOOD & ASSOCIATES, INC.

CITY OF ATLANTA
BUREAU OF WATER
T. E. STALLWORTH, JR., DIRECTOR
APPROVED BY: [signature]
DATE: 3-19-79

CITY OF ATLANTA, GEORGIA

DEPARTMENT OF ENVIRONMENT & STREETS BUREAU OF WATER

WATER IMPROVEMENT PROGRAM

EAST SIDE HARTSFIELD INTERNATIONAL AIRPORT

WATER STORAGE AND PUMPING STATION

MADISON · MADISON · INTERNATIONAL / FLOOD & ASSOCIATES, INC.
CONSULTING ENGINEERING
Joint Venture
ATLANTA, GEORGIA

DESIGNED BY: C.V. CHECKED BY: C.V. DATE AUG. 1979
DRAWN BY: E.W. SCALE AS SHOWN

PUMPING STATION
LONGITUDINAL SECTIONS

PROJ. NO. 7733-1 SHEET NO. 12 OF 62

A.F. 7145

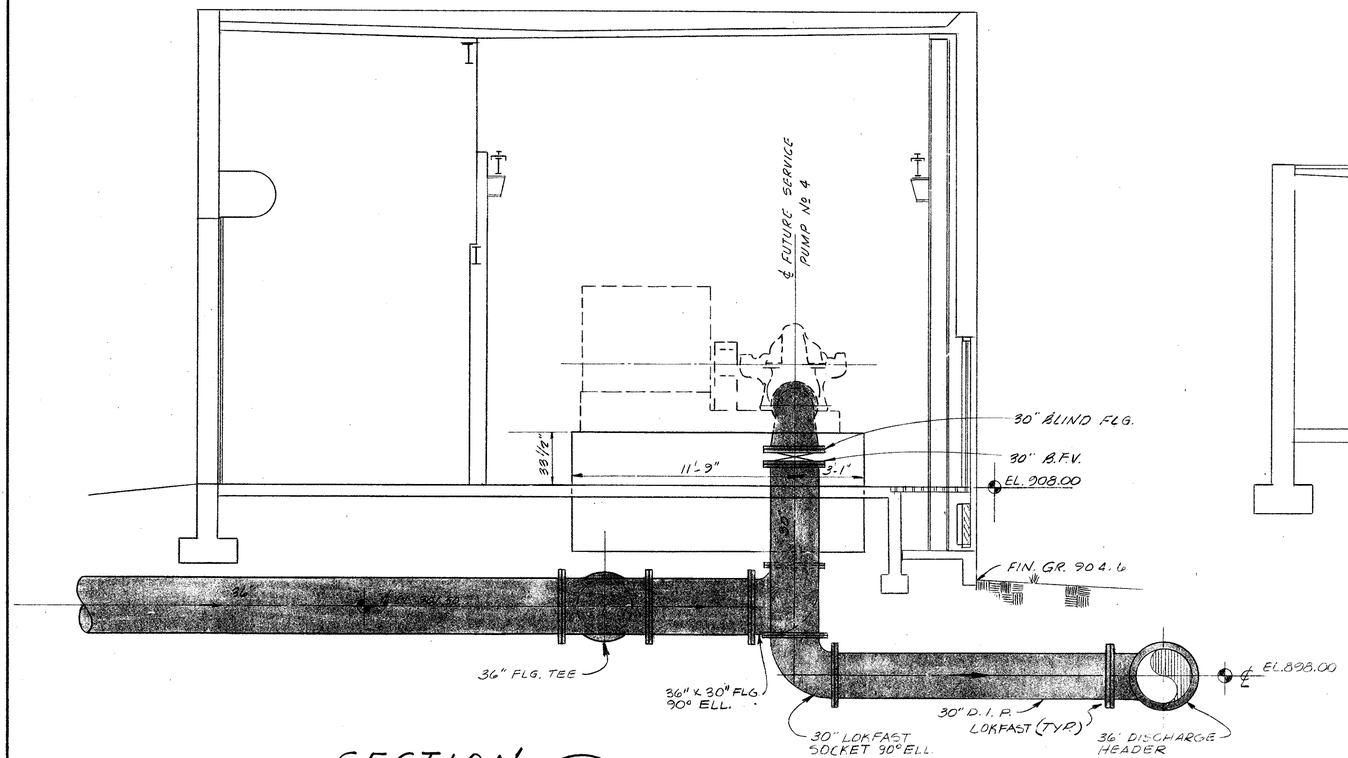

SECTION (M-7 / M-5 | 1)

SCALE: 1/4" = 1'-0"

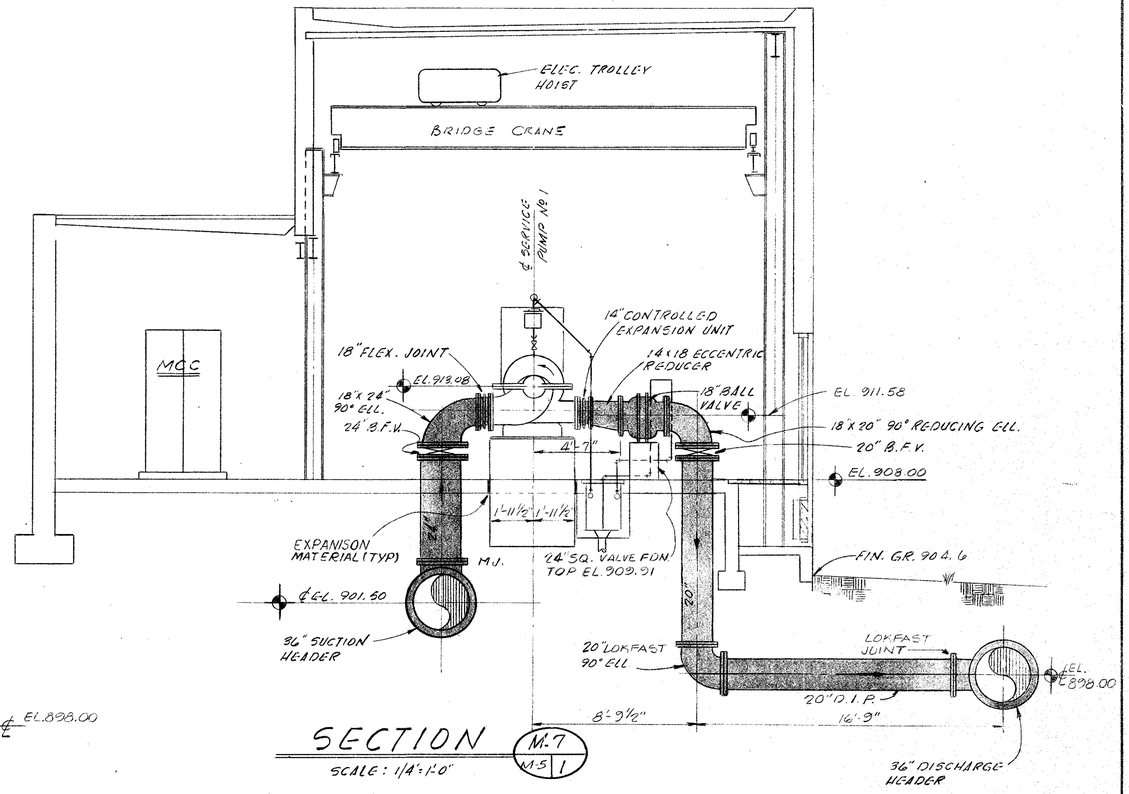

SECTION (M-7 / M-5 | 2)

SCALE: 1/4" = 1'-0"

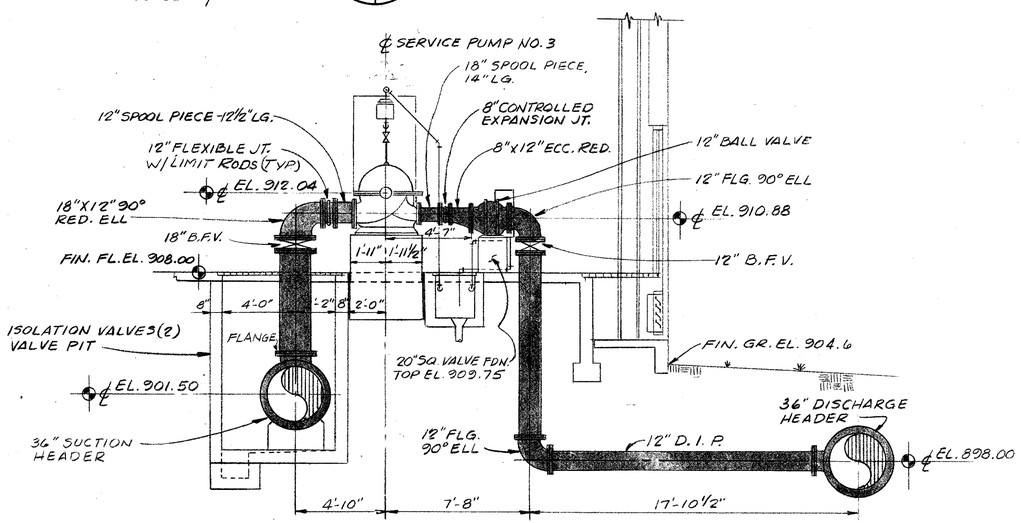

SECTION (M-7 / M-5 | 3)

SCALE: 1/4" = 1'-0"

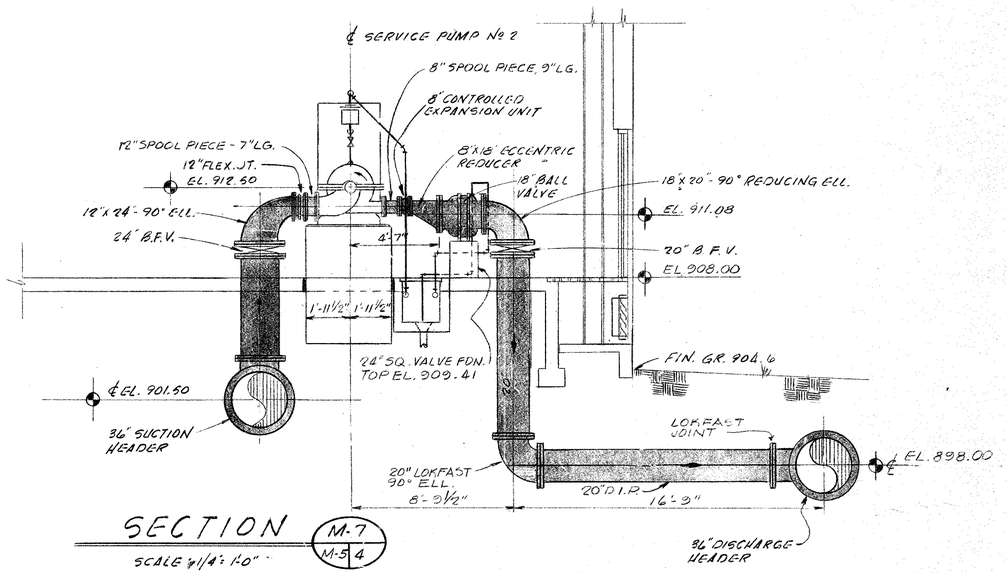

SECTION (M-7 / M-5 | 4)

SCALE: 1/4" = 1'-0"

M-7

AS BUILT 8|16|82

NO.	DESCRIPTION	BY	FIRM	DATE	BY	DATE
	REVISIONS	SUBMITTAL			BUREAU OF WATER APPROVAL	

CONSULTING ENGINEERS
SUBMITTED BY: [signature]
REG. ENGR. GA. NO. 10317 DATE 1-29-79
MADISON · MADISON · INTERNATIONAL / FLOOD & ASSOCIATES, INC.

CITY OF ATLANTA
BUREAU OF WATER
T. E. STALLWORTH, JR. DIRECTOR
APPROVED BY: [signature]
DATE: 3-15-79

CITY OF ATLANTA, GEORGIA

DEPARTMENT OF ENVIRONMENT & STREETS BUREAU OF WATER

WATER IMPROVEMENT PROGRAM

EAST SIDE HARTSFIELD INTERNATIONAL AIRPORT
WATER STORAGE AND PUMPING STATION

MADISON · MADISON · INTERNATIONAL / FLOOD & ASSOCIATES, INC.
CONSULTING ENGINEERING
Joint Venture
ATLANTA, GEORGIA

DESIGNED BY: C. V. | CHECKED BY: C. V. | DATE: AUG. 1979
DRAWN BY: A. J. S. | SCALE: AS SHOWN

PUMPING STATION
TRANSVERSE SECTIONS

PROJ. NO. 7733-1 | SHEET NO. 13 OF 62

AF 7145

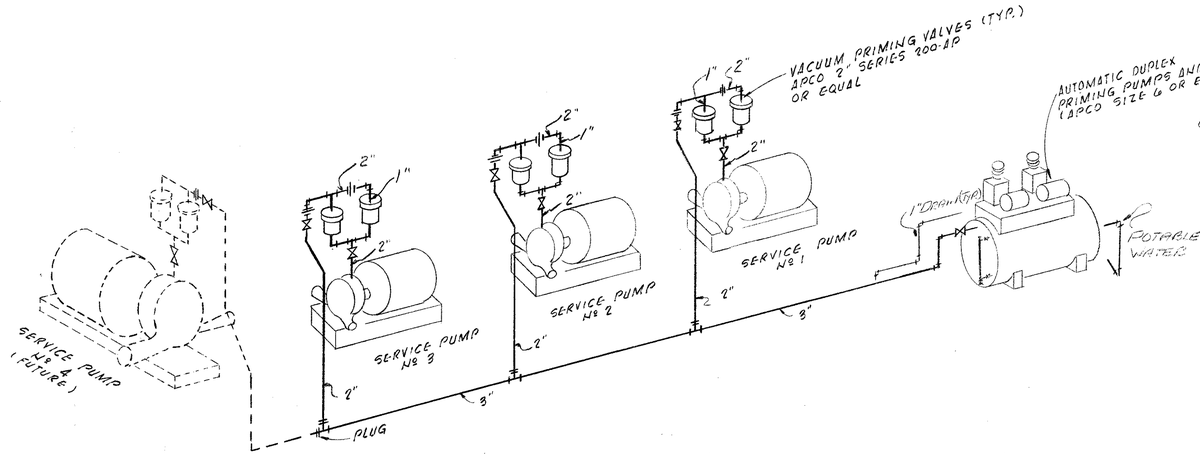

SCHEMATIC VACUUM PRIMER SYSTEM (M-8 - A)

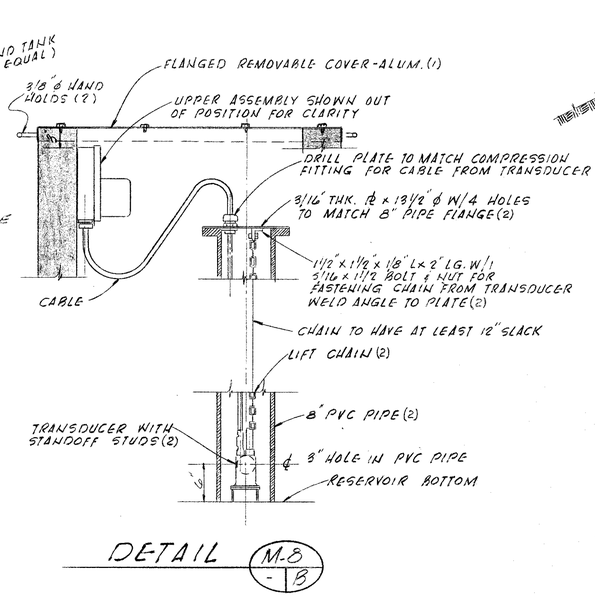

DETAIL (M-8 - B)

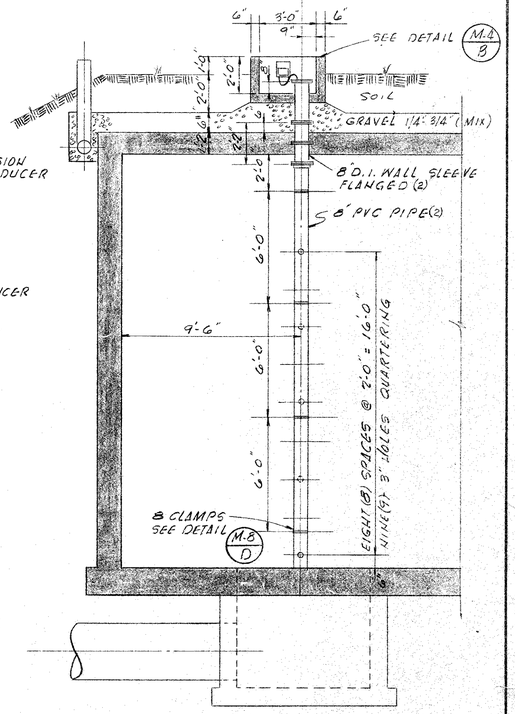

SECTION & DETAIL LEVEL CONTROL ARRGT. (M-8 M4 7)

SCALE: 1/4" = 1'-0"

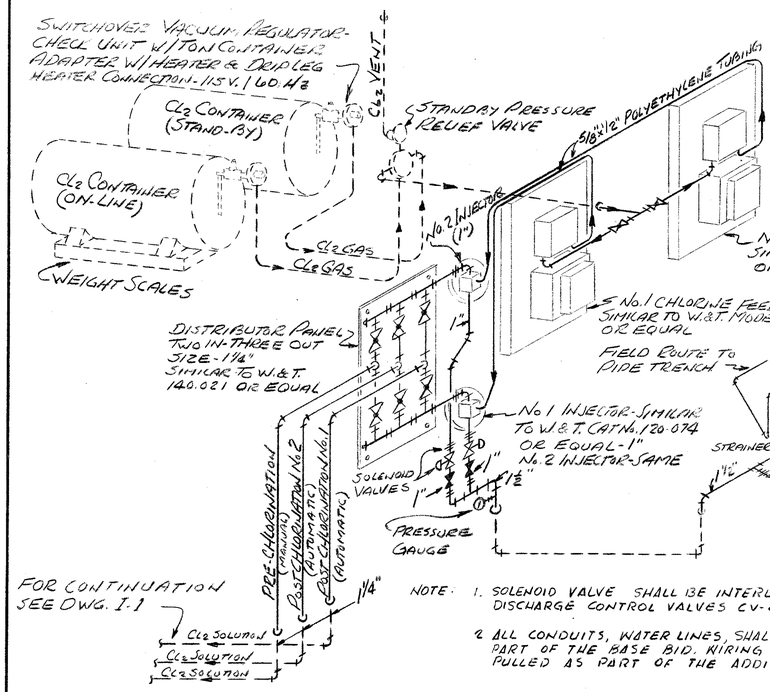

NOTE: 1. SOLENOID VALVE SHALL BE INTERLOCKED TO OPEN WHEN DISCHARGE CONTROL VALVES CV-4 & CV-7 OPEN.

2. ALL CONDUITS, WATER LINES, SHALL BE INSTALLED AS PART OF THE BASE BID. WIRING SHALL BE PROVIDED & PULLED AS PART OF THE ADDITIVE ALTERNATE

SCHEMATIC CHLORINATION SYSTEM-FUTURE (M-8 - C)

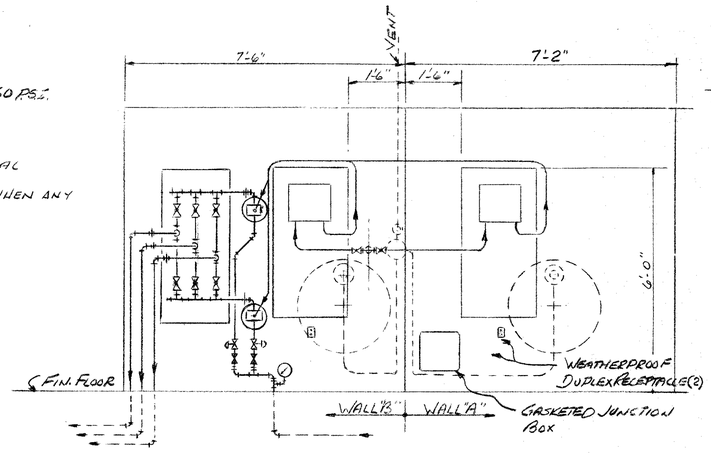

FUTURE - CHLORINATION PIPING DETAIL (M-8 - E)

SCALE: - 1/2" = 1'-0"

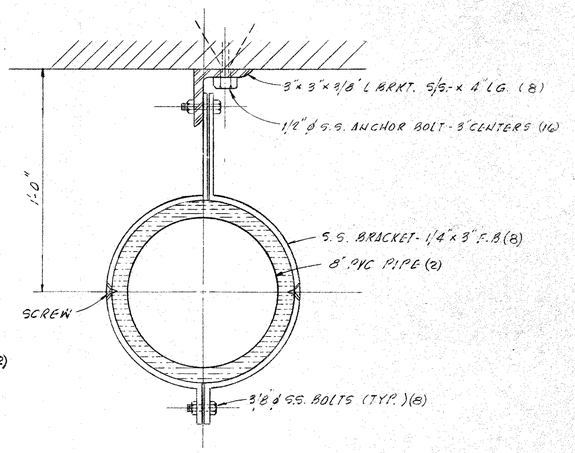

DETAIL (M-8 - D)

SCALE: 3" = 1'-0"

M-8

AS - BUILT 8/16/82

NO.	DESCRIPTION	BY	FIRM	DATE	BY	DATE
	REVISIONS	SUBMITTAL			BUREAU OF WATER APPROVAL	

CONSULTING ENGINEERS
SUBMITTED BY: [signature]
REG. ENGR. GA. NO. 10317 DATE 1-29-79
MADISON · MADISON · INTERNATIONAL / FLOOD & ASSOCIATES, INC.

CITY OF ATLANTA
BUREAU OF WATER
T. E. STALLWORTH, JR., DIRECTOR
APPROVED BY: [signature]
DATE: 3-15-79

CITY OF ATLANTA, GEORGIA
DEPARTMENT OF ENVIRONMENT & STREETS BUREAU OF WATER
WATER IMPROVEMENT PROGRAM
EAST SIDE HARTSFIELD INTERNATIONAL AIRPORT
WATER STORAGE AND PUMPING STATION

MADISON · MADISON · INTERNATIONAL / FLOOD & ASSOCIATES, INC.
CONSULTING ENGINEERING
Joint Venture
ATLANTA, GEORGIA

DESIGNED BY: C.V. CHECKED BY: C.V. DATE AUG. 1979
DRAWN BY: A.J.S. SCALE AS SHOWN

VACUUM PRIMING AND CHLORINATION SYSTEMS

PROJ. NO. 7733-1 SHEET NO. 14 OF 62

AF 7145

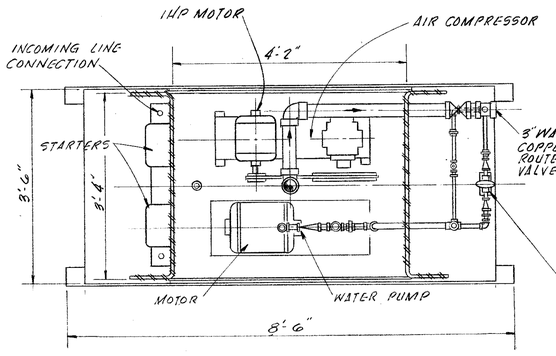

PLAN VIEW BELOW TANK

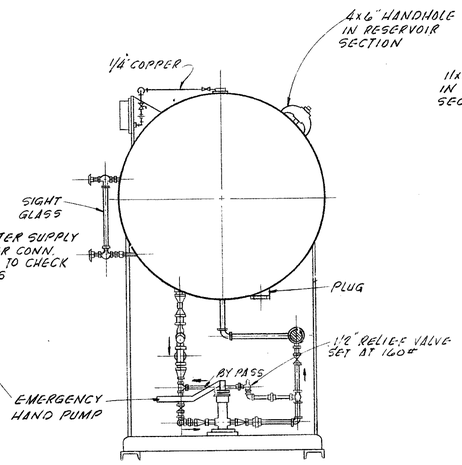

LEFT END VIEW

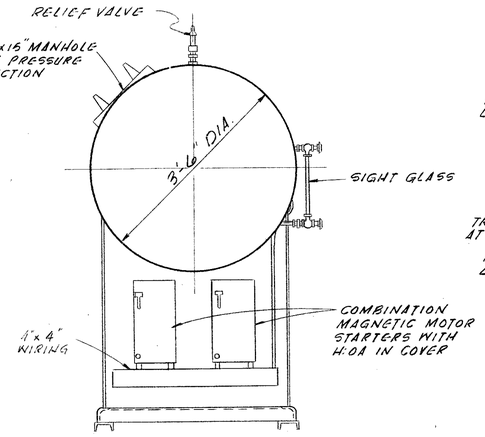

RIGHT END VIEW

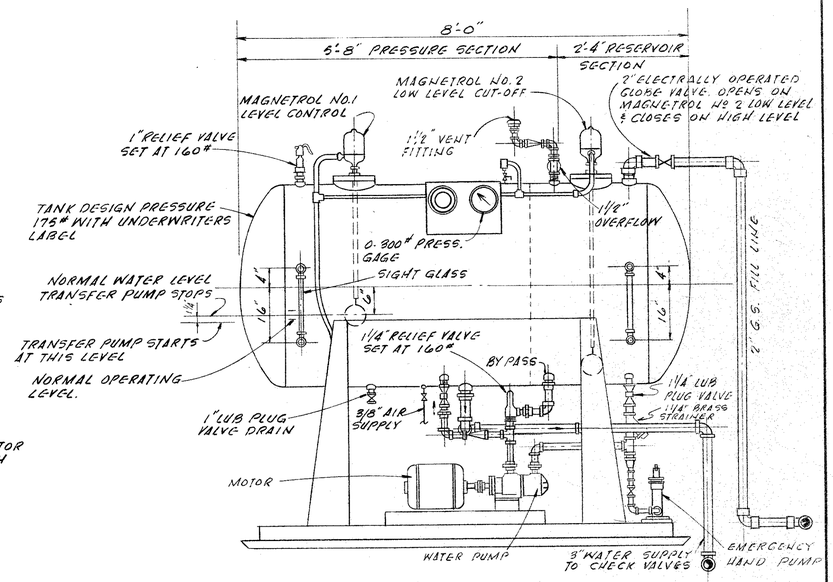

FRONT ELEVATION VIEW

HYDRO-PNEUMATIC ACCUMULATOR DETAIL (M-9 / M-9 A)

SCALE: 3/4" = 1'-0"

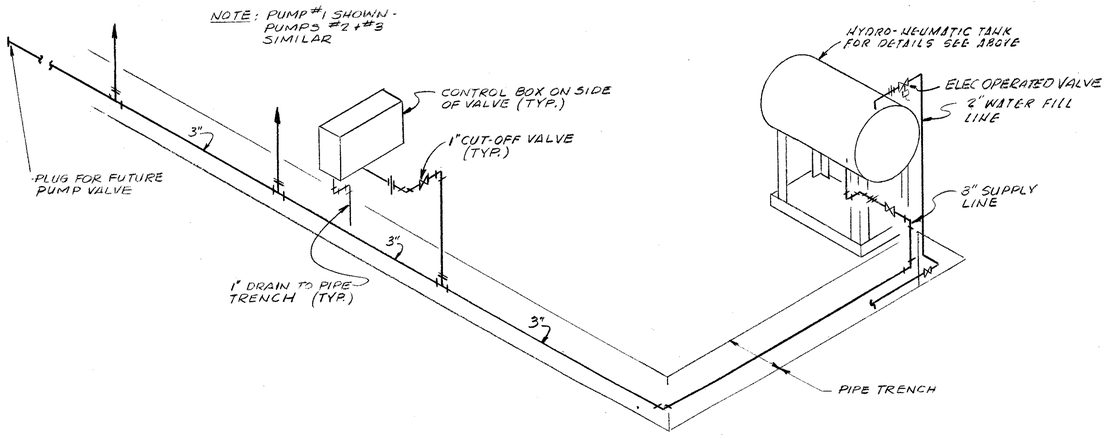

HYDRO-PNEUMATIC ACCUMULATOR PIPING SCHEMATIC (M-9 / B)

N.T.S.

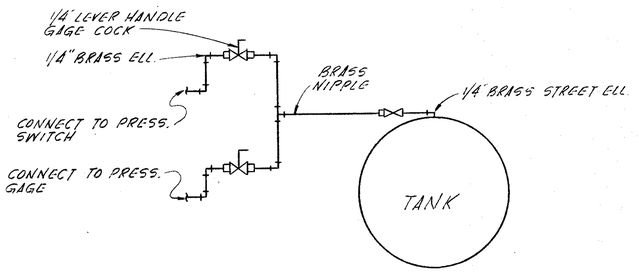

GAGE PIPING SCHEMATIC (M-9 / C)

N.T.S.

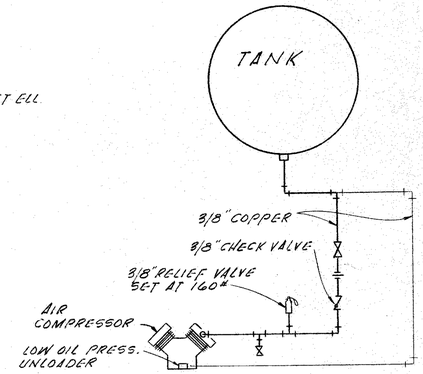

AIR COMPRESSOR PIPING SCHEMATIC (M-9 / D)

N.T.S.

M-9

AS BUILT 8/16/82

NO.	DESCRIPTION	BY	FIRM	DATE	BY	DATE
	REVISIONS	SUBMITTAL			BUREAU OF WATER APPROVAL	

CONSULTING ENGINEERS
SUBMITTED BY:
REG. ENGR. GA. NO. 10317 DATE 1-29-79
MADISON · MADISON · INTERNATIONAL / FLOOD & ASSOCIATES, INC.

CITY OF ATLANTA
BUREAU OF WATER
T.E. STALLWORTH, JR., DIRECTOR
APPROVED BY:
DATE: 3-15-79

CITY OF ATLANTA, GEORGIA
DEPARTMENT OF ENVIRONMENT & STREETS BUREAU OF WATER
WATER IMPROVEMENT PROGRAM
EAST SIDE HARTSFIELD INTERNATIONAL AIRPORT
WATER STORAGE AND PUMPING STATION

MADISON · MADISON · INTERNATIONAL / FLOOD & ASSOCIATES, INC.
CONSULTING ENGINEERING
Joint Venture
ATLANTA, GEORGIA

DESIGNED BY: C.V. CHECKED BY: C.V. DATE AUG 1979
DRAWN BY: A.J.S. SCALE AS SHOWN

HYDRO-PNEUMATIC SYSTEM

PROJ. NO. 7733-1 SHEET NO. 15 OF 62

AF 7145

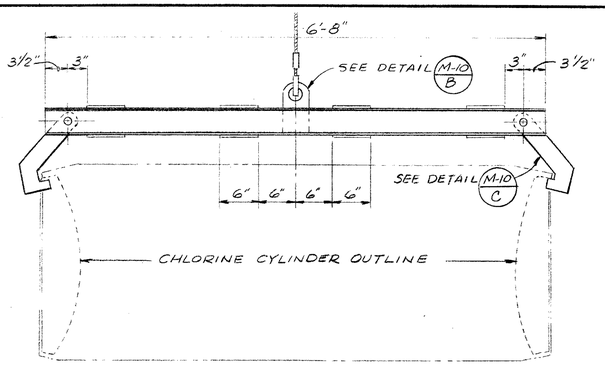

FUTURE-LIFTING YOKE - DETAIL M-10 A

SCALE: 1" = 1'-0"

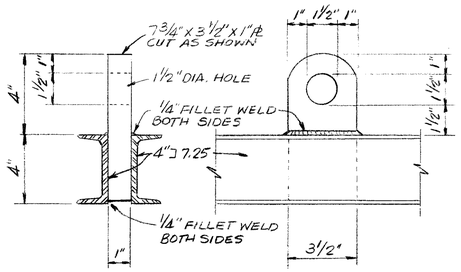

LIFTING EYE - DETAIL M-10 B

N.T.S.

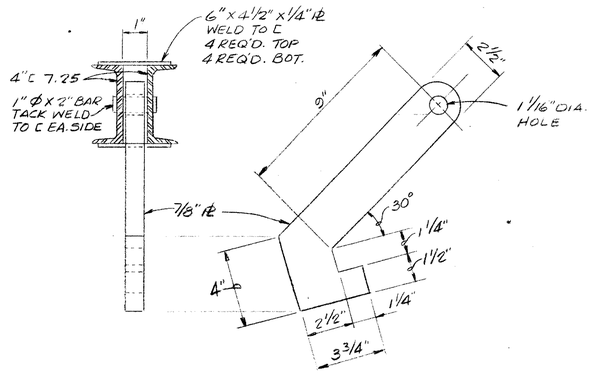

HOOK DETAIL M-10 C

N.T.S.

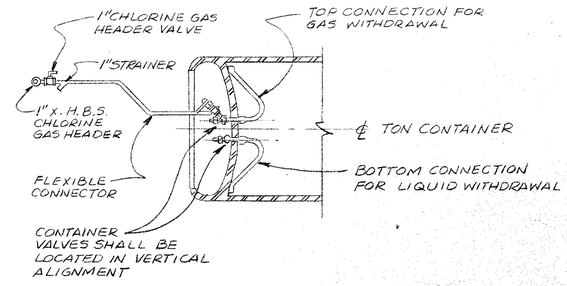

FUTURE - PIPING CONNECTION DETAIL M-10 D

N.T.S.

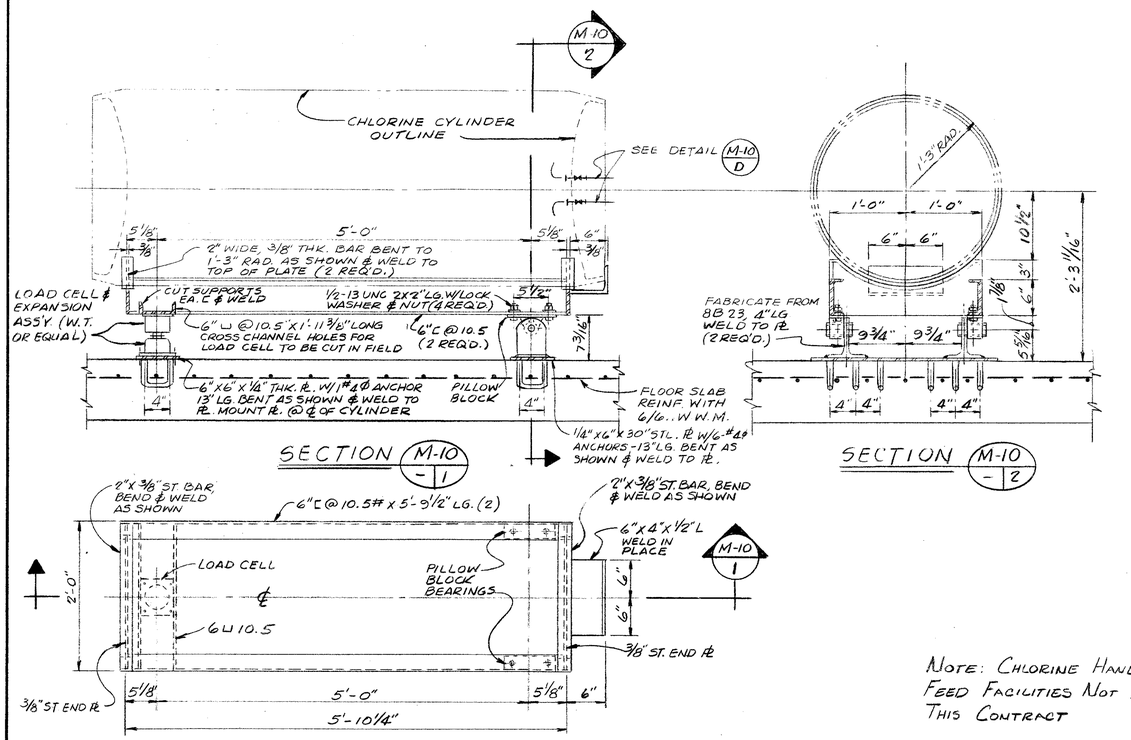

SECTION M-10 - 1

SECTION M-10 - 2

PLAN - CHLORINE CYLINDER SCALE - FUTURE

DETAIL M-10 E

SCALE: 1" = 1'-0"

NOTE: CHLORINE HANDLING AND FEED FACILITIES NOT INCLUDED IN THIS CONTRACT

NOTE: ONE REEL PER HOSE STATION REQUIRED.

HOSE STATION & REEL DETAIL M-10 F

SCALE: 1½" = 1'-0"

M-10

AS BUILT 8/16/82

NO.	DESCRIPTION	BY	FIRM	DATE	BY	DATE
	REVISIONS	SUBMITTAL			BUREAU OF WATER APPROVAL	

CONSULTING ENGINEERS
SUBMITTED BY: [signature]
REG. ENGR. GA. NO. 10317 DATE 1-29-79
MADISON · MADISON · INTERNATIONAL / FLOOD & ASSOCIATES, INC.

CITY OF ATLANTA
BUREAU OF WATER
T. E. STALLWORTH, JR., DIRECTOR
APPROVED BY: [signature]
DATE: 3-15-79

CITY OF ATLANTA, GEORGIA

DEPARTMENT OF ENVIRONMENT & STREETS BUREAU OF WATER

WATER IMPROVEMENT PROGRAM

EAST SIDE HARTSFIELD INTERNATIONAL AIRPORT WATER STORAGE AND PUMPING STATION

MADISON · MADISON · INTERNATIONAL / FLOOD & ASSOCIATES, INC.
CONSULTING ENGINEERING
Joint Venture
ATLANTA, GEORGIA

DESIGNED BY: C.V. CHECKED BY: C.V. DATE AUG. 1979
DRAWN BY: E.W. SCALE AS SHOWN

FUTURE
CHLORINATION EQUIPMENT AND MISCELLANEOUS DETAILS

PROJ. NO. 7733-1 SHEET NO. 16 OF 62

AF 7145

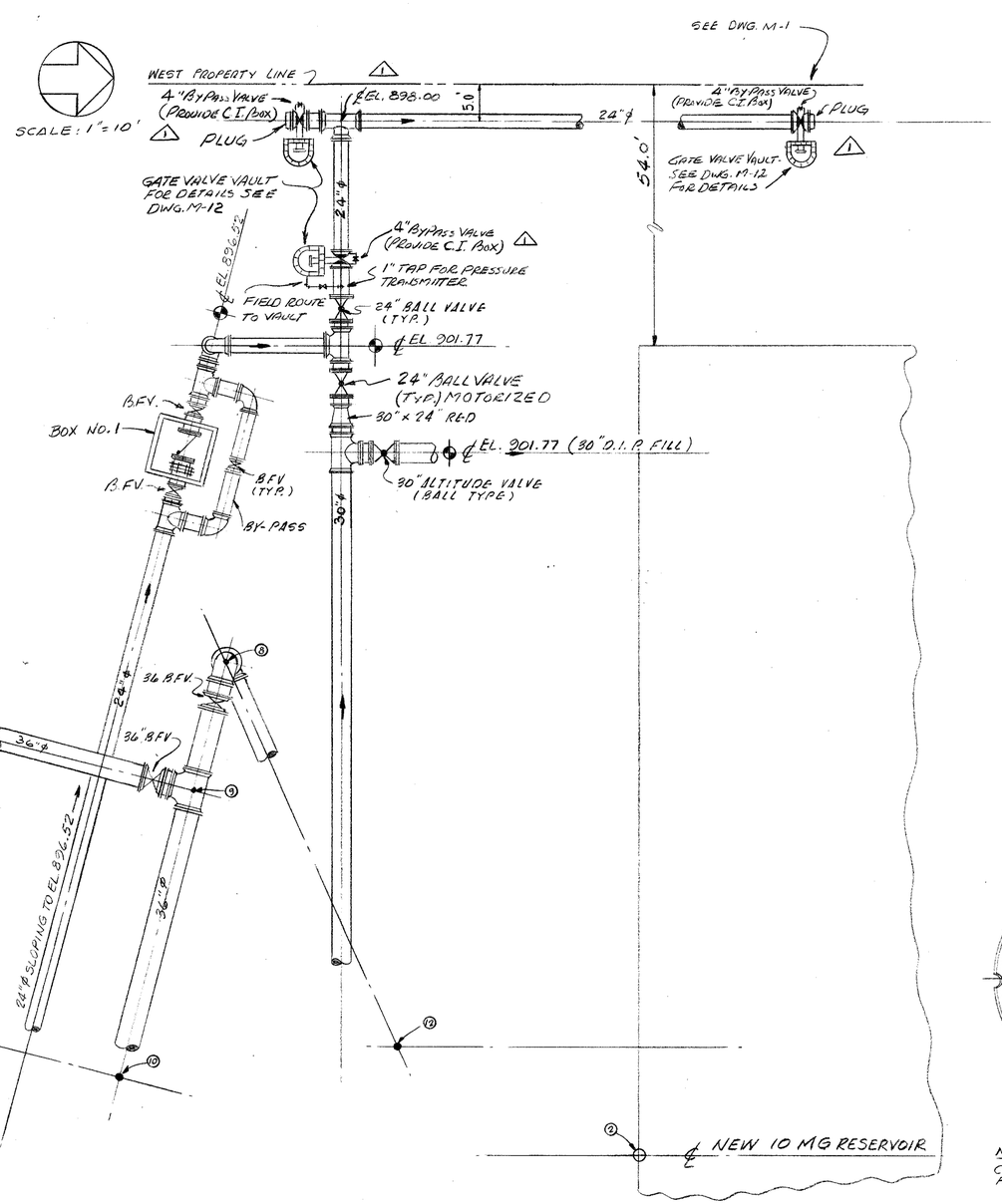

ADDITIONAL PIPING - DETAIL (M-11/A)

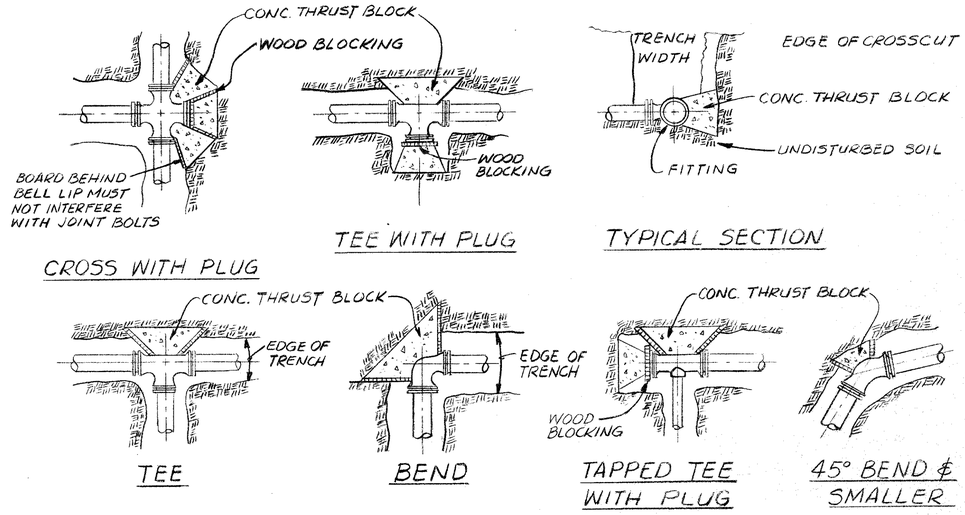

NOTE:

1. THRUST BLOCKS SHALL BE REQUIRED AGAINST UNDISTURBED MATERIAL. WHERE TRENCH WALL HAS BEEN DISTURBED, EXCAVATE ALL LOOSE MATERIAL AND EXTEND THRUST BLOCK TO UNDISTURBED MATERIAL.
2. EXTEND THRUST BLOCK FULL LENGTH ON TEES AND BENDS, PUT BOARD IN FRONT OF PLUG BEFORE POURING CONCRETE THRUST BLOCK
3. BACKFILL SHALL CONSIST ENTIRELY OF CLEAN SAND AND ROCK FRAGMENTS. ANY MUCK ENCOUNTERED SHALL BE REPLACED WITH ACCEPTABLE BACKFILL.
4. ALL WOOD BLOCKING SHALL BE PRESSURE TREATED.
5. CONCRETE FOR THRUST BLOCKING TO BE CLASS "C."
6. THRUST BLOCK END AREA IN SQ. FT. SHALL BE DETERMINED BY THE FOLLOWING FORMULA:

$$A = \frac{0.785 \times D^2 \times P}{2500}$$

A = END AREA REQ'D. IN SQ. FT.; D = PIPE DIA. IN INCHES
P = LINE PRESSURE IN PSI; 0.785 = CONSTANT; 2500 = SOIL BEARING VALUE

THRUST BLOCK DETAILS

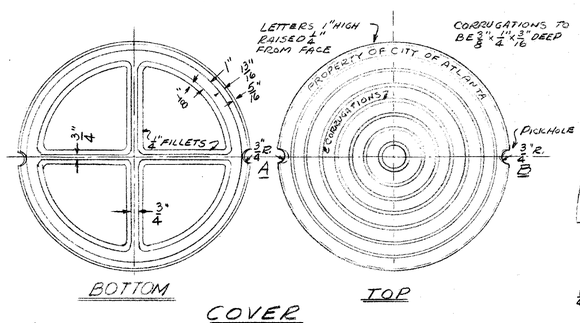

NOTE:- COVER AND FRAME MUST BE FITTED BEFORE LEAVING SHOP.

COVER
SCALE - NTS

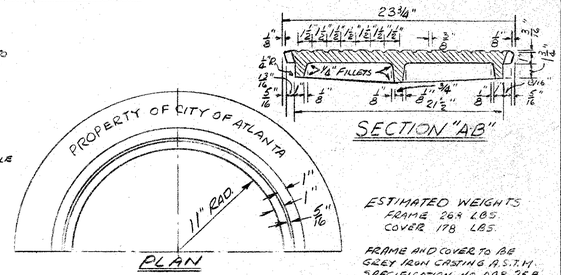

DETAILS SANITARY MANHOLE (1)

(M-11)

AS BUILT 8|16|82

NO.	DESCRIPTION	BY	FIRM	DATE	BY	DATE
	REVISIONS	SUBMITTAL			BUREAU OF WATER APPROVAL	
1	PRE-BID REVISIONS	FWS	F&A	7/79		

CONSULTING ENGINEERS
SUBMITTED BY: Clark Langston
REG. ENGR. GA. NO. 10317 DATE 1-29-79
MADISON · MADISON · INTERNATIONAL / FLOOD & ASSOCIATES, INC.

CITY OF ATLANTA
BUREAU OF WATER
T.E. STALLWORTH, JR., DIRECTOR
APPROVED BY: T.E. Stallworth Jr.
DATE: 3-13-79

CITY OF ATLANTA, GEORGIA
DEPARTMENT OF ENVIRONMENT & STREETS BUREAU OF WATER
WATER IMPROVEMENT PROGRAM
EAST SIDE HARTSFIELD INTERNATIONAL AIRPORT
WATER STORAGE AND PUMPING STATION

MADISON · MADISON · INTERNATIONAL / FLOOD & ASSOCIATES, INC.
CONSULTING ENGINEERING
Joint Venture
ATLANTA, GEORGIA

DESIGNED BY: D.R. CHECKED BY: C.V. DATE AUG. 1979
DRAWN BY: E.B.W. SCALE AS SHOWN

PUMPING STATION
PIPING DETAILS

PROJ. NO. 7733-1 SHEET NO. 17 OF 62

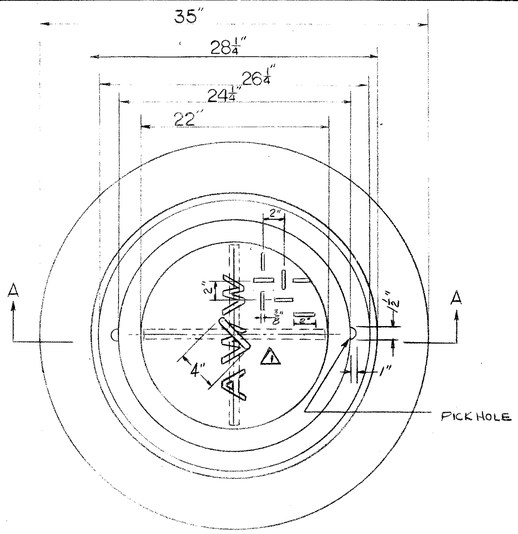

PLAN

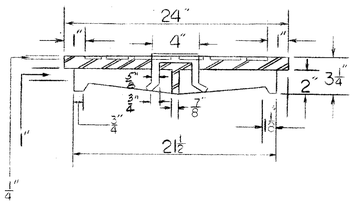

SECTION-A- COVER

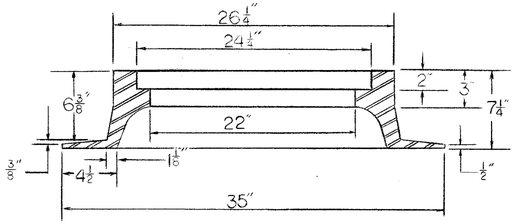

SECTION - A - FRAME

NOTES FOR MANHOLE FRAME & COVER ASSEMBLY:

1. UNLESS OTHERWISE NOTED, CAST IRON SHALL CONFORM TO A.S.T.M. SPECIFICATIONS A48 LATEST REVISION FOR CLASS 20 GREY IRON CASTINGS.
2. CASTINGS SHALL BE TRUE AND FREE OF HOLES. THEY SHALL BE CLEANED ACCORDING TO GOOD FOUNDRY PRACTICE, CHIPPED AND GROUND AS NEEDED TO REMOVE FINS AND ROUGH PLACES.
3. FINISHED CASTINGS SHALL BE COATED INSIDE AND OUTSIDE WITH COAL TAR PITCH VARNISH AS INDICATED IN A.W.W.A. SPECIFICATIONS C110 LATEST REVISION. COATING MAY BE APPLIED COLD AND SHALL BE SMOOTH, GLOSSY, NOT BRITTLE WHEN COLD, NOT STICKY WHEN EXPOSED TO THE SUN, AND SHALL ADHERE TO THE METAL AT ALL TEMPERATURES.
4. WHEN COATING IS COMPLETE, LID SHALL FIT SNUGLY WITHOUT ROCKING.

MANHOLE FRAME AND COVER ASSEMBLY

M-12 A

AS BUILT 8|16|82

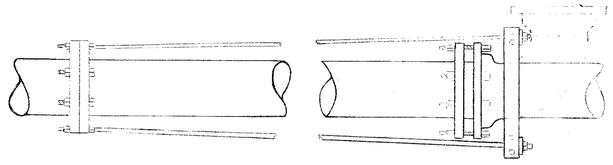

FLANGE TO MECH. JT. ANCHOR

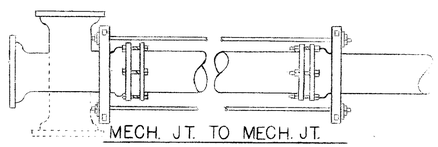

MECH. JT. TO MECH. JT. ANCHOR (PIPE OR FITTING)

TYPICAL TIE-ROD ANCHOR

M-12 B

NOTES FOR TYPICAL TIE-ROD ANCHOR:

1. IN THE ASSEMBLIES OF RODS AND CLAMPS SHOWN, RODS RUN FROM A LUG ON THE FITTING (OR A CLAMP BEHIND THE HUB OF A BELL) TO A CLAMP AGAINST THE FACE OF A BELL NOTE THAT THIS ARRANGEMENT ANCHORS ONLY ONE JOINT. THE STABILITY OF THE JOINT WHERE THE CLAMP IS AGAINST THE FACE OF THE BELL DEPENDS ON HAVING SOIL ABOVE A RELATIVELY LONG PIECE OF PIPE ON BOTH SIDES OF THE JOINT. CONSEQUENTLY, IF THE DISTANCE BETWEEN THE FIRST AND SECOND JOINT IS LESS THAN 12 FEET, THE SECOND JOINT SHOWN SHALL BE ANCHORED BY A CLAMP BEHIND THE HUB OF THE BELL AND RODS TO A CLAMP AT THE FACE OF THE NEXT BELL
2. IN THE ASSEMBLIES SHOWN FOR RODS TO FLANGED FITTINGS, NOTE THAT THE FLANGED FITTING IS NOT TO BE BURIED IN SOIL.
3. AFTER INSTALLATION TIE RODS AND CLAMP ASSEMBLY SHALL BE THOROUGHLY COVERED WITH ROYSTON LABORATORIES INC. ROSKOTE MASTIC NO. A939 OR KOPPERS CO., INC. BITUMASTIC SUPERSERVICE BLACK OF APPROVED EQUIVALENT.
4. RODS TO BE HIGH TENSILE, HOT ROLLED STEEL WITH TENSILE STRENGTH OF 150,000 P.S.I. AND A MINIMUM YIELD STRENGTH OF 130,000 P.S.I.

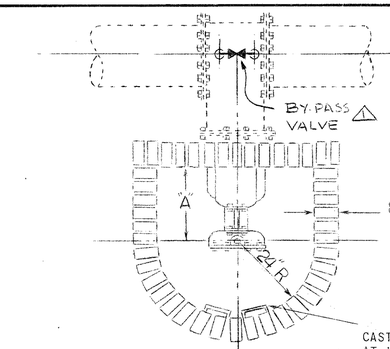

DIMENSIONS △1

VALVE SIZE	"A"	"D"	BY-PASS VALVE SIZE
16"	14	VARIES	3"
20"	24		3"
24"	24		4"
30"	24		4"
36"	24		6"

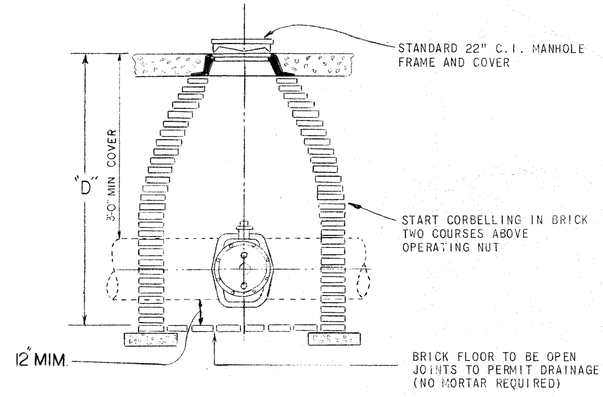

TYPICAL VALVE VAULT

M-12 C

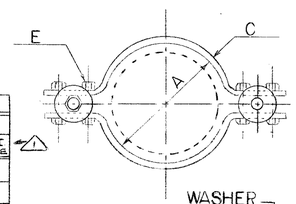

TYPICAL JOINT STRAP ROD ARRANGEMENT

BOLT HOLES SHALL BE 1/16" DIA. LARGER THAN BOLT

STEEL SOCKET CLAMP

PIPE SIZE	DIMENSIONS (INCHES) A	B	C	D	BOLT E	T	ROD & C.I. WASH. SIZE
4	5	14 5/8	1/2	2	5/8 x 3 1/2	5/8	3/4
6	7 1/8	16 7/8	1/2	2	5/8 x 3 1/2	5/8	3/4
8	9 5/16	18 1/8	5/8	2 1/2	5/8 x 3 3/4	5/8	3/4
10	11 1/2	21 3/8	5/8	2 1/2	3/4 x 3 3/4	3/4	1
12	13 1/2	25 1/8	5/8	3	7/8 x 4 1/2	3/4	1
14	15 3/4	28 1/4	3/4	3	7/8 x 4 1/2	7/8	1 1/8
16	17 7/8	31 3/8	3/4	4	1 x 4 1/2	7/8	1 1/8
18	20	35 1/8	3/4	4	1 1/4 x 5	1 1/8	1 1/4
20	22 1/8	37 3/4	3/4	4 1/2	1 1/4 x 5	1 1/8	1 3/8
22	26 3/8	44 1/4	3/4	5	1½ x 5½	1 1/4	1 1/2

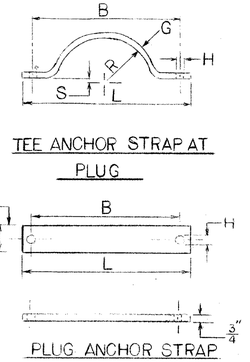

TEE ANCHOR STRAP AT PLUG

PLUG ANCHOR STRAP

ANCHOR STRAP DETAILS

DIMENSIONS INCHES

FITTING SIZE	B	G	H	L	R	S
4	10 1/8	5/8 x 2 1/2	13/16	12 1/2	2 1/2	3/4
6	12 1/8	5/8 x 2 1/2	13/16	14 1/2	3 9/16	3/4
8	14 3/8	5/8 x 2 1/2	13/16	16 3/4	4 21/32	3/4
10	16 11/16	5/8 x 2 1/2	1 1/16	19 1/16	5 3/4	3/4
12	19 3/16	5/8 x 3	1 1/16	22 5/16	6 3/4	7/8

SEE GENERAL NOTE 2.

NOTES FOR STRAP AND ROD DETAILS:

1. INSTALLATION OF AND MATERIALS FOR RODS, CLAMPS, STRAPS, BOLTS AND WASHERS SHALL CONFORM TO THE NATIONAL FIRE CODES-NFPA NO. 24 LATEST REVISION
2. YOKES AND ANCHOR STRAPS FOR FITTINGS LARGER THAN 12" SHALL BE DESIGNED AND APPROVED FOR THE SPECIFIC INSTALLATION.
3. RODS TO BE HIGH TENSILE, HOT ROLLED STEEL WITH TENSILE STRENGTH OF 150,000 P.S.I. AND A MINIMUM YIELD STRENGTH OF 130,000 P.S.I.
4. NUTS TO BE HEAVY DUTY SEMI-FINISHED WITH NATIONAL COURSE THREADS.
5. AFTER INSTALLATION TIE RODS AND CLAMP ASSEMBLY SHALL BE THOROUGHLY COVERED WITH ROYSTON LABORATORIES INC. ROSKOTE MASTIC NO. A939 OR KOPPERS CO., INC. BITUMASTIC SUPERSERVICE BLACK OR APPROVED EQUIVALENT.

STRAP AND ROD DETAILS

M-12 D

M-12

NO.	REVISIONS DESCRIPTION	BY	FIRM	DATE	BY	DATE
△	PRE-BID REVISIONS	FJS	F&A	7/79		
		SUBMITTAL			BUREAU OF WATER APPROVAL	

CONSULTING ENGINEERS
SUBMITTED BY: [signature]
REG. ENGR. GA. NO. 10317 DATE 1-29-79
MADISON · MADISON · INTERNATIONAL / FLOOD & ASSOCIATES, INC.

CITY OF ATLANTA
BUREAU OF WATER
T.E. STALLWORTH, JR., DIRECTOR
APPROVED BY: [signature]
DATE: 3-15-79

CITY OF ATLANTA, GEORGIA
DEPARTMENT OF ENVIRONMENT & STREETS BUREAU OF WATER
WATER IMPROVEMENT PROGRAM
EAST SIDE HARTSFIELD INTERNATIONAL AIRPORT
WATER STORAGE AND PUMPING STATION

MADISON · MADISON · INTERNATIONAL / FLOOD & ASSOCIATES, INC.
CONSULTING ENGINEERING
Joint Venture
ATLANTA, GEORGIA

DESIGNED BY: J.R.H. CHECKED BY: C.V. DATE: AUG. 1979
DRAWN BY: F.J. SCALE: AS SHOWN

PUMPING STATION MISCELLANEOUS DETAILS

PROJ. NO. 7733-1 SHEET NO. 18 OF 62

AF 7145

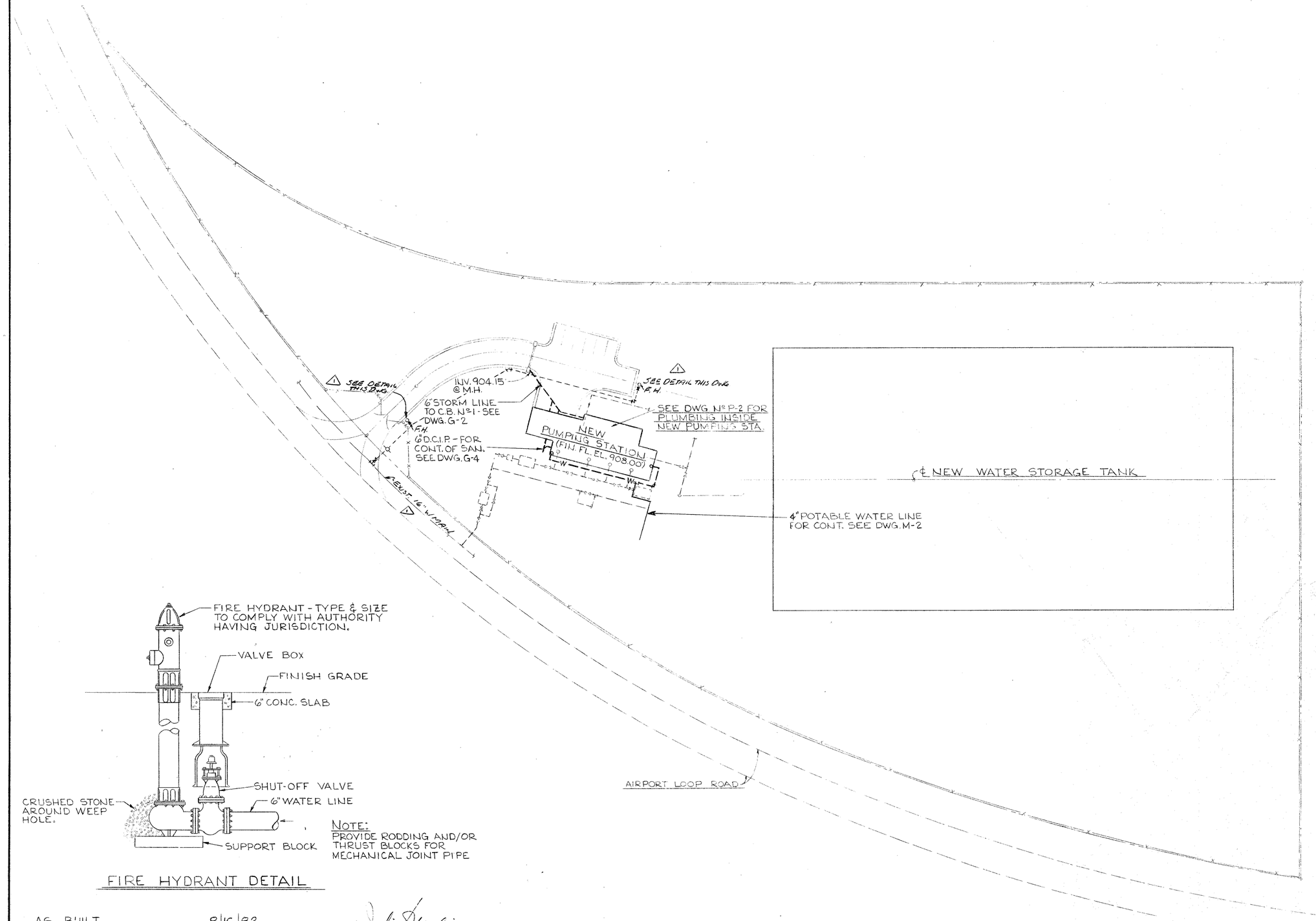

NOTE:
PROVIDE RODDING AND/OR THRUST BLOCKS FOR MECHANICAL JOINT PIPE

FIRE HYDRANT DETAIL

P-1

AS BUILT 8/16/82

NO.	DESCRIPTION	BY	FIRM	DATE	BY	DATE
	REVISIONS	SUBMITTAL			BUREAU OF WATER APPROVAL	
1	PRE-BID REVISIONS		MMF	7/79		

CONSULTING ENGINEERS
SUBMITTED BY: JULIAN C MADISON
REG. ENGR. GA. NO. 16072 DATE FEB 1979
MADISON · MADISON · INTERNATIONAL / FLOOD & ASSOCIATES, INC.

CITY OF ATLANTA
BUREAU OF WATER
T. E. STALLWORTH, JR., DIRECTOR
APPROVED BY: [signature]
DATE: 3-15-79

CITY OF ATLANTA, GEORGIA
DEPARTMENT OF ENVIRONMENT & STREETS BUREAU OF WATER
WATER IMPROVEMENT PROGRAM
EAST SIDE HARTSFIELD INTERNATIONAL AIRPORT
WATER STORAGE AND PUMPING STATION

MADISON · MADISON · INTERNATIONAL / FLOOD & ASSOCIATES, INC.
CONSULTING ENGINEERING
Joint Venture
ATLANTA, GEORGIA

DESIGNED BY: F. A. E. | CHECKED BY: W. T. | DATE: AUG. 1979
DRAWN BY: F. A. E. | SCALE: 1" = 40'

SITE PLUMBING PLAN

PROJ. NO. 7749-02 | SHEET NO. 19 OF 62

AF 7145

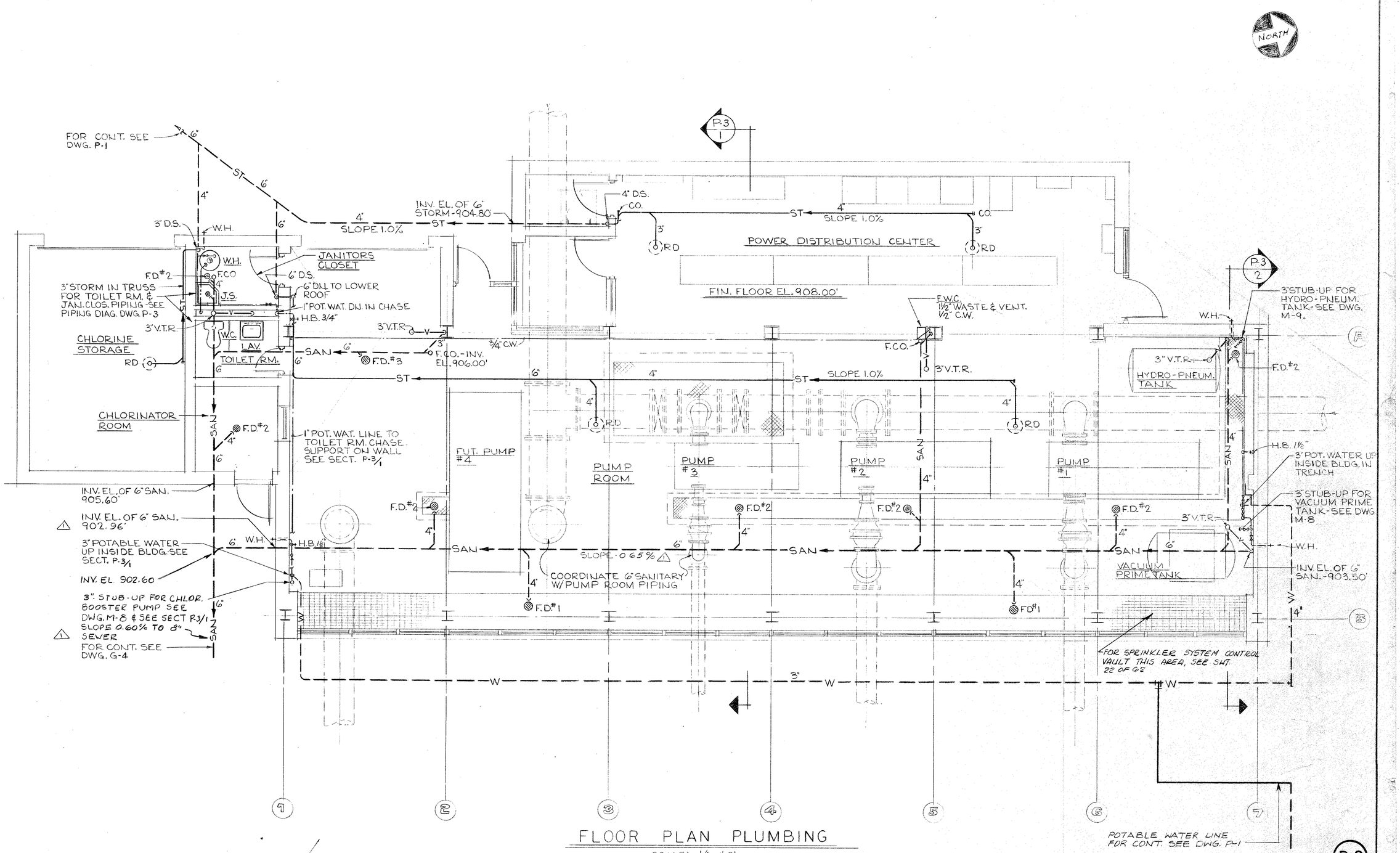

FLOOR PLAN PLUMBING

SCALE: 1/4 = 1'-0"

AS BUILT 8/16/82

NO.	DESCRIPTION	BY	FIRM	DATE	BY	DATE
	REVISIONS	SUBMITTAL			BUREAU OF WATER APPROVAL	
⚠	PRE-BID REVISIONS		MMI	7/79		

CONSULTING ENGINEERS
SUBMITTED BY: JULIAN C. MADISON
REG. ENGR. GA. NO. 10072 DATE FEB 1979
MADISON · MADISON · INTERNATIONAL / FLOOD & ASSOCIATES, INC.

CITY OF ATLANTA
BUREAU OF WATER
T. E. STALLWORTH, JR., DIRECTOR
APPROVED BY:
DATE: 3-15-79

CITY OF ATLANTA, GEORGIA

DEPARTMENT OF ENVIRONMENT & STREETS BUREAU OF WATER

WATER IMPROVEMENT PROGRAM

EAST SIDE HARTSFIELD INTERNATIONAL AIRPORT

WATER STORAGE AND PUMPING STATION

MADISON · MADISON · INTERNATIONAL / FLOOD & ASSOCIATES, INC.
CONSULTING ENGINEERING
Joint Venture
ATLANTA, GEORGIA

DESIGNED BY: F.A.E. CHECKED BY: W.T. DATE AUG. 1979
DRAWN BY: F.A.E. SCALE 1/4" = 1'-0"

PLUMBING FLOOR PLAN

PROJ. NO. 7749-02 SHEET NO. 20 OF 62

P-2

AF 7145

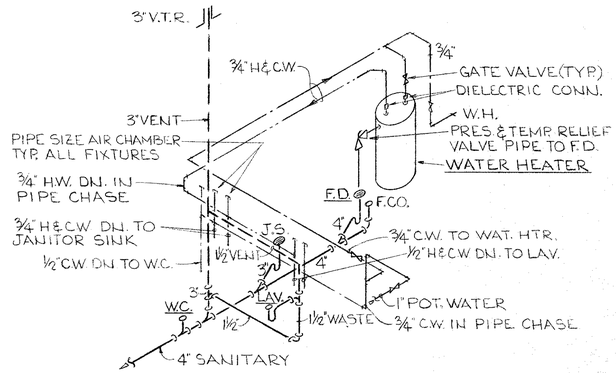

PIPING DIAGRAM
(TOILET RM. & JANITOR CLOSET)

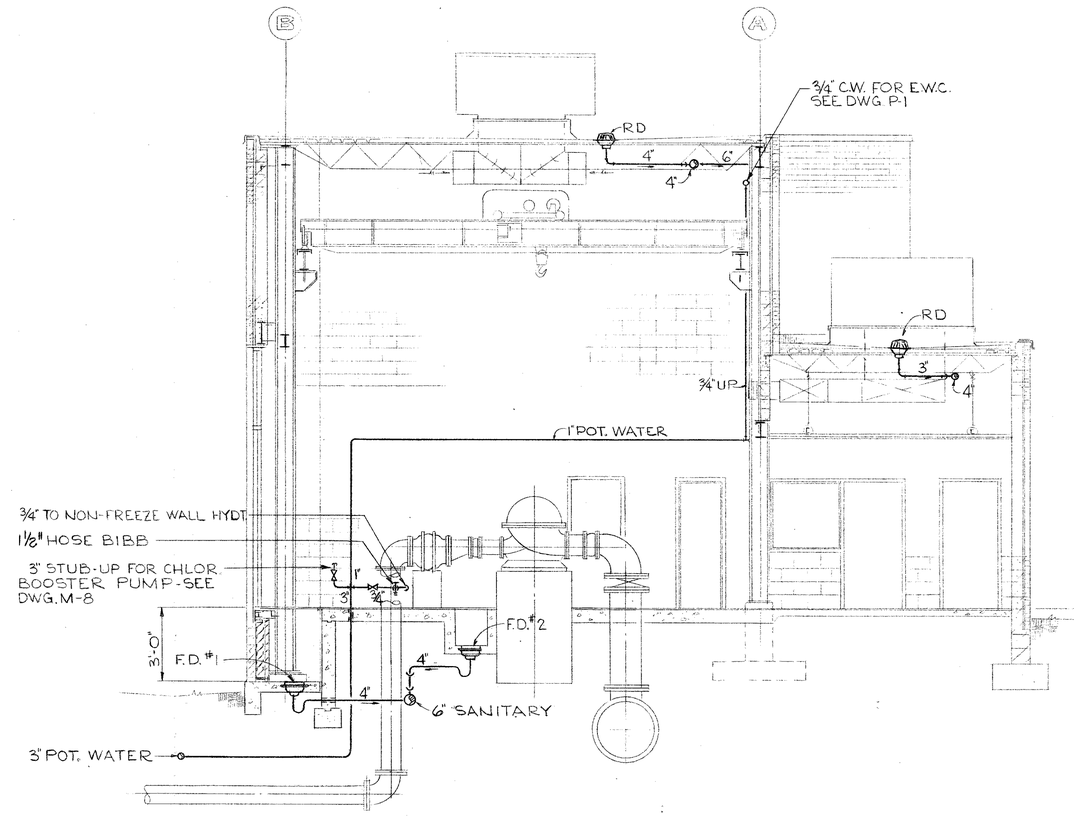

SECTION
SCALE: 1/4"=1'-0"

P-3 / P-2 | 1

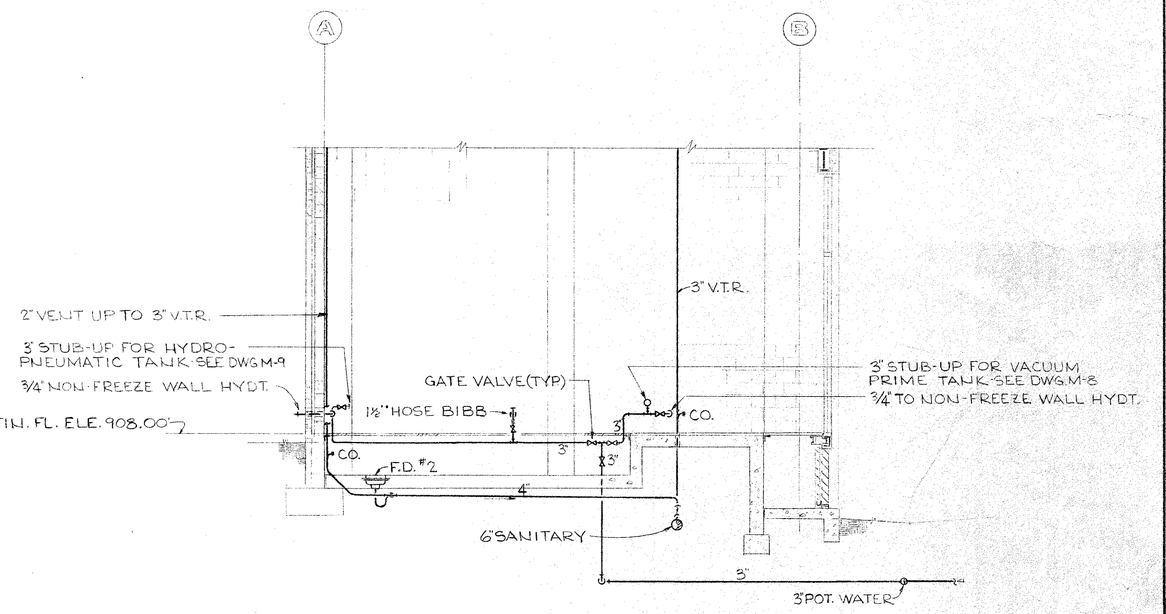

SECTION
SCALE: 1/4"=1'-0"

P-3 / P-2 | 2

P-3

AS BUILT 8|16|82

NO.	DESCRIPTION	BY	FIRM	DATE	BY	DATE
	REVISIONS	SUBMITTAL			BUREAU OF WATER APPROVAL	

CONSULTING ENGINEERS
SUBMITTED BY: JULIAN C. MADISON
REG. ENGR. GA. NO. 10072 DATE FEB 1979
MADISON · MADISON · INTERNATIONAL / FLOOD & ASSOCIATES, INC.

CITY OF ATLANTA
BUREAU OF WATER
T. E. STALLWORTH, JR. / DIRECTOR
APPROVED BY:
DATE: 3-15-79

CITY OF ATLANTA, GEORGIA
DEPARTMENT OF ENVIRONMENT & STREETS BUREAU OF WATER
WATER IMPROVEMENT PROGRAM
EAST SIDE HARTSFIELD INTERNATIONAL AIRPORT
WATER STORAGE AND PUMPING STATION

MADISON · MADISON · INTERNATIONAL / FLOOD & ASSOCIATES, INC.
CONSULTING ENGINEERING
Joint Venture
ATLANTA, GEORGIA

DESIGNED BY: F. A. E. | CHECKED BY: W. T. | DATE: AUG. 1979
DRAWN BY: F. A. E. | SCALE: 1/4"= 1'-0"

PLUMBING
CROSS SECTIONS

PROJ. NO. 7749-02 | SHEET NO. 21 OF 62

A F 7145

SWING JOINT RISER ASSMBLY DETAIL

		SYMBOL	DESCRIPTION	GPM	PSI @ SPKLR	COVERAGE
		⊕	WATER SOURCE			
		⊕	GATE VALVE - LINES SIZE			
		◉	#15111 A POP-AWAY SPRINKLER	4.03	50	40'R
		△	#47 ROTOR POP-UP SPRINKLER	15.1	70	59'R
		○	#41 ROTOR POP-UP SPRINKLER	18.3	70	60'R
			CONTROL BOXES W/ GREEN COVERS			

SPRINKLER NUMBERS ABOVE ARE MFG BY RAINBIRD SPRINKLER CORP.
IRRIGATION CONTROL BOXES AS MFG. BY AMETEK INC.

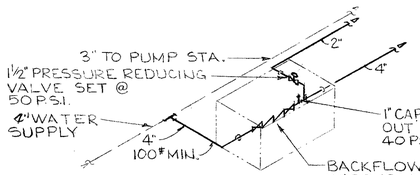

SPRINKLER SYSTEM CONTROL VAULT

N.T.S.

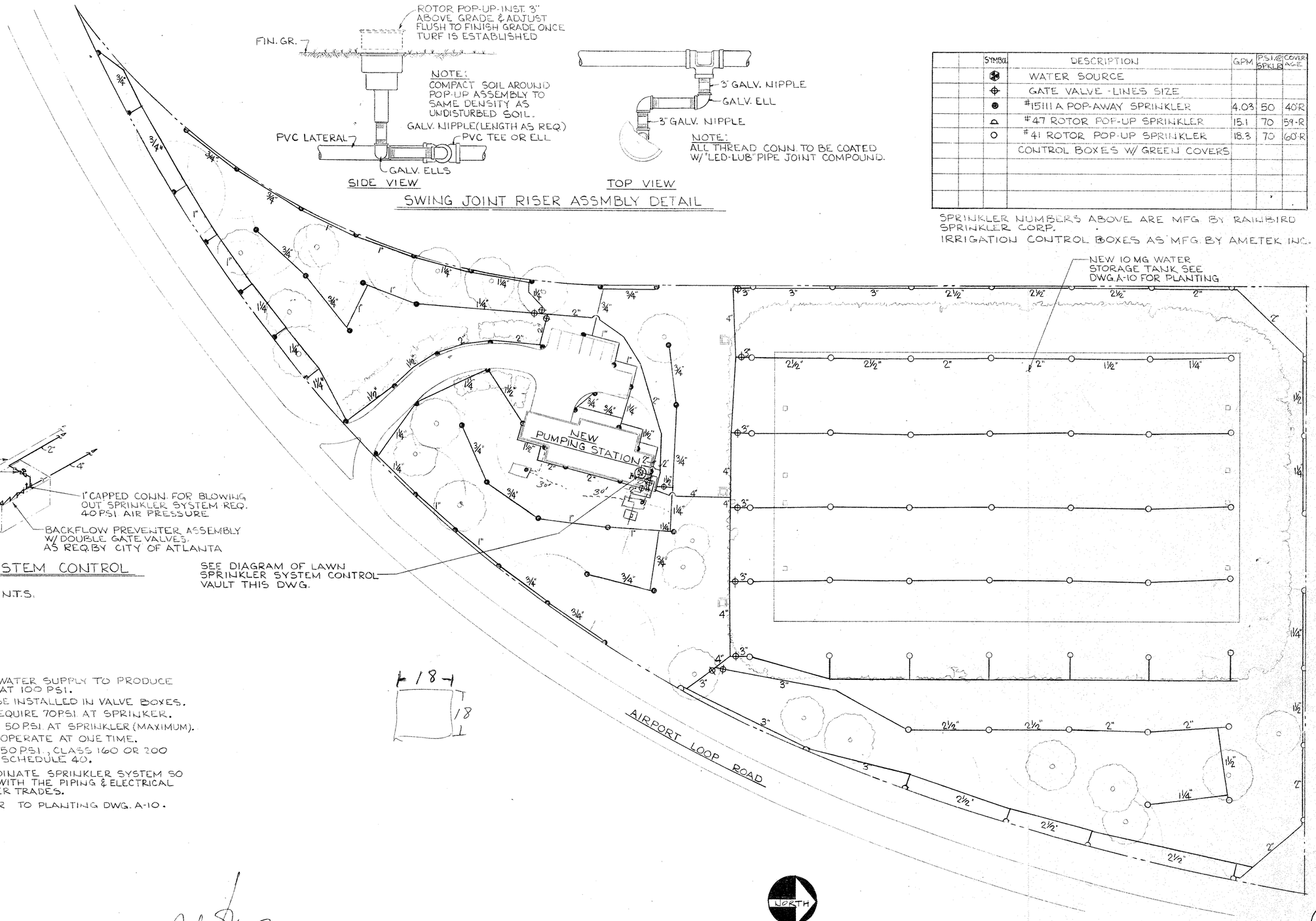

NOTES:

SPRINKLER SYSTEM WATER SUPPLY TO PRODUCE AT LEAST 180 GPM AT 100 PSI.

ALL GATE VALVES TO BE INSTALLED IN VALVE BOXES.

#41 & 47 ROTOR POP-UPS REQUIRE 70 PSI. AT SPRINKER.

15111A POP-AWAY REQUIRE 50 P.S.I. AT SPRINKLER (MAXIMUM).

ONLY ONE VALVE MAY OPERATE AT ONE TIME.

PIPE SHALL BE PVC, 150 PSI., CLASS 160 OR 200 FITTINGS SHALL BE SCHEDULE 40.

CONTRACTOR TO COORDINATE SPRINKLER SYSTEM SO AS NOT TO INTERFERE WITH THE PIPING & ELECTRICAL SYSTEMS OF THE OTHER TRADES.

CONTRACTOR TO REFER TO PLANTING DWG. A-10.

#18

18

AS BUILT 8/16/82

P-4

NO.	DESCRIPTION	BY	FIRM	DATE	BY	DATE
	REVISIONS	SUBMITTAL			BUREAU OF WATER APPROVAL	

CONSULTING ENGINEERS
SUBMITTED BY: JULIAN C MADISON
REG. ENGR. GA. NO. 10072 DATE FEB 1979
MADISON · MADISON · INTERNATIONAL / FLOOD & ASSOCIATES, INC.

CITY OF ATLANTA
BUREAU OF WATER
T.E. STALLWORTH, JR., DIRECTOR
APPROVED BY:
DATE: 3-15-79

CITY OF ATLANTA, GEORGIA

DEPARTMENT OF ENVIRONMENT & STREETS BUREAU OF WATER

WATER IMPROVEMENT PROGRAM

EAST SIDE HARTSFIELD INTERNATIONAL AIRPORT
WATER STORAGE AND PUMPING STATION

MADISON · MADISON · INTERNATIONAL / FLOOD & ASSOCIATES, INC.
CONSULTING ENGINEERING
Joint Venture
ATLANTA, GEORGIA

DESIGNED BY: F.A.E. CHECKED BY: W.T. DATE: AUG. 1979
DRAWN BY: F.A.E. SCALE: 1" = 40'

SITE LAWN SPRINKLER SYSTEM

PROJ. NO. 7749-02 SHEET NO. 22 OF 62

AF 7145

AIR HANDLING UNITS COMPONENTS

GENERAL			SUPPLY AIR FAN DATA										HEATING COIL DATA			REMARKS
MARK	SEE DWG. NO.	SERVICE	ARR'G.	TYPE	CFM	STATIC PRESSURE EXT.	STATIC PRESSURE TOT.	NO.	MIN. DIA.	RPM	V.	MOTOR H.P.	MBH	K.W	STAGES	
H&V#1	HV-1	PUMP ROOM	ROOF MTD.	FC-DWDI	6000	.40		2	15"	1050	1450	5	238	70	2	NESBITT NO. 150

ELECTRIC DUCT HEATER DATA

MARK	CAP. K.W.	NO. OF STAGES	DUCT HTR. SIZE WIDTH	DUCT HTR. SIZE HEIGHT	CFM	ELE. DATA	TEMP AIR IN	TEMP. AIR OUT	REMARKS
DH#1	4	2	12	5	140		10°F	79F	
DH#2	16	4	16	8	530		10F	92F	

SUPPLY AND EXHAUST FAN DATA

MARK	SEE DWG. NO.	SERVICE	CAP. CFM	TOT. S.P.	TYPE	ARR'G.	DRIVE	RPM	MOTOR H.P.	REMARKS
EF#1	M-2	PUMP ROOM.	10000	1/4	CENTRIF.	ROOF MTD.	BELT	385	1 1/2	GREEN-HECK "RCX 36-15
EF#2		" "	10000	1/4"	"	" "	"	385	1 1/2	" " " " "
EF#3		" "	10000	1/4"	"	" "	"	385	1 1/2	" " " " "
EF#4		" "	10000	1/4"	"	" "	"	385	1 1/2	" " " " "
EF#5		CHLORINATOR RM.	150	1/8"	PROP.	WALL MTD.	DIRECT	1050	1/40	" " SDE-10-24-E
EF#6		TOILETS.	180	1/4"	"	ROOF MTD.	DIRECT	1300	1/60	" " CE-7-5G
SF#1		CHLORINATOR RM.	150	3/8"	PROP.	ROOF MTD.	DIRECT	1050	1/20	" " A1-12-C
SF#2		CHLORINE STORAGE	530	3/8	"	" "	"	1140	1/12	" " A1-14-B

HEATING AND AIR CONDITIONG LEGEND

TF	TOP FLAT	AP	ACCESS PANEL
BF	BOTTOM FLAT	VD	VOLUME DAMPER
SA	SUPPLY AIR	OBD	OPPOSED BLADE DAMPERS
SAR	SUPPLY AIR REGISTER	BD	BACK DRAFT DAMPER
RA	RETURN AIR	MD	MOTORIZED DAMPERS
RAR	RETURN AIR REGISTER	T	T. STAT.
EA	EXHAUST AIR	N	NIGHT STAT.
EAR	EXHAUST AIR REGISTER		DIFF. WITH BLANK OFF SECTION
SAG	SUPPLY AIR GRILLE		DOOR LOUVER
SAR	SUPPLY AIR REGISTER		
RAG	RETURN AIR GRILLE		
RAR	RETURN AIR REGISTER		
F	FIRE DAMPER		

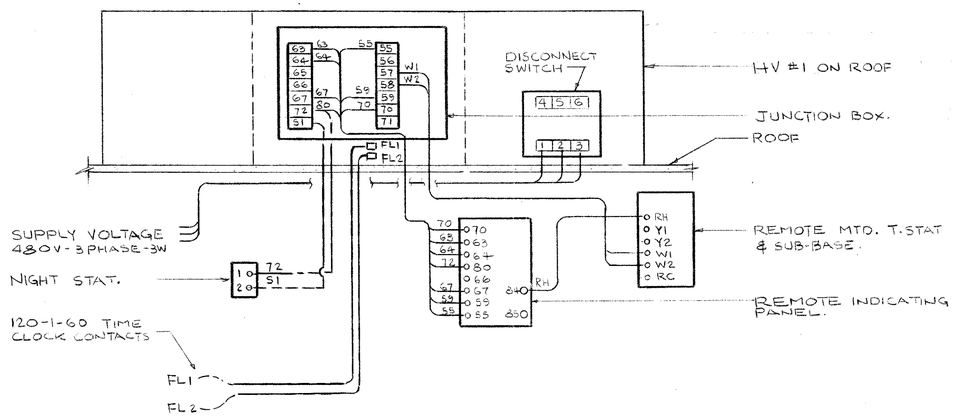

HV 1 - CONTROL WIRING DIAGRAM

NO SCALE

AS BUILT 8|16|82

HV-1

NO.	DESCRIPTION	BY	FIRM	DATE	BY	DATE
	REVISIONS	SUBMITTAL			BUREAU OF WATER APPROVAL	

CONSULTING ENGINEERS
SUBMITTED BY: JULIAN C MADISON
REG. ENGR. GA. NO. 10072 DATE FEB. 1979
MADISON · MADISON · INTERNATIONAL / FLOOD & ASSOCIATES, INC.

CITY OF ATLANTA
BUREAU OF WATER
T. E. STALLWORTH, JR., DIRECTOR
APPROVED BY:
DATE: 3-15-79

CITY OF ATLANTA, GEORGIA

DEPARTMENT OF ENVIRONMENT & STREETS BUREAU OF WATER

WATER IMPROVEMENT PROGRAM

EAST SIDE HARTSFIELD INTERNATIONAL AIRPORT
WATER STORAGE AND PUMPING STATION

MADISON · MADISON · INTERNATIONAL / FLOOD & ASSOCIATES, INC.
CONSULTING ENGINEERING
Joint Venture
ATLANTA, GEORGIA

DESIGNED BY: H.S.A. CHECKED BY: W.T. DATE: AUG. 1979
DRAWN BY: H.S.A. SCALE: N.T.S.

SCHEDULE SHEET AND CONTROL WIRING DIAGRAM

PROJ. NO. 7749-02 SHEET NO. 23 OF 62

AF 7145

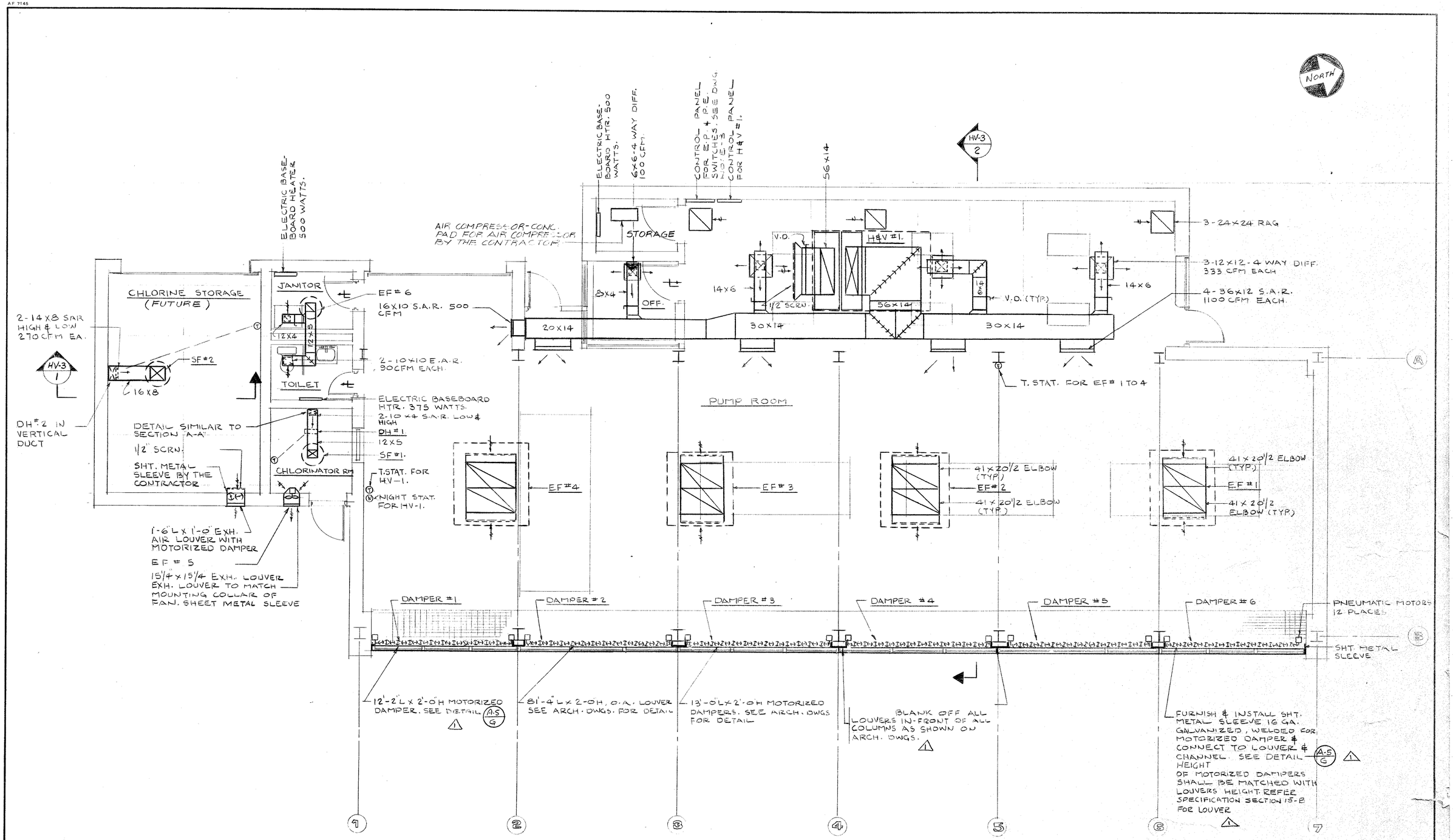

FIRST FLOOR PLAN

SCALE : 1/4" = 1'-0"

HV-2

AS BUILT 8/16/82

NO.	DESCRIPTION	BY	FIRM	DATE	BY	DATE
	REVISIONS	SUBMITTAL			BUREAU OF WATER APPROVAL	
1	PRE-BID REVISIONS		MMI	7/79		

CONSULTING ENGINEERS
SUBMITTED BY: JULIAN C. MADISON
REG. ENGR. GA. NO. 10772 DATE FEB. 1979
MADISON · MADISON · INTERNATIONAL / FLOOD & ASSOCIATES, INC.

CITY OF ATLANTA
BUREAU OF WATER
T. E. STALLWORTH, JR., DIRECTOR
APPROVED BY:
DATE: 3-15-79

CITY OF ATLANTA, GEORGIA

DEPARTMENT OF ENVIRONMENT & STREETS BUREAU OF WATER

WATER IMPROVEMENT PROGRAM

EAST SIDE HARTSFIELD INTERNATIONAL AIRPORT
WATER STORAGE AND PUMPING STATION

MADISON · MADISON · INTERNATIONAL / FLOOD & ASSOCIATES, INC.
CONSULTING ENGINEERING
Joint Venture
ATLANTA, GEORGIA

DESIGNED BY: H.S.A. CHECKED BY: W.T. DATE: AUG. 1979
DRAWN BY: H.S.A. SCALE: 1/4"= 1'-0"

HEATING AND VENTILATING FLOOR PLAN

PROJ NO. 7749-02 SHEET NO. 24 OF 62

AF 7145

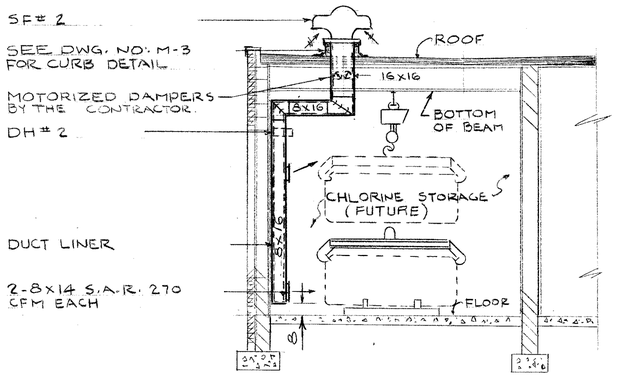

SECTION HV-3 / HV-2 | 1

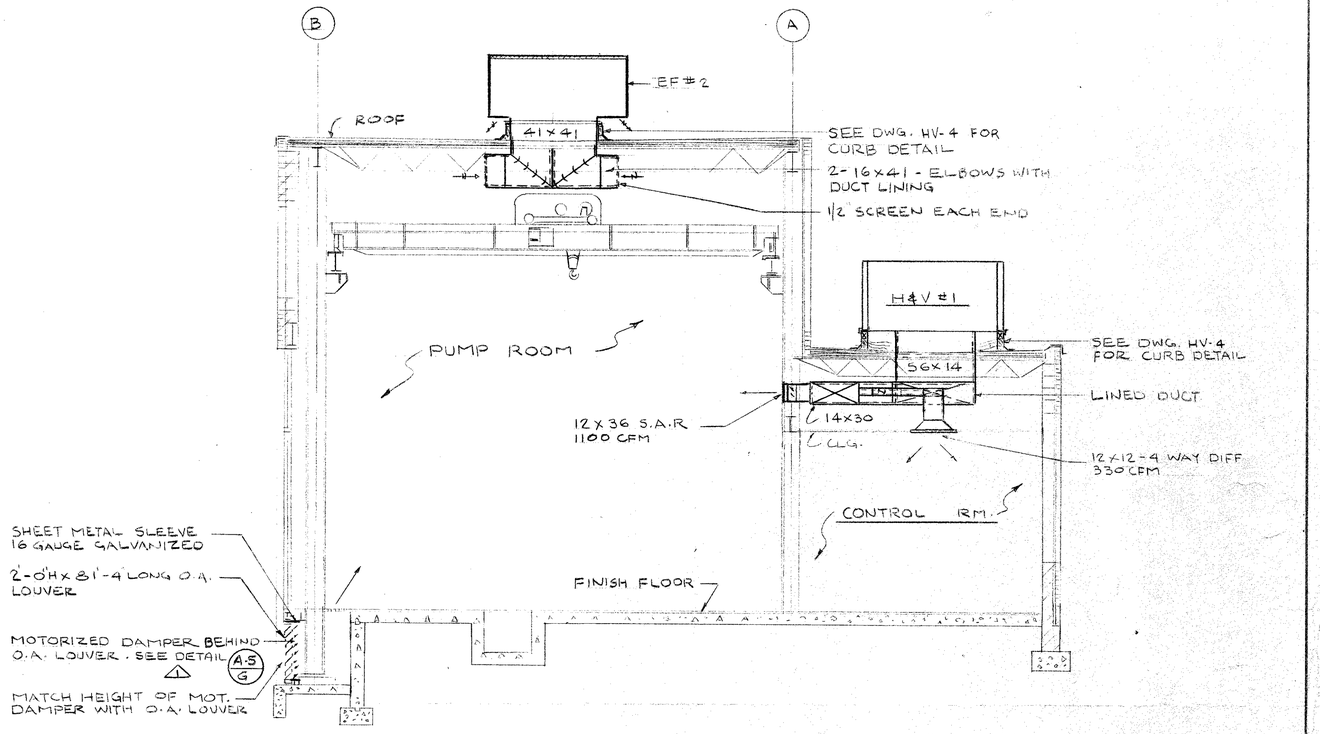

SECTION HV-3 / HV-2 | 2

AS BUILT 8/16/82

NO.	DESCRIPTION	BY	FIRM	DATE	BY	DATE
1	PRE-BID REVISIONS		MMI	7/79		
NO.	REVISIONS	SUBMITTAL			BUREAU OF WATER APPROVAL	

CONSULTING ENGINEERS
SUBMITTED BY: JULIAN C. MADISON
REG. ENGR. GA. NO. 12072 DATE FEB 1979
MADISON · MADISON · INTERNATIONAL / FLOOD & ASSOCIATES, INC.

CITY OF ATLANTA
BUREAU OF WATER
T. E. STALLWORTH, JR., DIRECTOR
APPROVED BY: T. E. Stallworth Jr.
DATE: 3-15-79

CITY OF ATLANTA, GEORGIA
DEPARTMENT OF ENVIRONMENT & STREETS BUREAU OF WATER
WATER IMPROVEMENT PROGRAM
EAST SIDE HARTSFIELD INTERNATIONAL AIRPORT
WATER STORAGE AND PUMPING STATION

MADISON · MADISON · INTERNATIONAL / FLOOD & ASSOCIATES, INC.
CONSULTING ENGINEERING
Joint Venture
ATLANTA, GEORGIA

DESIGNED BY: H.S.A. CHECKED BY: W.T. DATE: AUG. 1979
DRAWN BY: H.S.A. SCALE: 1/4" = 1'-0"

HEATING AND VENTILATING SECTIONS

PROJ. NO. 7749-02 SHEET NO. 25 OF 62

HV-3

AF 7145

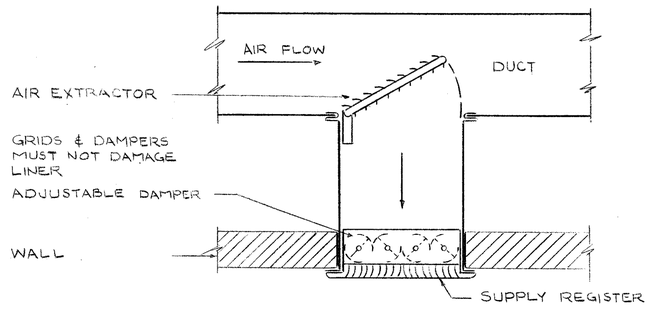

REGISTER CONNECTION DET.
N.T.S.

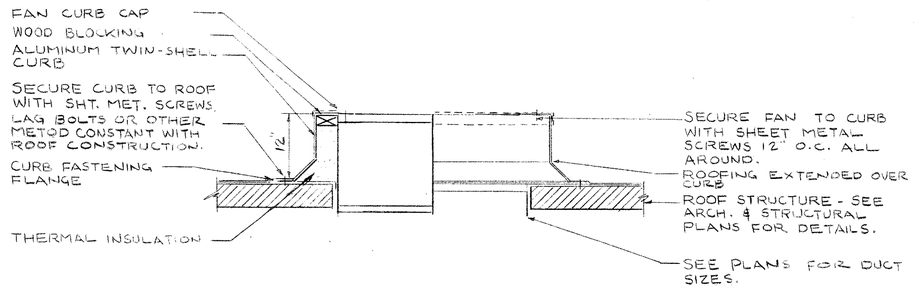

EXHAUST FAN CURB DETAIL
N.T.S.

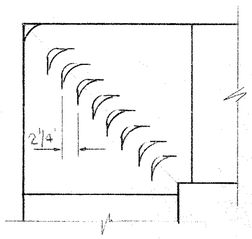

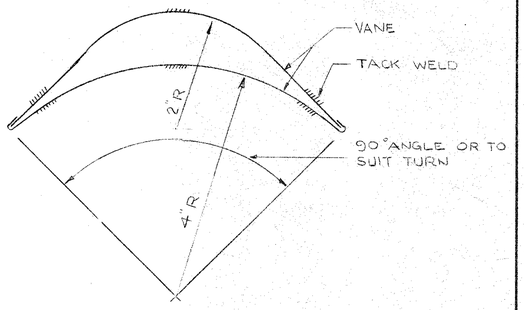

DOUBLE VANE ELBOW DETAIL
N.T.S.

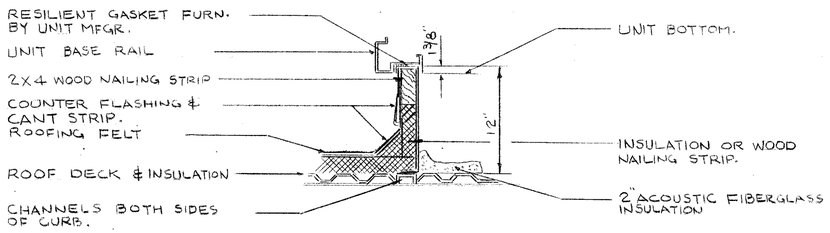

ROOFTOP UNIT'S CURB DETAIL
N.T.S.

AS BUILT 8|16|82

NO.	DESCRIPTION	BY	FIRM	DATE	BY	DATE
	REVISIONS	SUBMITTAL			BUREAU OF WATER APPROVAL	

CONSULTING ENGINEERS
SUBMITTED BY: JULIAN C. MADISON
REG. ENGR. GA. NO. 10072 DATE FEB 1979
MADISON · MADISON · INTERNATIONAL / FLOOD & ASSOCIATES, INC.

CITY OF ATLANTA
BUREAU OF WATER
T. E. STALLWORTH, JR., DIRECTOR
APPROVED BY:
DATE: 3-15-79

CITY OF ATLANTA, GEORGIA
DEPARTMENT OF ENVIRONMENT & STREETS BUREAU OF WATER
WATER IMPROVEMENT PROGRAM
EAST SIDE HARTSFIELD INTERNATIONAL AIRPORT
WATER STORAGE AND PUMPING STATION

MADISON · MADISON · INTERNATIONAL / FLOOD & ASSOCIATES, INC.
CONSULTING ENGINEERING
Joint Venture
ATLANTA, GEORGIA

DESIGNED BY: H.S.A. CHECKED BY: W.T. DATE: AUG. 1979
DRAWN BY: H.S.A. SCALE: N.T.S.

HEATING AND VENTILATING DETAILS

PROJ. NO. 7749-02 SHEET NO. 26 OF 62

HV-4

AF 7145

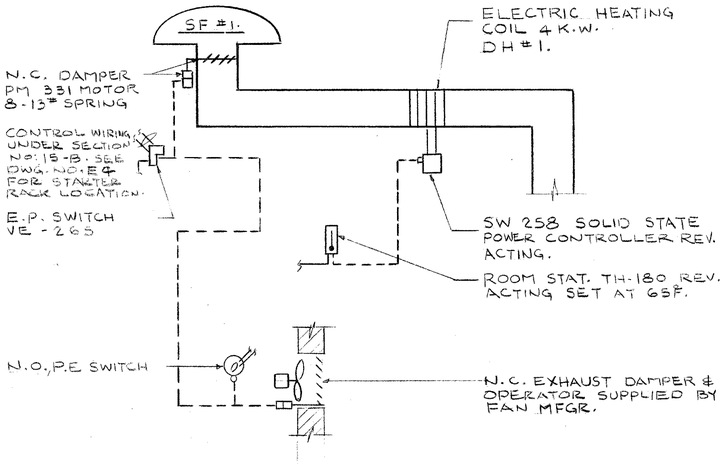

CONTROL DIAGRAM FOR SF. NO. 1

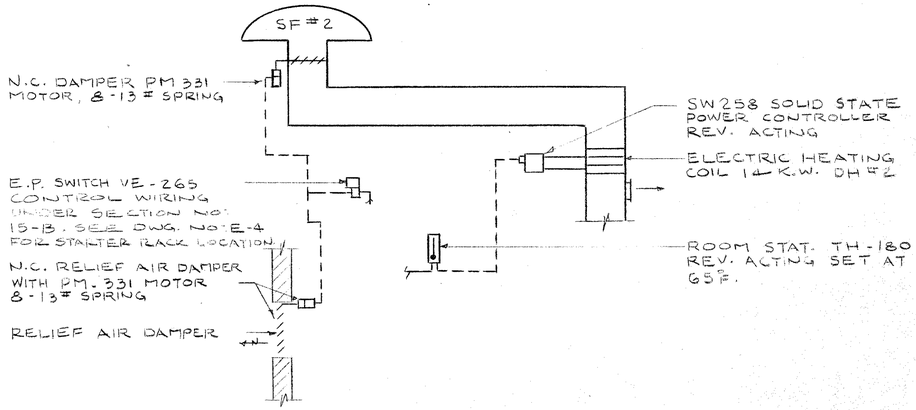

CONTROL DIAGRAM FOR SF. NO. 2

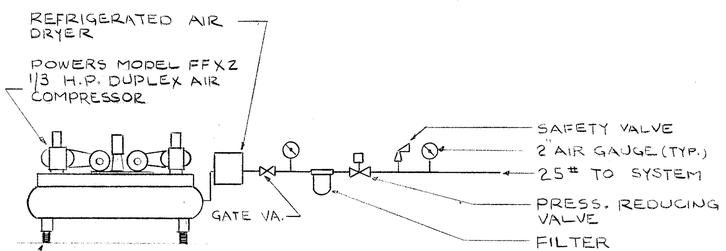

AIR COMRESSOR DIAGRAM

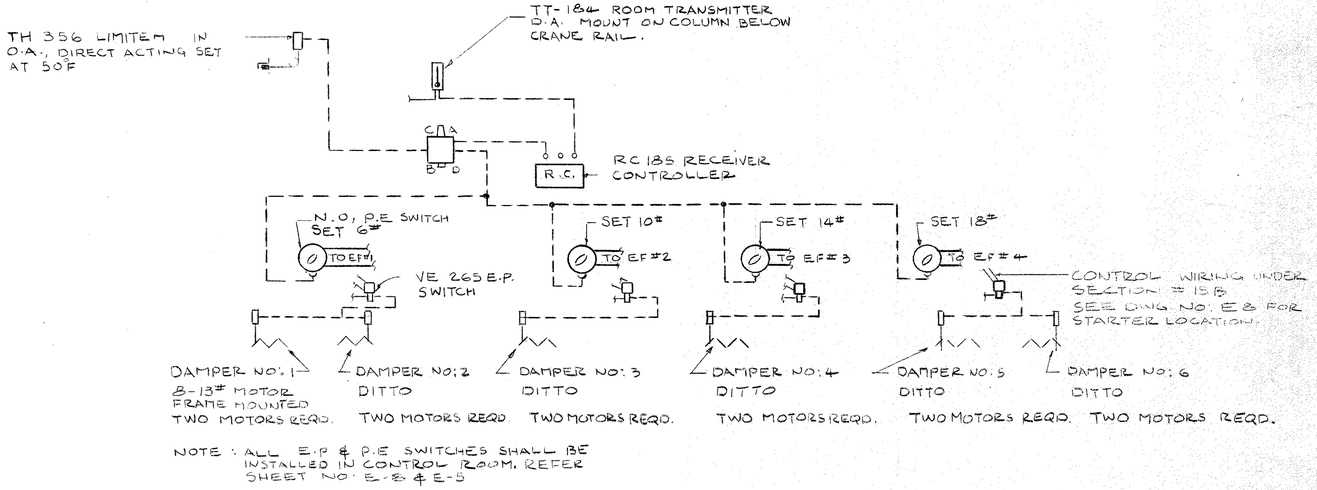

CONTROL DIAGRAM FOR EXHAUST FAN NO. 1 TO 4

AS BUILT 8|16|82

HV-5

NO.	DESCRIPTION	BY	FIRM	DATE	BY	DATE
	REVISIONS	SUBMITTAL			BUREAU OF WATER APPROVAL	

CONSULTING ENGINEERS
SUBMITTED BY: JULIAN C. MADISON
REG. ENGR. GA. NO. 10012 DATE FEB 1979
MADISON-MADISON-INTERNATIONAL / FLOOD & ASSOCIATES, INC.

CITY OF ATLANTA
BUREAU OF WATER
T. E. STALLWORTH, JR., DIRECTOR
APPROVED BY: DATE: 3-15-79

CITY OF ATLANTA, GEORGIA
DEPARTMENT OF ENVIRONMENT & STREETS BUREAU OF WATER
WATER IMPROVEMENT PROGRAM
EAST SIDE HARTSFIELD INTERNATIONAL AIRPORT
WATER STORAGE AND PUMPING STATION

MADISON · MADISON · INTERNATIONAL / FLOOD & ASSOCIATES, INC.
CONSULTING ENGINEERING
Joint Venture
ATLANTA, GEORGIA

DESIGNED BY: H.S.A. CHECKED BY: W.T. DATE: AUG. 1979
DRAWN BY: H.S.A. SCALE: N.T.S.

HEATING AND VENTILATING CONTROL DIAGRAMS

PROJ. NO. 7749-02 SHEET NO. 27 OF 62

AF 7145

PIPING, VALVE & FITTING NOTES

1. ALL GATE VALVES SHALL BE MECHANICAL JOINTS.
2. ALL OUTSIDE VALVES EXCEPT BALL VALVES SHALL BE MECHANICAL JOINTS, UNLESS SHOWN OTHERWISE.
3. FLOW METERS SHALL BE FLANGED 125 POUND.
4. TEES AT DISCHARGE HEADER SHALL BE MECHANICAL JOINT & RESTRAINED JOINT.
5. BOTTOM 90° BEND AT EACH PUMP DISCHARGE COLUMN SHALL BE RESTRAINED JOINTS.
6. RESTRAINED JOINT SHALL BE LOK-TYTON OR EQUAL.
7. ALL BALL VALVES SHALL BE FLANGED AND DRILLED 125 POUND, EXCEPT PUMP CHECK VALVES WHICH SHALL BE FLANGED AND DRILLED 250 POUND ON THE INLET SIDE AND 125 POUND ON THE OUTLET SIDE.
8. TOP 90° BEND AT EACH PUMP DISCHARGE COLUMN SHALL BE FLANGED AND DRILLED 125 POUND.
9. WHERE NOT NOTED ABOVE, SPECIFIED, OR OTHERWISE INDICATED, ALL INSIDE PIPING, VALVES AND FITTING, ETC. SHALL BE FLANGED & DRILLED 125 POUND, AND ALL OUTSIDE PIPING SHALL BE SLIP ON OR TYTON JOINT.

NOTE: CHLORINATION SYSTEM WAS DELETED FROM CONSTRUCTION CONTRACT. IT MAY BE INSTALLED IN FUTURE.

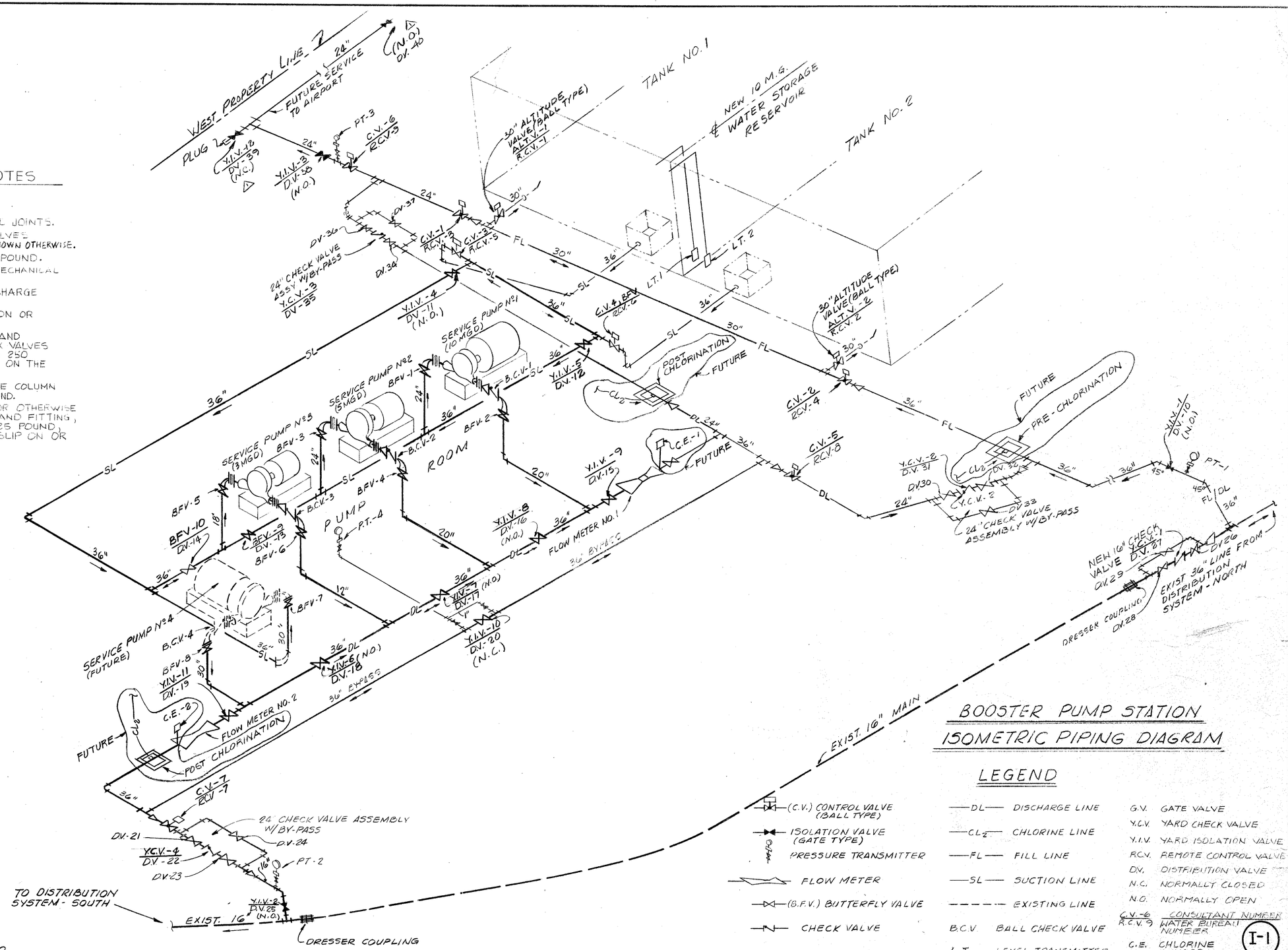

BOOSTER PUMP STATION
ISOMETRIC PIPING DIAGRAM

LEGEND

- (C.V.) CONTROL VALVE (BALL TYPE)
- ISOLATION VALVE (GATE TYPE)
- PRESSURE TRANSMITTER
- FLOW METER
- (B.F.V.) BUTTERFLY VALVE
- CHECK VALVE
- DL — DISCHARGE LINE
- Cl_2 — CHLORINE LINE
- FL — FILL LINE
- SL — SUCTION LINE
- EXISTING LINE
- B.C.V. BALL CHECK VALVE
- L.T. LEVEL TRANSMITTER
- G.V. GATE VALVE
- Y.C.V. YARD CHECK VALVE
- Y.I.V. YARD ISOLATION VALVE
- R.C.V. REMOTE CONTROL VALVE
- DV. DISTRIBUTION VALVE
- N.C. NORMALLY CLOSED
- N.O. NORMALLY OPEN
- C.V.-6 / R.C.V.-3 CONSULTANT NUMBER / WATER BUREAU NUMBER
- C.E. CHLORINE SENSOR

I-1

AS - BUILT 8/16/82

NO.	DESCRIPTION	BY	FIRM	DATE	BY	DATE
	REVISIONS	SUBMITTAL			BUREAU OF WATER APPROVAL	
2	ADDITION: PIPING VALVE & FITTING NOTES	MON	MM I	10/79		
1	PRE-BID REVISIONS	FWS	F&A	7/79		

CONSULTING ENGINEERS
SUBMITTED BY: [signature]
REG. ENGR. GA. NO. 10317 DATE 1-29-79
MADISON · MADISON · INTERNATIONAL / FLOOD & ASSOCIATES, INC.

CITY OF ATLANTA
BUREAU OF WATER
T. E. STALLWORTH, JR., DIRECTOR
APPROVED BY: [signature]
DATE: 3-15-79

CITY OF ATLANTA, GEORGIA
DEPARTMENT OF ENVIRONMENT & STREETS BUREAU OF WATER
WATER IMPROVEMENT PROGRAM
EAST SIDE HARTSFIELD INTERNATIONAL AIRPORT
WATER STORAGE AND PUMPING STATION

MADISON · MADISON · INTERNATIONAL / FLOOD & ASSOCIATES, INC.
CONSULTING ENGINEERING
Joint Venture
ATLANTA, GEORGIA

DESIGNED BY: D.L. CHECKED BY: C.V. DATE: AUG. 1979
DRAWN BY: J.A.B. SCALE: NONE

SCHEMATIC FLOW DIAGRAM

PROJ. NO. 7733-1 SHEET NO. 28 OF 62

AF 7145

BUREAU LOAD CENTER

INSTRUMENTATION PANEL

FIELD

"X-Y" PLOTTER

PA SYSTEM EQUIPMENT

EXISTING COMPUTER SYSTEM

PA SYSTEM EQUIPMENT

INTERFACE

REMOTE TERMINAL UNIT (RTU)

ANNUNCIATOR

PA SYSTEM

HV SWITCHGEAR

MICROPHONES

HYDROPNEUMATIC TANK P.S.

VACUUM PUMP CONTROL PANEL

FIRE ALARM PANEL

VSP 7 — PI 2

FI 2 — FR 3 — AS — FI 1

PR 4

VSP 5 — VSP 6 — PI 3

LR 3 — LI 1 — AS — LI 2 — PI 1

PT 3

VC 6

VC 1

VC 8

VC 3

VC 4

LT 1

LT 2

FT 2 — FE 2

FT 1 — FE 1

PT 4

VC 2

VC 9

VC 5

VC 7

PT 2

PT 1

LEGEND

XY UNIT

"X"

F - FLOW
L - LEVEL
P - PRESSURE
C - Cl_2 RESIDUAL
AS - ADD/SUB
V - VALVE
T - TREND

"Y"

E - ELEMENT
T - TRANSMITTER
I - INDICATOR
R - RECORDER
C - CONTROLLER
SP - SET POINT STA.

P.B STA. W/PILOT LTGS

I-2

AS BUILT 8/16/82

NO.	DESCRIPTION	BY	FIRM	DATE	BY	DATE
	REVISIONS	SUBMITTAL			BUREAU OF WATER APPROVAL	

CONSULTING ENGINEERS
SUBMITTED BY: [signature]
REG. ENGR. GA. NO. 10317 DATE 1-29-79
MADISON · MADISON · INTERNATIONAL / FLOOD & ASSOCIATES, INC.

CITY OF ATLANTA
BUREAU OF WATER
T. E. STALLWORTH, JR., DIRECTOR
APPROVED BY: [signature]
DATE: 3-15-79

CITY OF ATLANTA, GEORGIA

DEPARTMENT OF ENVIRONMENT & STREETS BUREAU OF WATER

WATER IMPROVEMENT PROGRAM

EAST SIDE HARTSFIELD INTERNATIONAL AIRPORT
WATER STORAGE AND PUMPING STATION

MADISON · MADISON · INTERNATIONAL / FLOOD & ASSOCIATES, INC.
CONSULTING ENGINEERING
Joint Venture
ATLANTA, GEORGIA

DESIGNED BY: D. L. | CHECKED BY: C. V. | DATE AUG. 1979
DRAWN BY: A. J. S. | SCALE NONE

CONTROL DIAGRAM

PROJ. NO. 7733-1

SHEET NO. 29 OF 62

AF 7145

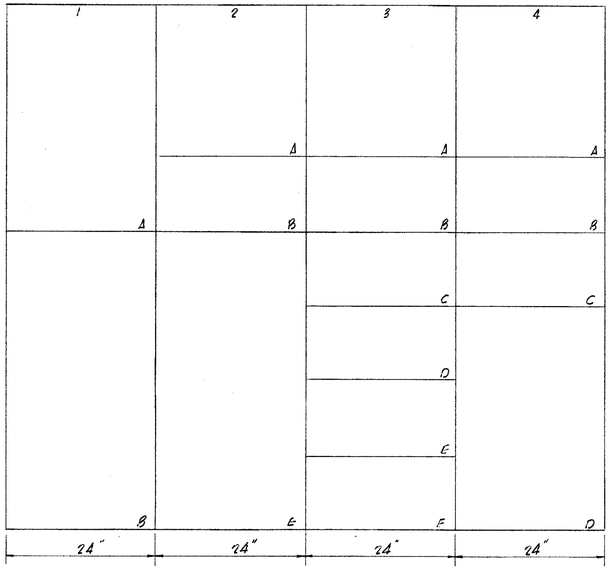

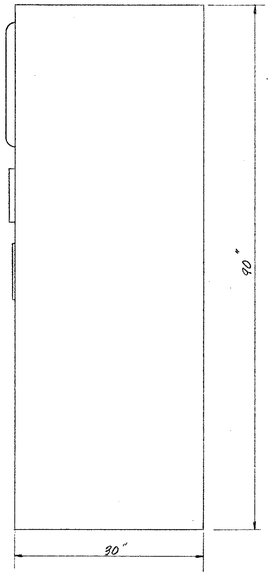

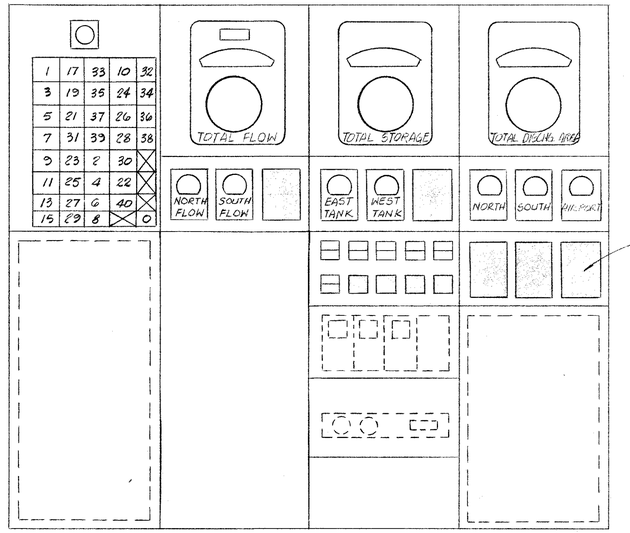

INSTRUMENTATION PANEL SCHEDULE		
UNIT #	DEVICE DESCRIPTION	REMARKS
1A	ANNUNCIATOR	SEE ALARM SCHEDULE
1B	UPS	RACK MOUNTED
2A	FR-3	
2B	FI-1, FI-2	
2E	SPACE	AS REQUIRED FOR ACCESSORY DEVICES
3A	LR-3	
3B	LI-1 LI-2	
3C	VC-1, 2, 3, 4, 89 PB'S & PILOT LTGS.	
3D	VSP-5, VSP-6, VSP-7	RACK MOUNTED
3E	PA EQUIPMENT	RACK MOUNTED
3F	SPACE	AS REQUIRED FOR ACCESSORY DEVICES
4A	PR-4	
4B	PI-1 PI-2 PI-3	
4C	SPACE	INSERTS FOR FUTURE INDICATORS
4D	RTU	RACK MOUNTED

NOTES:

1. ALL DEVICES SHALL BE IDENTIFIED, AS TO SERVICE OR FUNCTION, WITH NAMEPLATES. DEVICES RACK MOUNTED, BEHIND PANEL DOORS, SHALL BE IDENTIFIED WITH DUPLICATE DOOR MOUNTED NAMEPLATES. NAMEPLATES SHALL BE MINIMUM 2"x 3/4" WHITE BAKELITE WITH BLACK ENGRAVED LETTERING.
2. SPACES FOR FUTURE DEVICES SHALL BE PROVIDED AS INDICATED, WITH SEALED REMOVABLE INSERTS.

ANNUNCIATOR SCHEDULE			
1	DISCHARGE PRESSURE-HIGH	2	STORAGE TANK # 1 HIGH CAPACITY
3	DISCHARGE PRESSURE - LOW	4	" " 1 LOW "
5	PUMP # 1 LOW DISCHARGE PRESSURE	6	" " 2 HIGH "
7	" 2 " "	8	" " 2 LOW "
9	" 3 " "	10	STORAGE TANKS TOTAL - LOW
11	" 4 " "	12	SPARE
13	" 1 LOSS OF PRIME	14	SPARE
15	" 2 " "	16	SPARE
17	" 3 " "	18	SPARE
19	" 4 " "	20	
21	VACUUM PRIME SYSTEM - ALARM	22	INST. PANEL EMERG POWER ON
23	PUMP # 1 - EMERGENCY SHUTDOWN	24	FIRE ALARM
25	" 2 " "	26	POWER FAILURE - LINE # 1
27	" 3 " "	28	" " - LINE # 2
29	" 4 " "	30	EMERGENCY TIE BREAKER CLOSED
31	VALVE ACTUATING SYSTEM - LOW PRES.	32	PUMP NO. 1 BALL VALVE FAILURE
33	PUMP # 1 - HIGH TEMPERATURE ALARM	34	" NO. 2 " " "
35	" 2 " "	36	" NO. 3 " " "
37	" 3 " "	38	" NO. 4 " " "
39	" 4 " "	40	REMOTE TERMINAL UNIT FAILURE

NOTE: FOR FINAL AS BUILT INSTRUMENTATION SYSTEM DRAWINGS, SEE TURBITROL DWG. NO. C79087-27016

AS BUILT 8/16/82

I-3

NO.	DESCRIPTION	BY	FIRM	DATE	BY	DATE
	REVISIONS	SUBMITTAL			BUREAU OF WATER APPROVAL	

CONSULTING ENGINEERS
SUBMITTED BY: [signature]
REG. ENGR. GA. NO. 10317 DATE 4/29/79
MADISON · MADISON · INTERNATIONAL / FLOOD & ASSOCIATES, INC.

CITY OF ATLANTA
BUREAU OF WATER
APPROVED BY: [signature]
DATE: 3-15-79

CITY OF ATLANTA, GEORGIA
DEPARTMENT OF ENVIRONMENT & STREETS BUREAU OF WATER
WATER IMPROVEMENT PROGRAM
EAST SIDE HARTSFIELD INTERNATIONAL AIRPORT
WATER STORAGE AND PUMPING STATION

MADISON · MADISON · INTERNATIONAL / FLOOD & ASSOCIATES, INC.
CONSULTING ENGINEERING
Joint Venture
ATLANTA, GEORGIA

DESIGNED BY: D.L. CHECKED BY: C.V. DATE: AUG. 1979
DRAWN BY: A.J.S. SCALE:

CONTROL PANEL

PROJ. NO. 7733-1 SHEET NO. 30 OF 62

AF 7145

DESIGN CRITERIA

(ALL DESIGN PER "CITY OF ATLANTA, GEORGIA" BUILDING CODE, EXCEPT AS NOTED.)

1. LIVE LOADS:
   - ROOF — 20#/SQ.FT.
   - TOP OF RESERVOIR — 100#/SQ.FT.
   - FLOORS — 100#/SQ.FT.
2. ALLOWABLE UNIT STRESSES:
   - CONCRETE (DESIGN PER ACI-318-77)
     f'c = AS SPECIFIED
   - STRUCTURAL STEEL (DESIGN PER CURRENT EDITION A.I.S.C. "MANUAL OF STEEL CONSTRUCTION")
   - SOIL BEARING (DESIGN MAXIMUM) 2200#/SQ.FT.

GENERAL STRUCTURAL NOTES

1. CONCRETE FOR SIDEWALKS & FILL SHALL BE CLASS "C". ALL OTHERS SHALL BE CLASS "A". SEE SPECIFICATIONS FOR DESIGN STRENGTH.
2. UNLESS OTHERWISE SHOWN ON DRAWINGS, MINIMUM COVER FOR REINFORCING SHALL BE AS FOLLOWS:
   - FOOTINGS — 3"
   - SURFACES CONTACTING FLUID — 2"
   - COLUMNS & PEDESTALS (OVER VERT. REINF.) — 2"
   - WALLS — 2"
   - SLABS — 1"
   - BEAMS (OVER MAIN REINF.) — 2"
   - ALL CONC. POURED DIRECTLY ON GROUND — 3"
3. ALL REINFORCING SHALL BE HELD SECURELY IN POSITION WITH STANDARD ACCESSORIES DURING PLACING OF THE CONCRETE. ACCESSORIES TO HAVE PRIOR APPROVAL.
4. SPLICES IN REINFORCING, WHERE PERMITTED, SHALL BE IN ACCORDANCE WITH THE SPLICE SCHEDULE (UNLESS OTHERWISE NOTED), WITH SPLICE AS REQUIRED FOR LARGER BAR.
5. TERMINATE ALL TOP BARS AT DISCONTINUOUS ENDS OF BEAMS OR SLABS WITH A STANDARD 90° HOOK.
6. SEE SPECIFICATIONS FOR MEMBRANE WATERPROOFING.
7. SEE ARCHITECTURAL AND MECHANICAL DRAWINGS FOR ADDITIONAL EMBEDDED ITEMS NOT DETAILED.
8. UNLESS OTHERWISE NOTED, SPLICES IN TOP REINFORCING SHALL BE MADE AT MID-SPAN.
9. PROVIDE PREMOULDED EXPANSION JOINT MATERIAL WHERE SLAB ON GRADE IS POURED AROUND COLUMNS OR PEDESTALS & AGAINST GRADE BEAMS OR WALLS UNLESS OTHERWISE SHOWN. SEE SPECIFICATIONS.
10. A LIFT HOLE SHALL BE PROVIDED IN EACH PIECE OF FLOOR PLATE.
11. ALL PRECAST LINTELS SHALL BE REINFORCED WITH 2 #4 TOP & BOT. AS A MIN. & SHALL HAVE A MIN. MASONRY END BEARING OF 8".
12. ALL STRUCT OPENINGS AROUND OR AFFECTED BY MECH, ELEC. & PLUMBING EQUIPMENT SHALL BE VERIFIED WITH EQUIPMENT PURCHASHED BEFORE PROCEEDING WITH STRUCT WORK AFFECTED.
13. PROVIDE 3/4" CHAMFER ON ALL EXPOSED CORNERS OF BEAMS, COLUMNS, WALLS, ETC.
14. DOWELS FROM SLABS TO WALLS SHALL MATCH WALL REINF. LAP ACCORDING TO SPLICE SCHEDULE (UNLESS OTHERWISE NOTED).
15. IT IS THE REQUIREMENT AND INTENT OF THE PLANS & SPECS. THAT THE RESERVOIR AND OTHER SUB-GRADE STRUCTURES TO BE CONSTRUCTED WATER TIGHT TO PREVENT EITHER EXFILTRATION OF TANK CONTENTS OR INFILTRATION OF GROUNDWATER; TO THIS END EFFECT, WATERSTOPS SHALL BE USED IN ALL EXTERIOR CONST. J'TS & EXP. JOINTS OF TANKS, PITS & WALLS, WHETHER OR NOT SPECIFICALLY NOTED.
16. CONSTRUCTION JOINTS SHALL BE SPACED AS SHOWN ON THE DRAWINGS UNLESS OTHERWISE APPROVED BY THE ENGINEER.
17. ACTUAL FINISH GRADE ELEVATIONS MAY VARY FROM APPROX. ELEVATIONS SHOWN ON THE STRUCTURAL DWGS. SEE SITE & GRADING PLANS FOR ACTUAL ELEVS.

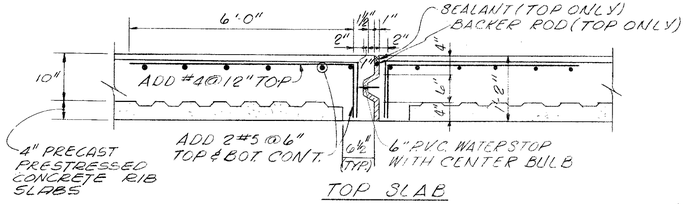

TOP SLAB

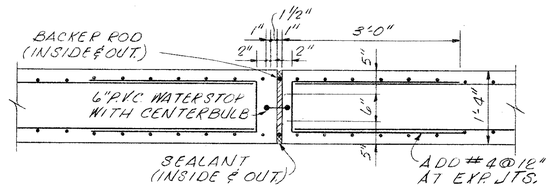

EXTERIOR WALL

TYPICAL EXPANSION JOINTS

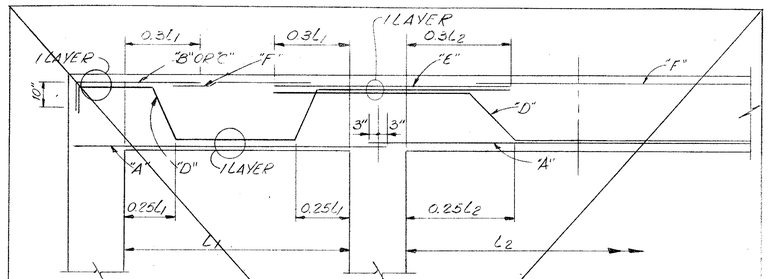

SLAB BENDING SCHEDULE

DELETED!

SLAB NOTES
1. "A" AND "D" BARS SCHEDULED IN THE SAME SPAN SHALL BE ALTERNATED.
2. "D" BARS FROM ADJACENT SPANS SHALL BE ALTERNATED OVER SUPPORT.
3. REINFORCING IN E-W DIRECTION OCCURS IN OUTER LAYER UNLESS OTHERWISE NOTED.
4. "B" BARS ARE SCHEDULED AT THE WEST END OF SLAB "C" "E" "E" BARS ARE SCHEDULED AT THE EAST END OF SLAB.

SLAB SCHEDULE

MARK	A	B	C	D	E	F	REMARKS
S-1	#7@12"	#7@12"		#7@12"	#6@6"	#5@12"	ADD #7@12" BOT. SEE SEC. S-2/2
S-2	#6@12"			#6@12"	#6@6"	#5@12"	
S-3	#6@12"			#6@12"	#6@6"	#5@12"	
S-4	#6@12"			#5@12"		#5@12"	
S-5	#7@12"	#8@12"		#7@12"	#6@6"	#5@12"	
S-6	#6@12"			#6@12"	#6@6"	#5@12"	
S-7	#6@12"			#6@12"	#6@6"	#5@12"	
S-8	#7@12"		#7@12"	#7@12"		#5@12"	ADD #7@12 BOT. SEE SEC. S-2/2

NOTE: PROVIDE #5@12" TEMPERATURE REINFORCING TOP AND BOTTOM IN NORTH-SOUTH DIRECTION TRANSVERSE TO MAIN REINFORCING.

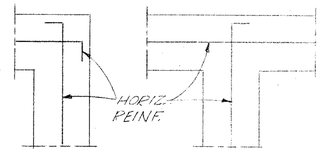

SINGLE LAYER

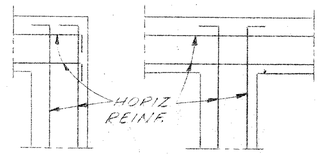

2-LAYERS

TYPICAL CONCRETE WALL CORNER DETAILS
NO SCALE

NOTE:
ALL HOOKS ARE STANDARD 90°

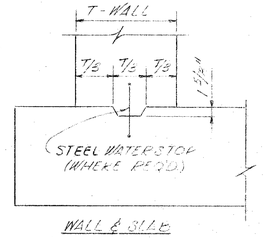

WALL & SLAB

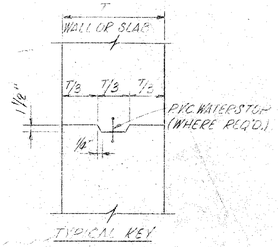

TYPICAL KEY

NOTES:
1. REINF TO CONT. THRU CONST. JOINTS.
2. SEE PLANS FOR LOCATIONS OF JOINTS. THE USE OF DIFFERENT LOCATIONS MUST BE APPROVED BY THE ENGINEER.

TYPICAL CONSTRUCTION JOINTS
NO SCALE

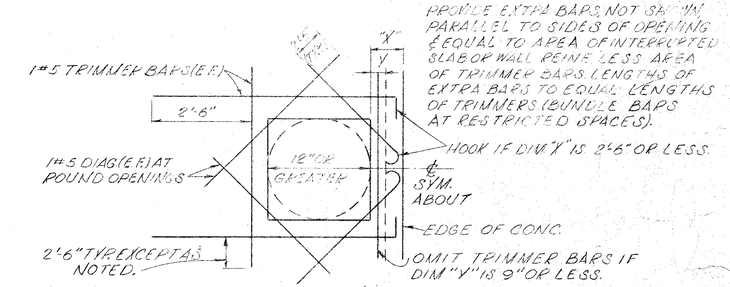

TYPICAL DETAIL - OPENING IN WALL OR SLAB
NO SCALE

MINIMUM SPLICE LENGTHS

BAR SIZE	TOP REINF.	ALL OTHER REINF.
#3	1'-2"	1'-0"
#4	1'-7"	1'-2"
#5	2'-0"	1'-5"
#6	2'-7"	1'-10"
#7	3'-6"	2'-6"
#8	4'-7"	3'-3"
#9	5'-7"	4'-2"
#10	7'-4"	5'-3"
#11	9'-1"	6'-6"

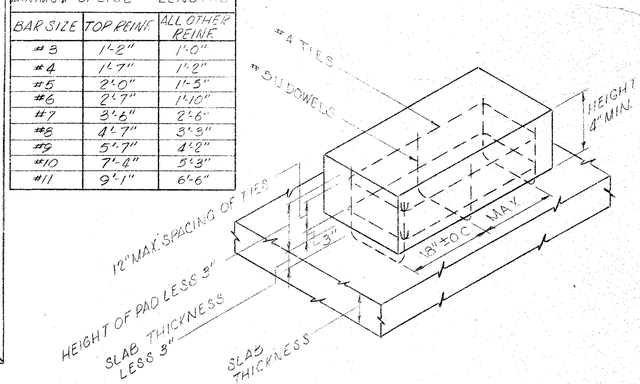

TYPICAL EQUIPMENT PAD DETAIL
NO SCALE

S-1

AS BUILT 8|16|82

NO.	DESCRIPTION	BY	FIRM	DATE	BY	DATE
	REVISIONS	SUBMITTAL			BUREAU OF WATER APPROVAL	

CONSULTING ENGINEERS
SUBMITTED BY: [signature]
REG. ENGR. GA. NO. 11594 DATE 1-29-79
MADISON · MADISON · INTERNATIONAL / FLOOD & ASSOCIATES, INC.

CITY OF ATLANTA
BUREAU OF WATER
T. E. STALLWORTH, JR., DIRECTOR
APPROVED BY: [signature]
DATE: 3-19-79

CITY OF ATLANTA, GEORGIA
DEPARTMENT OF ENVIRONMENT & STREETS BUREAU OF WATER
WATER IMPROVEMENT PROGRAM
EAST SIDE HARTSFIELD INTERNATIONAL AIRPORT
WATER STORAGE AND PUMPING STATION

MADISON · MADISON · INTERNATIONAL / FLOOD & ASSOCIATES, INC.
CONSULTING ENGINEERING
Joint Venture
ATLANTA, GEORGIA

DESIGNED BY: H.R.O. CHECKED BY: S.E.M. DATE: AUG. 1979
DRAWN BY: E.L. SCALE: AS SHOWN

GENERAL NOTES

PROJ. NO. 7733-1 SHEET NO. 31 OF 62

AF 7145

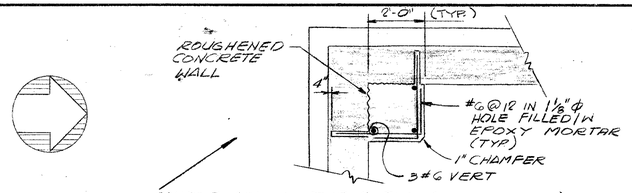

NOTES:

1. CORNER COLUMNS AT N.E., N.W. & S.W. CORNERS ONLY.
2. TOP OF COLUMN TERMINATES AT EL. 918.83

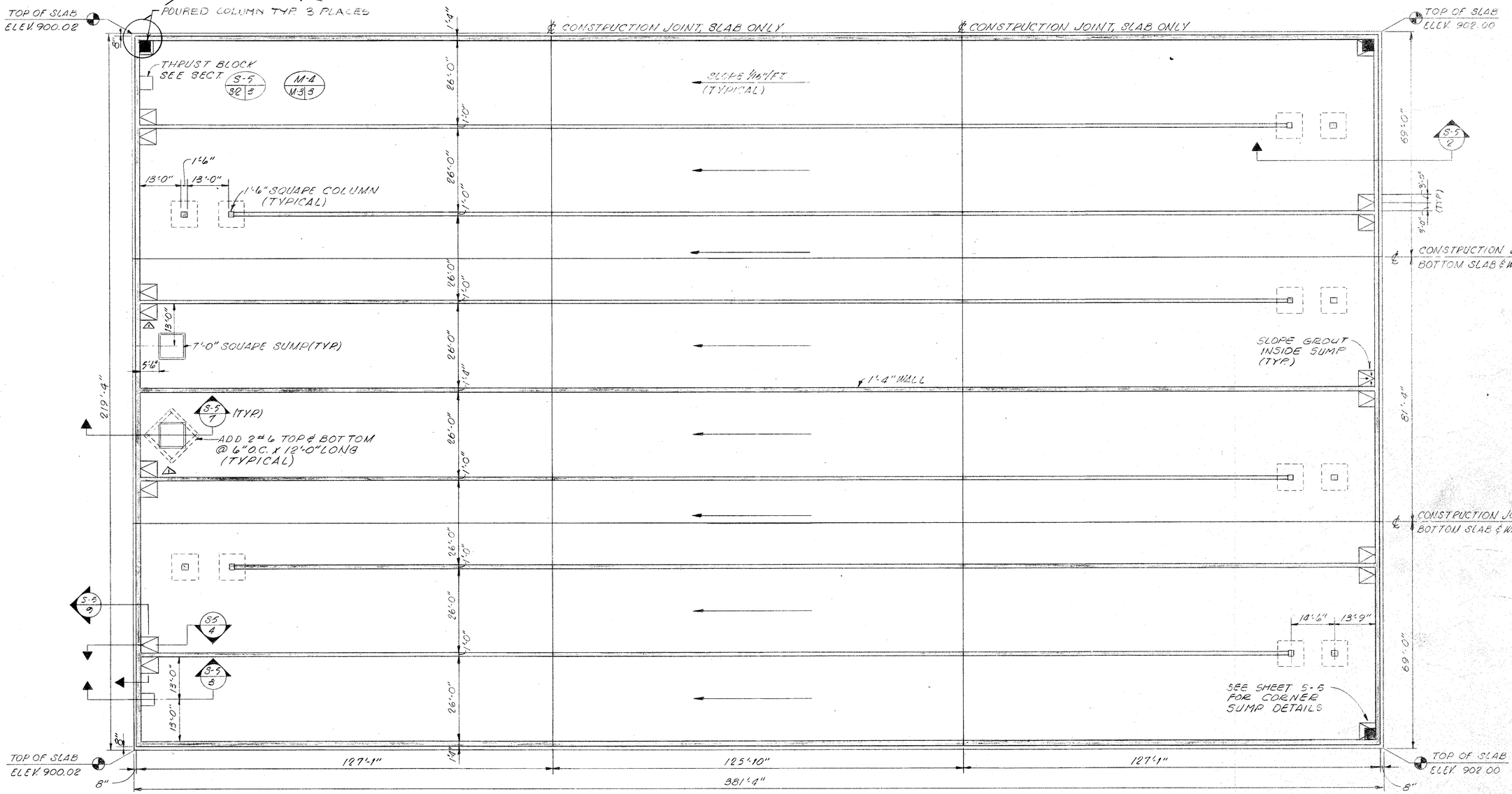

PLAN BOTTOM SLAB

SCALE 1/16"=1'-0"

NOTE: BOTTOM SLAB 1'-6" THICK

S-2

AS BUILT 8|16|82

NO.	DESCRIPTION	BY	FIRM	DATE	BY	DATE
	REVISIONS	SUBMITTAL			BUREAU OF WATER APPROVAL	
1	PRE-BID REVISIONS	FWS	F&A	7/79		

CONSULTING ENGINEERS
SUBMITTED BY: [signature]
REG. ENGR. GA. NO. 11594 DATE 1-29-79
MADISON · MADISON · INTERNATIONAL / FLOOD & ASSOCIATES, INC.

CITY OF ATLANTA
BUREAU OF WATER
T. E. STALLWORTH, JR., DIRECTOR
APPROVED BY: [signature]
DATE: 3-15-79

CITY OF ATLANTA, GEORGIA

DEPARTMENT OF ENVIRONMENT & STREETS BUREAU OF WATER

WATER IMPROVEMENT PROGRAM

EAST SIDE HARTSFIELD INTERNATIONAL AIRPORT
WATER STORAGE AND PUMPING STATION

MADISON · MADISON · INTERNATIONAL / FLOOD & ASSOCIATES, INC.
CONSULTING ENGINEERING
Joint Venture
ATLANTA, GEORGIA

DESIGNED BY: H.R.O. CHECKED BY: S.E.M. DATE AUG. 1979
DRAWN BY: E.L. SCALE AS SHOWN

RESERVOIR
BOTTOM SLAB PLAN

PROJ. NO. 7733-1 SHEET NO. 32 OF 62

AF 7145

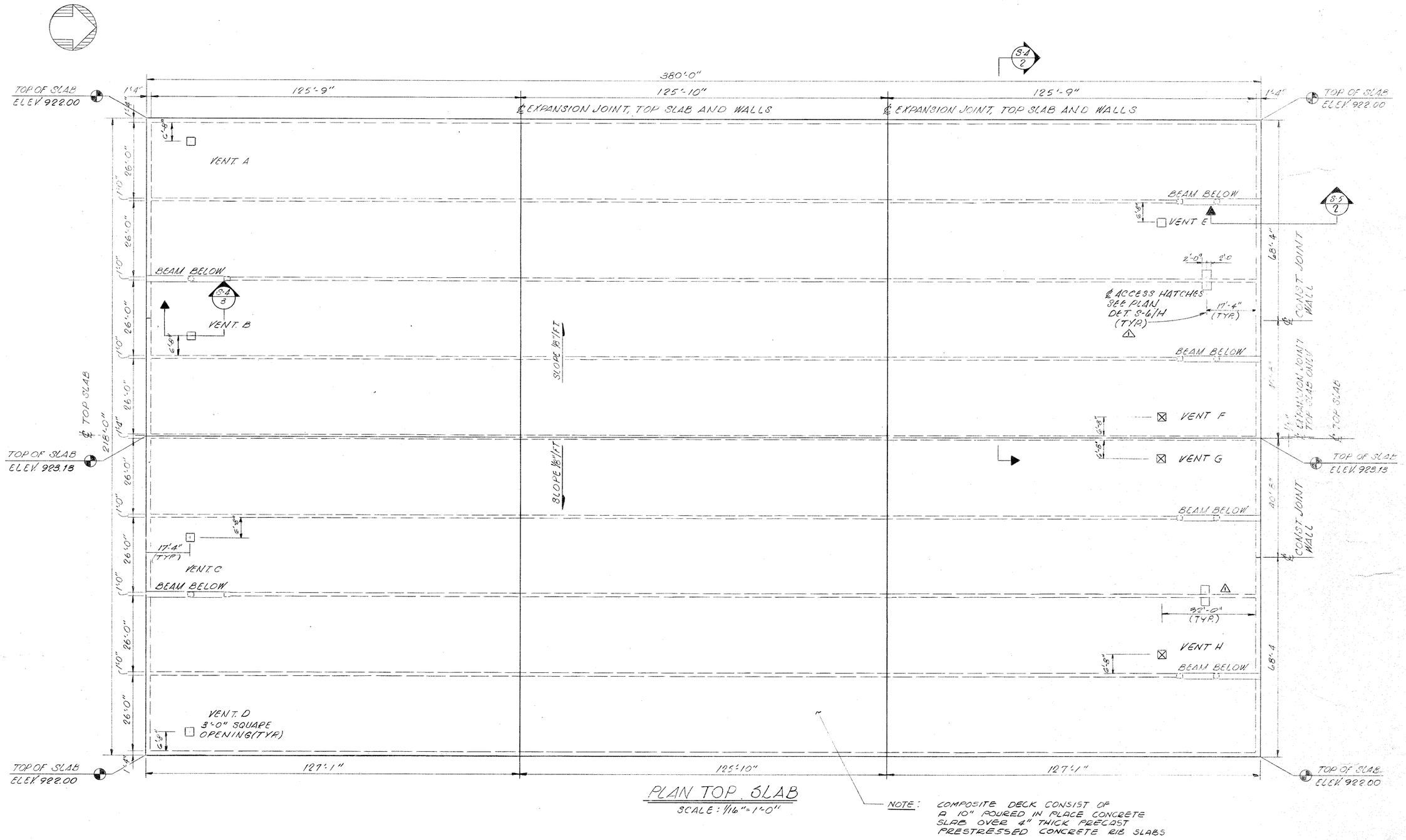

PLAN TOP SLAB
SCALE: 1/16" = 1'-0"

NOTE: COMPOSITE DECK CONSIST OF A 10" POURED IN PLACE CONCRETE SLAB OVER 4" THICK PRECAST PRESTRESSED CONCRETE RIB SLABS

S-3

AS BUILT 8|16|82

NO.	DESCRIPTION	BY	FIRM	DATE	BY	DATE
	REVISIONS	SUBMITTAL			BUREAU OF WATER APPROVAL	
1	PRE-BID REVISIONS	FWS	F&A	7/79		

CONSULTING ENGINEERS
SUBMITTED BY: [signature]
REG. ENGR. GA. NO. 11594 DATE 1-29-79
MADISON · MADISON · INTERNATIONAL / FLOOD & ASSOCIATES, INC.

CITY OF ATLANTA
BUREAU OF WATER
T. E. STALLWORTH, JR., DIRECTOR
APPROVED BY: [signature]
DATE: 3-15-79

CITY OF ATLANTA, GEORGIA
DEPARTMENT OF ENVIRONMENT & STREETS BUREAU OF WATER
WATER IMPROVEMENT PROGRAM
EAST SIDE HARTSFIELD INTERNATIONAL AIRPORT
WATER STORAGE AND PUMPING STATION

MADISON · MADISON · INTERNATIONAL / FLOOD & ASSOCIATES, INC.
CONSULTING ENGINEERING
Joint Venture
ATLANTA, GEORGIA

DESIGNED BY: H.R.O. CHECKED BY: S.E.M. DATE AUG. 1979
DRAWN BY: E.L. SCALE AS SHOWN

RESERVOIR TOP PLAN

PROJ. NO. 7733-1 SHEET NO. 33 OF 62

AF 7145

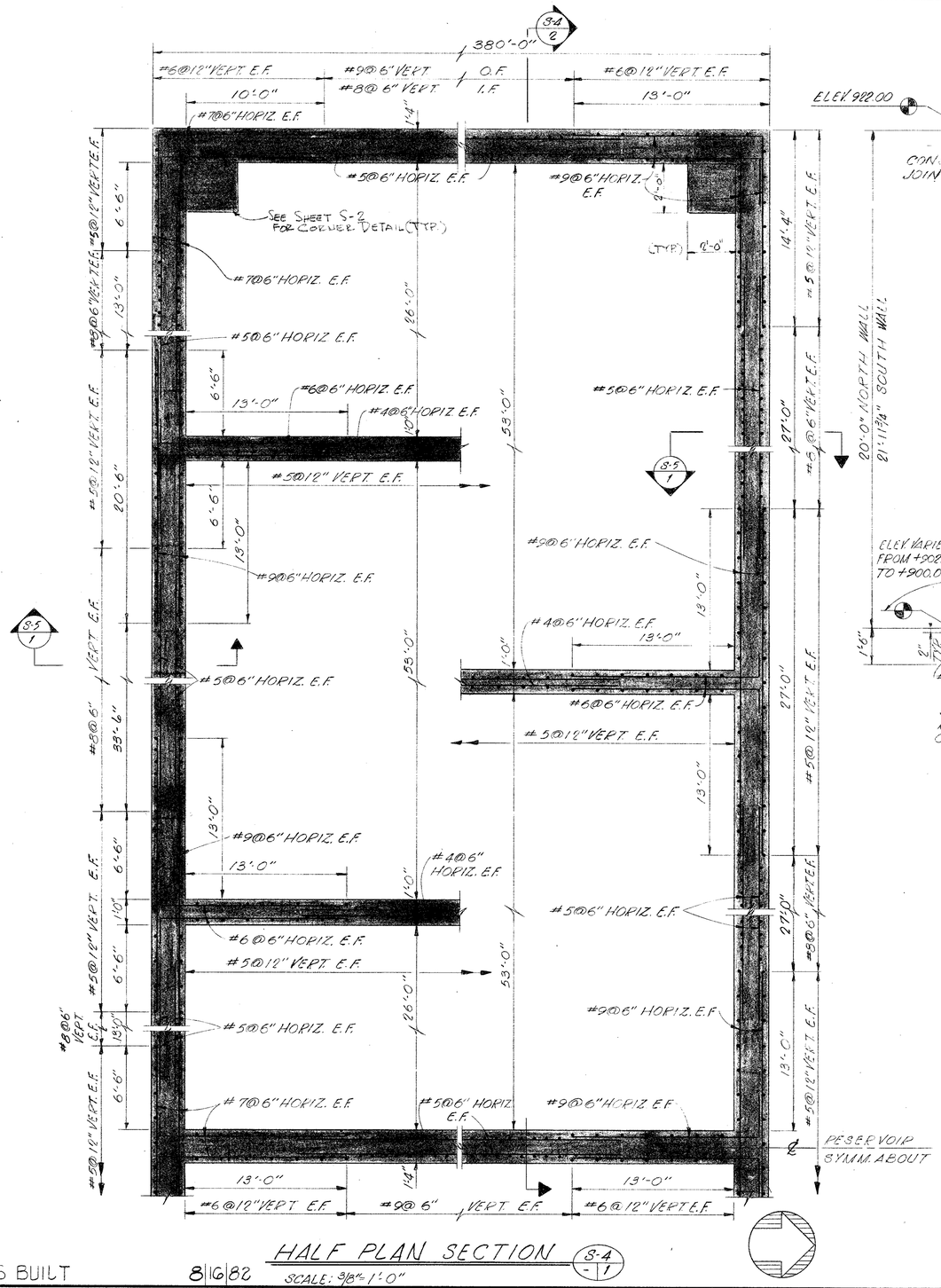

HALF PLAN SECTION (S-4 / 1)

SCALE: 3/8"=1'-0"

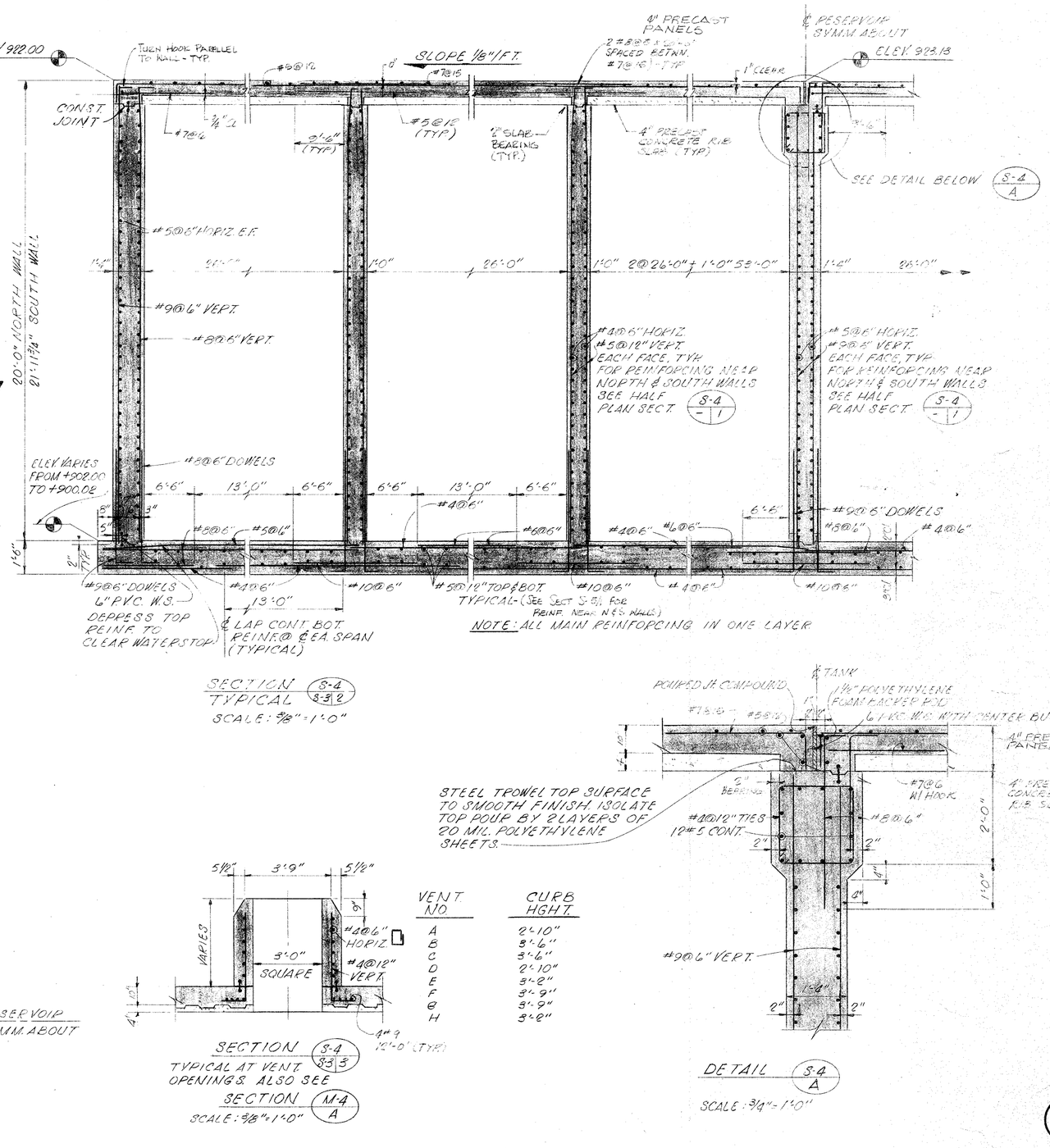

SECTION TYPICAL (S-4 / S-3 2)

SCALE: 3/8"=1'-0"

VENT NO.	CURB HGHT.
A	2'-10"
B	3'-6"
C	3'-6"
D	2'-10"
E	3'-2"
F	3'-9"
G	3'-9"
H	3'-6"

SECTION (S-4 / S-3 3)

TYPICAL AT VENT OPENINGS ALSO SEE SECTION (M-4 / A)

SCALE: 3/8"=1'-0"

STEEL TROWEL TOP SURFACE TO SMOOTH FINISH. ISOLATE TOP POUR BY 2 LAYERS OF 20 MIL. POLYETHYLENE SHEETS

DETAIL (S-4 / A)

SCALE: 3/4"=1'-0"

S-4

AS BUILT 8/16/82

NO.	DESCRIPTION	BY	FIRM	DATE	BY	DATE
	REVISIONS	SUBMITTAL			BUREAU OF WATER APPROVAL	

CONSULTING ENGINEERS
SUBMITTED BY: Stuart S. Sato
REG. ENGR. GA. NO. 11594 DATE 1-29-79
MADISON · MADISON · INTERNATIONAL / FLOOD & ASSOCIATES, INC.

CITY OF ATLANTA
BUREAU OF WATER
T. E. STALLWORTH, JR., DIRECTOR
APPROVED BY: T. E. Stallworth, Jr.
DATE: 3-19-79

CITY OF ATLANTA, GEORGIA

DEPARTMENT OF ENVIRONMENT & STREETS BUREAU OF WATER

WATER IMPROVEMENT PROGRAM

EAST SIDE HARTSFIELD INTERNATIONAL AIRPORT
WATER STORAGE AND PUMPING STATION

MADISON · MADISON · INTERNATIONAL / FLOOD & ASSOCIATES, INC.
CONSULTING ENGINEERING
Joint Venture
ATLANTA, GEORGIA

DESIGNED BY: H.R.O. CHECKED BY: S.E.M. DATE: AUG. 1979
DRAWN BY: E.L. SCALE: AS SHOWN

RESERVOIR SECTIONS

PROJ. NO. 7733-1 SHEET NO. 34 OF 62

A.F. 7145

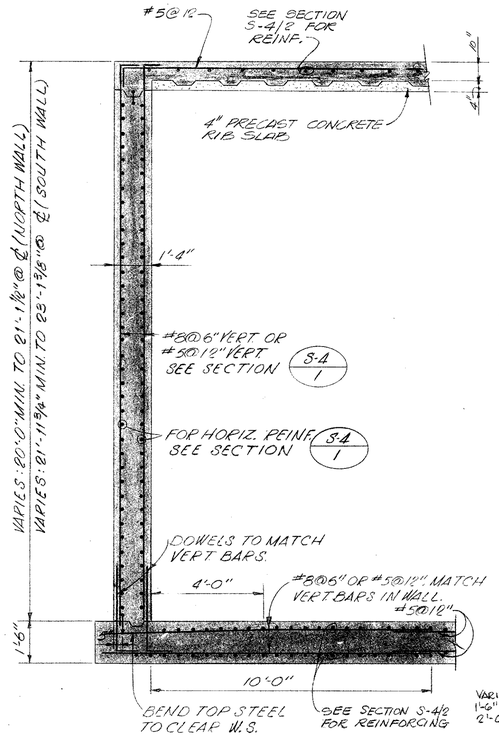

SECTION S-5 / TYPICAL S-4/1
SCALE: 3/8"=1'-0"

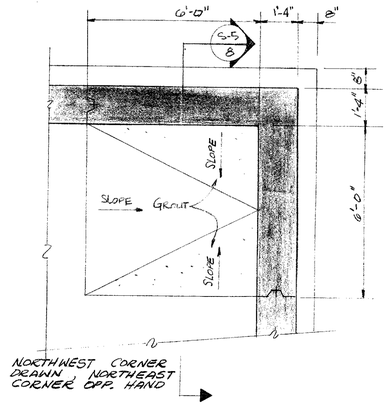

BOTTOM PLAN
CORNER SUMP DETAIL
SCALE: 3/8" = 1'-0"

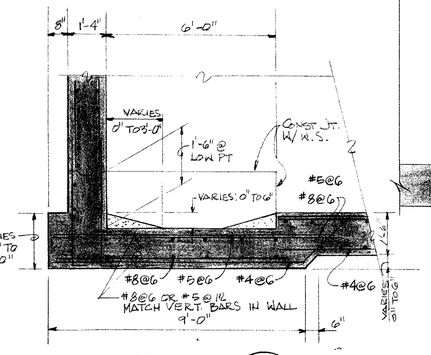

SECTION S-5 / 8
SCALE: 3/8"=1'-0"

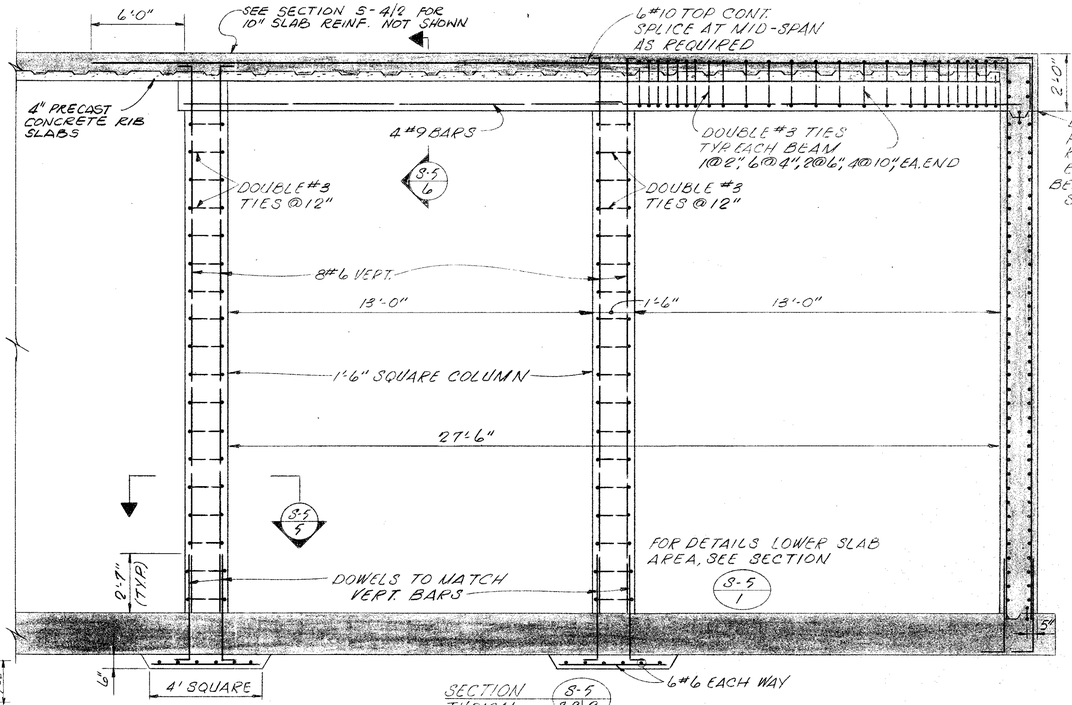

SECTION S-5 / TYPICAL S-2/2
SCALE: 3/8"=1'-0"

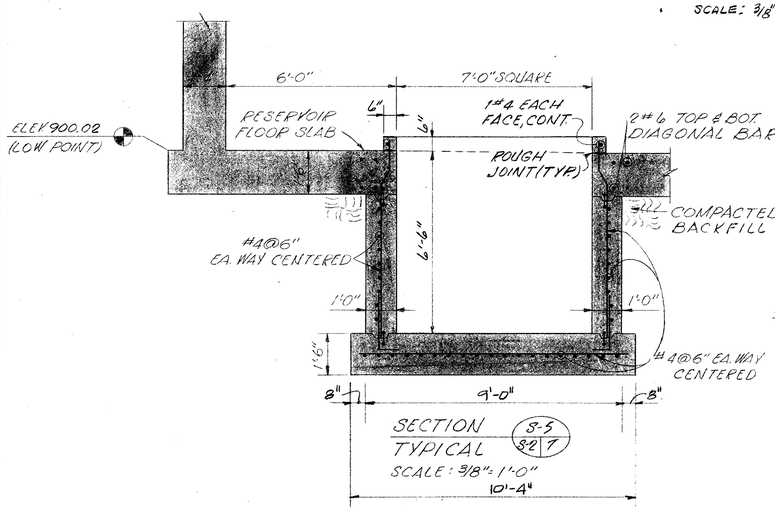

SECTION S-5 / TYPICAL S-2/1
SCALE: 3/8"=1'-0"
10'-4"

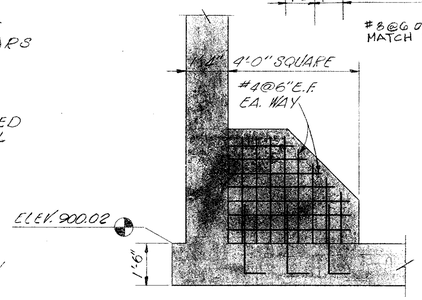

SECTION S-5 / TYPICAL S-2/3
SCALE: 3/8"=1'-0"

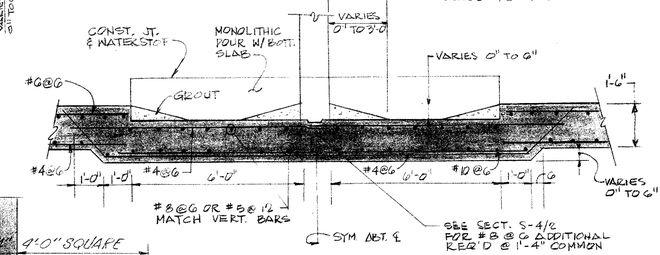

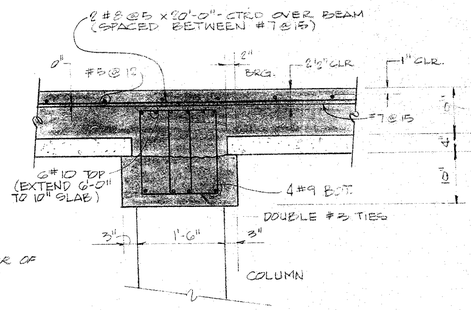

SECTION S-5 / TYPICAL S-2/4
SCALE: 3/8"=1'-0"

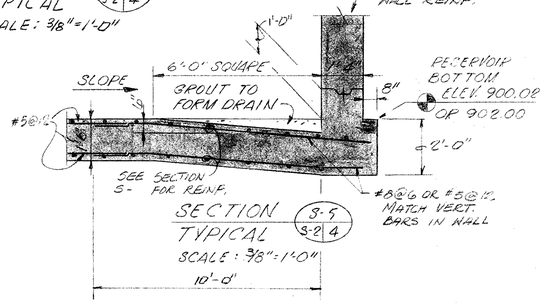

SECTION S-5 / TYPICAL S-2/4
SCALE: 3/8"=1'-0"

SECTION S-5 / TYPICAL S-6
SCALE: 3/4"=1'-0"

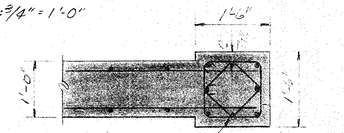

SECTION S-5 / TYPICAL S-5
SCALE: 3/8"=1'-0"

S-5

AS BUILT 8/16/82

NO.	DESCRIPTION	BY	FIRM	DATE	BY	DATE
	REVISIONS	SUBMITTAL			BUREAU OF WATER APPROVAL	

CONSULTING ENGINEERS
SUBMITTED BY: Edward A. Kahn
REG. ENGR. GA. NO. 11594 DATE 1-29-79
MADISON · MADISON · INTERNATIONAL / FLOOD & ASSOCIATES, INC.

CITY OF ATLANTA
BUREAU OF WATER
T. E. STALLWORTH, JR., DIRECTOR
APPROVED BY: [signature]
DATE: 8-15-79

CITY OF ATLANTA, GEORGIA
DEPARTMENT OF ENVIRONMENT & STREETS BUREAU OF WATER
WATER IMPROVEMENT PROGRAM
EAST SIDE HARTSFIELD INTERNATIONAL AIRPORT
WATER STORAGE AND PUMPING STATION

MADISON · MADISON · INTERNATIONAL / FLOOD & ASSOCIATES, INC.
CONSULTING ENGINEERING
Joint Venture
ATLANTA, GEORGIA

DESIGNED BY: H.R.O. CHECKED BY: S.E.M. DATE: AUG. 1979
DRAWN BY: E.L. SCALE: AS SHOWN

RESERVOIR SECTIONS

PROJ. NO. 7733-1 SHEET NO. 35 OF 62

A.F. 7145

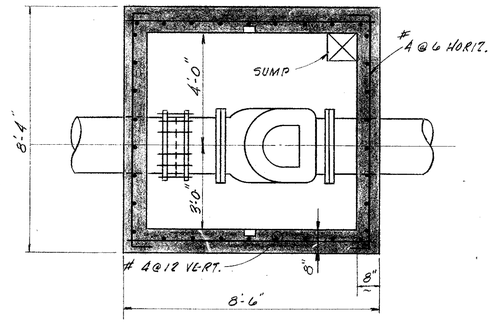

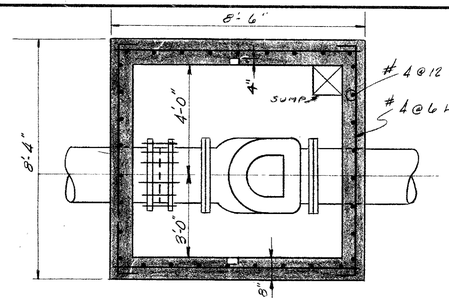

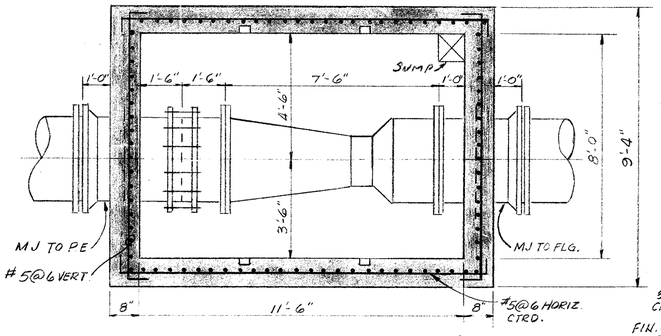

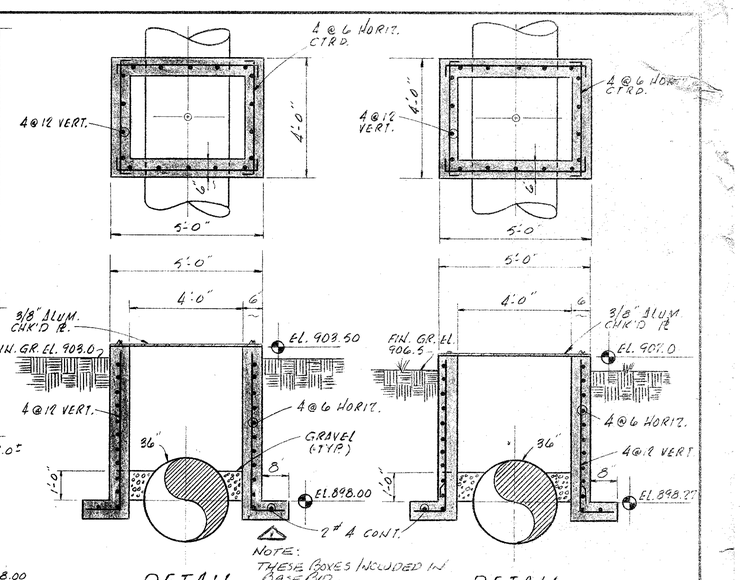

DETAIL
POST CHLORINATOR
BOX NOS 6 & 7
SCALE: 3/8"=1'-0"
S-6 / D

DETAIL
PRE-CHLORINATOR
BOX NO 8
SCALE: 3/8"=1'-0"
S-6 / E

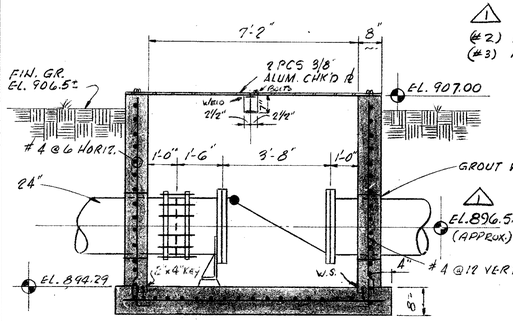

DETAIL - 24" CHECK VALVE
BOX NO 1
SCALE: 3/8"=1'-0"
S-6 / A

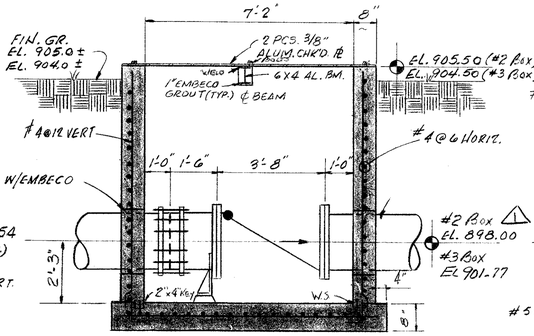

DETAIL - 24" CHECK VALVE
BOX NOS 2 & 3
SCALE: 3/8"=1'-0"
S-6 / B

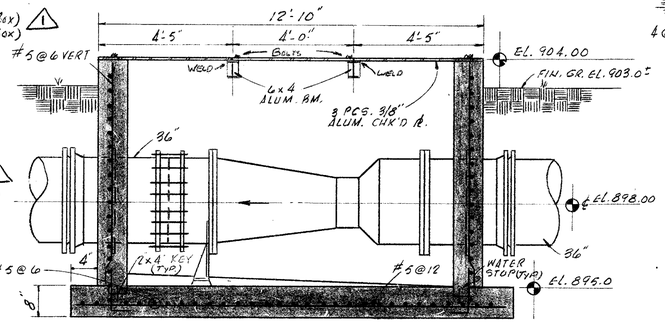

DETAIL - VENTURI BOX NOS 4 & 5
SCALE: 3/8"=1'-0"
S-6 / C

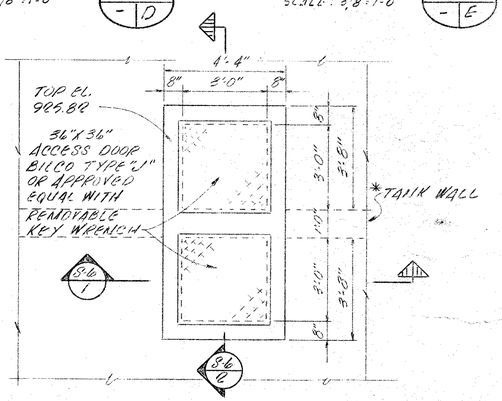

SECTION
S-6 / 1
SCALE: 3/8"=1'-0"
S-6 / I

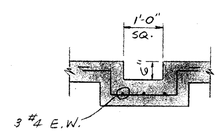

TYPICAL SUMP
SCALE: 1/2"=1'-0"

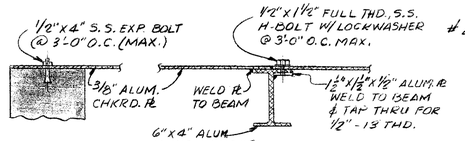

TYPICAL PLATE CONNECTION
AT SUPPORT BEAM
SCALE: 1½"=1'-0"

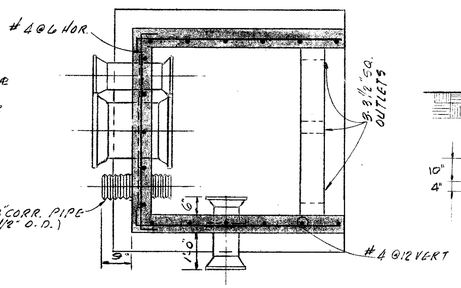

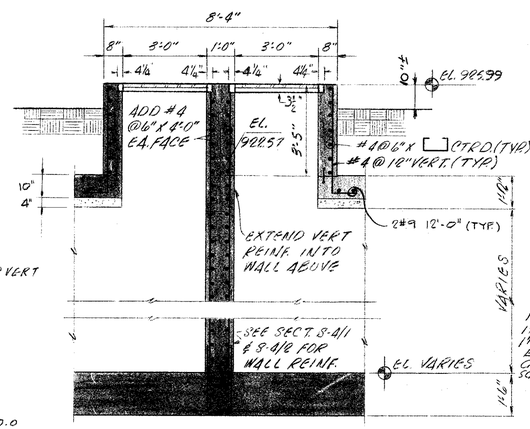

SECTION
S-6 / 2
SCALE: 3/8"=1'-0"
S-6 / I

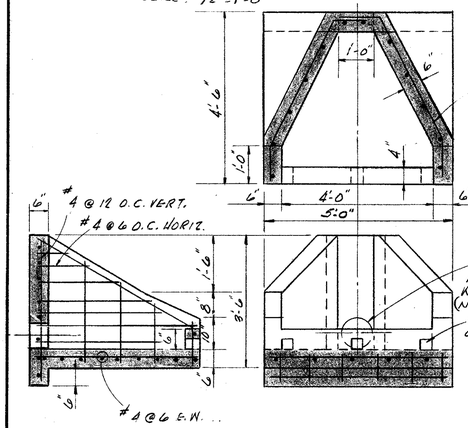

DETAIL
RESERVOIR ROOF DRAIN HEADWALL
BOX NO 13
SCALE: 1/2"=1'-0"
S-6 / G

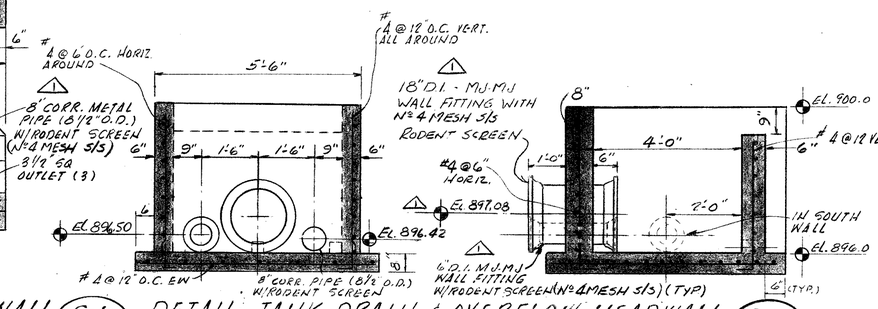

DETAIL - TANK DRAIN & OVERFLOW HEADWALL
BOX NO 12
SCALE: 1/2"=1'-0"
S-6 / F

AS BUILT 8/16/82

NO.	DESCRIPTION	BY	FIRM	DATE	BY	DATE
1	PRE-BID REVISIONS	FWS	F&A	7/79		
	REVISIONS	SUBMITTAL			BUREAU OF WATER APPROVAL	

CONSULTING ENGINEERS
SUBMITTED BY: [signature]
REG. ENGR. GA. NO. 11594 DATE 1-29-79
MADISON · MADISON · INTERNATIONAL / FLOOD & ASSOCIATES, INC.

CITY OF ATLANTA
BUREAU OF WATER
T.E. STALLWORTH, III, DIRECTOR
APPROVED BY: [signature]
DATE: 3-15-79

CITY OF ATLANTA, GEORGIA
DEPARTMENT OF ENVIRONMENT & STREETS BUREAU OF WATER
WATER IMPROVEMENT PROGRAM
EAST SIDE HARTSFIELD INTERNATIONAL AIRPORT
WATER STORAGE AND PUMPING STATION

MADISON · MADISON · INTERNATIONAL / FLOOD & ASSOCIATES, INC.
CONSULTING ENGINEERING
Joint Venture
ATLANTA, GEORGIA

DESIGNED BY: D.F.R. CHECKED BY: C.V. DATE: AUG. 1979
DRAWN BY: A. J. S. SCALE: AS SHOWN

PUMPING STATION
CONCRETE BOX DETAILS

PROJ. NO. 7733-1 SHEET NO. 36 OF 62

S-6

AF 7145

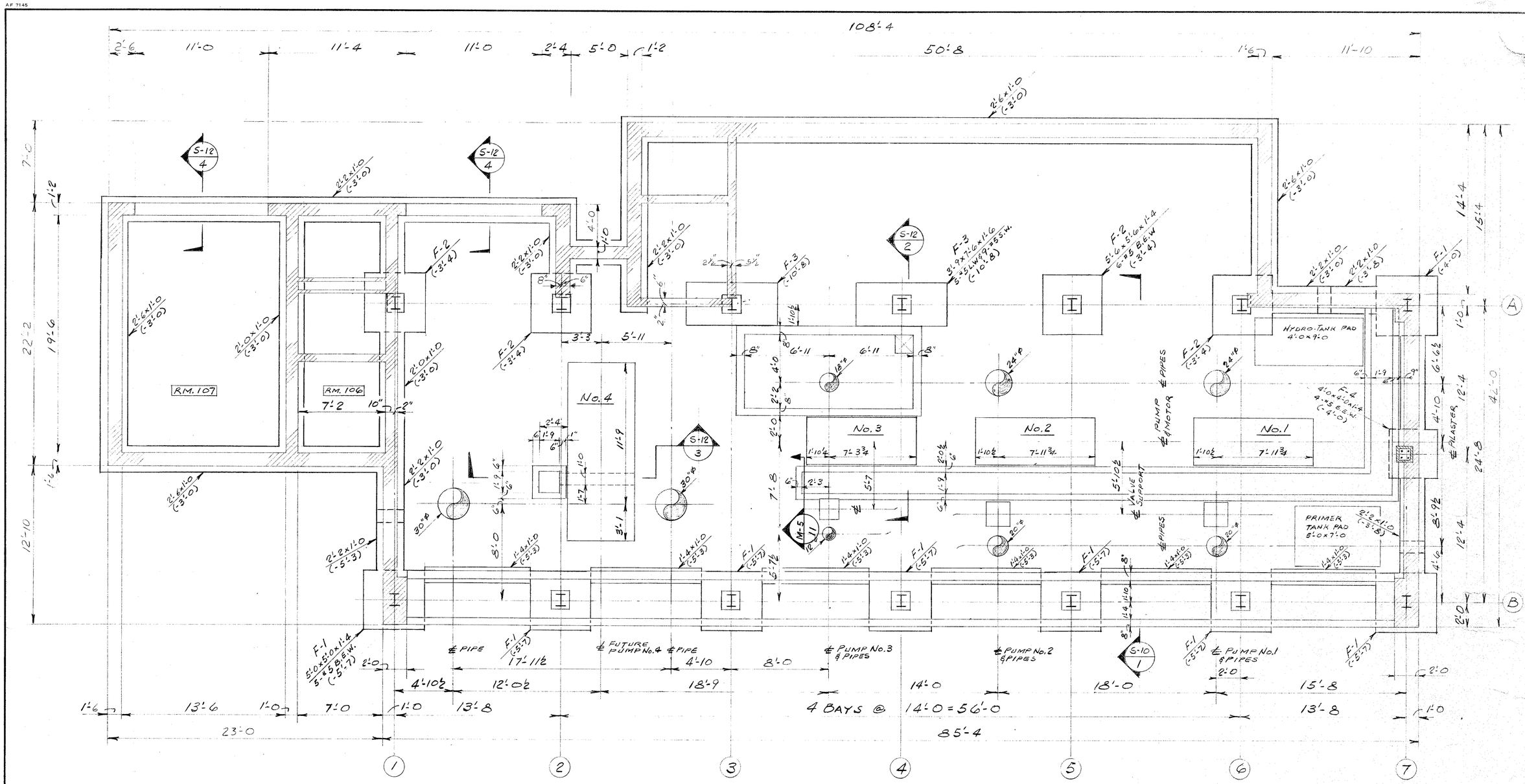

FOUNDATION PLAN

FINISHED FIRST FLOOR EL. 908.00'.
FLOOR CONSTR: 6" SLAB ON GRADE W/2 LAYERS 6x6-W4xW4 W.W.F.
BOTTOM OF FOOTINGS SHOWN THUS (-0'-0) ARE REFERENCED TO 1ST FL. EL. 908.00'
SEE ARCH. DWGS. FOR WALL DIM'S NOT SHOWN.
NOTE: TOP OF 6" SLAB 3/4" BELOW EL. 908.00 EXCEPT FOR ROOMS 106 & 107 TO ACCOMODATE QUARRY TILE FLOOR.

AS BUILT 8/16/82

S-7

NO.	DESCRIPTION	BY	FIRM	DATE	BY	DATE
	REVISIONS		SUBMITTAL		BUREAU OF WATER APPROVAL	

CONSULTING ENGINEERS
SUBMITTED BY: JULIAN C. MADISON
REG. ENGR. GA. NO. 10072 DATE 1-29-79
MADISON · MADISON · INTERNATIONAL / FLOOD & ASSOCIATES, INC.

CITY OF ATLANTA
BUREAU OF WATER
T. E. STALLWORTH, JR., DIRECTOR
APPROVED BY: [signature]
DATE: 3-15-79

CITY OF ATLANTA, GEORGIA

DEPARTMENT OF ENVIRONMENT & STREETS BUREAU OF WATER
WATER IMPROVEMENT PROGRAM
EAST SIDE HARTSFIELD INTERNATIONAL AIRPORT
WATER STORAGE AND PUMPING STATION

MADISON · MADISON · INTERNATIONAL / FLOOD & ASSOCIATES, INC.
CONSULTING ENGINEERING
Joint Venture
ATLANTA, GEORGIA

DESIGNED BY: K.K.S. CHECKED BY: K.K.S. DATE: AUG. 1979
DRAWN BY: R.I.B. SCALE: 1/4" = 1'-0"

FOUNDATION PLAN

PROJ. NO. 7749-02 SHEET NO. 37 OF 62

AF 7145

GENERAL NOTES FOR PUMP STATION

SEE SPECIFICATIONS FOR: QUALITY OF CONSTRUCTION REQUIRED; PERFORMANCE LEVELS OR WORKMANSHIP; MANUFACTURING AND INDUSTRY STANDARDS; STRENGTH AND PHYSICAL REQUIREMENTS OF MATERIALS; CONFORMANCE TO CODES AND REGULATIONS; GUARANTEE REQUIREMENTS.

SEE ARCHITECTURAL, MECHANICAL AND ELECTRICAL DRAWINGS FOR OTHER PERTINENT INFORMATION RELATED TO STRUCTURAL WORK AND COORDINATE AS REQUIRED.

DESIGN LIVE LOADS: ROOF -20 PSF; WIND LOAD -15 PSF; SLAB ON GRADES 600 PSF.

GENERAL CONTRACTOR SHALL VERIFY ALL DIMENSIONS AND CONDITIONS RELATED TO EXISTING CONSTRUCTION, EXISTING SERVICES AND THE SITE.

FOUNDATIONS

THE GENERAL CONTRACTOR AND THE FOUNDATION CONTRACTOR SHALL FAMILIARIZE HIMSELF WITH THE SURVEY AND THE SUB-SURFACE INVESTIGATION REPORT BEFORE STARTING CONSTRUCTION.

DESIGN BEARING PRESSURE: 2500 PSF.

THE SITE, PRIOR TO FILLING, SHALL BE THOROUGHLY PROOFROLLED WITH A LOADED DUMP TRUCK TO DENSIFY THE SURFACE SOILS AND DETECT LOOSE OR WATER-SOFTENED ZONES. ANY ORGANIC TOPSOIL OR SOFT MATERIAL ENCOUNTERED SHOULD BE UNDERCUT AND REPLACED WITH WELL COMPACTED FILL OR GRAVEL.
THE EARTH FILL SHOULD BE PLACED IN THIN UNIFORM LIFTS (ABOUT 8 INCHES) AND EACH LIFT COMPACTED TO 95% OF THE LABORATORY MAXIMUM DRY DENSITY AS DETERMINED BY ASTM METHOD D-698 (STANDARD PROCTOR)
THE MOISTURE CONTENT DURING PLACEMENT SHOULD BE WITHIN 3 PERCENT OF THE LABORATORY DETERMINED OPTIMUM MOISTURE CONTENT.

NOTIFY THE ARCHITECT OF ANY UNUSUAL SOIL CONDITIONS THAT ARE IN VARIANCE WITH TEST BORINGS, SUCH AS SPRING OR SEEPAGE WATER ENCOUNTERED, OR WHEN A DIFFERENT BEARING MATERIAL IS EVIDENT AND THERE IS A QUESTION OF THE BEARING CAPACITY.

ADEQUATE TEMPORARY BRACING SHALL BE PROVIDED FOR ALL WALLS BEFORE BACKFILLING AGAINST THEM AND COMPACTING.

FOUNDATION ELEVATIONS SHOWN ON PLAN ARE BOTTOM ELEVATIONS.

STEP FOOTINGS AT A RATIO OF ONE VERTICAL TO TWO HORIZONTAL, WITH A MAXIMUM VERTICAL STEP OF 2'-0", UNLESS OTHERWISE NOTED.

CAST-IN-PLACE CONCRETE

CAST-IN-PLACE CONCRETE WORK SHALL CONFORM TO THE LATEST AMERICAN CONCRETE INSTITUTE CODES AND STANDARDS LISTED IN THE SPECIFICATIONS, EXCEPT AS MODIFIED THEREIN OR ON THE DRAWINGS.

ULTIMATE COMPRESSIVE STRENGTH OF CONCRETE IN 28 DAYS: 3000 PSI.

REINFORCING BARS; ASTM A 615, GRADE 60.

WELDED WIRE FABRIC: ASTM A 185.

REFER TO ARCHITECTURAL DRAWINGS FOR LOCATION AND EXTENT OF FINISHES OR OTHER TREATMENTS TO EXPOSED CONCRETE.

PROVIDE 6x6 - w 1.4 x w 1.4 WELDED WIRE FABRIC IN ALL SLABS ON GRADE, UNLESS OTHERWISE NOTED.

PLACE WELDED WIRE FABRIC, IN SLABS, 1½" DOWN FROM TOP OF SLAB, UNLESS OTHERWISE NOTED.

PROVIDE CONTROL JOINTS IN ALL SLABS ON GRADE. THE MAXIMUM SPACING OF CONTROL JOINTS SHALL BE 20'-0"O.C., UNLESS OTHERWISE NOTED.

LAP REINFORCING BAR SPLICES 36 BAR DIAMETERS, UNLESS OTHERWISE NOTED.

DETERMINE SIZE AND LOCATION OF MECHANICAL EQUIPMENT, AND MAKE PROVISIONS FOR BOLTS, SLEEVES, PADS, ETC., FROM MANUFACTURER'S CERTIFIED DRAWINGS. THIS WORK SHALL BE COORDINATED WITH THE TRADES INVOLVED.

MASONRY WORK (UNLESS OTHERWISE NOTED)

MASONRY WORK SHALL CONFORM TO THE LATEST EDITIONS OF THE REFERENCES AND STANDARDS LISTED IN THE SPECIFICATIONS, EXCEPT AS MODIFIED THEREIN OR ON THE DRAWINGS.

ULTIMATE COMPRESSIVE STRENGTH OF MASONRY (F'M) TO BE 1350 PSI. INSPECTION IS REQUIRED DURING CONSTRUCTION.

WALL CONSTRUCTION UNDER MASONRY BEARING STRUCTURAL MEMBERS SHALL BE AS FOLLOWS:

PROVIDE SOLID MASONRY, 16" LONG AND 8" HIGH, CENTERED UNDER EACH WALL BEARING OPEN WEB STEEL JOISTS H-SERIES, SUPPORTING ROOF LOADS.

PROVIDE SOLID MASONRY, 32" LONG AND 16" HIGH, CENTERED UNDER EACH WALL BEARING STEEL BEAM.

HORIZONTAL REINFORCING SHALL BE: TRUSS TYPE, #9 GAUGE SIDE AND CROSS RODS, FOR INTERIOR NON-BEARING WALLS AND PARTITIONS AT 16" ON CENTER VERTICALLY; TRUSS TYPE, 3/16" SIDE RODS AND #9 GAUGE CROSS RODS, FOR ALL SHEAR, BEARING AND EXTERIOR WALLS AT 16" ON CENTER VERTICALLY; LADDER TYPE, 3/16" SIDE RODS AND #9 GAUGE CROSS RODS, FOR ALL VERTICALLY REINFORCED AND/OR GROUTED WALLS AT 8" ON CENTER VERTICALLY, OR THE DOUBLE LADDER TYPE AT 16" ON CENTER.

ALL UNITS SHALL BE LAID WITH FULL MORTAR COVERAGE ON HEAD, BED (FACE SHELLS), WEBS AND COLLAR JOINTS.

STRUCTURAL METAL

DETAIL, FABRICATE AND ERECT STRUCTURAL STEEL IN ACCORDANCE WITH THE LATEST AISC AND OTHER CODES, STANDARDS AND SPECIFICATIONS LISTED IN THE PROJECT SPECIFICATIONS, EXCEPT AS MODIFIED THEREIN OR ON THE DRAWINGS.

TYPE OF CONSTRUCTION: TYPE 2
STRUCTURAL STEEL: ASTM A 36
BOLTS: ASTM A 325F.
FIELD CONNECTION: 3/4" HIGH STRENGTH BOLTS, UNLESS OTHERWISE NOTED.

WORK STRUCTURAL DRAWINGS WITH ARCHITECTURAL, MECHANICAL AND ELECTRICAL DRAWINGS FOR CLEARANCES, ATTACHMENTS, ETC.

PROVIDE ANGLE WALL ANCHORS, PER PART 4, AISC MANUAL OF STEEL CONSTRUCTION, FOR BEAMS BEARING ON MASONRY WALLS. ANGLE ANCHORS SHALL BE WELDED TO BEAMS.

STEEL BEAMS SHALL BEAR A MINIMUM OF 8" ON MASONRY, UNLESS OTHERWISE NOTED.

WELD MASONRY WALL ANCHOR @16" VERTICALLY TO ALL COLUMNS IN CONTACT WITH MASONPY WALLS.

STEEL JOISTS

DETAIL, FABRICATE AND ERECT STEEL JOISTS IN ACCORDANCE WITH THE LATEST SJI, AISC AND OTHER CODES, STANDARDS AND SPECIFICATIONS LISTED IN THE PROJECT SPECIFICATIONS, EXCEPT AS MODIFIED THEREIN OR IN THE DRAWINGS.

PROVIDE BRIDGING IN ACCORDANCE WITH THE LATEST SJI SPECIFICATIONS, END OF BRIDGING LINES SHALL BE ANCHORED TO MASONRY WALLS.

WELD ALL STEEL JOISTS TO SUPPORTING STEEL MEMBERS, UNLESS OTHERWISE NOTED.

STEEL LINTEL SCHEDULE

PROVIDE STEEL LINTELS AS PER FOLLOWING SCHEDULE IN ALL MASONRY WALL OPENINGS AS REQUIRED, OR AS SHOWN ON ARCHITECTURAL, MECHANICAL AND ELECTRICAL DRAWINGS.

FOR UP TO AND INCLUDING 6" WALLS

FOR OPENINGS UP TO 5'-0": WT 4 x 8.5
FOR OPENINGS FROM 5'-0" TO 7'-0": WT 5 x 10.5

FOR 8" WALLS OR THICKER

FOR OPENINGS UP TO 4'-0": L 3-1/2 x 3-1/2 x 1/4
FOR OPENINGS FROM 4'-0" TO 5'-0": L 4 x 3-1/2 x 5/16 LLV
FOR OPENINGS FROM 5'-0" TO 6'-0": L 5 x 3-1/2 x 5/16 LLV
FOR OPENINGS FROM 6'-0" TO 7'-0": L 6 x 3-1/2 x 5/16 LLV

ALL LINTELS SHALL HAVE A MINIMUM 6" BEARING AT EACH END.

ALL LINTELS SHALL BEAR ON 8" OF SOLID MASONRY, UNLESS OTHERWISE NOTED.

USE ONE ANGLE FOR EACH 4" WYTHE OF MASONRY. MINIMUM THICKNESS OF LINTELS IN EXTERIOR WALLS SHALL BE 5/16".

ALL STEEL LINTEL BEAMS WITH BOTTOM PLATES SHALL BEAR A MINIMUM OF 8" ON 16" THICK SOLID MASONRY AND PLATES SHALL NOT EXTEND BEYOND MASONRY OPENING, UNLESS OTHERWISE NOTED.

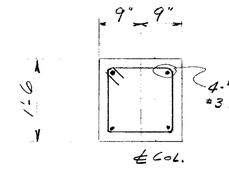

TYP PIER SECTION

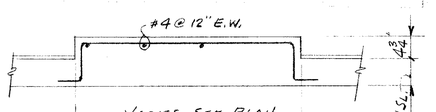

TYP TANK PAD DETAILS

NOTE: VERIFY EXACT SIZE, LOCATION & ANCHOR BOLTS W/ MANUFACTURER

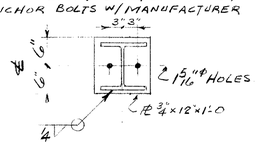

TYP BASE PL DET.

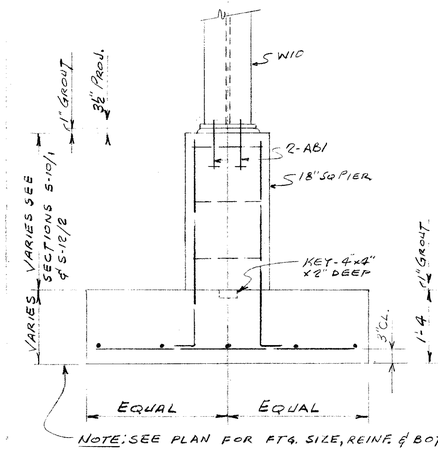

NOTE: SEE PLAN FOR FTG. SIZE, REINF. & BOT. EL. (TYP.)

TYP COL. FTG W/ PIER
(A1 THRU A6 & B2 THRU B6)

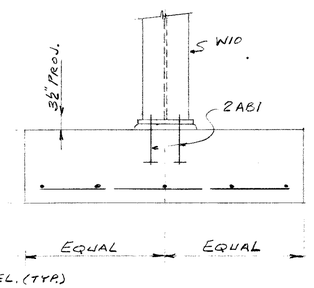

TYP COL. FTG. WITHOUT PIER
(COL'S. A7, B1 & B7 ONLY)

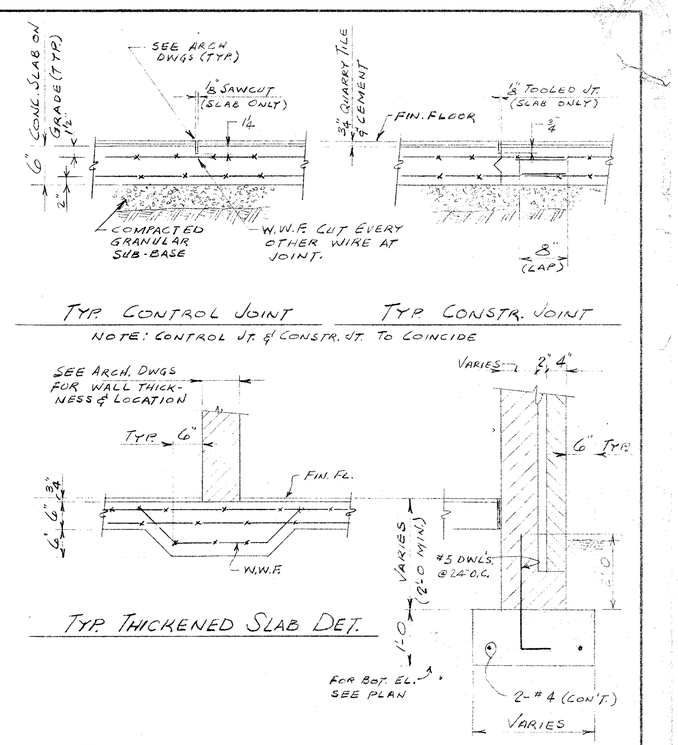

TYP CONTROL JOINT — TYP CONSTR. JOINT

NOTE: CONTROL JT. & CONSTR. JT. TO COINCIDE

TYP THICKENED SLAB DET.

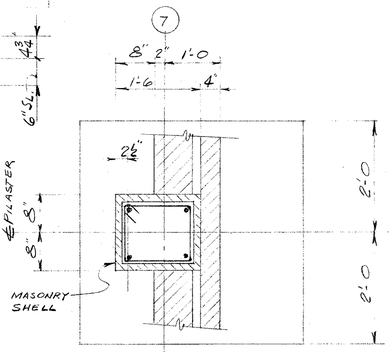

PLAN

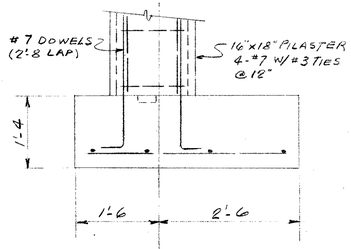

PILASTER FTG. F-4

TYP EXTERIOR FTG.
(INTERIOR FTG'S SIMILAR)

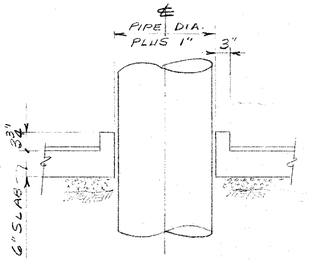

TYP PIPE THRU SLAB CURB DET.

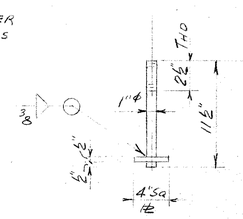

ANCHOR BOLT-AB1

AS BUILT 8/16/82

S-8

NO.	DESCRIPTION	BY	FIRM	DATE	BY	DATE
	REVISIONS		SUBMITTAL		BUREAU OF WATER APPROVAL	

CONSULTING ENGINEERS
SUBMITTED BY: JULIAN C. MADISON
REG. ENGR. GA. NO. 10072 DATE 1-29-79
MADISON-MADISON-INTERNATIONAL / FLOOD & ASSOCIATES, INC.

CITY OF ATLANTA
BUREAU OF WATER
T.E. STALLWORTH, JR. DIRECTOR
APPROVED BY:
DATE: 3-15-79

CITY OF ATLANTA, GEORGIA
DEPARTMENT OF ENVIRONMENT & STREETS BUREAU OF WATER
WATER IMPROVEMENT PROGRAM
EAST SIDE HARTSFIELD INTERNATIONAL AIRPORT
WATER STORAGE AND PUMPING STATION

MADISON · MADISON · INTERNATIONAL / FLOOD & ASSOCIATES, INC.
CONSULTING ENGINEERING
Joint Venture
ATLANTA, GEORGIA

DESIGNED BY: K.K.S. CHECKED BY K.K.S. DATE AUG. 1979
DRAWN BY: R.I.B SCALE NONE

GENERAL NOTES AND FOUNDATION DETAILS

PROJ. NO. 7749-02 SHEET NO. 38 OF 62

AF 7145

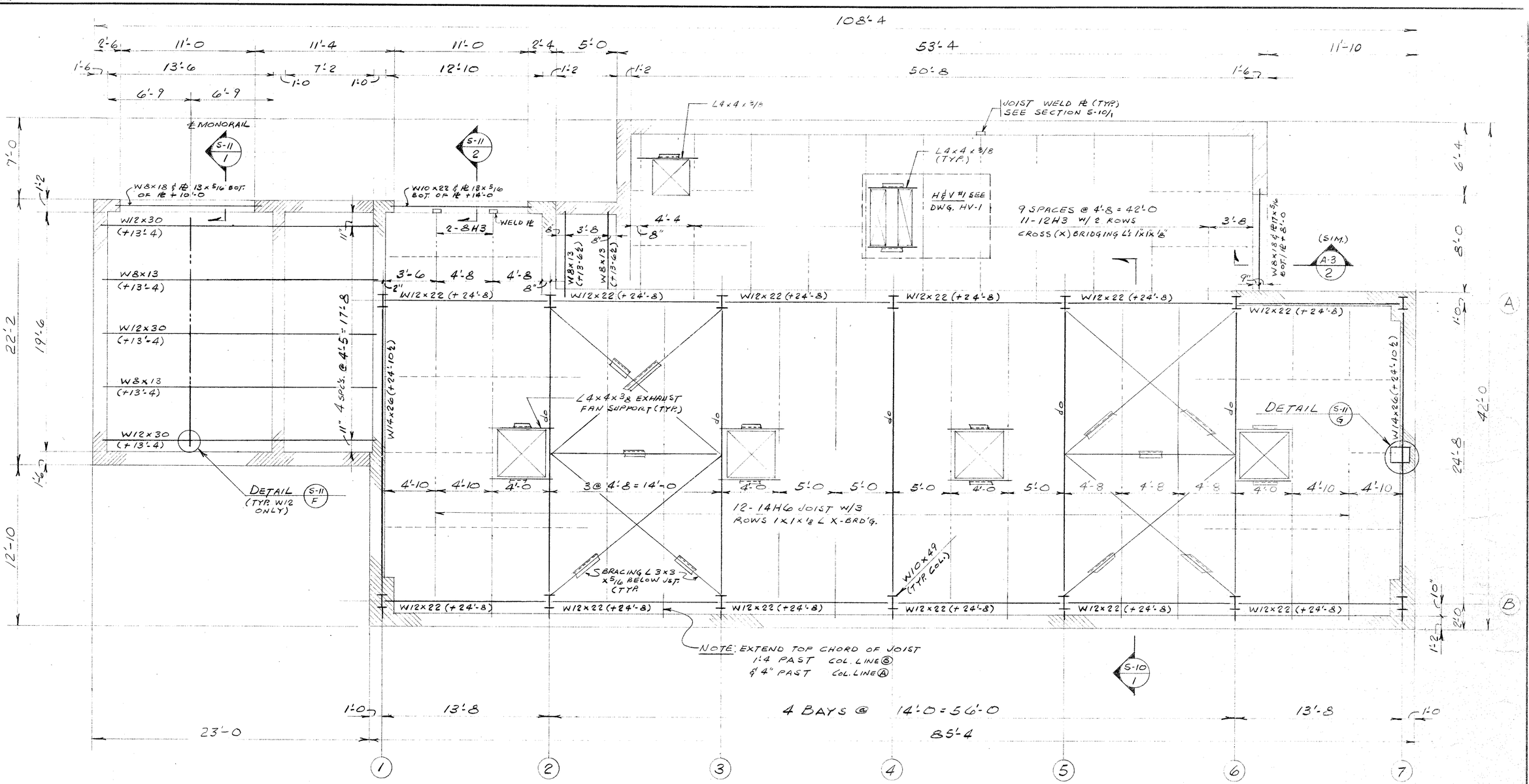

ROOF FRAMING PLAN

ROOF CONSTR: "BOWMAN FM-2" - 1½" x 20 GA. ACOUSTICAL METAL DECK (S_{MIN} = 0.262 IN.³) OR APP. EQUAL WELDED TO SUPPORTING STEEL.
TOP OF STEEL NOTED (+0'-0) REFERENCED TO FIN. FIRST FL. EL. 908.00'
BRIDGING LINES ARE NOTED THUS _____.
SEE MECH. & ARCH. DWGS FOR OPENINGS NOT SHOWN

NORTH

S-9

AS BUILT 8/16/82

NO.	DESCRIPTION	BY	FIRM	DATE	BY	DATE
	REVISIONS		SUBMITTAL			BUREAU OF WATER APPROVAL

CONSULTING ENGINEERS
SUBMITTED BY: JULIAN C. MADISON
REG. ENGR. GA. NO. 10072 DATE 1-29-79
MADISON · MADISON · INTERNATIONAL / FLOOD & ASSOCIATES, INC.

CITY OF ATLANTA
BUREAU OF WATER
T.E. STALLWORTH, JR., DIRECTOR
APPROVED BY:
DATE: 3-19-79

CITY OF ATLANTA, GEORGIA
DEPARTMENT OF ENVIRONMENT & STREETS BUREAU OF WATER
WATER IMPROVEMENT PROGRAM
EAST SIDE HARTSFIELD INTERNATIONAL AIRPORT
WATER STORAGE AND PUMPING STATION

MADISON · MADISON · INTERNATIONAL / FLOOD & ASSOCIATES, INC.
CONSULTING ENGINEERING
Joint Venture
ATLANTA, GEORGIA

DESIGNED BY: K.K.S. CHECKED BY: K.K.S. DATE AUG. 1979
DRAWN BY: R.I.B. SCALE 1/4" = 1'-0"

ROOF FRAMING PLAN

PROJ. NO. 7749-02 SHEET NO. 39 OF 62

AF 7145

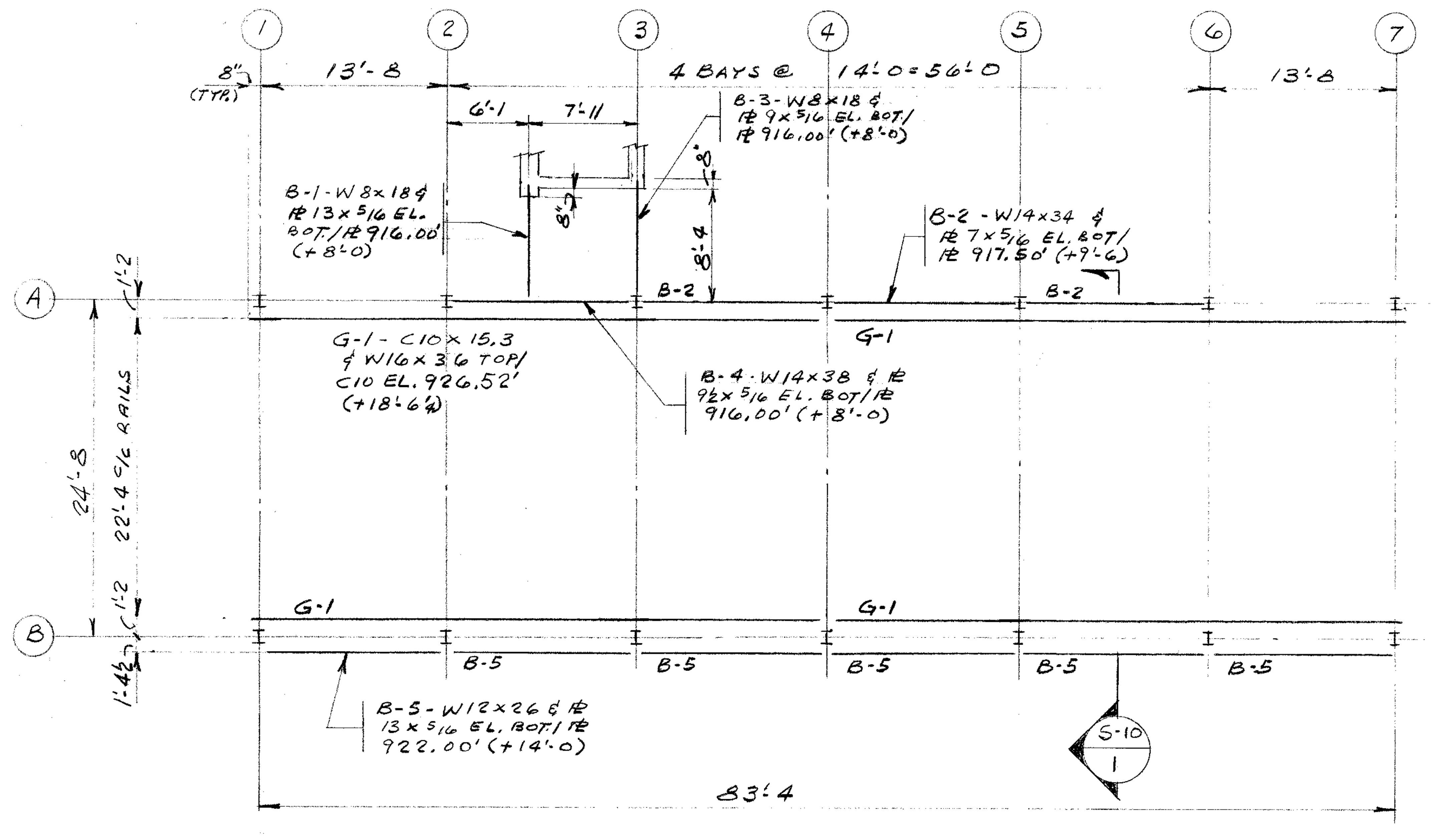

CRANE GIRDER AND LINTEL FRAMING PLAN

SCALE: 1/8"=1'-0

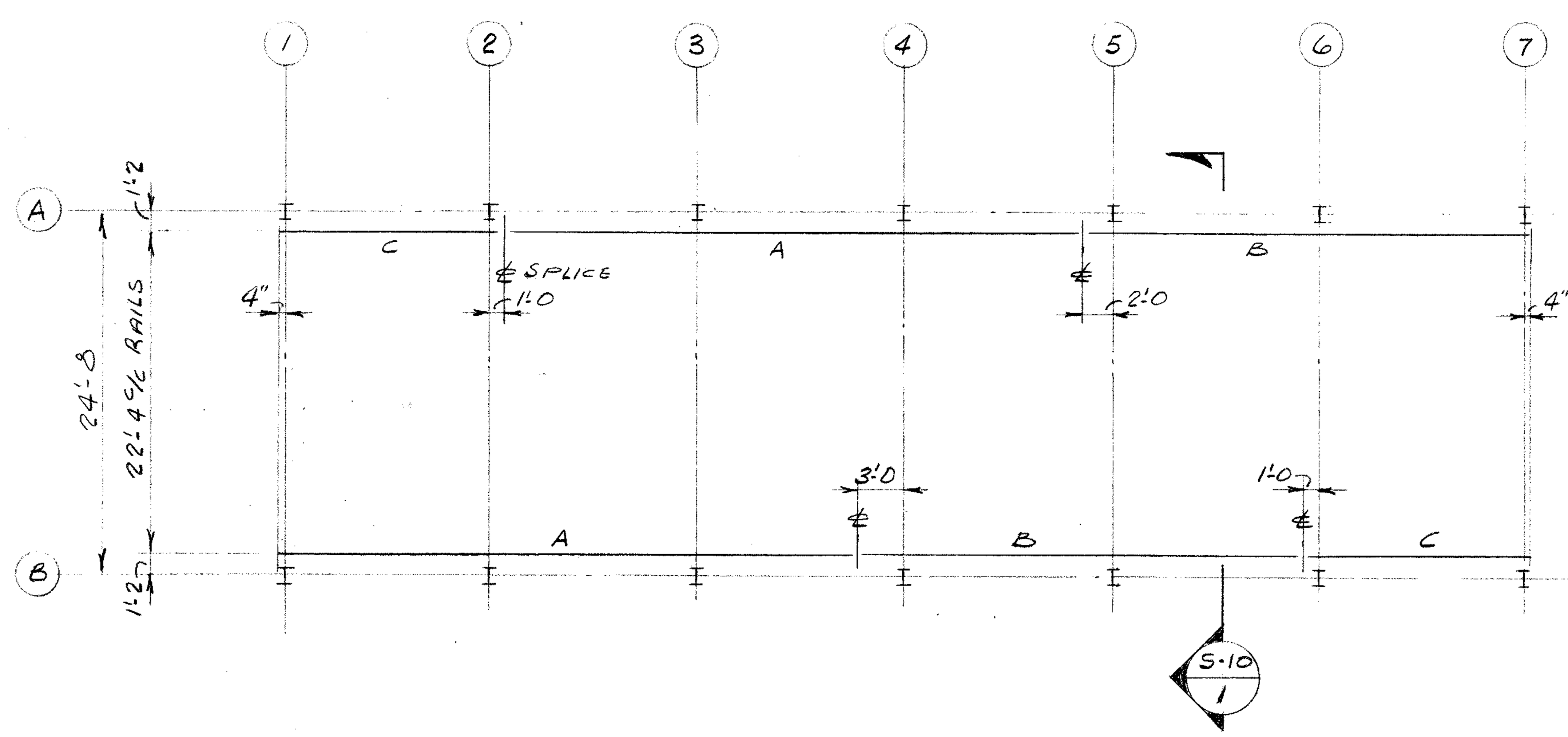

CRANE RAIL PLAN

SCALE: 1/8"=1'-0
RAIL TYPE: A.S.C.E 60#
TOP OF RAIL EL. 926.88' (+18'-10½)
RAIL LENGTHS: A - 39'-0
B - 30'-0
C - 15'-0

RAIL SPLICE LOCATION AS SHOWN. SPLICE TO BE BOLTED W/ TIGHT JOINTS ACCORDING TO AISE SPEC'S.
PROVIDE APP. CRANE STOP AT EACH END RAIL RUN

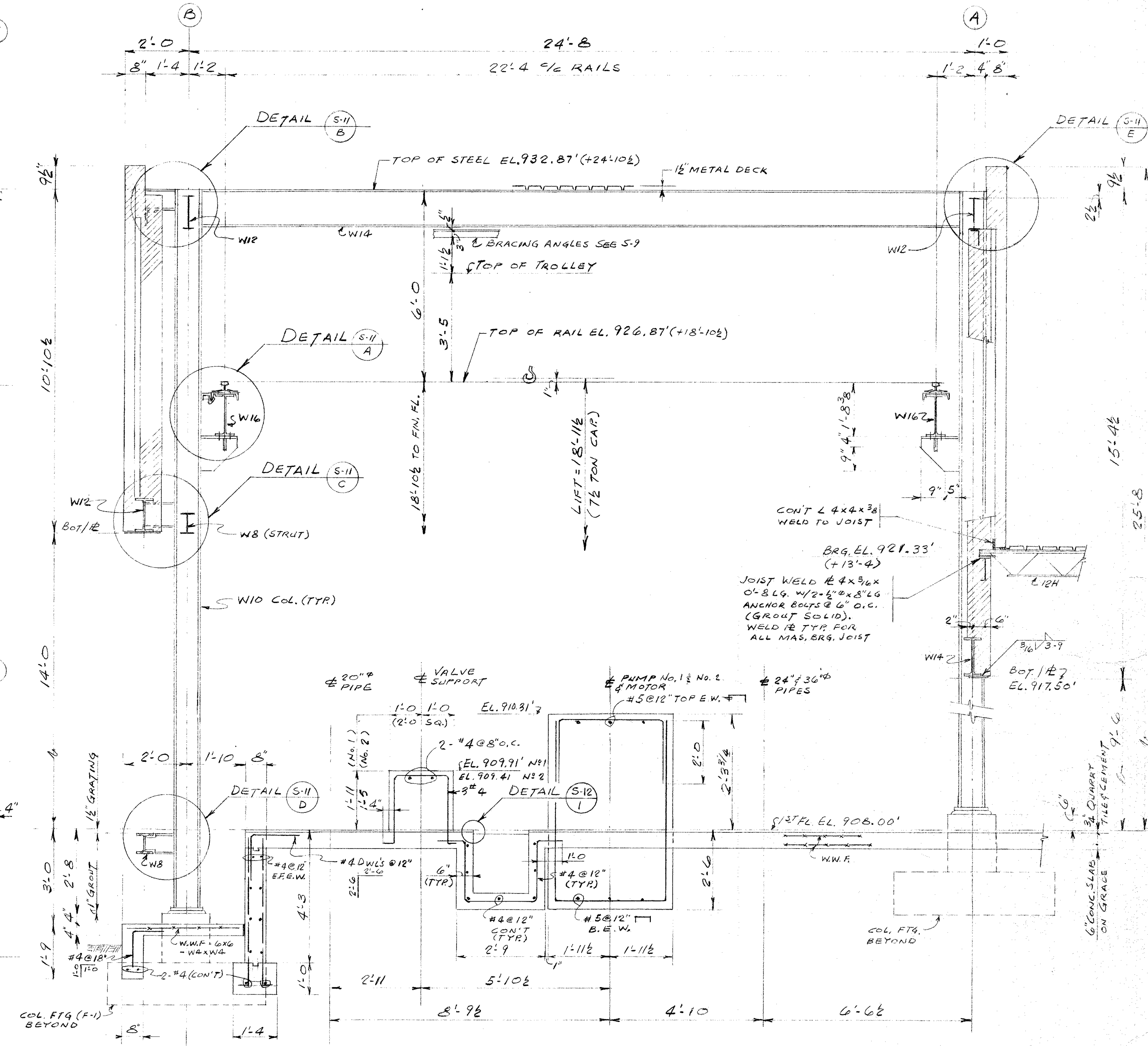

CONTRACTOR VERIFY ALL DIMENSIONS WITH APPROVED EQUIPMENT SHOP DWGS.

SECTION S-10 / S-7 1

SCALE: ½"=1'-0

S-10

AS BUILT 8/16/82

NO.	DESCRIPTION	BY	FIRM	DATE	BY	DATE
	REVISIONS	SUBMITTAL			BUREAU OF WATER APPROVAL	

CONSULTING ENGINEERS
SUBMITTED BY: JULIAN C. MADISON
REG. ENGR. GA. NO. 10072 DATE 1-29-79
MADISON · MADISON · INTERNATIONAL / FLOOD & ASSOCIATES, INC.

CITY OF ATLANTA
BUREAU OF WATER
T.E. STALLWORTH, JR., DIRECTOR
APPROVED BY:
DATE: 3-15-79

DEPARTMENT OF ENVIRONMENT AND STREETS · RESURGENS · ATLANTA GA. 1847

CITY OF ATLANTA, GEORGIA
DEPARTMENT OF ENVIRONMENT & STREETS BUREAU OF WATER

WATER IMPROVEMENT PROGRAM
EAST SIDE HARTSFIELD INTERNATIONAL AIRPORT
WATER STORAGE AND PUMPING STATION

MADISON · MADISON · INTERNATIONAL / FLOOD & ASSOCIATES, INC.
CONSULTING ENGINEERING
Joint Venture
ATLANTA, GEORGIA

DESIGNED BY: K.K.S. | CHECKED BY: K.K.S. | DATE AUG. 1979
DRAWN BY: R.I.B. | SCALE AS SHOWN

CROSS SECTION AND CRANE RAIL PLAN

PROJ. NO. 7749-02 | SHEET NO. 40 OF 62

AF 7145

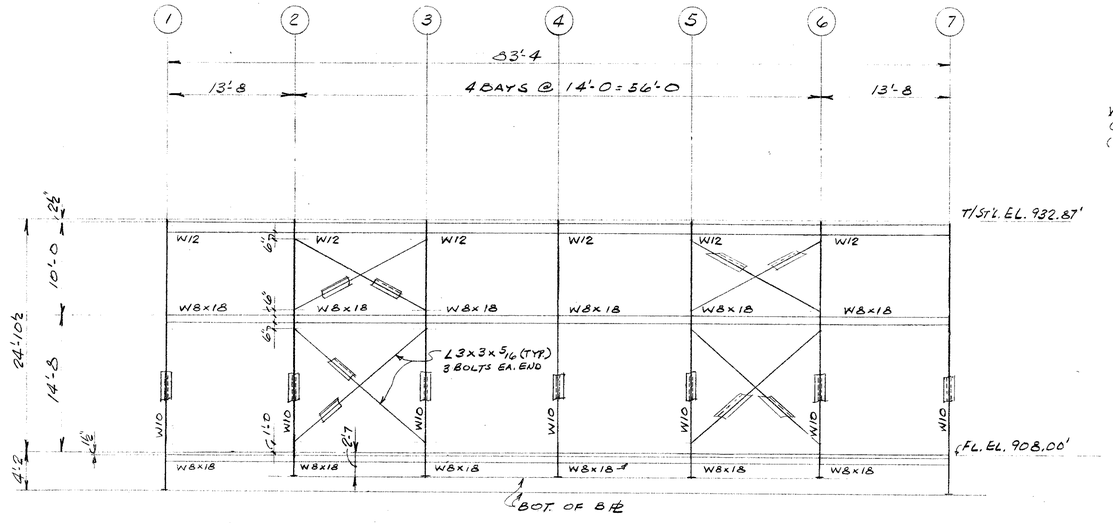

ELEVATION - COLUMN LINE Ⓑ (LOOKING WEST)
SCALE: 1/8"=1'-0

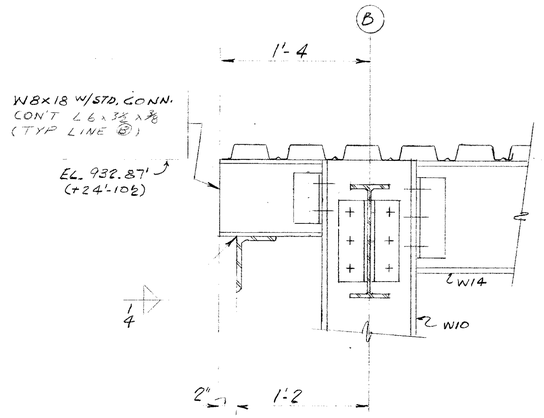

DETAIL S-11 / S-10 B
SCALE: 1½"=1'-0

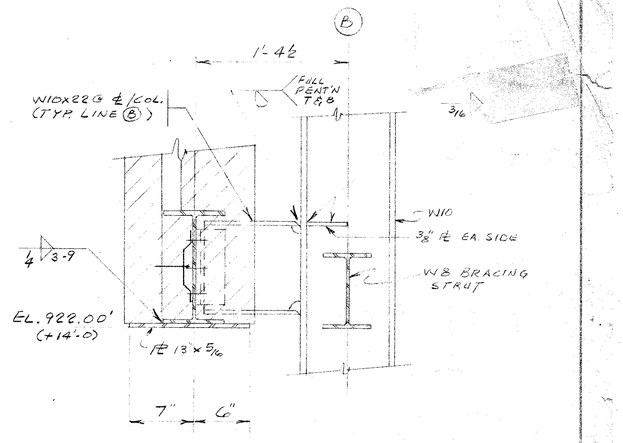

DETAIL S-11 / S-10 C
SCALE: 1½"=1'-0

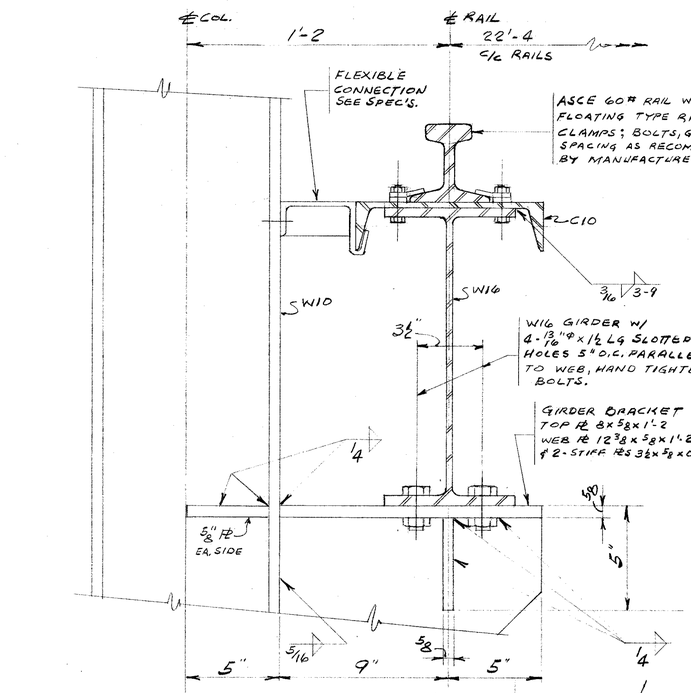

DETAIL S-11 / S-10 A
SCALE: 3"=1'-0

AS BUILT 8/16/82

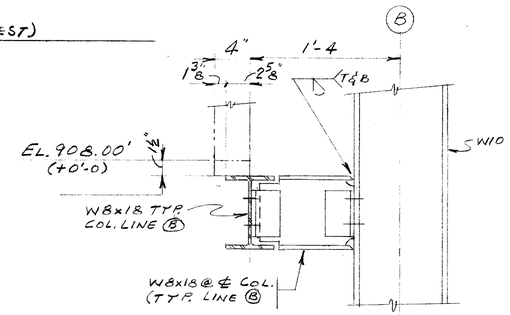

DETAIL S-11 / S-10 D
SCALE: 1½"=1'-0

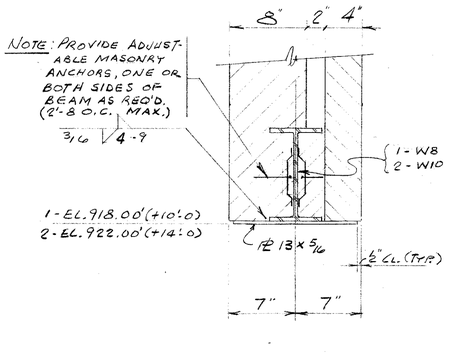

SECTIONS S-11 / S-9 1 & S-11 / S-9 2
SCALE: 1½"=1'-0

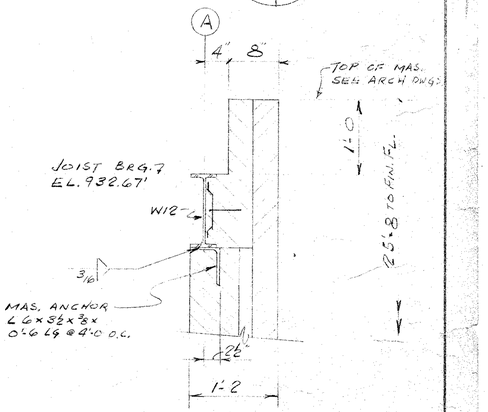

DETAIL S-11 / S-10 E
SCALE: 1"=1'-0

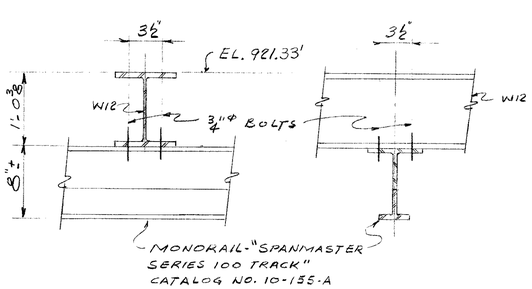

DETAIL S-11 / S-9 F
SCALE: 1½"=1'-0

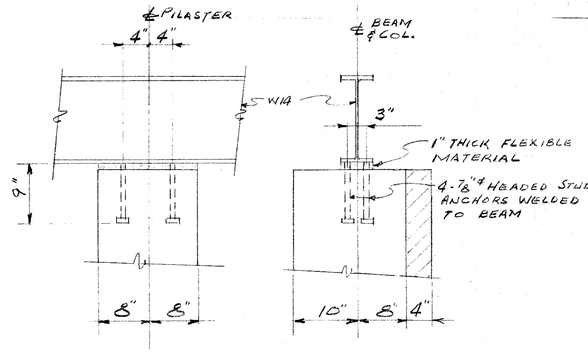

DETAIL S-11 / S-9 G
SCALE: 1"=1'-0

S-11

NO.	DESCRIPTION	BY	FIRM	DATE	BY	DATE
	REVISIONS	SUBMITTAL			BUREAU OF WATER APPROVAL	

CONSULTING ENGINEERS
SUBMITTED BY: JULIAN C. MADISON
REG. ENGR. GA. NO. 10072 DATE 1-29-79
MADISON · MADISON · INTERNATIONAL / FLOOD & ASSOCIATES, INC.

CITY OF ATLANTA
BUREAU OF WATER
T.E. STALLWORTH, JR., DIRECTOR
APPROVED BY: [signature]
DATE: 3-15-79

CITY OF ATLANTA, GEORGIA
DEPARTMENT OF ENVIRONMENT & STREETS BUREAU OF WATER
WATER IMPROVEMENT PROGRAM
EAST SIDE HARTSFIELD INTERNATIONAL AIRPORT
WATER STORAGE AND PUMPING STATION

MADISON · MADISON · INTERNATIONAL / FLOOD & ASSOCIATES, INC.
CONSULTING ENGINEERING
Joint Venture
ATLANTA, GEORGIA

DESIGNED BY: K.K.S. CHECKED BY: K.K.S. DATE: AUG. 1979
DRAWN BY: R.I.B. SCALE: AS SHOWN

ELEVATION, SECTIONS AND DETAILS

PROJ. NO. 7749-02 SHEET NO. 41 OF 62

AF 7145

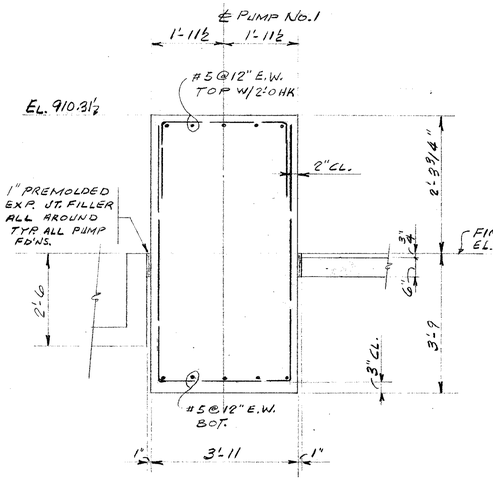

NOTE: REINF. SHOWN TYP. ALL PUMP FDNS. U.N.O.

SECTION S-12 / S-7 / 1

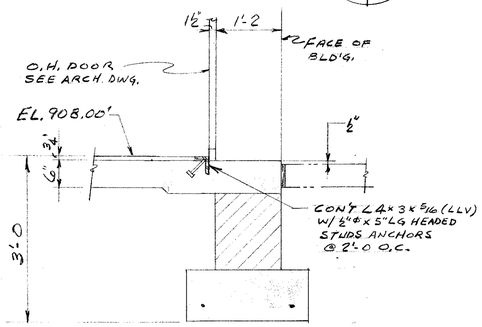

SECTION S-12 / S-7 / 4
SCALE: ¾"=1'-0

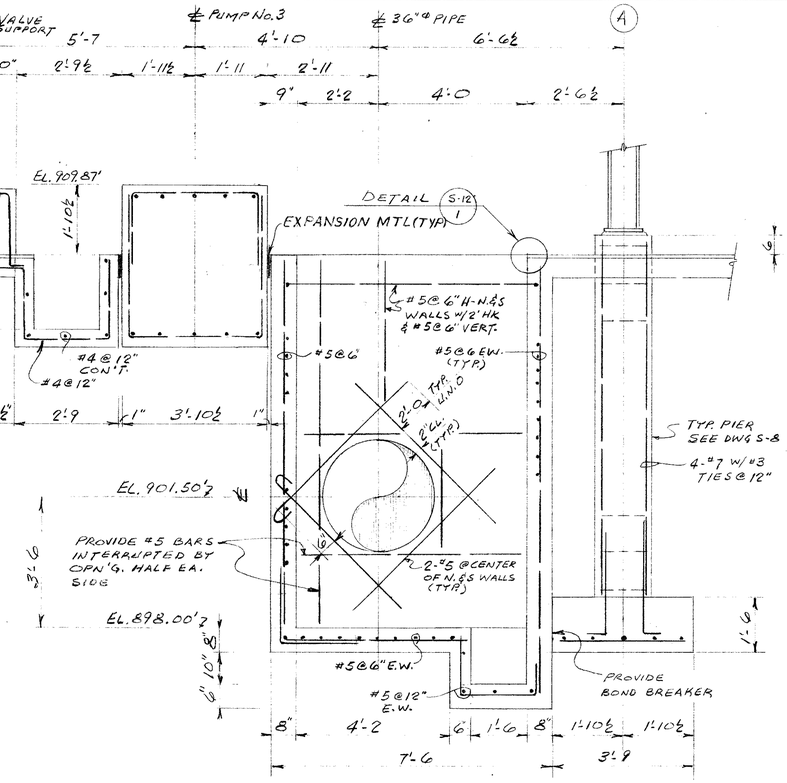

SECTION S-12 / S-7 / 2

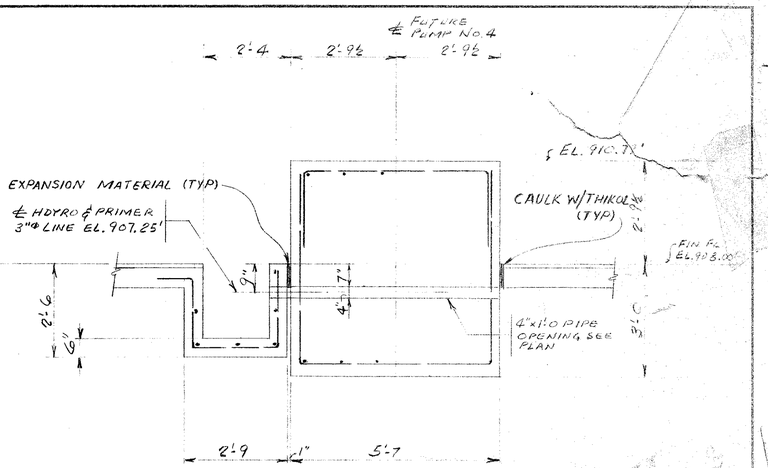

SECTION S-12 / S-7 / 3

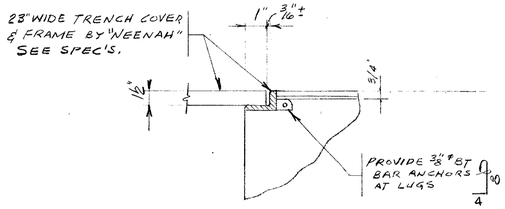

DETAIL S-12 / S-10 / 1
SCALE: 3"=1'-0
(TYP. TRENCH CURB DETAILS)

AS BUILT 8|16|82

NO.	DESCRIPTION	BY	FIRM	DATE	BY	DATE
	REVISIONS	SUBMITTAL			BUREAU OF WATER APPROVAL	

CONSULTING ENGINEERS
SUBMITTED BY: JULIAN C. MADISON
REG. ENGR. GA. NO. 10072 DATE 1-29-79
MADISON · MADISON · INTERNATIONAL / FLOOD & ASSOCIATES, INC.

CITY OF ATLANTA
BUREAU OF WATER
T.E. STALLWORTH, JR., DIRECTOR
APPROVED BY:
DATE: 3-15-79

CITY OF ATLANTA, GEORGIA
DEPARTMENT OF ENVIRONMENT & STREETS BUREAU OF WATER
WATER IMPROVEMENT PROGRAM
EAST SIDE HARTSFIELD INTERNATIONAL AIRPORT
WATER STORAGE AND PUMPING STATION

MADISON · MADISON · INTERNATIONAL / FLOOD & ASSO
CONSULTING ENGINEERING
Joint Venture
ATLANTA, GEORGIA

DESIGNED BY: K.K.S. CHECKED BY: K.K.S. DATE
DRAWN BY: R.I.B. SCALE 1/

PUMP FOUNDATIONS, SECTIONS AND DETAILS

NO. 7749-02 SHEET NO. 42 OF 62

S-12

AF 7145

LEGEND FOR SHEET E-1

(FT)	FLOW TRANSMITTER
(LT)	LEVEL TRANSMITTER
□A	HANDHOLE
(VC)	VALVE CONTROLLER
(CE)	CHLORINE SENSOR (FUTURE)
(PT)	PRESSURE TRANSMITTER
-EW-	EXISTING WATER LINE
-PW-	PROPOSED WATER LINE
———	UNDERGROUND CONDUIT

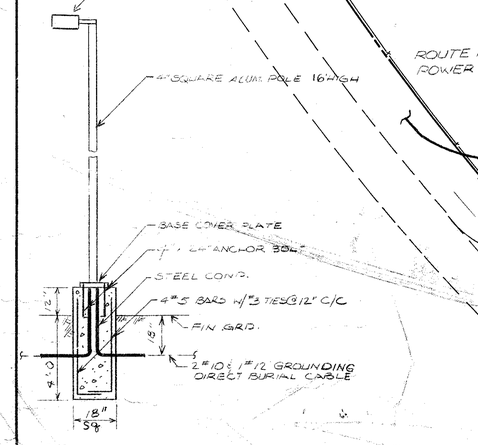

TYP. ROADWAY LIGHTING FIXT. DETAIL
NTS

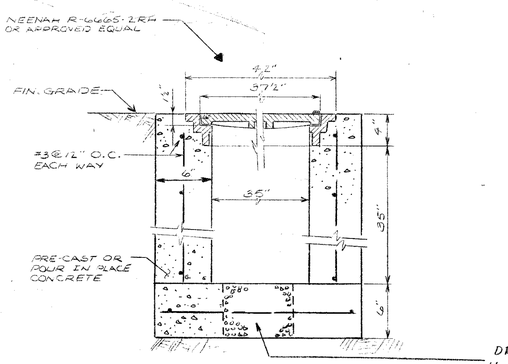

TYPICAL HANDHOLE DETAIL
NTS

ROUTE FOR 20 KV UNDERGROUND POWER CABLE BY GEORGIA POWER

LOCATION FOR PROPOSED 1500 KVA 25 KV BY 4.16 KV SY UTILITY TRANSFORMER PAD MOUNTED

LOCATION FOR PROPOSED 1500 KVA 20 KV BY 4.16 KV SY UTILITY TRANSFORMER PAD MOUNTED

PROPERTY LINE (—— -- ——) IS LIMIT OF WORK FOR THIS CONTRACT.

METERING CABINETS SERVICE ENTRANCE CABLE 4.16 KV BY THE CONTRACTOR

ROUTE FOR 25 KV UNDERGROUND POWER CABLE BY GEORGIA POWER

3/4" PVC CONDUIT STUBBED OUT BEYOND CURB FOR ECT LP2 - 33, 35

TELEPHONE CONDUIT

NEW PUMPING STATION

10 M.G. WATER STORAGE TANK

AIRPORT LOOP ROAD

SPICE

APPROXIMATE LOCATION OF EXISTING 20 KV POWER POLE

NORTH

NOTE:

1. REFER CONDUIT SCHEDULE SHT. #E-9, E-10
2. THE CONTRACTOR SHALL TAKE EXTREME CARE SO AS NOT TO DISTURB THE EXISTING WATER, GAS & ELECTRIC LINES WHILE TRENCHING.
3. THE CONTRACTOR SHALL FURNISH & INSTALL 1" CONDUIT IN UNDERGROUND FROM EACH METERING CABINET TO THE METERS AS DIRECTED BY GEORGIA POWER COMPANY
4. REFER SHEET #E-4 FOR LIGHT FIXTURE SCHEDULE.
5. **INSTRUMENT LOCATIONS AND CONDUIT DRAWINGS ARE DIAGRAMMATIC AND THE CONTRACTOR SHALL VERIFY THE EXACT LOCATION IN THE FIELD BEFORE TRENCHING.**

AS BUILT 8/16/82

NO.	DESCRIPTION	BY	FIRM	DATE	BY	DATE
	REVISIONS	SUBMITTAL			BUREAU OF WATER APPROVAL	
1	PRE-BID REVISIONS		MMI	7/79		

CONSULTING ENGINEERS
SUBMITTED BY: JULIAN C. MADISON
REG. ENGR. GA. NO. 10072 DATE FEB. 1979
MADISON · MADISON · INTERNATIONAL / FLOOD & ASSOCIATES, INC.

CITY OF ATLANTA
BUREAU OF WATER
T.E. STALLWORTH, JR., DIRECTOR
APPROVED BY: [signature] DATE: 3-15-79

CITY OF ATLANTA, GEORGIA
DEPARTMENT OF ENVIRONMENT & STREETS BUREAU OF WATER
WATER IMPROVEMENT PROGRAM
EAST SIDE HARTSFIELD INTERNATIONAL AIRPORT
WATER STORAGE AND PUMPING STATION

MADISON · MADISON · INTERNATIONAL / FLOOD & ASSOCIATES, INC.
CONSULTING ENGINEERING
Joint Venture
ATLANTA, GEORGIA

DESIGNED BY: D.P.A. CHECKED BY: C.P.S. DATE: AUG. 1979
DRAWN BY: P.G SCALE: 1" = 40'

ELECTRICAL SITE PLAN

PROJ. NO. 7749-02 SHEET NO. E-1

AF 7145

GENERAL ABBREVIATIONS

AMPA	—	AMPERE
BKR	—	BREAKER
C/B	—	CIRCUIT BREAKER
CKT	—	CIRCUIT
DN	—	DOWN
FDR	—	FEEDER
FIXT	—	FIXTURE
FLOUR	—	FLOURESCENT
FSBL	—	FUSIBLE
GRD	—	GROUND
HP	—	HORSE POWER
KW	—	KILOWATTS
LTG	—	LIGHTING
DWG	—	DRAWING
MTD	—	MOUNTED
MOT	—	MOTOR
NEC	—	NATIONAL ELECTRICAL CODE
Nº	—	NUMBER
PH	—	PHASE
PNL	—	PANEL
PWR	—	POWER
RECP	—	RECEPTACLE
SP	—	SPARE
SW	—	SWITCH
SWGR	—	SWITCHGEAR
TB	—	TERMINAL BOARD
TEL	—	TELEPHONE
V	—	VOLTS
W	—	WATTS
NEMA	—	NATIONAL ELECTRICAL MANUFACTURER ASSOCIATION
NTS	—	NOT TO SCALE
AFF	—	ABOVE FINISHED FLOOR
EWC	—	ELECTRICAL WATER COOLER

CONDUIT AND WIRE SYMBOLS

- CONDUIT RUN EXPOSED
- CONDUIT RUN UNDERGROUND OR UNDER FLR. SLAB
- CONDUIT TURNING DOWN
- CONDUIT TURNING UP OR TOWARD
- CHANGE IN CONDUIT ELEVATION USING ELBOWS OR BENDS
- CONDUITS RUN CONTINUOUS BETWEEN LOCATIONS AS SHOWN
- HOME RUN TO PANEL FOR LIGHTING AND RECEPTACLE BRANCH CIRCUITS. HATCH MARKS INDICATE NUMBER OF WIRES UNLESS OTHERWISE NOTED (SWITCH LEG, CIRCUIT WIRING, NEUTRAL)
- —G— GROUND WIRE OR CABLE (EXPOSED)
- — G — GROUND WIRE OR CABLE (EMBEDDED)
- LIQUID TIGHT FLEXIBLE CONDUIT WITH FITTINGS SAME SIZE AS CONDUIT UNLESS OTHERWISE NOTED
- —DBC— DIRECT BURIAL CABLE - SIZE AND TYPE AS INDICATED ON DRAWINGS

GROUNDING SYMBOLS

- COPPER-WELD GROUND ROD ¾" DIA. 10'-0 LONG - (DRIVEN)
- GROUND CONNECTION - FUSIONWELD PROCESS
- GROUND TAP TO COLUMN
- GROUND PIGTAIL FOR EQUIPMENT GROUNDING

AUXILIARY SYMBOLS

- TELEPHONE TERMINAL CABINET
- TELEPHONE OUTLET MTG. HT. 1'-6" AFF. - PROVIDE ¾" CONDUIT WITH PULL WIRE TO TELEPHONE TERM. CAB. (SURFACE, FLUSH)
- F FIRE ALARM STATION - MANUALLY OPERATED MTG. HT. 4'-6"
- FD FIRE ALARM BELL MTG. HT. 10'-0" AFF.
- (M) MICROPHONE MTG. HT. 10'-0" AFF.
- (SD) SMOKE DETECTOR
- (PE) PHOTO ELECTRIC DETECTOR

SYMBOL LEGEND

- WP S1a / S1a — SINGLE POLE SWITCH - NUMERIAL INDICATES BRANCH CIRCUIT, LOWER CASE LETTER INDICATES BRANCH CIRCUIT SUB-DIVISON, GENERAL PURPOSE TYPE UNLESS OTHERWISE NOTED. WP = WEATHERPROOF MOUNTING HEIGHT 4'-6"
- S3 / S3 — THREE-WAY SWITCH
- DUPLEX CONVENIENCE OUTLET 20A, 120V GENERAL PURPOSE TYPE UNLESS OTHERWISE NOTED. WP = WEATHERPROOF
- F — SAFETY SW (F INDICATES FUSIBLE)
- JB — JUNCTION BOX
- COMBINATION MOTOR STARTER - 3Φ - 480 V
- LIGHTING PANEL - 120/208 V - 3 PHASE - 4 WIRE
- WELDING OUTLET WITH ENCLOSED FUSED DISCONNECT SWITCH 60A, 600V, 4 POLE 3 WIRE GROUNDED. CROUSE HINDS WSR 6352 RECEPT & APT 6485 PLUG, MOUNTED 4'-6 UNLESS OTHERWISE NOTED
- OVERHEAD DOOR OPERATOR, PUSHBUTTON STATION UP-DOWN-STOP MTD. @ 4'-6" AFF.
- OVERHEAD DOOR MOTOR COMPLETE W/REVERSING LIMIT SW.

SINGLE LINE DIAGRAM-LEGEND

- 460 V - 400 A DRAW OUT CONTACTOR
- MOLDED CASE THERMAL MAGNETIC CIRCUIT BREAKER TRIP RATING & FRAME SIZE AS INDICATED
- MAGNETIC MOTOR STARTER CIRCUIT BREAKER W/MOTOR CIRCUIT PROTECTOR & TERMINAL OVERLOADS, NUMBER INDICATES STARTER SIZE
- SURGE PACK
- POTENTIAL TRANSFORMER
- CTS — CURRENT TRANSFORMER, Nº INDICATES QUANTITY
- CPT — CONTROL POWER TRANSFORMER
- GCT — GROUND CURRENT TRANSFORMER
- POWER TRANSFORMER
- DELTA
- Y — WYE
- LIGHT DASHED LINE INDICATES INTERLOCK WIRING
- CROSS OVER (NO CONNECTION)
- CONNECTION
- (3) — MOTOR HORSEPOWER INDICATOR
- AS — AMMETER SWITCH
- (A) — AMMETER
- (V) — VOLTMETER
- VS — VOLTMETER SWITCH
- (WHDM) — WATTHOUR DEMAND METER
- (PF) — POWERFACTOR METER
- (32) — DIRECTIONAL POWER RELAY
- (50) — INSTANTANEOUS OVERCURRENT OR RATE OF RISE RELAY
- (49) — THERMAL RELAY
- (51) — AC TIME OVERCURRENT RELAY
- (51N) — RESIDUALLY CONNECTED TIME OVERCURRENT RELAY
- (50GS) — GROUND SENSOR INSTANTANEOUS OVERCURRENT RELAY
- (60) — VOLTAGE OR CURRENT BALANCE RELAY
- NON-FUSED DISCONNECT SW.

CONTROL DIAGRAM SYMBOLS

- (M) OR (R) — OPERATING COIL OR RELAY COIL
- NORMALLY OPEN CONTACT
- NORMALLY CLOSED CONTACT
- NORMALLY OPEN PUSHBUTTON STATION
- NORMALLY CLOSED PUSHBUTTON STATION
- STOP / START — MAINTAINED CONTACT PUSHBUTTON STATION
- HAND-OFF-AUTO SELECTOR SWITCH
- LIMIT SWITCH - N.C.
- LIMIT SWITCH - N.O.
- PRESSURE SWITCH
- LVS — LEVEL SWITCH
- FLS — FLOW SWITCH
- TEMPERATURE SWITCH
- THERMOSTAT
- SOLENOID VALVE
- FUSE
- X1 X2 X3 X4 — SECONDARY OF CONTROL TRANSFORMER 120 V - 1Φ, OR AS NOTED
- OL — OVERLOAD CONTACT
- GROUND CONNECTION
- (R) — INDICATING LIGHT - W = WHITE A = AMBER R = RED B = BLUE G = GREEN Y = YELLOW
- RTD — RESISTANCE TEMPERATURE DETECTOR
- TDAE — TIME DELAY AFTER ENERGISING
- TDAD — TIME DELAY AFTER DENERGISING
- OL — OVERLOAD
- OT — OVER TEMPERATURE
- GF — GROUND FAULT
- RTU — REMOTE TERMINAL UNIT

AS BUILT 8/16/82

NO.	DESCRIPTION	BY	FIRM	DATE	BY	DATE
	REVISIONS	SUBMITTAL			BUREAU OF WATER APPROVAL	

CONSULTING ENGINEERS
SUBMITTED BY: JULIAN G. MADISON
REG. ENGR. GA. NO. 10072 DATE FEB. 1979
MADISON · MADISON · INTERNATIONAL / FLOOD & ASSOCIATES, INC.

CITY OF ATLANTA
BUREAU OF WATER
T. E. STALLWORTH, JR., DIRECTOR
APPROVED BY: [signature]
DATE: 3-15-79

CITY OF ATLANTA, GEORGIA
DEPARTMENT OF ENVIRONMENT & STREETS BUREAU OF WATER
WATER IMPROVEMENT PROGRAM
EAST SIDE HARTSFIELD INTERNATIONAL AIRPORT
WATER STORAGE AND PUMPING STATION

MADISON · MADISON · INTERNATIONAL / FLOOD & ASSOCIATES, INC.
CONSULTING ENGINEERING
Joint Venture
ATLANTA, GEORGIA

DESIGNED BY: D.P.A. | CHECKED BY: C.P.S. | DATE: AUG. 1979
DRAWN BY: P.G. | SCALE: N.T.S.

ELECTRICAL SYMBOL LEGEND

PROJ. NO. 7749-02 | SHEET NO. 44 OF 62

E-2

AF 7145

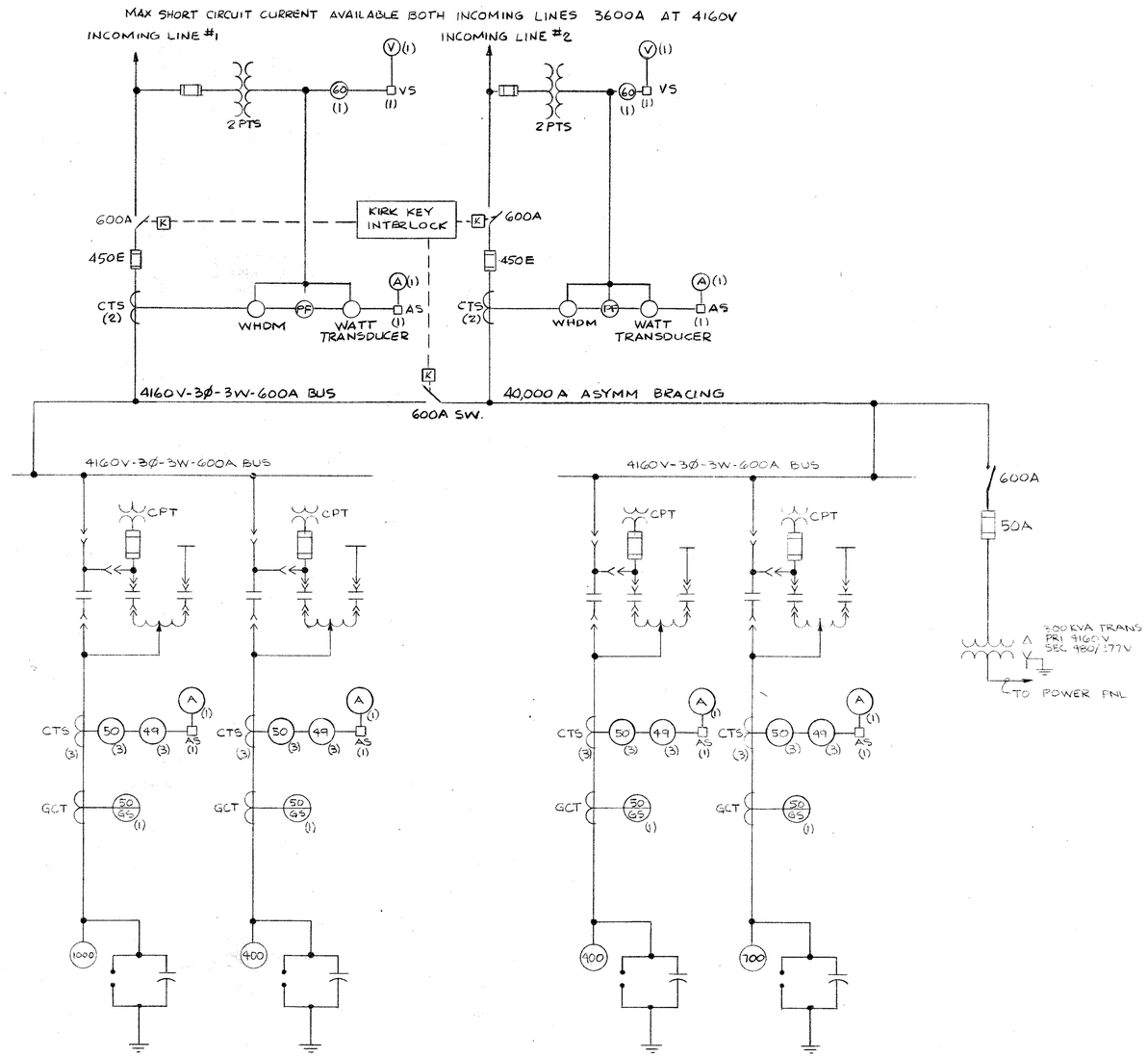

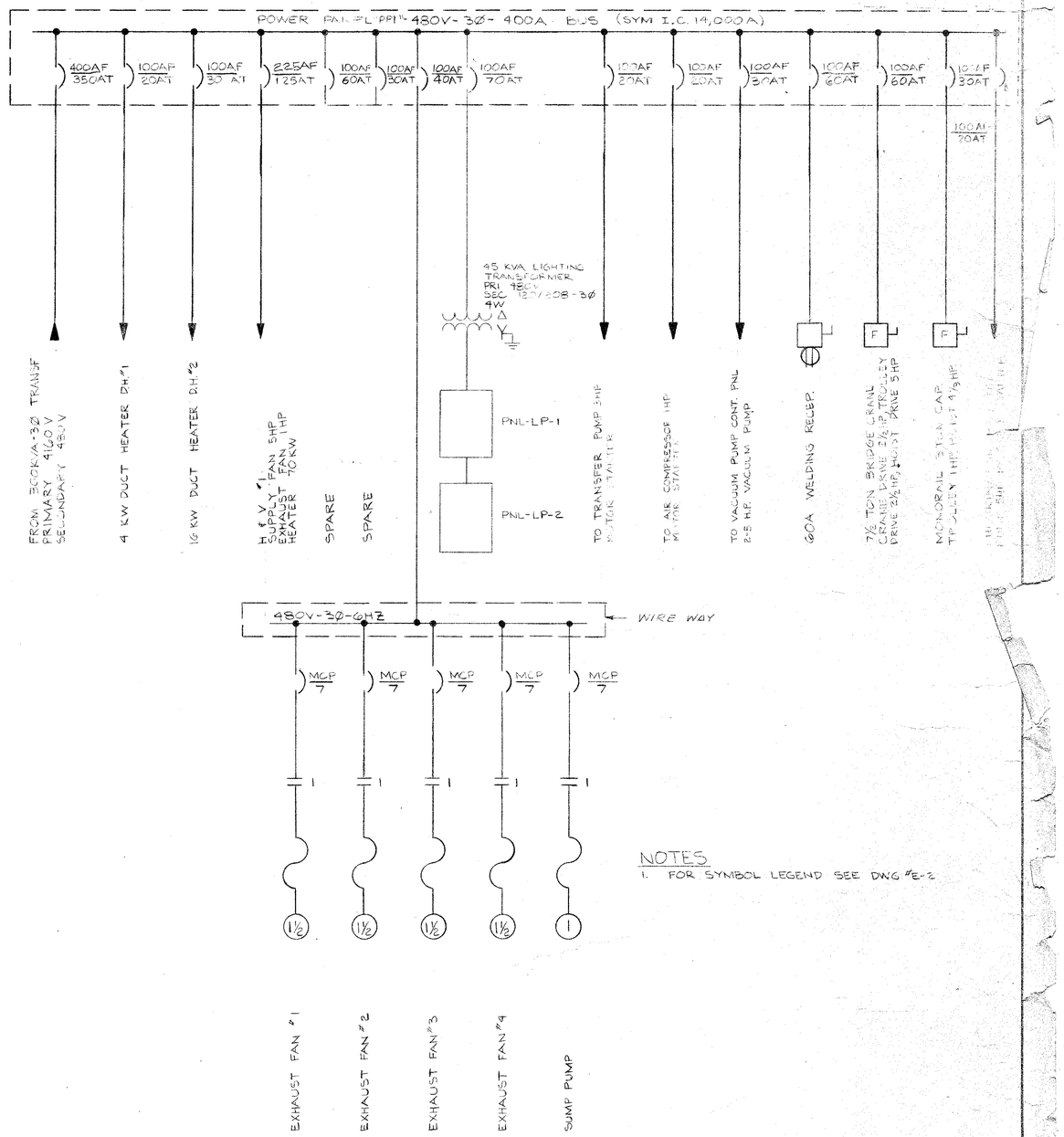

NOTES
1. FOR SYMBOL LEGEND SEE DWG #E-2

AS BUILT 8/16/82

E-3

NO.	DESCRIPTION	BY	FIRM	DATE	BY	DATE
	REVISIONS	SUBMITTAL			BUREAU OF WATER APPROVAL	

CONSULTING ENGINEERS
SUBMITTED BY: JULIAN C. MADISON
REG. ENGR. GA. NO. 10072 DATE FEB. 1979
MADISON · MADISON · INTERNATIONAL / FLOOD & ASSOCIATES, INC.

CITY OF ATLANTA
BUREAU OF WATER
T. E. STALLWORTH, JR., DIRECTOR
APPROVED BY: [signature]
DATE: 3-19-79

CITY OF ATLANTA, GEORGIA
DEPARTMENT OF ENVIRONMENT & STREETS BUREAU OF WATER
WATER IMPROVEMENT PROGRAM
EAST SIDE HARTSFIELD INTERNATIONAL AIRPORT
WATER STORAGE AND PUMPING STATION

MADISON · MADISON · INTERNATIONAL / FLOOD & ASSOCIATES, INC.
CONSULTING ENGINEERING
Joint Venture
ATLANTA, GEORGIA

DESIGNED BY: D.P.A. CHECKED BY C.P.S. DATE AUG. 1979
DRAWN BY P.G. SCALE N.T.S.

ELECTRICAL SINGLE LINE DIAGRAM

PROJ. NO. 7749-02 SHEET NO. 45 OF 62

AF 7145

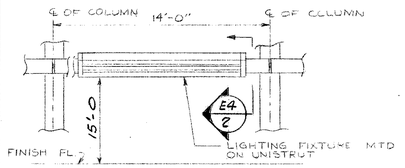

SECTION E4 / E4 1
SCALE: NONE

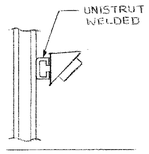

SECTION E4 / E4 2
SCALE: NONE

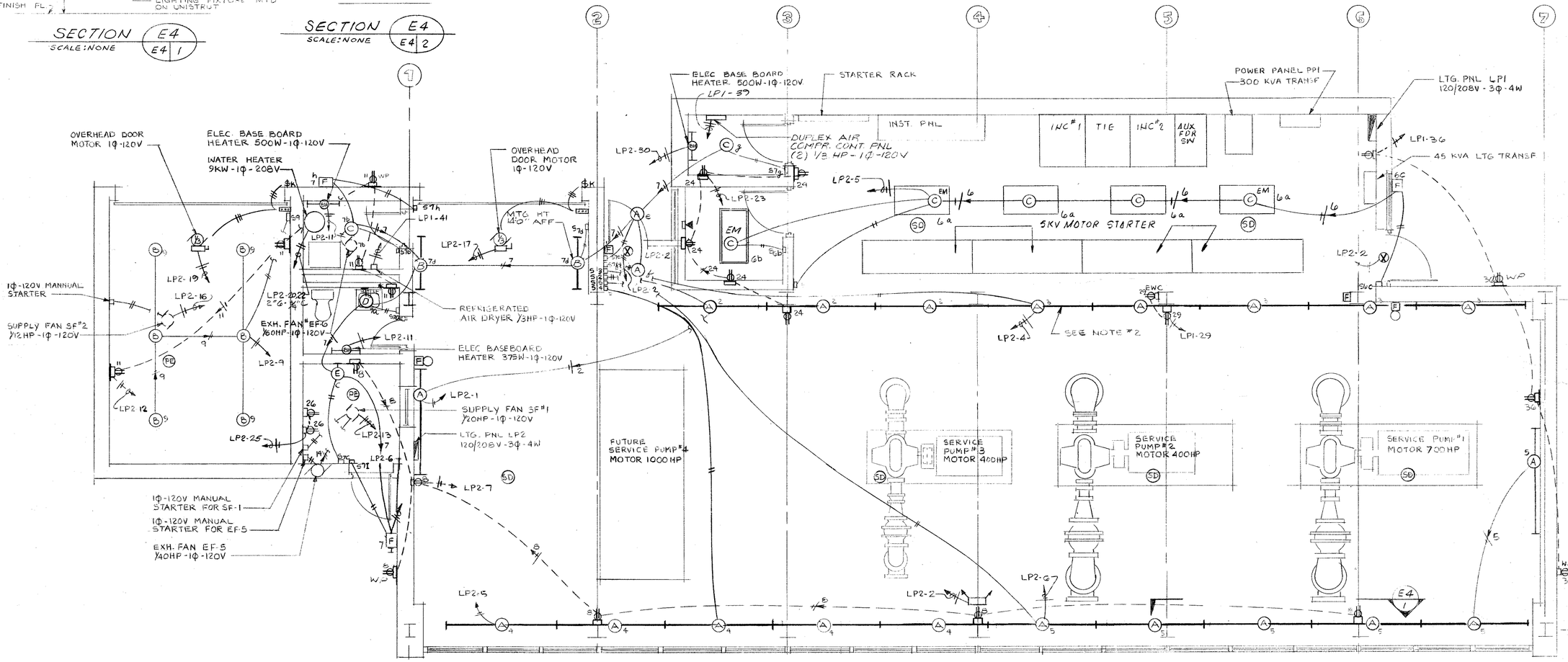

LIGHTING FIXTURE SCHEDULE

(M)	1-250 WATT HIGH PRESSURE SODIUM LIGHTING FIXTURE ON 16'-0" ALUMINUM POLE COMPLETE W/MTG. BRACKET, ANCHOR BOLTS, PHOTOELECTRIC CELL ETC. JET PHILLIPS CAT # MAT 111-250-HP-280 V/PE. POLE CAT JET PHILLIPS CAT # SAP-188-16/BPC-454 DARK BRONZE
(A)	2-110 WATT FLOURESCENT JET-PHILLIPS CAT # 8-CVO-2-8-120V MTG. HT. 15'0 AFF.
(B)	2-40 " " WALL MTD KEENE CAT # C-240-120V
(C)	4-40 " " SURFACE MTD " CAT # NRT 52GVA440-120
(C)EM	4-40 " " " " " " " WITH SELF CONTAINED EMERGENCY LIGHTING FLOURESCENT PACK DUAL LITE CAT # UFO-1-120V
(A)	1-150 WATT RECESSED INCANDESCENT LTG. FIXT. MARCO CAT. # D 21404
(B)	1-200 " " (VAPOR TIGHT) SURFACE MTD W/GLOBE AND DOME REFLECTOR CROUSE-HINDS CAT # VXHF22 GRD
(C)	1-200 WATT INCANDESCENT PORCELAIN LAMPHOLDER GE CAT. # 5740-7
(D)	2-60 WATT INCANDESCENT WALL MTD MARCO CAT # B-3
(E)	1-200 " " " " CROUSE-HINDS CAT # VXHB12G
(F)	1-100 WATT MERCURY VAPOR WALL MTD W/INTEGRAL BALLAST, DEVINE CAT. # B 3161 G8
⊗	EXIT LIGHT DUAL LITE CAT # SRWW
	EMERGENCY LIGHTS DUAL LITE CAT # ML-2

NORTH

NOTES:

1. FOR ELECTRICAL LEGEND SEE DWG # E-2
2. MOUNT THIS ROW OF FLOURESCENT FIXTURES ON THE WALL 15'-0" AFF
3. FOR PANEL SCHEDULE SEE DWG # E-3
4. REFER MECHANICAL DWGS FOR INTERLOCKING SF-1,2 & EF-5
5. IN CHLORINATION ROOM AND CHLORINE STORAGE ROOM USE CORROSIVE RESISTANT WIRING DEVICES.

E-4

AS BUILT 8/16/82

NO.	DESCRIPTION	BY	FIRM	DATE	BY	DATE
	REVISIONS	SUBMITTAL			BUREAU OF WATER APPROVAL	

CONSULTING ENGINEERS
SUBMITTED BY: JULIAN C. MADISON
REG. ENGR. GA. NO. 10072 DATE 1-29-79
MADISON · MADISON · INTERNATIONAL / FLOOD & ASSOCIATES, INC.

CITY OF ATLANTA
BUREAU OF WATER
T. E. STALLWORTH, JR., DIRECTOR
APPROVED BY:
DATE: 3-15-79

CITY OF ATLANTA, GEORGIA
DEPARTMENT OF ENVIRONMENT & STREETS BUREAU OF WATER
WATER IMPROVEMENT PROGRAM
EAST SIDE HARTSFIELD INTERNATIONAL AIRPORT
WATER STORAGE AND PUMPING STATION

MADISON · MADISON · INTERNATIONAL / FLOOD & ASSOCIATES, INC.
CONSULTING ENGINEERING
Joint Venture
ATLANTA, GEORGIA

DESIGNED BY: D.P.A. CHECKED BY C.P.A. DATE AUG. 1979
DRAWN BY P.G SCALE 1/4"=1'-0"

ELECTRICAL LIGHTING PLAN

PROJ. NO. 7749-02 SHEET NO. 46 OF 62

AF 7145

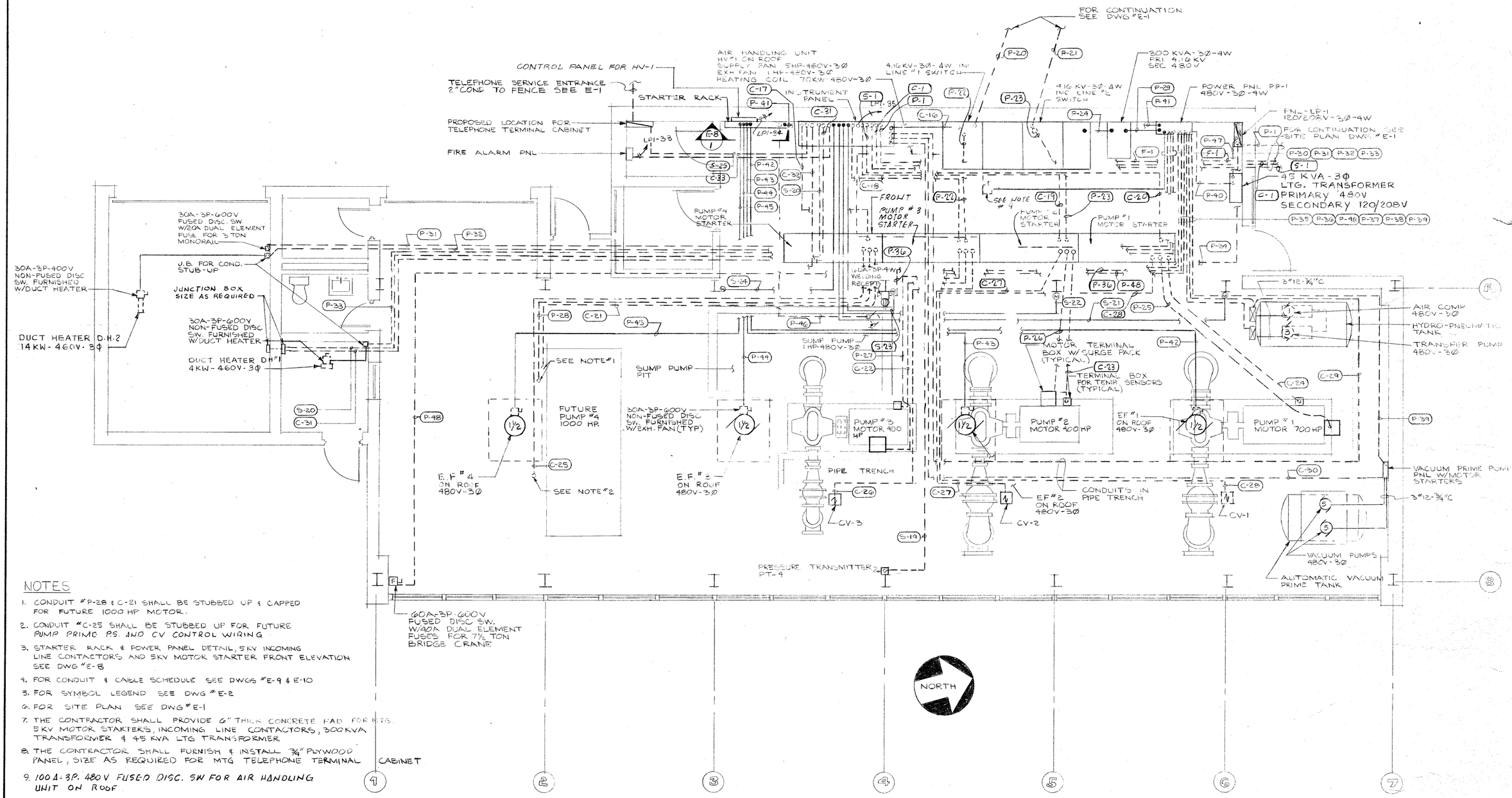

NOTES

1. CONDUIT "P-28 & C-21 SHALL BE STUBBED UP & CAPPED FOR FUTURE 1000 HP MOTOR.
2. CONDUIT "C-25 SHALL BE STUBBED UP FOR FUTURE PUMP PRIME P.S. AND CV CONTROL WIRING
3. STARTER RACK & POWER PANEL DETAIL, 5 KV INCOMING LINE CONTACTORS AND 5KV MOTOR STARTER FRONT ELEVATION SEE DWG "E-8
4. FOR CONDUIT & CABLE SCHEDULE SEE DWGS "E-9 & E-10
5. FOR SYMBOL LEGEND SEE DWG "E-2
6. FOR SITE PLAN SEE DWG "E-1
7. THE CONTRACTOR SHALL PROVIDE 6" THICK CONCRETE PAD FOR MTG 5 KV MOTOR STARTERS, INCOMING LINE CONTACTORS, 300 KVA TRANSFORMER & 45 KVA LTG TRANSFORMER
8. THE CONTRACTOR SHALL FURNISH & INSTALL ¾" PLYWOOD PANEL, SIZE AS REQUIRED FOR MTG TELEPHONE TERMINAL CABINET
9. 100 A-3P. 480 V FUSED DISC. SW FOR AIR HANDLING UNIT ON ROOF

AS BUILT 8/16/82

NO.	DESCRIPTION	BY	FIRM	DATE	BY	DATE
	REVISIONS	SUBMITTAL			BUREAU OF WATER APPROVAL	

CONSULTING ENGINEERS
SUBMITTED BY: JULIAN C. MADISON
REG. ENGR. GA. NO. 10072 DATE 1-29-79
MADISON · MADISON · INTERNATIONAL / FLOOD & ASSOCIATES, INC.

CITY OF ATLANTA
BUREAU OF WATER
T. E. STALLWORTH, JR., DIRECTOR
APPROVED BY:
DATE: 3-15-79

CITY OF ATLANTA, GEORGIA
DEPARTMENT OF ENVIRONMENT & STREETS BUREAU OF WATER
WATER IMPROVEMENT PROGRAM
EAST SIDE HARTSFIELD INTERNATIONAL AIRPORT
WATER STORAGE AND PUMPING STATION

MADISON · MADISON · INTERNATIONAL / FLOOD & ASSOCIATES, INC.
CONSULTING ENGINEERING
Joint Venture
ATLANTA, GEORGIA

DESIGNED BY: D.P.A. CHECKED BY: C.P.S. DATE: AUG. 1979
DRAWN BY: P.G. SCALE: 1/4"=1'-0"

ELECTRICAL POWER PLAN

PROJ. NO. 7749-02 SHEET NO. 47 OF 62

E-5

AF 7145

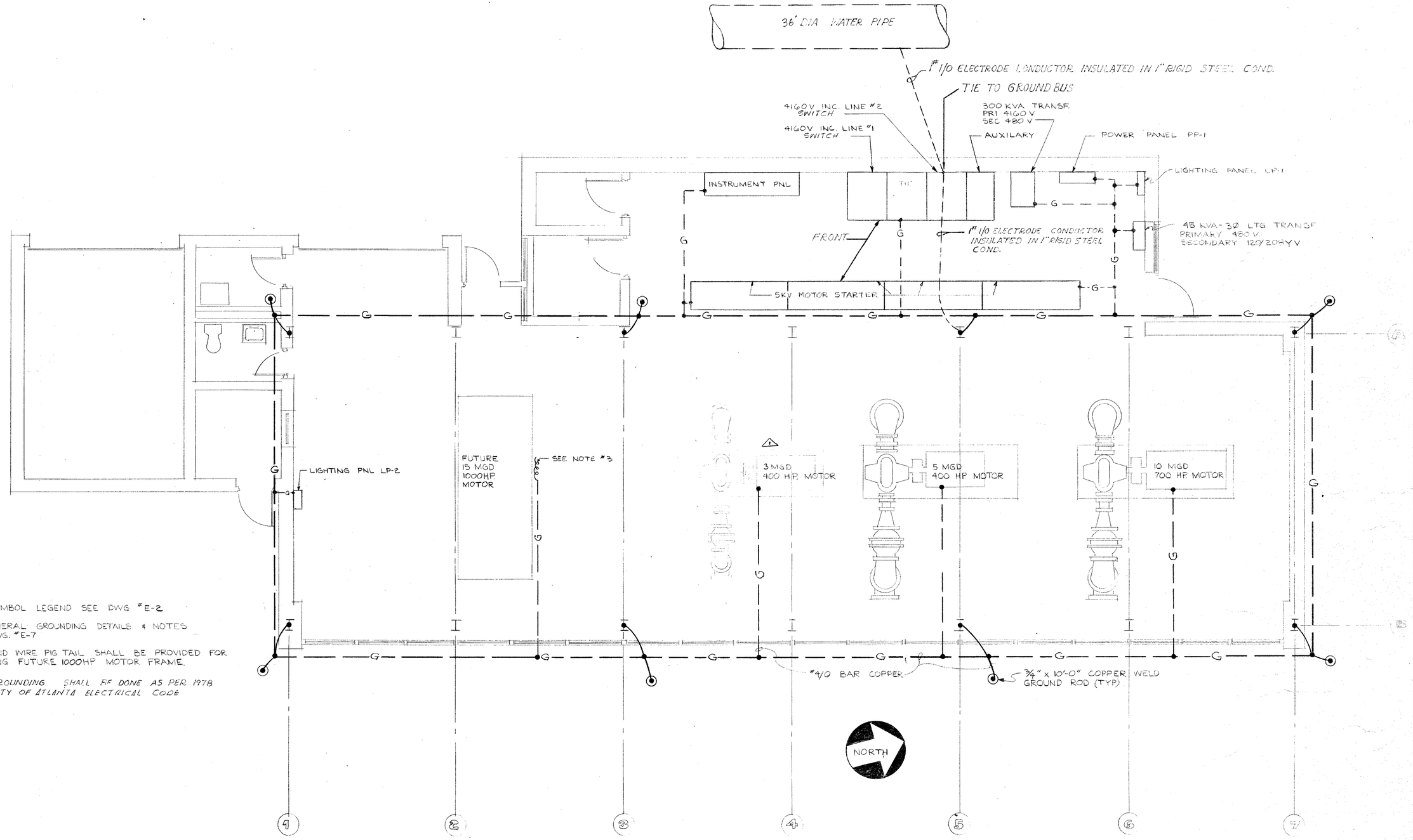

NOTES

1. FOR SYMBOL LEGEND SEE DWG #E-2
2. FOR GENERAL GROUNDING DETAILS & NOTES SEE DWG. #E-7
3. 10' GROUND WIRE PIG TAIL SHALL BE PROVIDED FOR GROUNDING FUTURE 1000HP MOTOR FRAME.
4. ALL GROUNDING SHALL BE DONE AS PER 1978 NEC & CITY OF ATLANTA ELECTRICAL CODE

AS BUILT 8|16|82

NO.	DESCRIPTION	BY	FIRM	DATE	BY	DATE
	REVISIONS	SUBMITTAL			BUREAU OF WATER APPROVAL	
1	PRE-BID REVISIONS	FWS	F&A	7/79		

CONSULTING ENGINEERS
SUBMITTED BY: JULIAN C. MADISON
REG. ENGR. GA. NO. 10072 DATE 1-29-79
MADISON · MADISON · INTERNATIONAL / FLOOD & ASSOCIATES, INC.

CITY OF ATLANTA
BUREAU OF WATER
T.E. STALLWORTH, JR., DIRECTOR
APPROVED BY: [signature]
DATE: 3-15-79

CITY OF ATLANTA, GEORGIA
DEPARTMENT OF ENVIRONMENT & STREETS BUREAU OF WATER
WATER IMPROVEMENT PROGRAM
EAST SIDE HARTSFIELD INTERNATIONAL AIRPORT
WATER STORAGE AND PUMPING STATION

MADISON · MADISON · INTERNATIONAL / FLOOD & ASSOCIATES, INC.
CONSULTING ENGINEERING
Joint Venture
ATLANTA, GEORGIA

DESIGNED BY: D. P. A. | CHECKED BY: C. P. S. | DATE: AUG 1979
DRAWN BY: T. D. | SCALE: NONE

ELECTRICAL GROUNDING PLAN

PROJ. NO. 7749-02 | SHEET NO. 48 OF 62

E-6

A.F. 7145

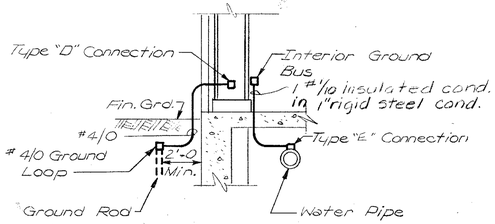

STEEL FRAME STRUCTURES GROUNDING

NTS

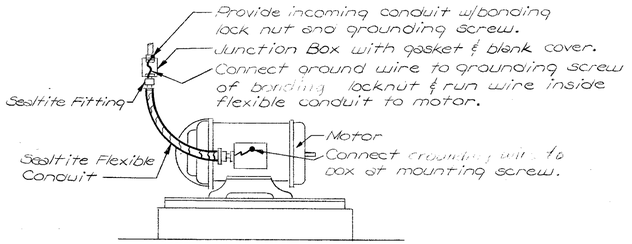

GROUNDING ELECTRIC MOTOR

NTS

TYPE OF CONNECTION	COMPRESSION	WELDED
A CABLE — LUG	BURNDY YA	BURNDY CB-1(2HOLES)
		CADWELD LA
B ROD — CABLE		BURNDY CR-2
		CADWELD GT
C CABLE		BURNDY CC-2
		CADWELD TA
D COLUMN — CABLE		BURNDY CS-4
		CADWELD YV
E PIPE — CABLES	BURNDY GD	
	OZ EG	
F CABLE	BURNDY GB	
	OZ KG	
G		BURNDY CC-4
		CADWELD XA
H CABLE — PIPE	BURNDY GAR	
	OZ ABG	

GROUNDING NOTES

1. THE GROUNDING SYSTEM IS SHOWN DIAGRAMMATICALLY. EXACT LOCATIONS OF CABLE RODS AND CONNECTIONS SHALL BE DETERMINED IN THE FIELD.
2. GROUNDING CABLE SHALL BE 4/0 AWG SOFT DRAWN BARE COPPER WHERE INDICATED.
3. ALL BURIED GROUNDING CABLE CONNECTIONS SHALL BE CADWELD OR THERMOWELD. THE WELDED CONNECTIONS SHALL BE LEFT EXPOSED FOR INSPECTION BY ENGINEER PRIOR TO BACKFILLING.
4. GROUND RODS TO BE DRIVEN IN SUCH NUMBERS THAT THE MAXIUM GROUND NETWORK RESISTANCE WILL NOT EXCEED 5 OHMS BY TEST.
5. TOP OF GROUND RODS AND CABLE TO BE NOT LESS THAN 18" BELOW GROUND GRADE UNLESS OTHERWISE NOTED.
6. WHERE EXPOSED TO MECHANICAL INJURY THE GROUNDING CONDUCTOR SHALL BE SUITABLY PROTECTED BY PIPE OR OTHER MECHANICAL PROTECTION. EACH END OF PROTECTING CONDUIT (IF MAGNETIC) SHOULD BE GROUNDED TO THE BARE CABLE.
7. ALL CABLE LUGS AND CONNECTORS SHALL BE OF THE COMPRESSION TYPE UNLESS OTHERWISE NOTED.
8. STEEL BUILDING COLUMNS SHALL BE CONNECTED TO GROUND LOOP BY MEANS OF 4/0 BARE COPPER CABLE AND CS-4 OR EQUAL FITTING.
9. STEEL MUST BE CLEANED THOROUGHLY AND CABLE MUST BE COMPLETELY DRY BEFORE MAKING WELD CONNECTIONS.
10. THE GROUNDING LOOP SHALL BE CONNECTED TO THE WATER PIPE MAIN, WHERE THIS PIPE SYSTEM QUALIFIES AS THE MAIN GROUNDING ELECTRODE.
11. THERMAL TYPE CONNECTIONS SHALL NOT BE USED AFTER INSTALLATION OF WIRES NOR WITH EQUIPMENT ENCLOSURES.

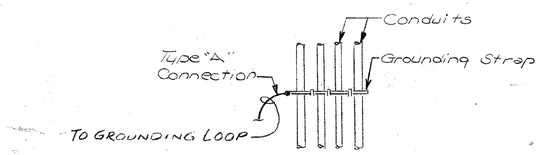

BANKED CONDUITS

NTS

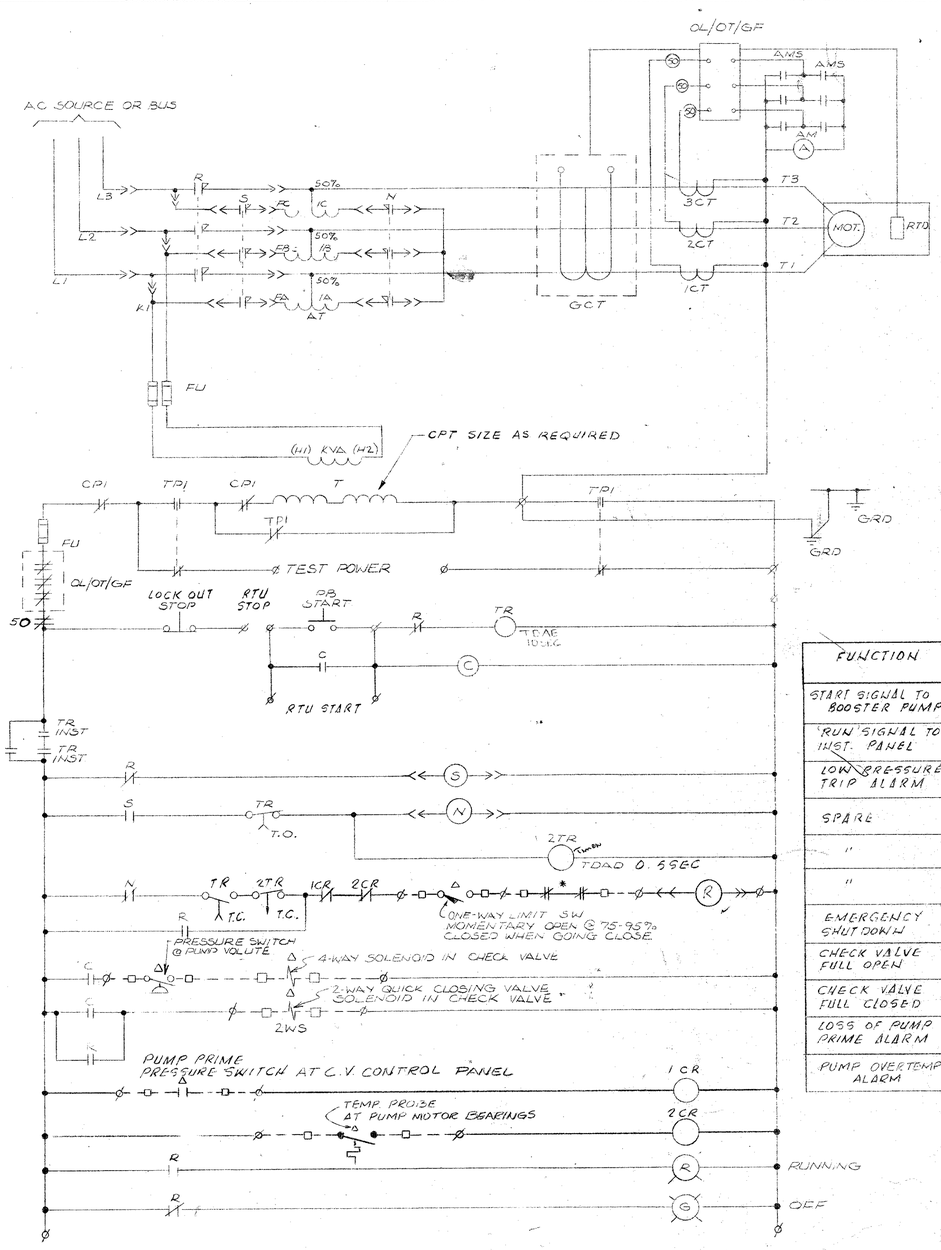

FUNCTION	AUXILARY CONTACTS
START SIGNAL TO BOOSTER PUMP	R
'RUN' SIGNAL TO INST. PANEL	R
LOW PRESSURE TRIP ALARM	R
SPARE	R
"	R
"	R
EMERGENCY SHUT DOWN	OL/OT/GF
CHECK VALVE FULL OPEN	
CHECK VALVE FULL CLOSED	
LOSS OF PUMP PRIME ALARM	1 CR
PUMP OVERTEMP ALARM	2 CR

TYPICAL 5KV MOTOR STARTER CONTROL WIRING DIAGRAM

Φ INDICATES WIRED OUT BY MANUFACTURER INSIDE STARTER PNL FOR REMOTE CONNECTION IN THE FIELD

△ DEVICES LOCATED REMOTE

□ REMOTE TERMINAL

---- FIELD WIRING

* OPEN WHEN LOW CAPACITY OR LOW PRESSURE IN THE SYSTEM. LOCATED AT INSTRUMENTATION PANEL

NOTE: FOR FINAL AS-BUILT CONTROL WIRING DIAGRAM, SEE WESTINGHOUSE DRAWING NO 9887D06,07 & 08

E-7

AS BUILT 8/16/82

NO.	DESCRIPTION	BY	FIRM	DATE	BY	DATE
	REVISIONS		SUBMITTAL		BUREAU OF WATER APPROVAL	

CONSULTING ENGINEERS
SUBMITTED BY: JULIAN C. MADISON
REG. ENGR. GA. NO. 10072 DATE 1-29-79
MADISON-MADISON-INTERNATIONAL / FLOOD & ASSOCIATES, INC.

CITY OF ATLANTA
BUREAU OF WATER
T. E. STALLWORTH, JR., DIRECTOR
APPROVED BY:
DATE: 3-15-79

CITY OF ATLANTA, GEORGIA

DEPARTMENT OF ENVIRONMENT & STREETS BUREAU OF WATER

WATER IMPROVEMENT PROGRAM

EAST SIDE HARTSFIELD INTERNATIONAL AIRPORT WATER STORAGE AND PUMPING STATION

MADISON-MADISON-INTERNATIONAL / FLOOD & ASSOCIATES, INC.
CONSULTING ENGINEERING
Joint Venture
ATLANTA, GEORGIA

DESIGNED BY: D.P.A. CHECKED BY: C.P.S DATE: AUG. 1979
DRAWN BY: P.G. SCALE: NONE

ELECTRICAL GROUNDING DETAILS

PROJ. NO. 7749-02 SHEET NO. 49 OF 62

AF 7145

SYM. I.C. = 10,000A — PNL-LP1 — LOCATION :- PWR DISTRIBUTION CENTER RM
BUS 225A MAIN BKR=150A SERVICE 120/208V-3Φ-4W MTG: SURFACE

DESCRIPTION	WATTS A	WATTS B	WATTS C	BREAKER POLE	BREAKER AMP	CKT NO.	BUS CONN A B C	CKT NO	BREAKER POLE	BREAKER AMP	WATTS A	WATTS B	WATTS C	DESCRIPTION
VALVE CONTROLLER VC-1	249			3	20	1		2	2	30	249			VALVE CONTROLLER VC-6
		249				3		4				249		
			249			5		6	2	30			249	VALVE CONTROLLER VC-7
VALVE CONTROLLER VC-2	249			3	20	7		8			249			
		249				9		10				249		ALT. V-1 VALVE CONTROLLER VC-8
			249			11		12	3	20			249	
VALVE CONTROLLER VC-3	249			3	20	13		14			249			ROV-1
		249				15		16				249		ALT. V-2 VALVE CONTROLLER VC-9
			249			17		18	3	20			249	
VALVE CONTROLLER VC-4	249			3	20	19		20			249			ROV-2
		249				21		*22	1	20		400		(2) RECEP. NEAR RESVR
			249			23		*24	1	20			400	(2) " " "
VALVE CONTROLLER VC-5	249			2	30	25		26			9361			
		249				27		28	3	100		8625		PNL- LP2
EWC & RECEP.			700	1	20	29		30					7604	
LT1 CONDENSATION HTR	200			1	20	31		32	1	20	200			LT-2 CONDENSATION HTR
FIRE ALARM PNL		200		1	20	33		34	1	20		400		CONTROL PNL FOR HV-1
INST. PNL			1000	1	20	35		*36	1	20			800	RECEP. IN PUMP RM
UT" CLOSET	150			1	20	37		38	1	20				SPARE
AIR " COMPRESSOR		500		1	30	39		40	1	20				SPARE
AIR " DRYER			249	1	20	41		42	1	20				SPARE
														SPARE
TOTAL	1445	1945	2945				N				10,557	10,172	9,551	

BUS A = 12,002 W
BUS B = 11,617 W
BUS C = 12,247 W
TOTAL = 36,765 W

NOTES:
1. ASTERISK (*) NEAR CKT NO 22, 24 & 36 ON PNL-LP1 AND CKT NO. 8 & 11 ON PANEL-LP2 INDICATES C/B SHALL HAVE GROUND FAULT CIRCUIT INTERRUPTER.

SYM I.C 10,000 A — LTG. PNL-LP2 — LOCATION: PUMP ROOM
BUS 100A — SERVICE 120/208V-3Φ-4W — MTG SURFACE

DESCRIPTION	WATTS ΦA	WATTS ΦB	WATTS ΦC	BREAKER POLE	BREAKER AMP	CKT NO	BUS CONN A B C	CKT NO	BREAKER POLE	BREAKER AMP	WATTS ΦA	WATTS ΦB	WATTS ΦC	DESCRIPTION
GENERAL LGT	1090			1	20	1		2	1	20	75			EXIT & EMER. LTG
" "		1300				3		4				1300		GENERAL LTG
" "			1120			5		6					1560	"
RECEP.	1440					7		8			1440			" & EF #6
SPARE						9		10				1200		GENERAL LTG
ELEC B-BD HTR			875			11		12					1000	RECEPTACLE OUTSIDE
EF #1 & EF #5	57					13		14						SPARE
SPARE						15		16				76		EF #2
OVERHEAD DOOR			249	1		17		18						SPARE
" "& GARAGE				2	60	19		20			4500			LOADER HTR.
SPARE				2	60	21		22				4500		" "
RECEPTACLES			800	2	20	23		24						SPARE
CHLORINATORS	200			2	20	25		26						"
SPARE				1	20	27		28						"
SPARE				1	20	29		30					500	ELEC. BASEBOARD HTR
SPARE				1	20	31		32						SPARE
OUTSIDE LIGHTING				1	20	33		34				600		DRIVE LTG
" "				1	20	35		36					600	" "
TOTAL							N							

BUS A = 8961 W
BUS B = 8976 W
BUS C = 6704 W
TOTAL = 24,641 W

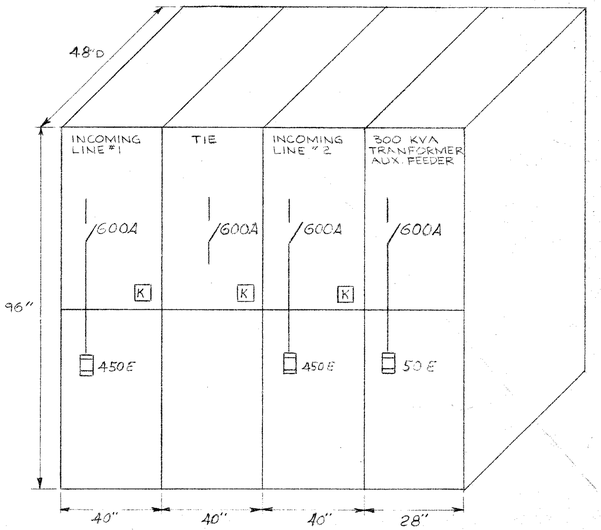

4160V INCOMING LINE & TIE
SCALE : NONE

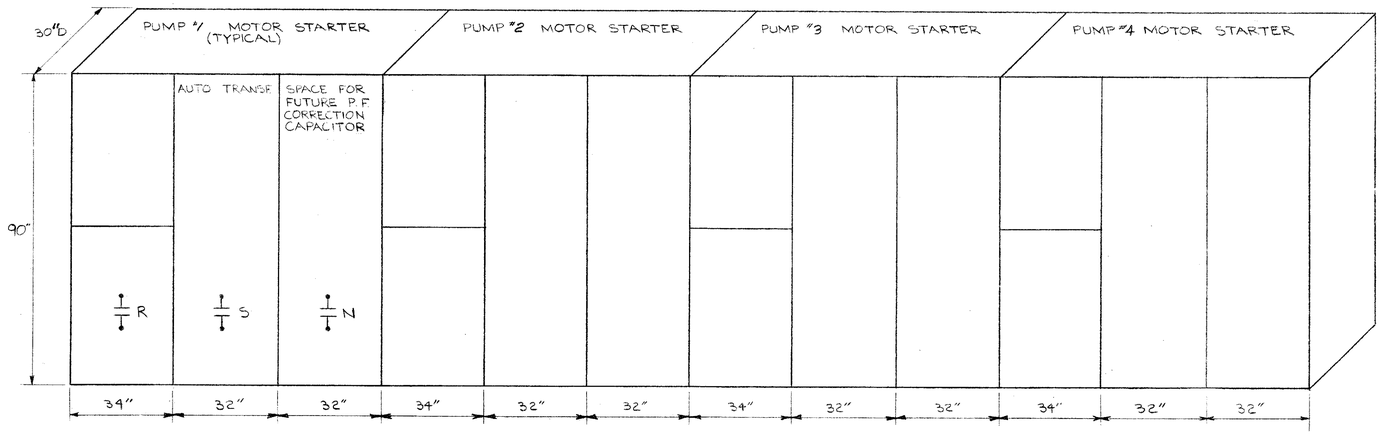

4160 V MOTOR STARTER FRONT ELEVATION
SCALE: NONE

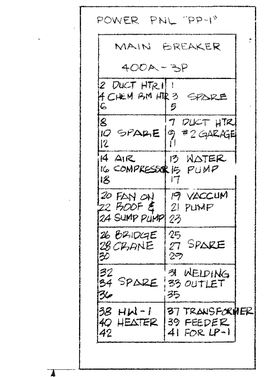

FRONT ELEVATION-POWER PANEL "PP-1"
SCALE : NONE

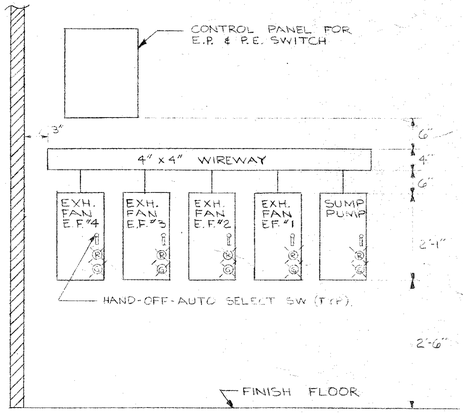

SECTION
SCALE: NONE

E-8
E5 | 1

AS BUILT 8/16/82

NO.	DESCRIPTION	BY	FIRM	DATE	BY	DATE
	REVISIONS		SUBMITTAL		BUREAU OF WATER APPROVAL	

CONSULTING ENGINEERS
SUBMITTED BY: JULIAN C. MADISON
REG. ENGR. GA. NO. 10072 DATE 1-29-79
MADISON · MADISON · INTERNATIONAL / FLOOD & ASSOCIATES, INC.

CITY OF ATLANTA
BUREAU OF WATER
T. E. STALLWORTH, JR, DIRECTOR
APPROVED BY: [signature]
DATE: 3-15-79

CITY OF ATLANTA, GEORGIA
DEPARTMENT OF ENVIRONMENT & STREETS BUREAU OF WATER
WATER IMPROVEMENT PROGRAM
EAST SIDE HARTSFIELD INTERNATIONAL AIRPORT
WATER STORAGE AND PUMPING STATION

MADISON · MADISON · INTERNATIONAL / FLOOD & ASSOCIATES, INC.
CONSULTING ENGINEERING
Joint Venture
ATLANTA, GEORGIA

DESIGNED BY: D.P.A. CHECKED BY: C.P.A. DATE: AUG. 1979
DRAWN BY: P.G. SCALE: NONE

5 KV MOTOR STARTER FRONT ELEVATION & PANEL SCHEDULE

PROJ. NO. 7749-02 SHEET NO. 50 OF 65

E-8

AF 7145

CONDUIT NO.	CONDUIT SIZE	CABLE COND.	CABLE SIZE	CABLE INS	CABLE VOLT	CONDUIT FROM	CONDUIT TO	FOR	REMARKS
P-1	2"	22 10	#12 #10	THWN	600	LIGHTING PANEL - LP-1	HANDHOLE - A	VC-1 TO 9, RECEPTACLES LT-1, 2	POWER WIRING 208V-1Φ & 3Φ, 120V-1Φ
P-2	2"	16 6	#12 #10	"	"	HANDHOLE - A	" B	VC-1,2,6,8,9, LT-1,2, RECEPTACLES	"
P-3	1"	6 4	#12 #10	"	"	" B	" C	VC-1,6,8, RECEPTACLES	208V-3Φ, 120V-1Φ
P-4	1"	6 2	#12 #10	"	"	" B	" D	VC-2,9, RECEPTACLES	"
P-5	1"	4	#10	"	"	" A	" E	VC-5,7	208V-1Φ
P-6	1"	2	#10	"	"	" E	" F	VC-7	"
P-7	3/4"	3	#12	"	"	" A	VC-4	POWER	208V-3Φ
P-8	3/4"	3	#12	"	"	" A	VC-3	"	"
P-9	3/4"	2	#12	"	"	" B	LT-1	SPACE HEATER	120V-1Φ
P-10	3/4"	2	#12	"	"	" B	LT-2	"	"
P-11	3/4"	3	#12	"	"	" C	VC-1	POWER	208V-3Φ
P-12	3/4"	2	#10	"	"	" C	VC-6	"	208V-1Φ
P-13	3/4"	3	#12	"	"	" C	VC-8	"	208V-3Φ
P-14	3/4"	3	#12	"	"	" D	VC-2	"	"
P-15	3/4"	3	#12	"	"	" D	VC-9	"	"
P-16	3/4"	2	#10	"	"	" E	VC-5	"	208V-1Φ
P-17	3/4"	2	#10	"	"	" F	VC-7	"	"
P-18	3/4"	2	#10	"	"	" D	RECEPTACLES	"	120V-1Φ
P-19	3/4"	2	#10	"	"	" C	"	"	"
P-20	5"	3/1	500 MCM 1#3/0N	XLP	5KV	INCOMING LINE #1 SWITCH	METERING CABINET #1	"	4160V-3Φ-4W
P-21	5"	3/1	#500 MCM #3/0N	"	"	" #2 "	" #2	"	"
P-22	4"	3	#500 MCM	"	"	" #1 "	PUMPS #3 & 4 MOTOR STARTER BUS	"	4160V-3Φ 3W
P-23	4"	3	#500 MCM	"	"	" #2 "	PUMPS #1 & 2 MOTOR STARTER BUS	"	"
P-24	3"	3	#2	"	"	AUX. TRANSFORMER FEEDER SW	300 KVA TRANSFORMER	"	"
P-25	3"	3	#1/0	"	"	PUMP #1 MOTOR STARTER	PUMP #1 MOTOR TERMINAL BOX	"	"
P-26	3"	3	#2	"	"	" #2 "	" #2 "	"	"
P-27	3"	3	#2	"	"	" #3 "	" #3 "	"	"
P-28	3"	-	-	-	-	" #4 "	" #4 "	"	RUN CONDUIT ONLY
P-29	3"	3	#600 MCM	THHN	600	300 KVA TRANSFORMER	POWER PANEL PP-1	"	480V-3Φ-3W
P-30	2"	3	#1/0	"	"	POWER PANEL PP-1	AIR HANDLING UNIT HV #1	"	"
P-31	3/4"	3	#10	THWN	"	"	30A FUSED DISC SW FOR 3 TON MONORAIL	"	"
P-32	3/4"	3	#10	"	"	"	DUCT HEATER DH-2 NON-FUSED DISC SW	"	"
P-33	3/4"	3	#12	"	"	"	DUCT HEATER DH-1 NON-FUSED DISC SW	"	"
P-34	1 1/4"	4	#2	"	"	LIGHTING PANEL LP-1	LIGHTING PANEL LP-2	"	120/208V-3Φ-4W
P-35	3/4"	3	#12	"	"	POWER PANEL PP-1	CHLORINATION BOOSTER PUMP MOTOR STARTER	"	480V-3Φ-3W
P-36	1"	4	#4	"	"	"	60A WELDING RECEPTACLE	"	"
P-37	3/4"	3	#12	"	"	"	TRANSFER PUMP MOTOR STARTER	"	"
P-38	3/4"	3	#12	"	"	"	AIR COMPRESSOR MOTOR STARTER	"	"
P-39	3/4"	3	#10	"	"	"	CONTROL PANEL FOR VACUUM PRIME PUMPS	"	"
P-40	1"	3	#4	"	"	"	45 KVA LIGHTING TRANSFORMER	"	"
P-41	3/4"	3	#8	THHN	"	"	STARTER RACK	"	"
P-42	3/4"	3	#12	"	"	STARTER RACK	EXHAUST FAN EF-1	"	"
P-43	3/4"	3	#12	"	"	"	" EF-2	"	"
P-44	3/4"	3	#12	"	"	"	" EF-3	"	"
P-45	3/4"	3	#12	"	"	"	" EF-4	"	"

CONDUIT NO.	CONDUIT SIZE	CABLE COND.	CABLE SIZE	CABLE INS	CABLE VOLT	CONDUIT FROM	CONDUIT TO	FOR	REMARKS
P-46	3/4"	3	#12	THWN	600	STARTER RACK	SUMP PUMP		480V-3Φ-3W
P-47	2"	4	#2/0	"	"	45 KVA LIGHTING TRANSFORMER	LIGHTING PANEL LP-1		120/208V-3Φ-4W
P-48	3/4"	3	#6	"	"	POWER PANEL PP-1	60A FUSED DISC SW FOR 7 1/2 TON BRIDGE CRANE		480V-3Φ-3W
C-1	2 1/2"	123	#12	THWN	600	INSTRUMENT PANEL	HANDHOLE - A	VC-1 THRU VC-9	
C-2	2"	73	#12	"	"	HANDHOLE - A	" B	VC-1,2,6,8,9	
C-3	1 1/4"	41	#12	"	"	" B	" C	VC-1,6,8	
C-4	1 1/4"	32	#12	"	"	" B	" D	VC-2,9	
C-5	1"	10	#12	"	"	" A	" E	VC-5,7	
C-6	1"	9	#12	"	"	" E	" F	VC-7	
C-7	3/4"	16	#12	"	"	" A	VC-4	CONTROL WIRING	
C-8	3/4"	16	#12	"	"	" A	VC-3	"	
C-9	3/4"	16	#12	"	"	" C	VC-1	"	
C-10	3/4"	9	#12	"	"	" C	VC-6	"	
C-11	3/4"	16	#12	"	"	" C	VC-8	"	
C-12	3/4"	16	#12	"	"	" D	VC-2	"	
C-13	3/4"	16	#12	"	"	" D	VC-9	"	
C-14	3/4"	9	#12	"	"	" E	VC-5	"	
C-15	3/4"	9	#12	"	"	" F	VC-7	"	
C-16	3/4"	18	#14	"		INCOMING LINE SWITCHGEAR	INSTRUMENT PANEL	POWER STATUS & POWER DEMAND	
C-17	1"	-	-	-	-	PUMP #4 MOTOR STARTER	"		RUN CONDUIT ONLY
C-18	1"	30	#14	THWN	600V	PUMP #3 MOTOR STARTER	"		
C-19	1"	30	#14	"	"	PUMP #2 MOTOR STARTER	"		
C-20	1"	30	#14	"	"	PUMP #1 MOTOR STARTER	"		
C-21	3/4"	-	-	-	-	PUMP #4 MOTOR STARTER	PUMP #4 TERMINAL BOX FOR TEMP. SENSOR		
C-22	3/4"	23	#14	THWN	600V	PUMP #3 MOTOR STARTER	PUMP #3 "		
C-23	3/4"	23	#14	"	"	PUMP #2 MOTOR STARTER	PUMP #2 "		
C-24	3/4"	23	#14	"	"	PUMP #1 MOTOR STARTER	PUMP #1 "		
C-25	3/4"	-	-	-	-	PUMP #4 MOTOR STARTER	(FUTURE) PUMP PRIME PS & CV CONTROL WIRING		RUN CONDUIT ONLY
C-26	3/4"	16	#12	THWN	600V	PUMP #3 MOTOR STARTER	"		
C-27	3/4"	16	#12	"	"	PUMP #2 MOTOR STARTER	"		
C-28	3/4"	16	#12	"	"	PUMP #1 MOTOR STARTER	"		
C-29	3/4"	2	#14	"	"	INSTRUMENT PANEL	PS AT HYDRONEUMATIC TANK AC PANEL	LOW PRESSURE ALARM	1 CONTACT
C-30	3/4"	2	#14	"	"	"	VACUUM PRIME PUMP PANEL	"	1 CONTACT
C-31	3/4"	6	#14	"	"	"	CHLORINATORS (FUTURE)	ALARMS	
C-32	3/4"	2	#14	"	"	"	CHLORINATOR BOOSTER PUMP MOTOR STARTER		
C-33	3/4"	2	#14	"	"	"	FIRE ALARM PANEL	ALARM	

E-9

AS BUILT 8/16/82

NO.	DESCRIPTION	BY	FIRM	DATE	BY	DATE
	REVISIONS	SUBMITTAL			BUREAU OF WATER APPROVAL	

CONSULTING ENGINEERS
SUBMITTED BY: JULIAN C. MADISON
REG. ENGR. GA. NO. 10072 DATE 1-29-79
MADISON · MADISON · INTERNATIONAL / FLOOD & ASSOCIATES, INC.

CITY OF ATLANTA
BUREAU OF WATER
T. E. STALLWORTH, JR., DIRECTOR
APPROVED BY:
DATE: 3-15-79

CITY OF ATLANTA, GEORGIA
DEPARTMENT OF ENVIRONMENT & STREETS BUREAU OF WATER
WATER IMPROVEMENT PROGRAM
EAST SIDE HARTSFIELD INTERNATIONAL AIRPORT
WATER STORAGE AND PUMPING STATION

MADISON · MADISON · INTERNATIONAL / FLOOD & ASSOCIATES, INC.
CONSULTING ENGINEERING
Joint Venture
ATLANTA, GEORGIA

DESIGNED BY: D.P.A. CHECKED BY: C.P.S. DATE: AUG. 1979
DRAWN BY: T.D. SCALE: NONE

CONDUIT AND CABLE SCHEDULE

PROJ. NO. 7749-02 SHEET NO 51 OF 62

AF 7145

CONDUIT		CABLE				CONDUIT FROM	CONDUIT TO	FOR	REMARKS
NO.	SIZE	COND	SIZE	INS	VOLT				
S-1	2½"	14 PAIR	14	XLP	300	INSTRUMENT PANEL	HANDHOLE - A	PT-1, 2, 3 LT-1, 2 CE-1, 2 VC-5, 6, 7	TWISTED PAIR SHIELDED
S-2	2"	5 "	14	"	"	HANDHOLE - A	" B	PT-1, 3 LT-1, 2 VC-6	"
S-3	1"	2 "	14	"	"	" B	" C	VC-6, PT-3	"
S-4	1"	1 "	14	"	"	" B	" D	PT-1	"
S-5	2"	9 "	14	"	"	" A	" E	FT-1, 2 CE-1, 2 PT-2 VC-5, 7	"
S-6	1½"	5 "	14	"	"	" E	" F	PT-2, VC-7, CE-2, FT-2	"
S-7	¾"	1 "	14	"	"	" B	LT-1		"
S-8	¾"	1 "	14	"	"	" B	LT-2		"
S-9	¾"	1 "	14	"	"	" C	PT-3		"
S-10	¾"	1 "	14	"	"	" D	PT-1		"
S-11	¾"	2 "	14	"	"	" E	CE-1		"
S-12	¾"	1 "	14	"	"	" E	FT-1		"
S-13	¾"	2 "	14	"	"	" F	CE-2		"
S-14	¾"	1 "	14	"	"	" F	FT-2		"
S-15	¾"	1 "	14	"	"	" F	PT-2		"
S-16	¾"	1 "	14	"	"	" C	VC-6		"
S-17	¾"	1 "	14	"	"	" E	VC-5		"
S-18	¾"	1 "	14	"	"	" F	VC-7		"
S-19	¾"	1 "	14	"	"	INSTRUMENT PANEL	PRESSURE TRANSMITTER PT-4		"
S-20	1"	4 "	14	"	"	"	CHLORINATORS	PACING SIGNALS	"
S-21	¾"	(SEE NOTE #2)				"	MICROPHONE #1		
S-22	¾"		"			"	" #2		
S-23	¾"		"			"	" #3		
S-24	¾"		"			"	" #4		
S-25	1½"	-	-	-	-	"	TELEPHONE TERMINAL CAB.		WITH PULL WIRE
F-1	2"	-	-	-	-	INSTRUMENT PANEL	HANDHOLE - A	FUTURE USE	
F-2	2"	-	-	-	-	HANDHOLE - A	" B	"	
F-3	2"	-	-	-	-	" B	" C	"	
F-4	2"	-	-	-	-	" B	" D	"	
F-5	2"	-	-	-	-	" A	" E	"	
F-6	2"	-	-	-	-	" E	" F	"	

NOTES:

1. THIS SCHEDULE IS PREPARED BASED ON GALVANIZED RIGID STEEL METAL CONDUIT.
2. MICROPHONE CABLE SIZE SHALL BE AS PER EQUIPMENT MANUFACTURER.
3. FOR ELECTRICAL POWER PLAN SEE DWG. #E-5.
4. FOR SITE PLAN SEE DWG. E-1.
5. XLP - CROSS LINK POLYETHYLENE

E-10

AS BUILT 8|16|82

NO.	DESCRIPTION	BY	FIRM	DATE	BY	DATE
	REVISIONS	SUBMITTAL			BUREAU OF WATER APPROVAL	

CONSULTING ENGINEERS
SUBMITTED BY: JULIAN C. MADISON
REG. ENGR. GA. NO. 10072 DATE 1-29-79
MADISON · MADISON · INTERNATIONAL / FLOOD & ASSOCIATES, INC.

CITY OF ATLANTA
BUREAU OF WATER
T.E. STALLWORTH, JR., DIRECTOR
APPROVED BY: [signature]
DATE: 3-15-79

CITY OF ATLANTA, GEORGIA
DEPARTMENT OF ENVIRONMENT & STREETS BUREAU OF WATER
WATER IMPROVEMENT PROGRAM
EAST SIDE HARTSFIELD INTERNATIONAL AIRPORT
WATER STORAGE AND PUMPING STATION

MADISON · MADISON · INTERNATIONAL / FLOOD & ASSOCIATES, INC.
CONSULTING ENGINEERING
Joint Venture
ATLANTA, GEORGIA

DESIGNED BY: D.P.A. CHECKED BY: C.P.S. DATE: AUG. 1979
DRAWN BY: T.D. SCALE: NONE

CONDUIT AND CABLE SCHEDULE

PROJ. NO. 7749-02 SHEET NO. 52 OF 62

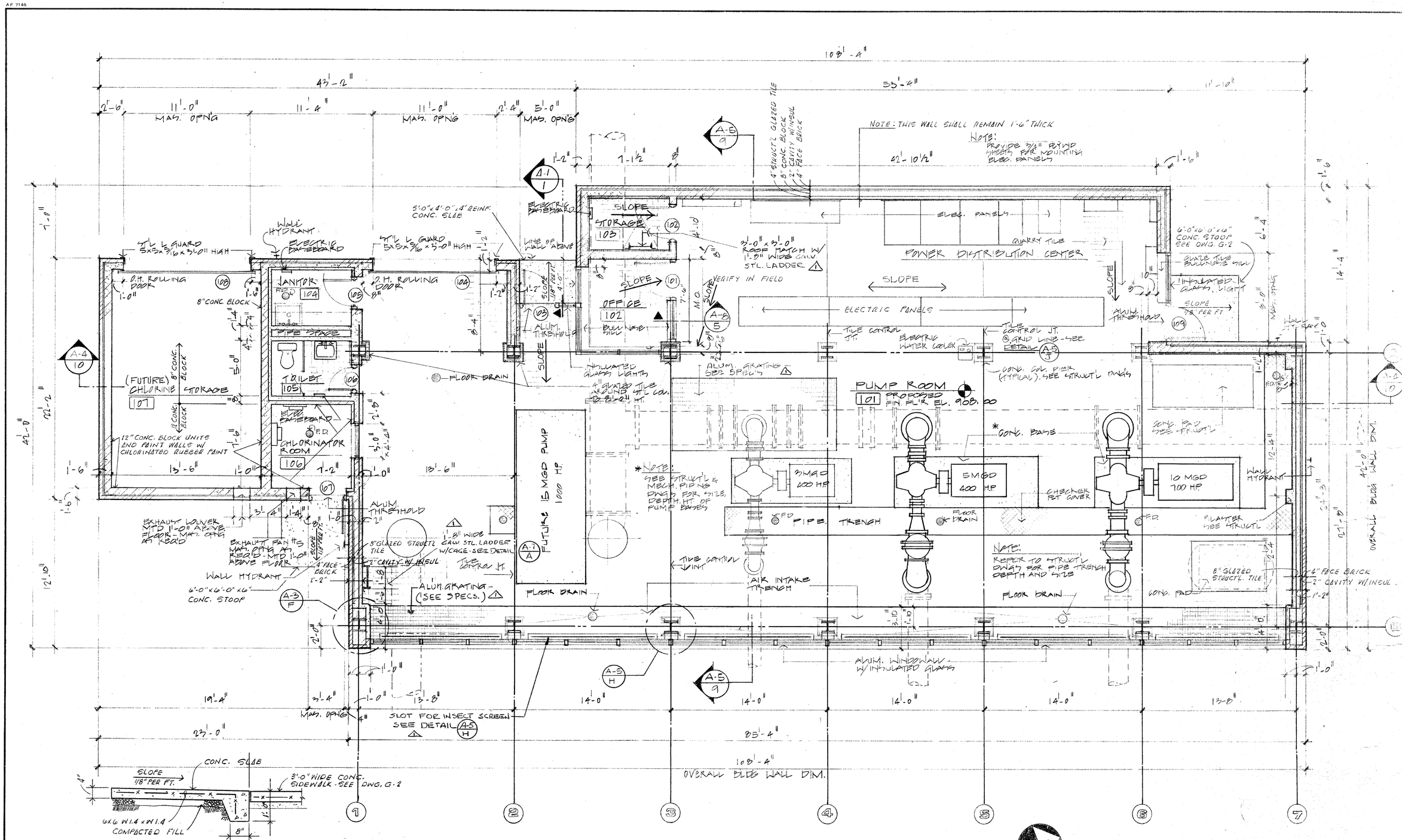

PUMP ROOM FLOOR PLAN

1/4" = 1'-0"

A-1

NO.	DESCRIPTION	BY	FIRM	DATE	BY	DATE
△1	PRE-BID REVISIONS		MMI	7/79		
	REVISIONS	SUBMITTAL			BUREAU OF WATER APPROVAL	

CONSULTING ENGINEERS
SUBMITTED BY: [signature]
REG. ENGR. GA. NO. 3334 DATE FEB. 1979
MADISON · MADISON · INTERNATIONAL / FLOOD & ASSOCIATES, INC.

CITY OF ATLANTA
BUREAU OF WATER
T. E. STALLWORTH, JR., DIRECTOR
APPROVED BY: [signature]
DATE: 3-15-79

CITY OF ATLANTA, GEORGIA
DEPARTMENT OF ENVIRONMENT & STREETS BUREAU OF WATER
WATER IMPROVEMENT PROGRAM
EAST SIDE HARTSFIELD INTERNATIONAL AIRPORT
WATER STORAGE AND PUMPING STATION

MADISON · MADISON · INTERNATIONAL / FLOOD & ASSOCIATES, INC.
CONSULTING ENGINEERING
Joint Venture
ATLANTA, GEORGIA

DESIGNED BY: J. L. CHECKED BY: W. M. DATE: AUG. 1979
DRAWN BY: J. G. SCALE: 1/4" = 1'-0"

PUMPING STATION FLOOR PLAN

PROJ. NO. 7749-02 SHEET NO. 53 OF 62

A F 7145

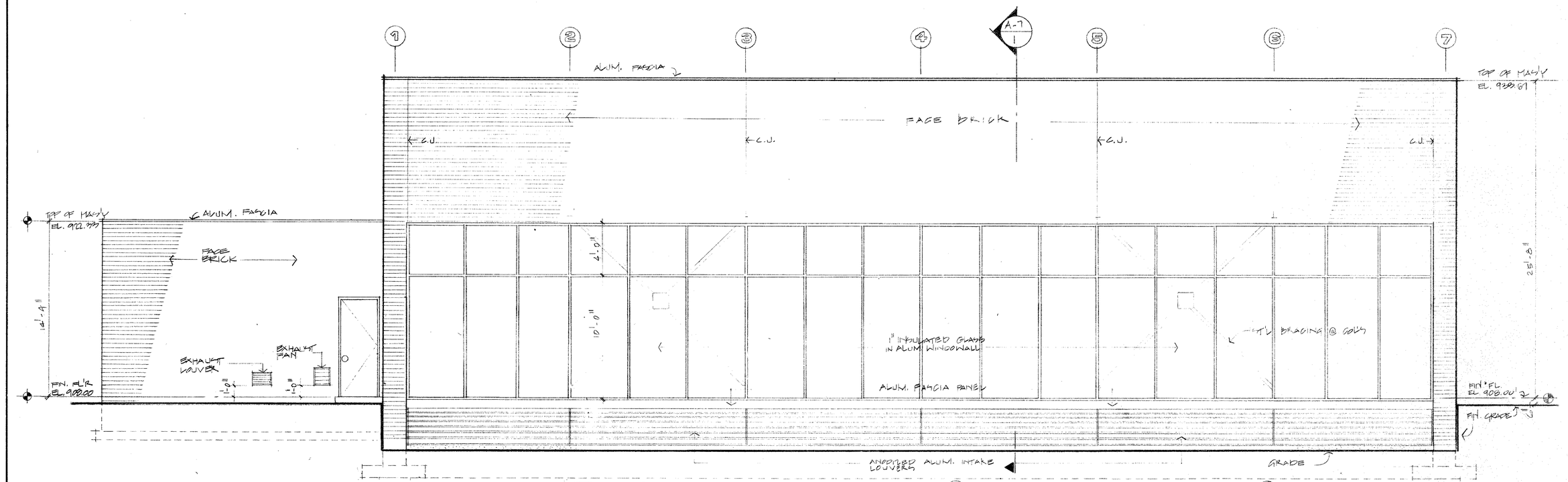

EAST ELEVATION
1/4" = 1'-0"

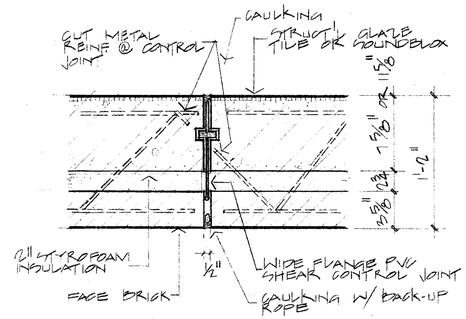

TYP. CONTROL JT.
1½" = 1'-0"

A-2 / D

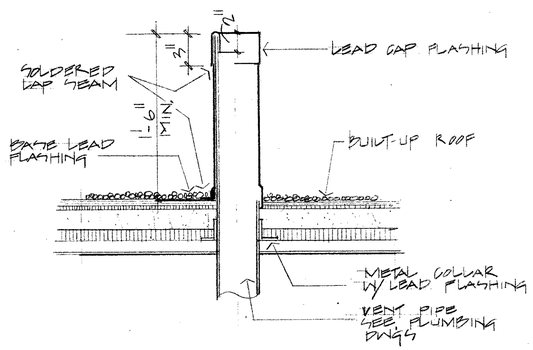

DETAIL - ROOF VENT
1½" = 1'-0"

A-2 / A&E

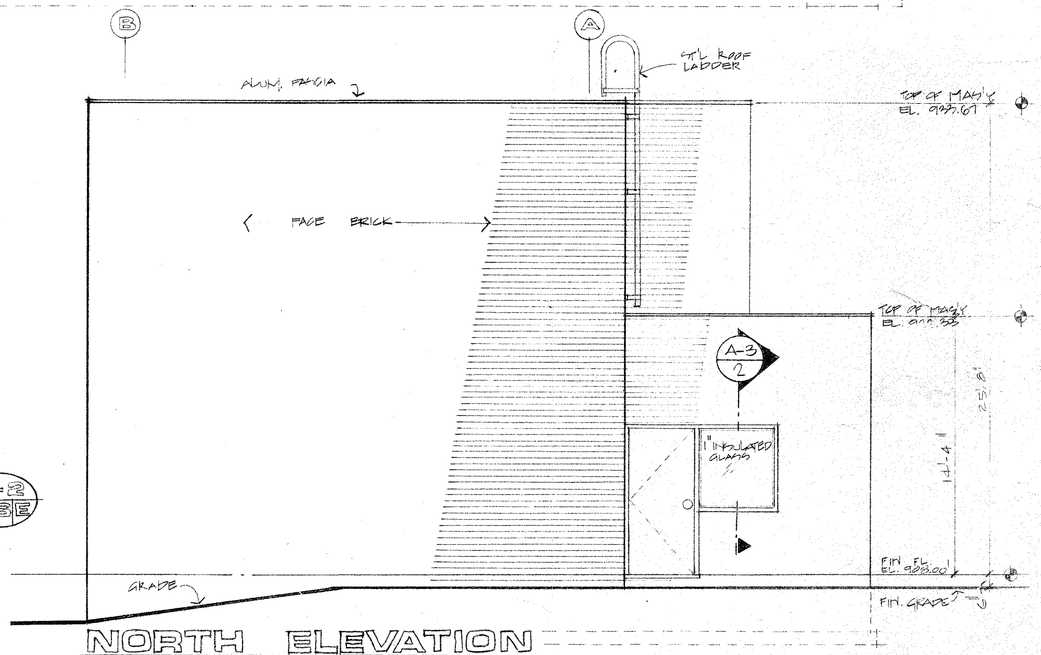

NORTH ELEVATION
1/4" = 1'-0"

A-2

AS BUILT 8/16/82

NO.	DESCRIPTION	BY	FIRM	DATE	BY	DATE
	REVISIONS	SUBMITTAL			BUREAU OF WATER APPROVAL	

CONSULTING ENGINEERS
SUBMITTED BY: [signature]
REG. ENGR. GA. NO. 33334 DATE FEB. 1979
MADISON · MADISON · INTERNATIONAL / FLOOD & ASSOCIATES, INC.

CITY OF ATLANTA
BUREAU OF WATER
T. E. STALLWORTH, JR., DIRECTOR
APPROVED BY: [signature]
DATE: 3-15-79

CITY OF ATLANTA, GEORGIA
DEPARTMENT OF ENVIRONMENT & STREETS BUREAU OF WATER
WATER IMPROVEMENT PROGRAM
EAST SIDE HARTSFIELD INTERNATIONAL AIRPORT
WATER STORAGE AND PUMPING STATION

MADISON · MADISON · INTERNATIONAL / FLOOD & ASSOCIATES, INC.
CONSULTING ENGINEERING
Joint Venture
ATLANTA, GEORGIA

DESIGNED BY: J.L. CHECKED BY: W.M. DATE: AUG. 1979
DRAWN BY: P.B. SCALE: 1/4" = 1'-0"

ELEVATIONS

PROJ. NO. 7749-02 SHEET NO. 54 OF 62

AF 7145

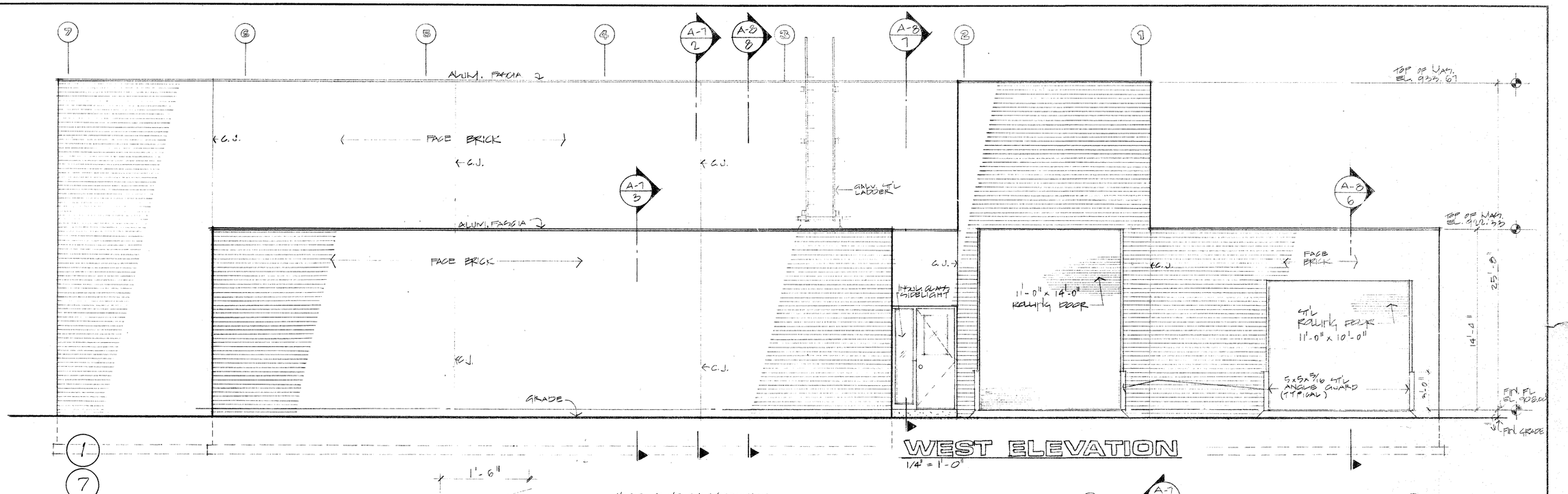

WEST ELEVATION

1/4" = 1'-0"

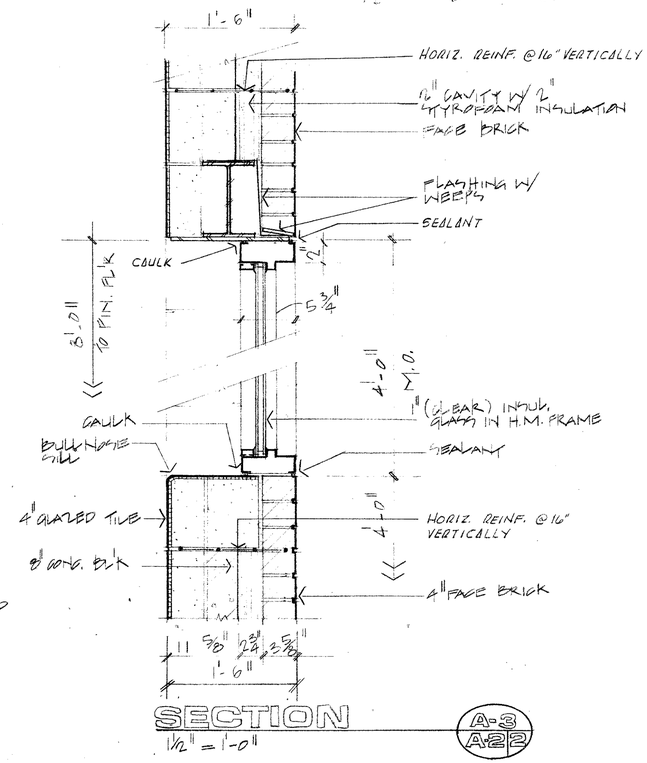

SECTION

1½" = 1'-0"

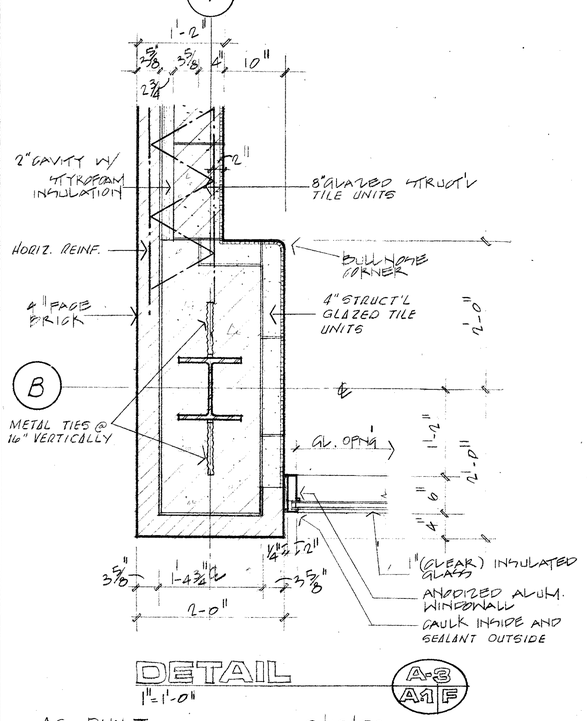

DETAIL

1" = 1'-0"

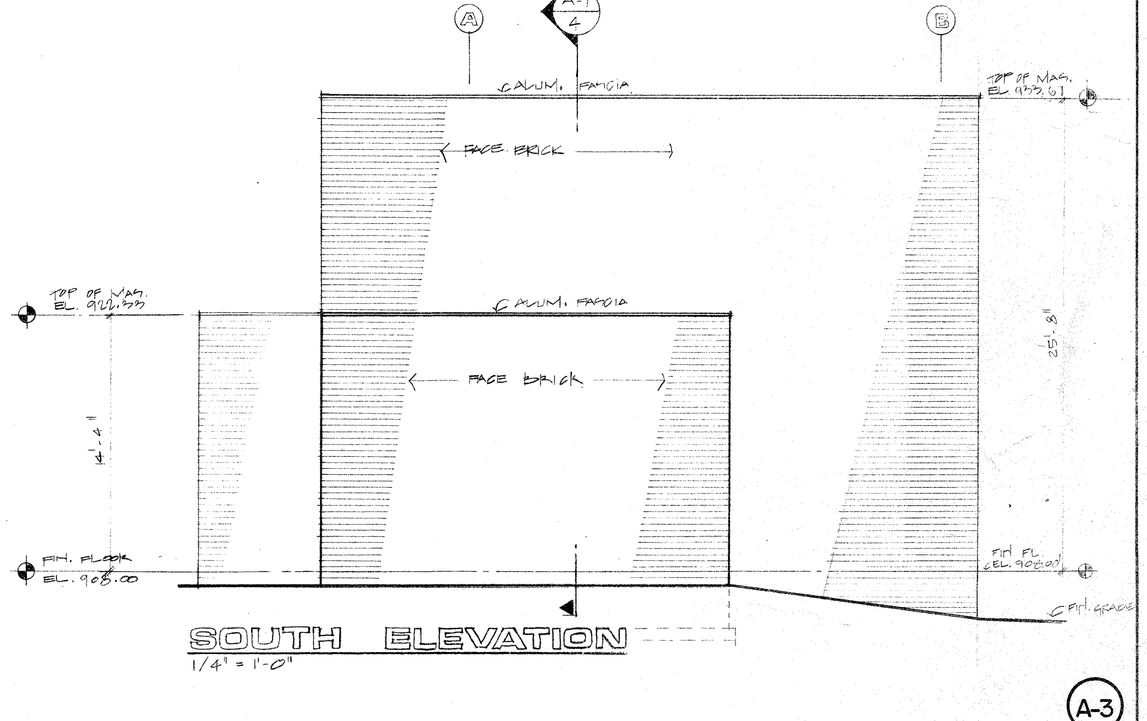

SOUTH ELEVATION

1/4" = 1'-0"

A-8 / A1F

A-3 / A22

A-3

AS BUILT 8/16/82

NO.	DESCRIPTION	BY	FIRM	DATE	BY	DATE
	REVISIONS	SUBMITTAL			BUREAU OF WATER APPROVAL	

CONSULTING ENGINEERS
SUBMITTED BY:
REG. ENGR. GA. NO. 3334 DATE FEB. 1979
MADISON · MADISON · INTERNATIONAL / FLOOD & ASSOCIATES, INC.

CITY OF ATLANTA
BUREAU OF WATER
T.E. STALLWORTH, JR., DIRECTOR
APPROVED BY:
DATE: 3-15-79

DEPARTMENT OF ENVIRONMENT AND STREETS

CITY OF ATLANTA, GEORGIA

DEPARTMENT OF ENVIRONMENT & STREETS BUREAU OF WATER

WATER IMPROVEMENT PROGRAM

EAST SIDE HARTSFIELD INTERNATIONAL AIRPORT
WATER STORAGE AND PUMPING STATION

MADISON · MADISON · INTERNATIONAL / FLOOD & ASSOCIATES, INC.
CONSULTING ENGINEERING
Joint Venture
ATLANTA, GEORGIA

DESIGNED BY: J.L. CHECKED BY W.M. DATE AUG. 1979
DRAWN BY P.B. SCALE AS SHOWN

ELEVATIONS

PROJ. NO. 7749-02

SHEET NO. 55 OF 62

AF 7145

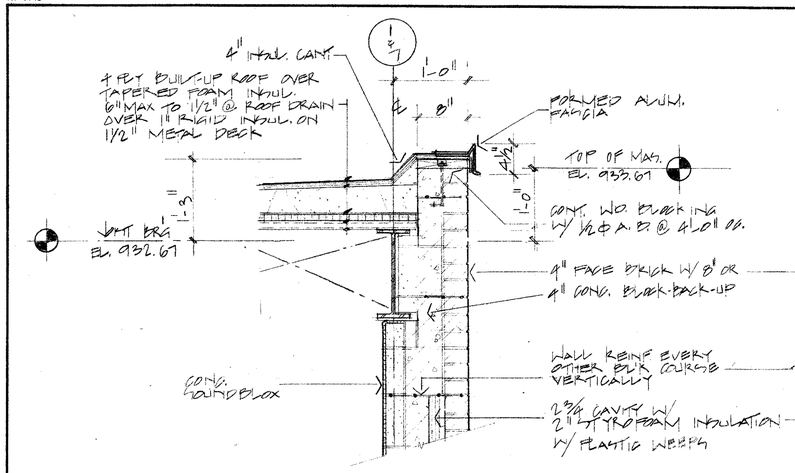

DETAIL
1"=1'-0"
A-4 / A7 A

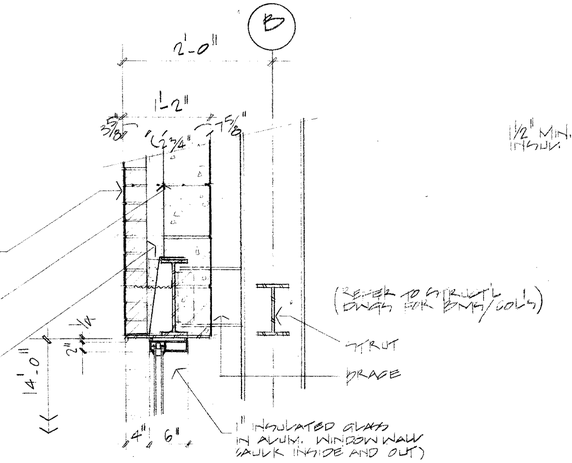

DETAIL
1"=1'-0"
A-4 / A7 B

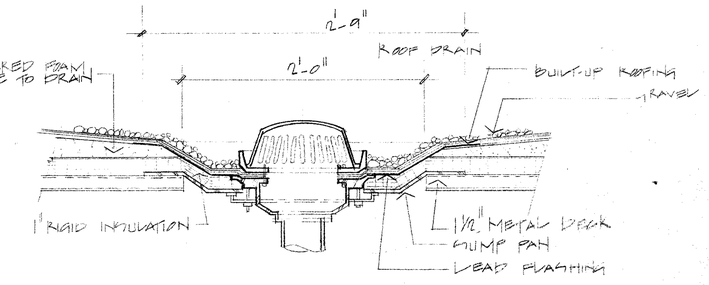

DETAIL - ROOF DRAIN
1½"=1'-0"
A-4 / A6 C
1

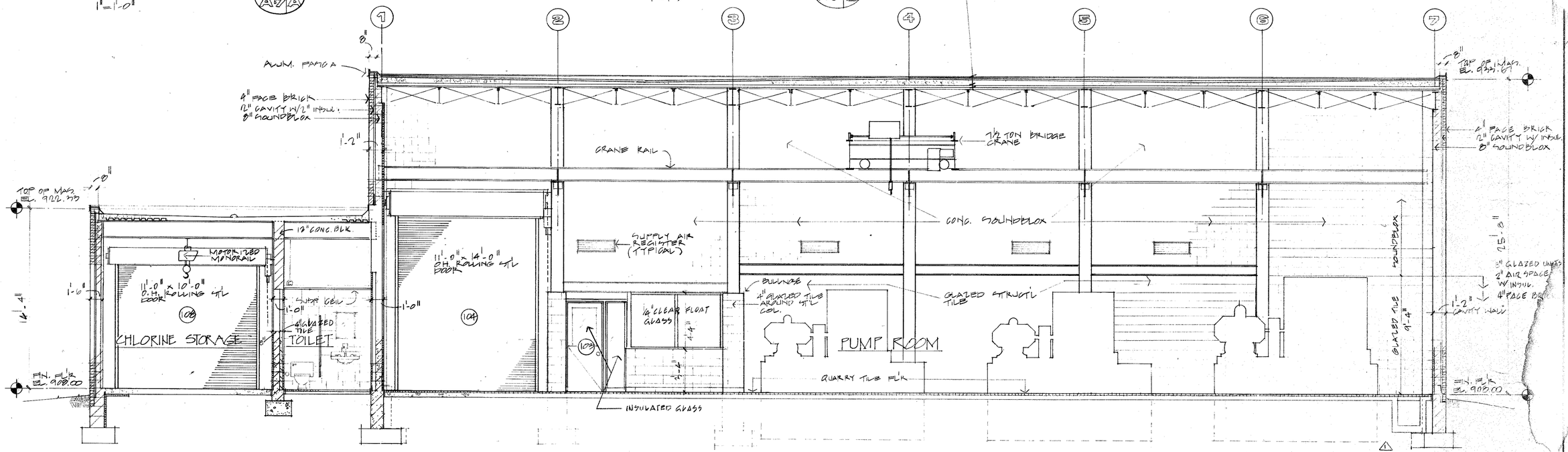

SECTION
1/4"=1'-0"
A-4 / A1 10

GENERAL NOTE:
FOR FOOTING SIZE AND DEPTH REFER TO STRUCTURAL DWGS

A-4

AS BUILT 8/16/82

NO.	DESCRIPTION	BY	FIRM	DATE	BY	DATE
1	PRE-BID REVISIONS		MMI	7/79		
	REVISIONS		SUBMITTAL		BUREAU OF WATER APPROVAL	

CONSULTING ENGINEERS
SUBMITTED BY: _____
REG. ENGR. GA. NO. 3334 DATE FEB. 1979
MADISON · MADISON · INTERNATIONAL / FLOOD & ASSOCIATES, INC.

CITY OF ATLANTA
BUREAU OF WATER
T. E. STALLWORTH, JR., DIRECTOR
APPROVED BY: _____
DATE: 3-15-79

CITY OF ATLANTA, GEORGIA
DEPARTMENT OF ENVIRONMENT & STREETS BUREAU OF WATER
WATER IMPROVEMENT PROGRAM
EAST SIDE HARTSFIELD INTERNATIONAL AIRPORT
WATER STORAGE AND PUMPING STATION

MADISON · MADISON · INTERNATIONAL / FLOOD & ASSOCIATES, INC.
CONSULTING ENGINEERING
Joint Venture
ATLANTA, GEORGIA

DESIGNED BY: J.L. CHECKED BY: W.M. DATE: AUG. 1979
DRAWN BY: W.M. J.G. SCALE: AS SHOWN

SECTION AND DETAILS

PROJ. NO. 7749-02 SHEET NO. 56 OF 62

NOTE:

DEDICATION PLAQUE

THE DEDICATION PLAQUE SHALL BE BRONZE 20 INCHES BY 30 INCHES IN SIZE. THE LETTERING SHALL BE OF THE MODERN ROMAN TYPE OR OTHERWISE AS MAY BE APPROVED AND SHALL BE RAISED 1/8 INCH ABOVE THE BACKGROUND WHICH SHALL BE AT LEAST 1/4 INCH THICK. THE BORDER AND THE FACE OF LETTERS SHALL BE FINISHED WITH A SATIN FINISH; THE PANEL FIELD OR BACKGROUND SHALL BE SANDED OR LEATHER TEXTURE.

THE OWNER WILL SUPPLY THE NAMES TO BE INSCRIBED. THE CONTRACTOR SHALL SUBMIT A RUBBING OF THE DEDICATION PLAQUE FOR APPROVAL OF THE ENGINEER PRIOR TO FINAL FABRICATION.

EDGES SHALL BE SHARP AND LINES TRUE, ALL IN ACCORDANCE WITH THE BEST MONUMENTAL WORK. THE PLAQUE SHALL BE SCREWED TO THE WALL BY FOUR SCREWS OF SUITABLE SIZE SET INTO LEAD ANCHORS OR OTHER APPROVED DEVICES. THE FASTENINGS SHALL BE CONCEALED OR COVERED BY ORNAMENTAL TAMPER-PROOF ROSETTES.

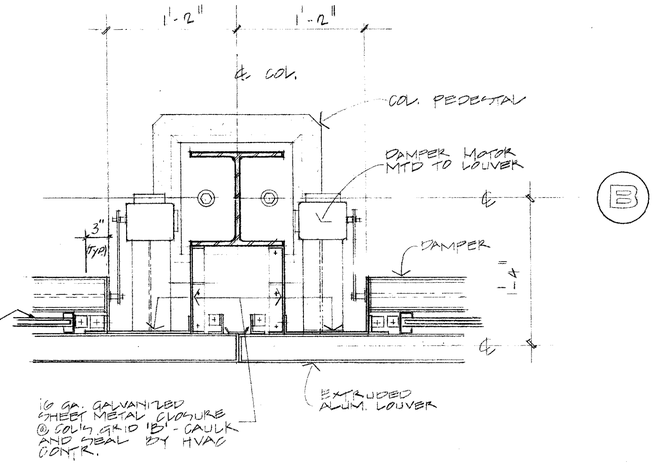

DETAIL A-5 / A1H

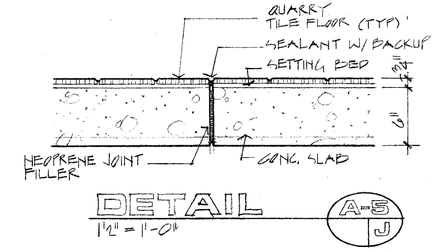

DETAIL 1½" = 1'-0" A-5 / J

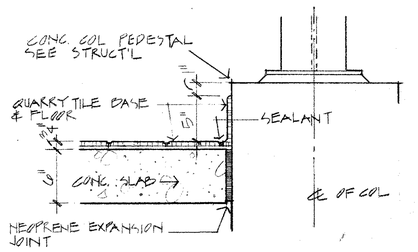

DETAIL 1½" = 1'-0" A-5 / K

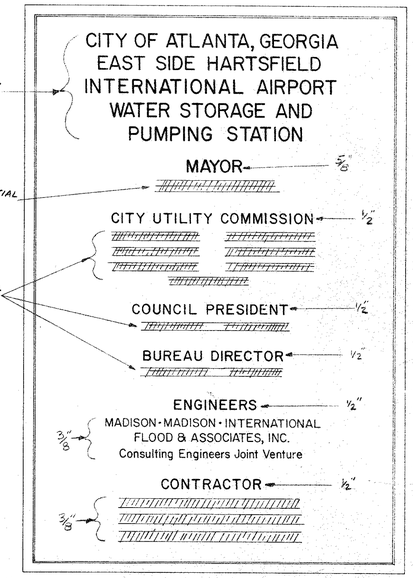

DEDICATION PLAQUE DETAIL A-5 / L

SEE NOTE THIS SHEET
LETTER HEIGHTH AS INDICATED

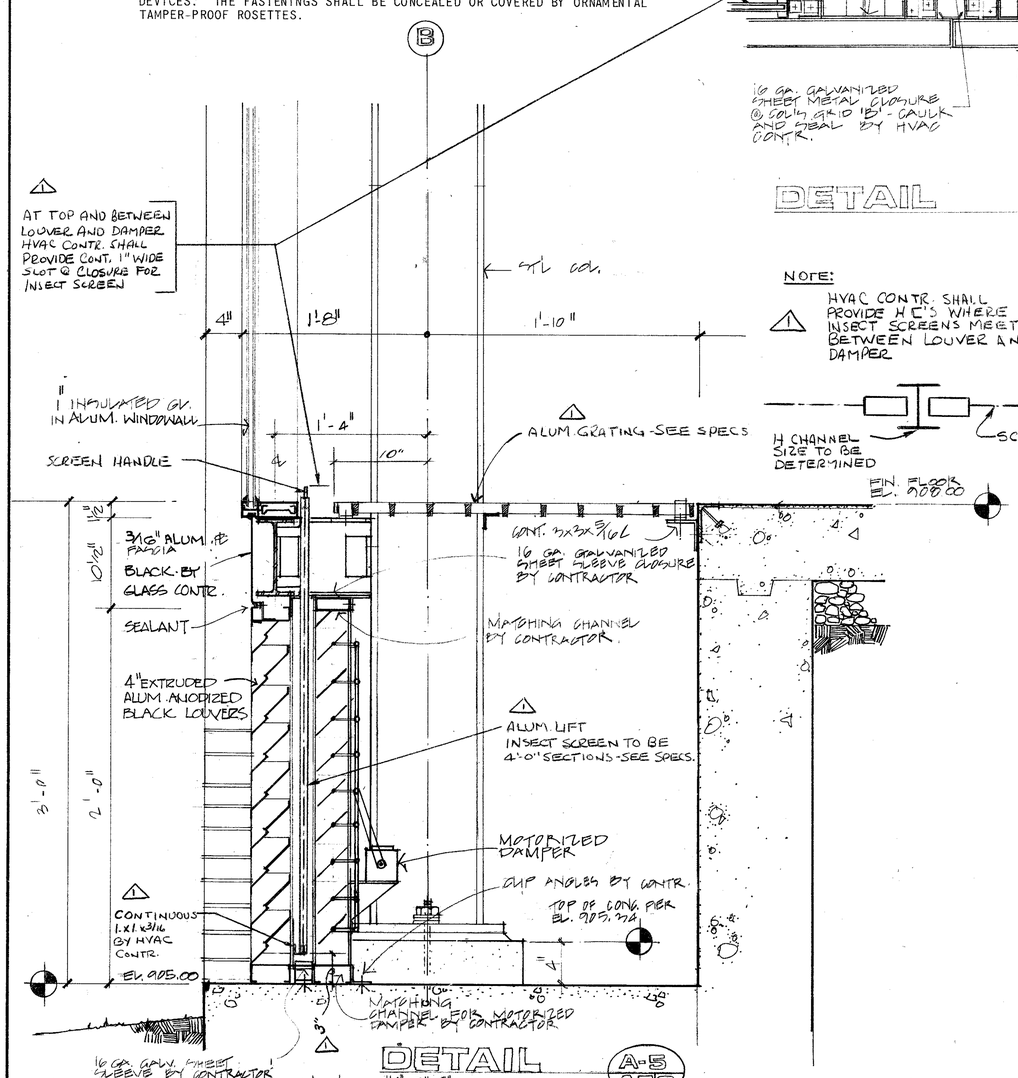

DETAIL 1½" = 1'-0" A-5 / A5G

NOTE:

1 HVAC CONTR. SHALL PROVIDE H.C.'S WHERE INSECT SCREENS MEET BETWEEN LOUVER AND DAMPER

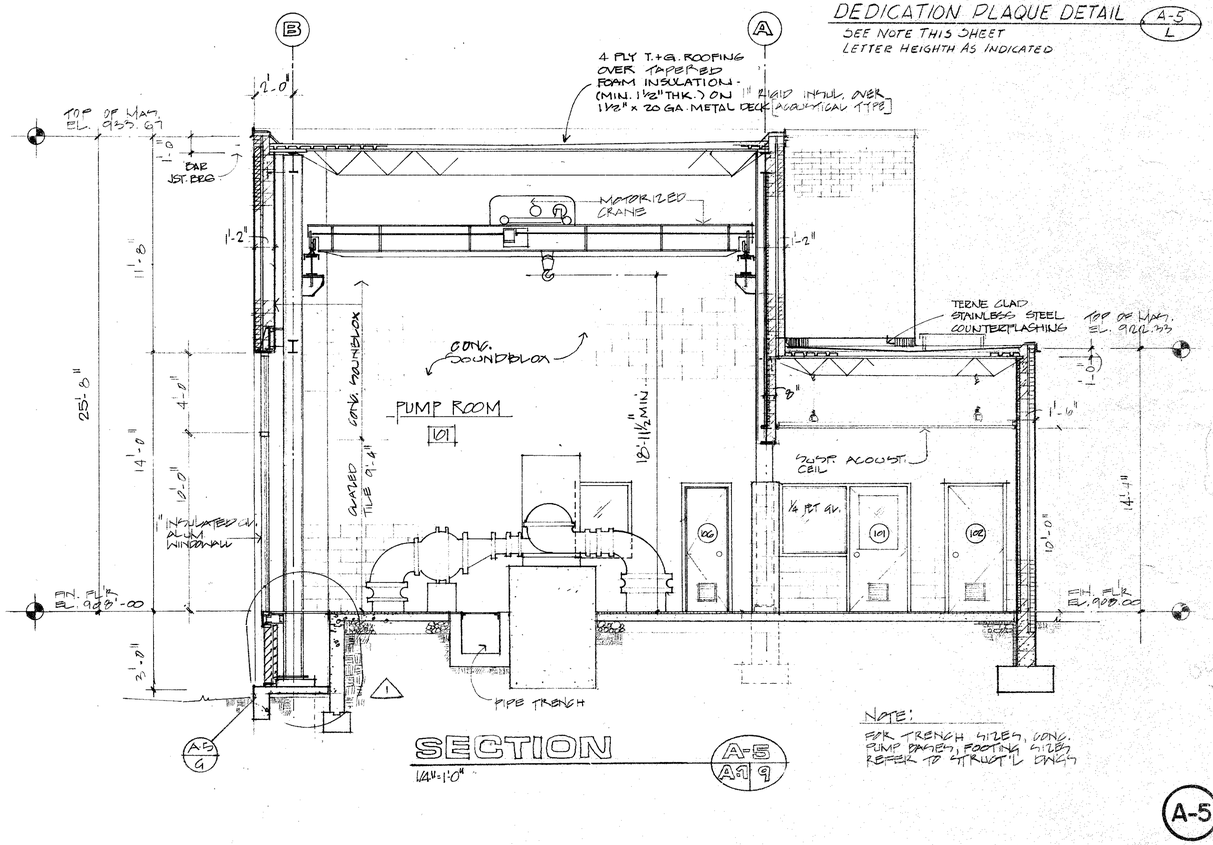

SECTION 1/4" = 1'-0" A-5 / A19

NOTE:
PIPE TRENCH SIZES, CONC. PUMP BASES, FOOTING SIZES REFER TO STRUCT'L DWGS

A-5

NO.	DESCRIPTION	BY	DATE	BY	DATE
	REVISIONS	SUBMITTAL		BUREAU OF WATER APPROVAL	
1	PRE-BID REVISIONS	MMJ	7/79		

CONSULTING ENGINEERS
SUBMITTED BY:
REG. ENGR. GA. NO. 13334 DATE FEB. 1979
MADISON · MADISON · INTERNATIONAL / FLOOD & ASSOCIATES, INC.

CITY OF ATLANTA
BUREAU OF WATER
T. E. STALLWORTH, JR., DIRECTOR
APPROVED BY:
DATE:

CITY OF ATLANTA, GEORGIA
DEPARTMENT OF ENVIRONMENT & STREETS BUREAU OF WATER
WATER IMPROVEMENT PROGRAM
EAST SIDE HARTSFIELD INTERNATIONAL AIRPORT
WATER STORAGE AND PUMPING STATION

MADISON · MADISON · INTERNATIONAL / FLOOD & ASSOCIATES, INC.
CONSULTING ENGINEERING
Joint Venture
ATLANTA, GEORGIA

DESIGNED BY: J.L. CHECKED BY: W.M. DATE: AUG. 1979
DRAWN BY: W.M., J.G. SCALE: AS SHOWN

SECTION AND DETAILS

PROJ. NO. 7749-02 SHEET NO. 57 OF 62

AF 7145

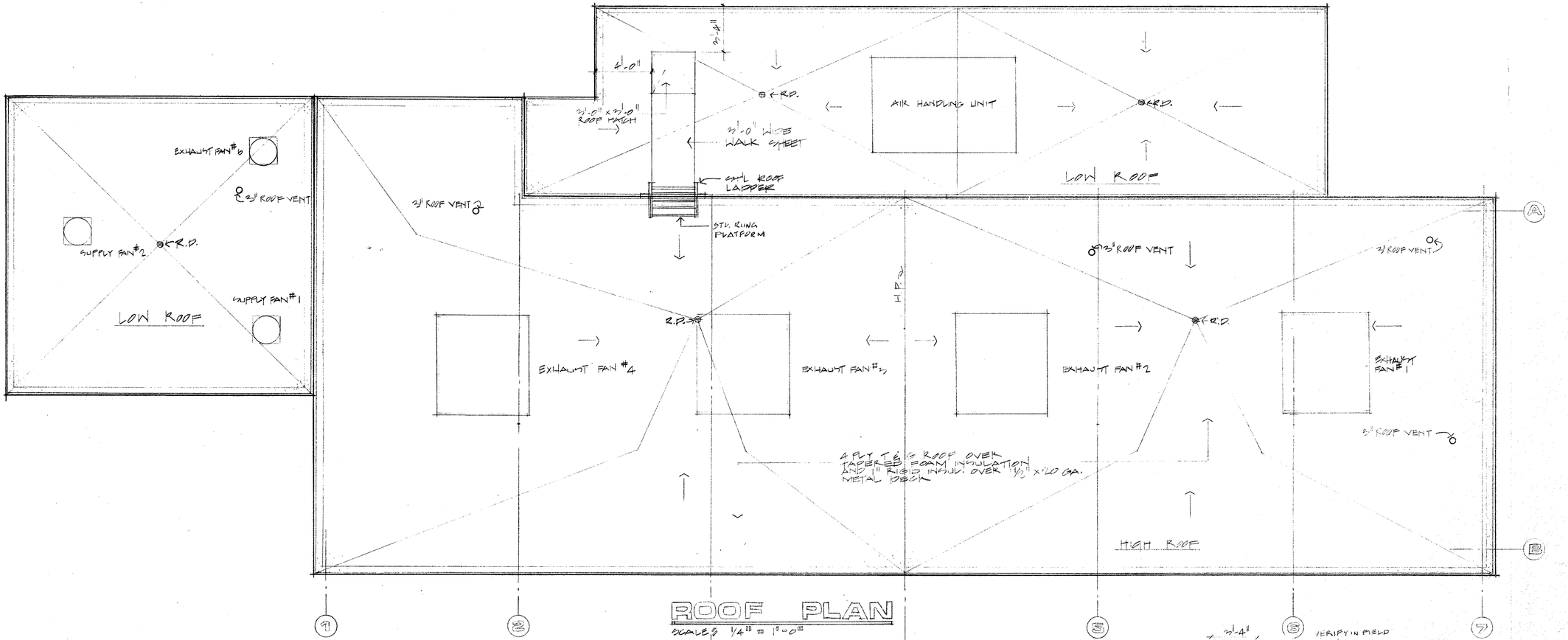

ROOF PLAN

SCALE: 1/4" = 1'-0"

ROOM FINISH SCHEDULE

RM. NO.	ROOM NAME	FLOOR MATERIAL	FLOOR FINISH	BASE	WALLS MAT'L	WALLS FINISH	CEILING MATERIAL	CEILING FINISH	HEIGHT	REMARKS
101	PUMP ROOM	QUARRY TILE	FACTORY	QUARRY TILE	STRUCTURAL GLAZED TILE	GLAZED	EXPOSED CEILING	PAINTED	SEE STRUCTURAL	
102	OFFICE	QUARRY TILE	FACTORY	QUARRY TILE	STRUCTURAL GLAZED TILE	GLAZED	ACOUSTICAL TILE	FACTORY	8'-0"	
103	STORAGE	QUARRY TILE	FACTORY	QUARRY TILE	STRUCTURAL GLAZED TILE	GLAZED	EXPOSED CEILING	PAINTED	SEE STR'L	
104	JANITOR	QUARRY TILE	FACTORY	QUARRY TILE	STRUCTURAL GLAZED TILE	GLAZED	DRYWALL	PAINTED	8'-0"	
105	TOILET	QUARRY TILE	FACTORY	QUARRY TILE	STRUCTURAL GLAZED TILE	GLAZED	DRYWALL	PAINTED	8'-0"	
106	CHLORINATOR ROOM	CONCRETE WITH HARDENER	PERMANENT COATING	NONE	8" OR 12" CONC BLK.	PAINT SEE SPECS.	EXPOSED CEILING	PAINTED	SEE STRUCTURAL	SEE SPECS FOR COATING
107	CHLORINE STORAGE	CONCRETE WITH HARDENER	SEALANT COATING	NONE	8" OR 12" CONC BLK.	PAINT SEE SPECS.	EXPOSED CEILING	PAINTED	SEE STRUCTURAL	SEE SPECS FOR COATING

DOOR SCHEDULE

DOOR NO.	DOOR SIZE	TYPE		FRAME TYPE	FRAME MAT'L	HEAD	JAMB	LOUVER	REMARKS
101	3'-0" x 7'-10" x 1 3/4	C	H.M.	2	H. M.	2	3/2	12x12	PLT GLASS LIGHT
102	3'-0" x 7'-10" x 1 3/4	A	H.M.	1	H. M.	2	2	12x12	
103	3'-0" x 7'-10" x 1 3/4	C	H.M.	4	H. M.	1	1/3	—	INSULATED GLASS
104	11'-0" x 14'-0"	B	STL	—	—	—	—	—	STL ROLL-UP DOOR
105	3'-0" x 7'-2" x 1 3/4	A	H.M.	1	H. M.	2	2	12x12	
106	2'-0" x 7'-2" x 1 3/4	A	H.M.	1	H. M.	2	2	12x12	
107	3'-0" x 7'-10" x 1 3/4	A	H.M.	1	H. M.	1	1		
108	11'-0" x 14'-0" x	B	STL	—	—	—	—	—	STL ROLL-UP DOOR INSULATED GLASS
109	3'-0" x 7'-10" x 1 3/8	C	H.M.	1	H M	1	1/3		

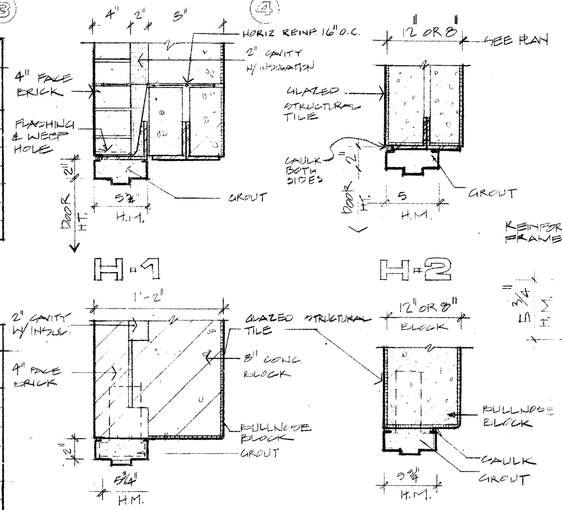

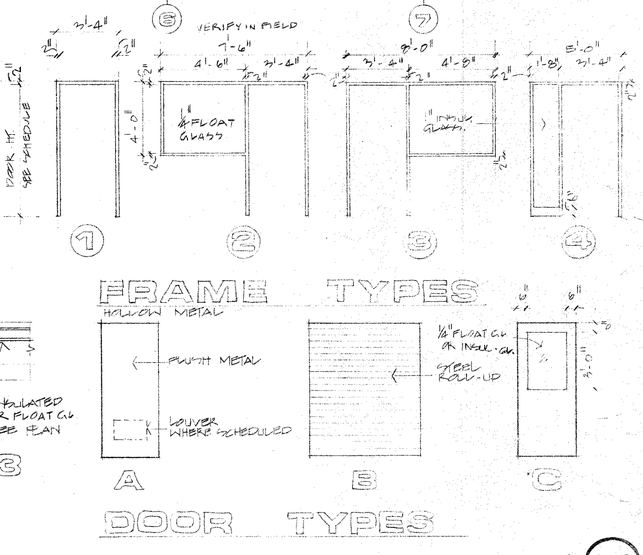

AS BUILT 8/16/82

A-6

NO.	DESCRIPTION	BY	FIRM	DATE	BY	DATE
	REVISIONS	SUBMITTAL			BUREAU OF WATER APPROVAL	

CONSULTING ENGINEERS
SUBMITTED BY:
REG. ENGR. GA. NO. 5534 DATE FEB. 1979
MADISON · MADISON · INTERNATIONAL / FLOOD & ASSOCIATES, INC.

CITY OF ATLANTA
BUREAU OF WATER
T. E. STALLWORTH, JR., DIRECTOR
APPROVED BY:
DATE: 3-15-79

CITY OF ATLANTA, GEORGIA

DEPARTMENT OF ENVIRONMENT & STREETS BUREAU OF WATER

WATER IMPROVEMENT PROGRAM

EAST SIDE HARTSFIELD INTERNATIONAL AIRPORT
WATER STORAGE AND PUMPING STATION

MADISON · MADISON · INTERNATIONAL / FLOOD & ASSOCIATES, INC.
CONSULTING ENGINEERING
Joint Venture
ATLANTA, GEORGIA

DESIGNED BY: J. L. | CHECKED BY: W. M. | DATE: AUG. 1979
DRAWN BY: J. G. /G. C. | SCALE: AS SHOWN

ROOF PLAN

PROJ. NO. 7749-02 | SHEET NO. 58 OF 62

A.F. 7145

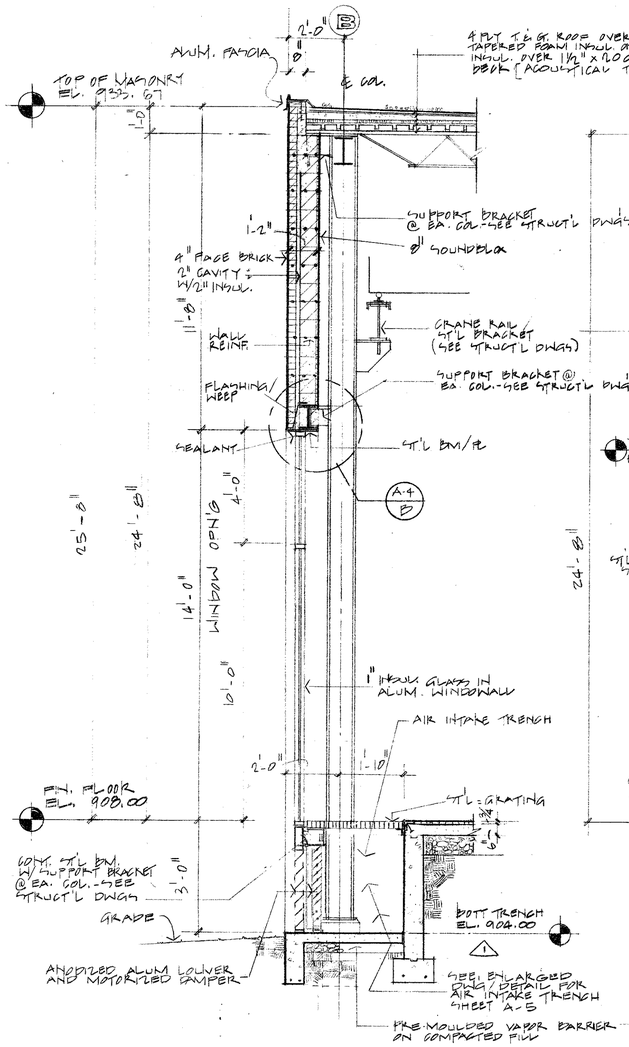

SECTION
3/8" = 1'-0"
A-7 / A21

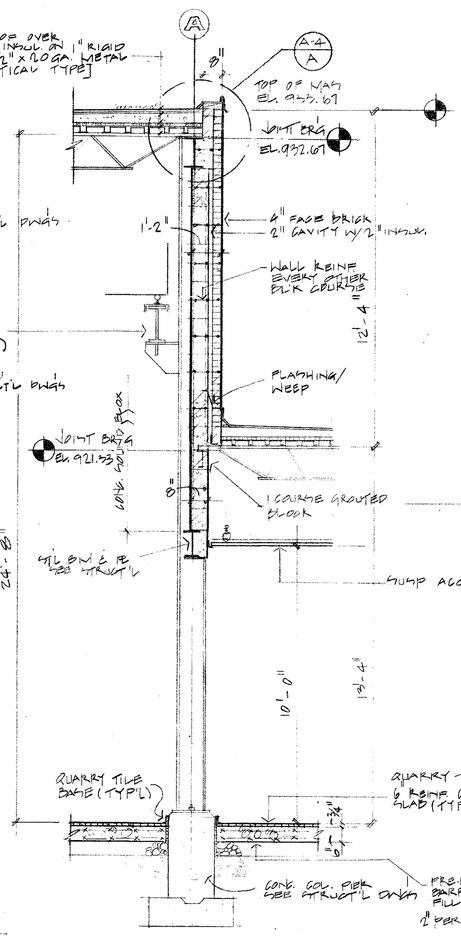

SECTION
3/8" = 1'-0"
A-7 / A32

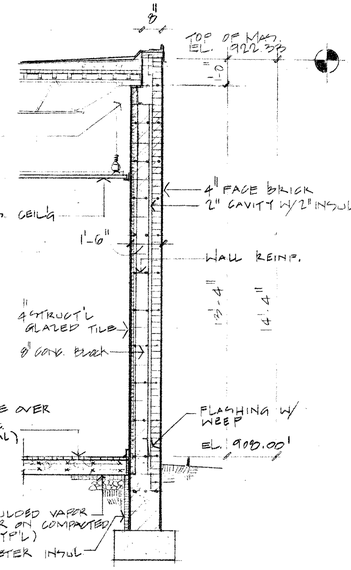

SECTION
3/8" = 1'-0"
A-7 / A33

GENERAL NOTE:
FOR FOOTING SIZE AND DEPTH REFER TO STRUCTURAL DWGS

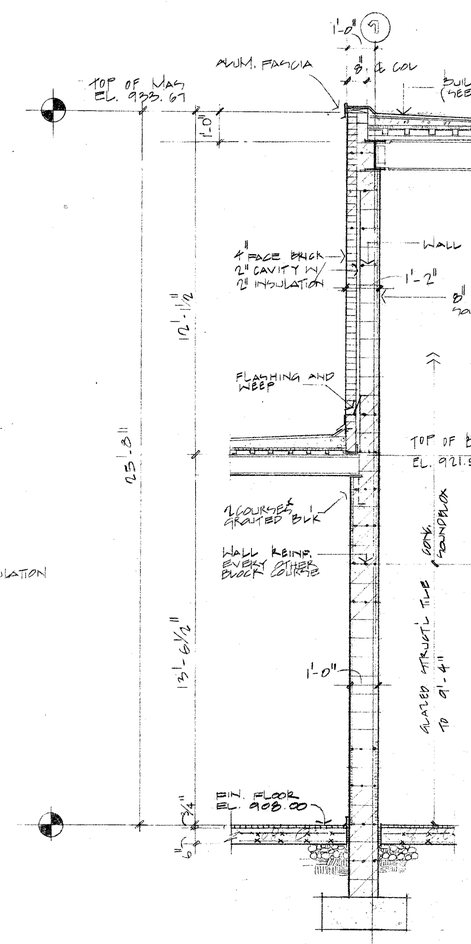

SECTION
3/8" = 1'-0"
A-7 / A34

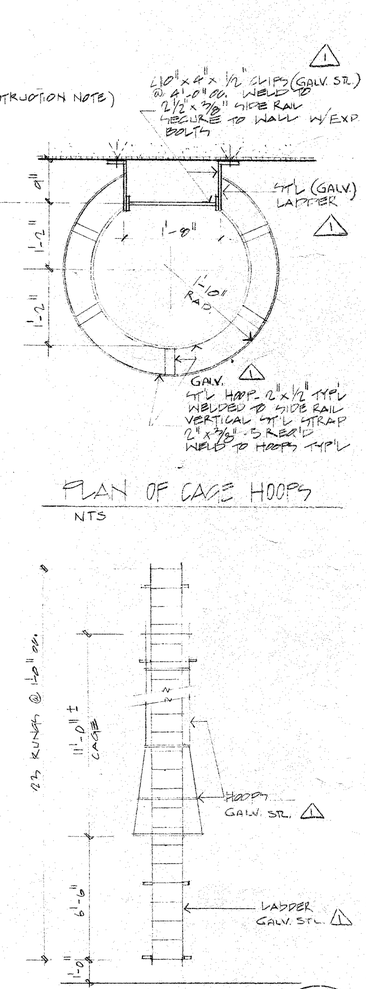

LADDER DETAIL — ELEVATION
A-7 / A-1 A
1
¼" = 1'-0"

AS BUILT 8/16/82

A-7

NO.	DESCRIPTION	BY	FIRM	DATE	BY	DATE
	REVISIONS	SUBMITTAL			BUREAU OF WATER APPROVAL	
1	PRE-BID REVISIONS		MMI	7/79		

CONSULTING ENGINEERS
SUBMITTED BY:
REG. ENGR. GA. NO. 33334 DATE FEB. 1979
MADISON · MADISON · INTERNATIONAL / FLOOD & ASSOCIATES, INC.

CITY OF ATLANTA
BUREAU OF WATER
T. E. STALLWORTH, JR., DIRECTOR
APPROVED BY:
DATE: 3-15-79

CITY OF ATLANTA, GEORGIA
DEPARTMENT OF ENVIRONMENT & STREETS BUREAU OF WATER
WATER IMPROVEMENT PROGRAM
EAST SIDE HARTSFIELD INTERNATIONAL AIRPORT
WATER STORAGE AND PUMPING STATION

MADISON · MADISON · INTERNATIONAL / FLOOD & ASSOCIATES, INC.
CONSULTING ENGINEERING
Joint Venture
ATLANTA, GEORGIA

DESIGNED BY: J.L. CHECKED BY: W.M. DATE: AUG. 1979
DRAWN BY: J.G./G.C. SCALE AS SHOWN

WALL SECTIONS

PROJ. NO. 7749-02 SHEET NO. 59 OF 62

AF 7145

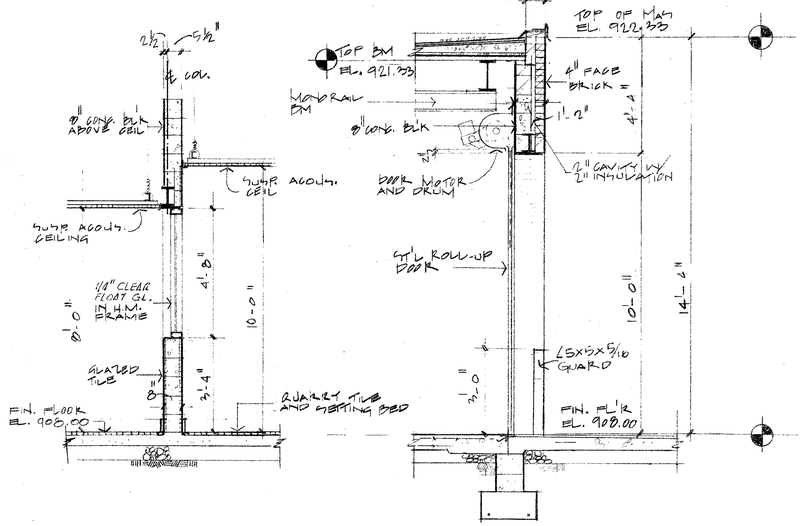

SECTION
3/8" = 1'-0"
A-8 / A15

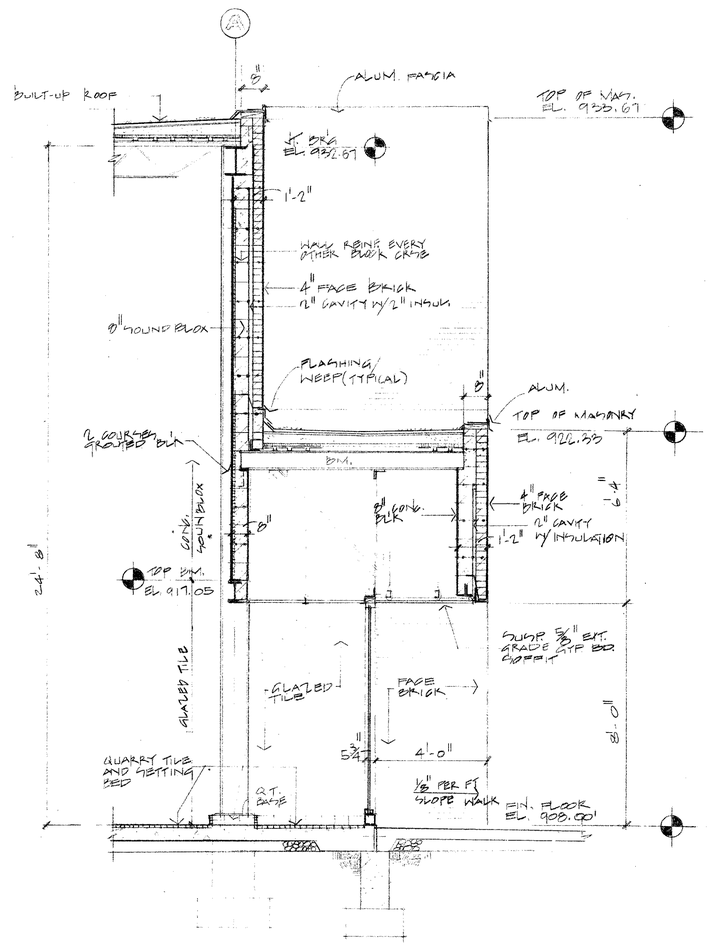

SECTION
3/8" = 1'-0"
A-8 / A36

SECTION
3/8" = 1'-0"
A-8 / A38

GENERAL NOTE:
FOR FOOTING SIZE AND DEPTH REFER TO STRUCTURAL DWGS.

AS BUILT 8|16|82

A-8

NO.	DESCRIPTION	BY	FIRM	DATE	BY	DATE
	REVISIONS	SUBMITTAL			BUREAU OF WATER APPROVAL	
1	PRE-BID REVISIONS		MMI			

CONSULTING ENGINEERS
SUBMITTED BY:
REG. ENGR. GA. NO. 3334 DATE FEB. 1979
MADISON · MADISON · INTERNATIONAL / FLOOD & ASSOCIATES, INC.

CITY OF ATLANTA
BUREAU OF WATER
T.E. STALLWORTH, JR., DIRECTOR
APPROVED BY:
DATE: 3-15-79

CITY OF ATLANTA, GEORGIA
DEPARTMENT OF ENVIRONMENT & STREETS BUREAU OF WATER
WATER IMPROVEMENT PROGRAM
EAST SIDE HARTSFIELD INTERNATIONAL AIRPORT
WATER STORAGE AND PUMPING STATION

MADISON · MADISON · INTERNATIONAL / FLOOD & ASSOCIATES, INC.
CONSULTING ENGINEERING
Joint Venture
ATLANTA, GEORGIA

DESIGNED BY: J.G. | CHECKED BY: W.M. | DATE: AUG. 1979
DRAWN BY: J.G. / P.B. | SCALE: 3/8" = 1'-0"

WALL SECTIONS

PROJ. NO. 7749-02
SHEET NO. 60 OF 62

AF 7145

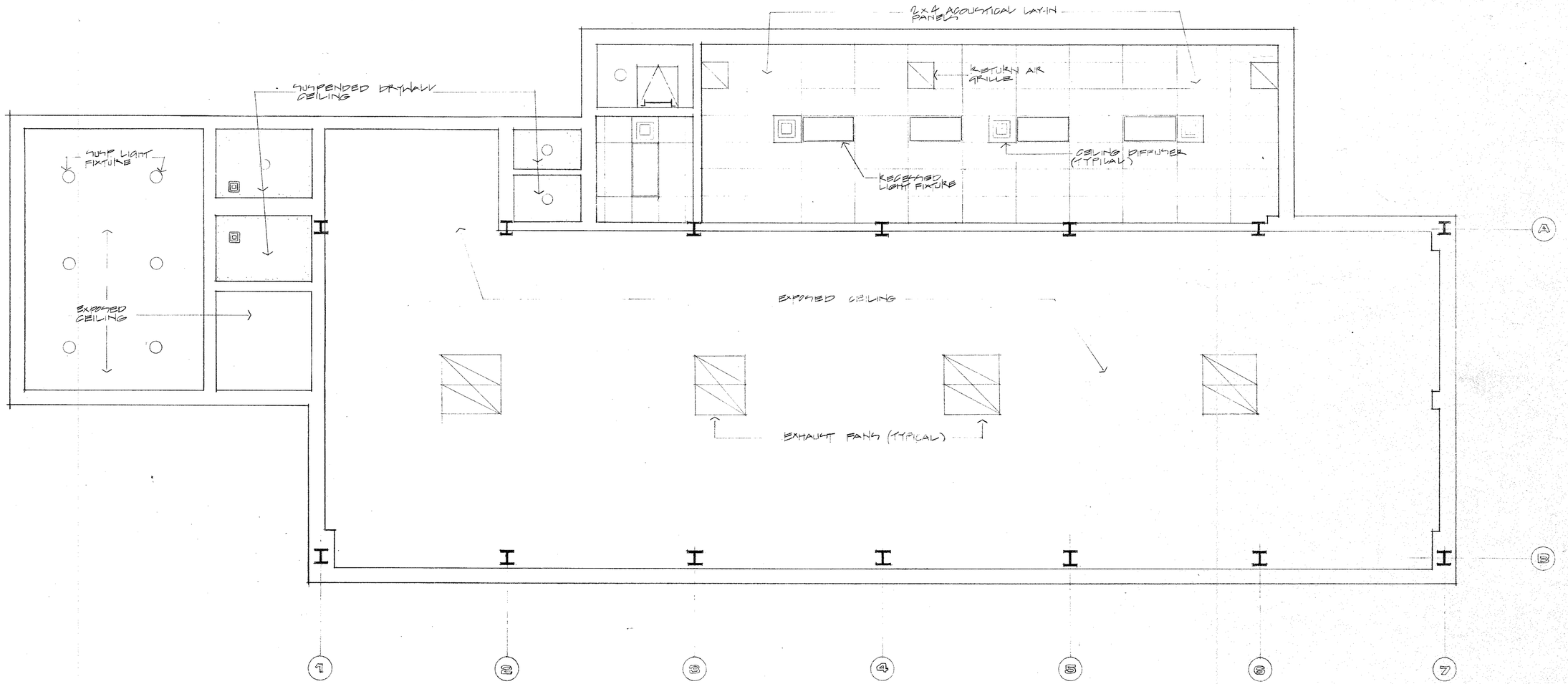

AS BUILT 8/16/82

A-9

NO.	DESCRIPTION	BY	FIRM	DATE	BY	DATE
	REVISIONS	SUBMITTAL			BUREAU OF WATER APPROVAL	

CONSULTING ENGINEERS
SUBMITTED BY:
REG. ENGR. GA. NO. 33334 DATE FEB 1979
MADISON · MADISON · INTERNATIONAL / FLOOD & ASSOCIATES, INC.

CITY OF ATLANTA
BUREAU OF WATER
T. E. STALLWORTH, JR., DIRECTOR
APPROVED BY:
DATE: 3-13-79

CITY OF ATLANTA, GEORGIA
DEPARTMENT OF ENVIRONMENT & STREETS BUREAU OF WATER
WATER IMPROVEMENT PROGRAM
EAST SIDE HARTSFIELD INTERNATIONAL AIRPORT
WATER STORAGE AND PUMPING STATION

MADISON · MADISON · INTERNATIONAL / FLOOD & ASSOCIATES, INC.
CONSULTING ENGINEERING
Joint Venture
ATLANTA, GEORGIA

DESIGNED BY: J. L. | CHECKED BY: W. M. | DATE: AUG. 1979
DRAWN BY: J. G. | SCALE: 1/4" = 1'-0"

REFLECTED CEILING PLAN

PROJ. NO. 7749-02 | SHEET NO. 61 OF 62

AF 7145

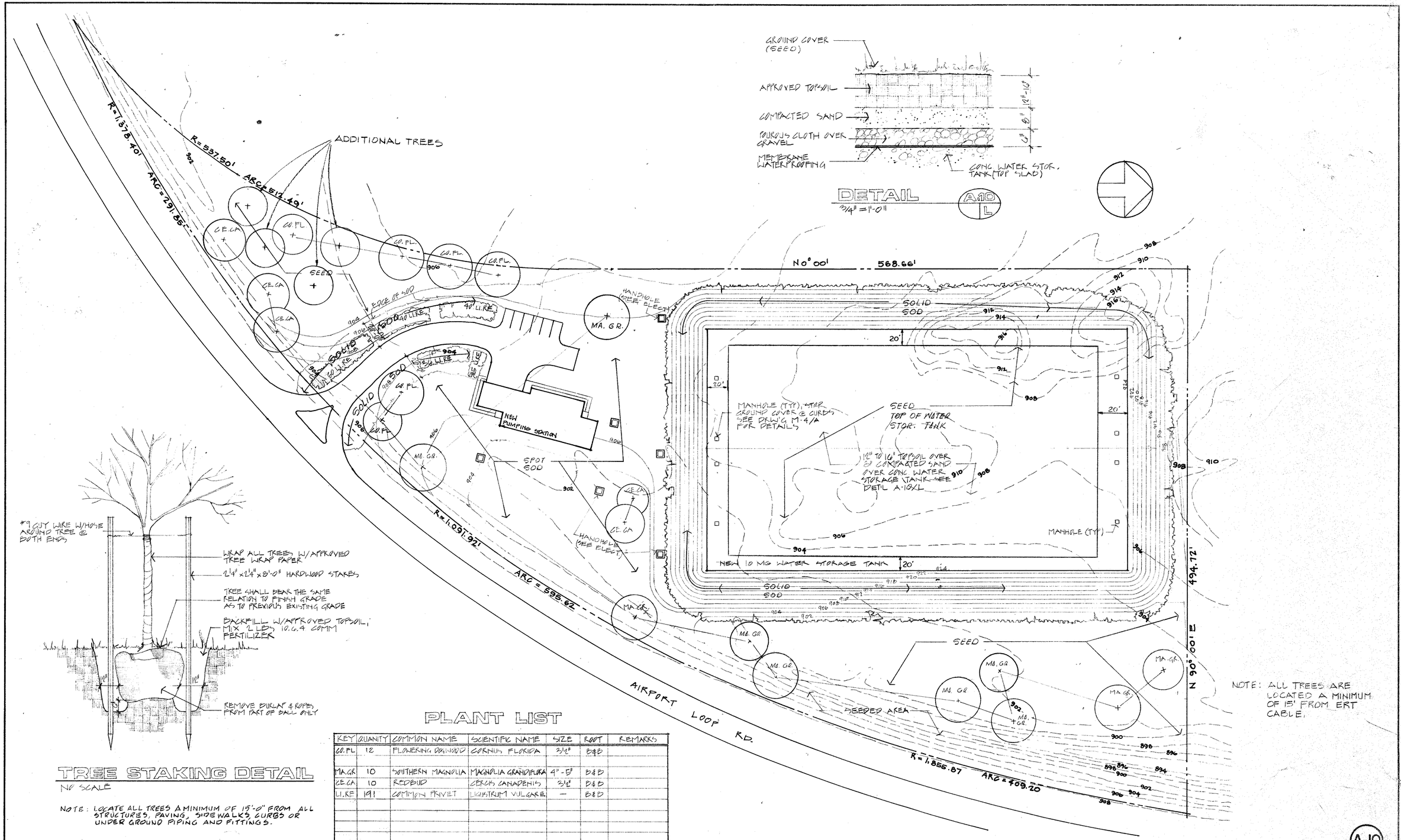

DETAIL A-10/L
3/4" = 1'-0"

TREE STAKING DETAIL

NO SCALE

NOTE: LOCATE ALL TREES A MINIMUM OF 15'-0" FROM ALL STRUCTURES, PAVING, SIDEWALKS, CURBS OR UNDER GROUND PIPING AND FITTINGS.

PLANT LIST

KEY	QUANITY	COMMON NAME	SCIENTIFIC NAME	SIZE	ROOT	REMARKS
CO.FL	12	FLOWERING DOGWOOD	CORNUS FLORIDA	2½"	B&B	
MA.GR	10	SOUTHERN MAGNOLIA	MAGNOLIA GRANDIFLORA	4'-5'	B&B	
CE.CA	10	REDBUD	CERCIS CANADENSIS	2½"	B&B	
LI.RE	191	COMMON PRIVET	LIGUSTRUM VULGARE	—	B&B	

NOTE: ALL TREES ARE LOCATED A MINIMUM OF 15' FROM ERT CABLE.

AS BUILT 8/16/82

A-10

NO.	DESCRIPTION	BY	FIRM	DATE	BY	DATE
	REVISIONS	SUBMITTAL			BUREAU OF WATER APPROVAL	

CONSULTING ENGINEERS
SUBMITTED BY:
REG. ENGR. GA. NO. 9334 DATE FEB. 1979
MADISON · MADISON · INTERNATIONAL / FLOOD & ASSOCIATES, INC.

CITY OF ATLANTA
BUREAU OF WATER
T. E. STALLWORTH, JR., DIRECTOR
APPROVED BY:
DATE: 3-15-79

CITY OF ATLANTA, GEORGIA

DEPARTMENT OF ENVIRONMENT & STREETS BUREAU OF WATER

WATER IMPROVEMENT PROGRAM

EAST SIDE HARTSFIELD INTERNATIONAL AIRPORT
WATER STORAGE AND PUMPING STATION

MADISON · MADISON · INTERNATIONAL / FLOOD & ASSOCIATES, INC.
CONSULTING ENGINEERING
Joint Venture
ATLANTA, GEORGIA

DESIGNED BY: J. L. CHECKED BY: J. G. DATE: AUG. 1979
DRAWN BY: C. H. SCALE 1" = 40'

SITE PLANTING PLAN

PROJ. NO: 7749-02 SHEET NO. 62 OF 62

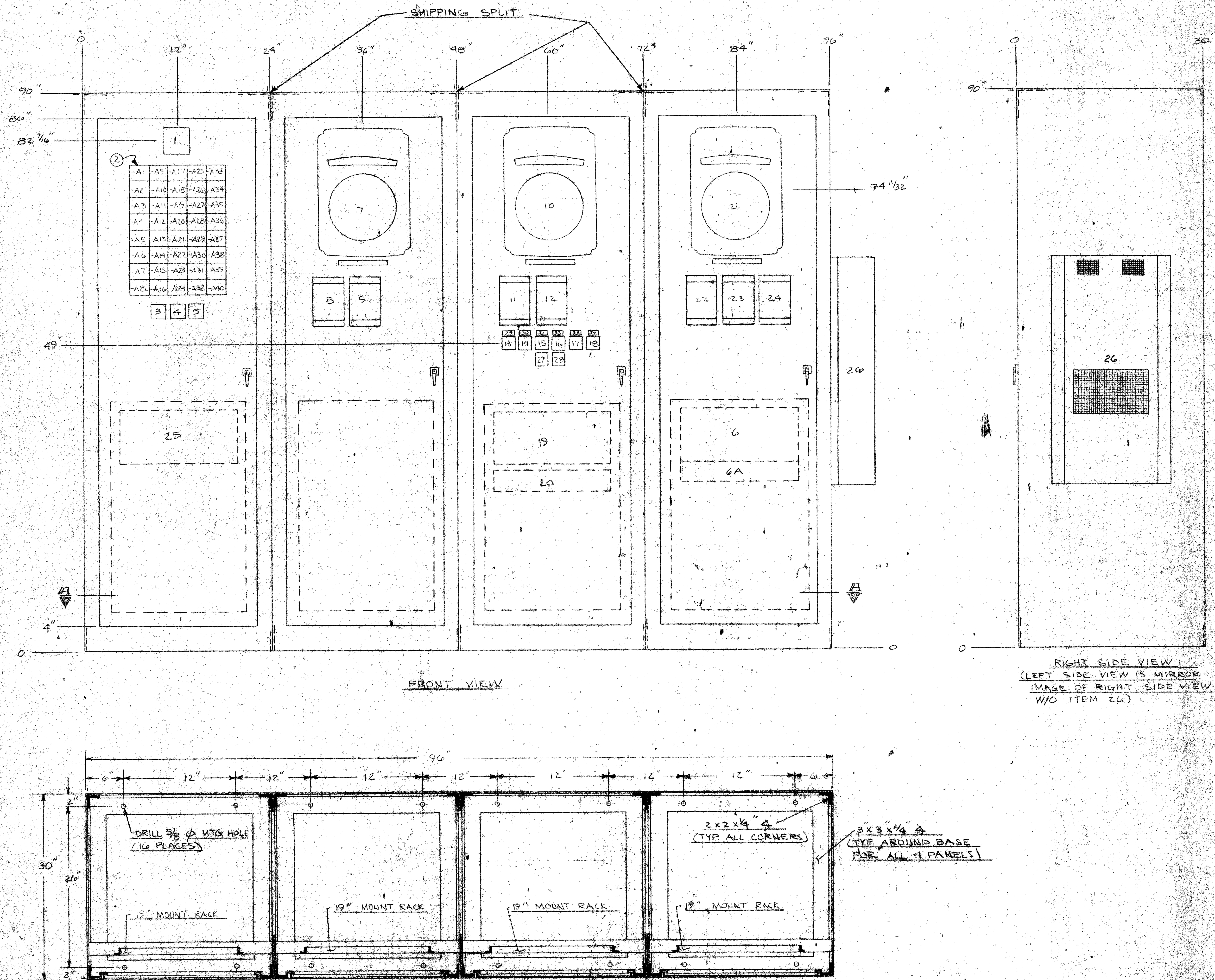

NOTE(S):
1) SEE GENERAL NOTES LOCATED ON DWG C-79087-27

REV	DATE	DESCRIPTION	COORD.	BY
3	5-11-81	AS INSTALLED - NO CHANGE (5-1-81)		JG/MJ
2	11-18-80	AS SHIPPED - NO CHANGE (11-3-80)		JG/BE
1	9-9-80	CHG. ITEM #2 FROM A SERIES TO A SERIES 80 (5-2-80)		RV
		REV. PER ENG. DRAWINGS (4/9/80)		
0		FIRST ISSUE		RV

This drawing shall not be reproduced or copied without written consent of The Turbitrol Company

DO NOT SCALE DRAWING

	NAME	SIGNATURE	DATE
DRAWN BY	R.J. VAUGHN	R.J. Vaughn	3/4/80
DFTG. APVL.	FIRMIN		3-12-80
DESIGNED BY	R.J. VAUGHN	R.J. Vaughn	3/4/80
PROJECT ENG.	GOLDMAN		3/12/80
PROJECT MGR.	R. GLASS		3/12/80

SCALE N.T.S.

CONTRACTOR C.C.C. ELECTRICAL, INC

CONSULTING ENGINEER MADISON-MADISON INTERNATL FLOOD & ASSOC.

PROJECT-LOCATION EAST HARTSFIED INTERNATL AIRPORT WATER STORAGE & PUMPING STATION ATLANTA, GA

PROJECT No. 7911087

THE Turbitrol COMPANY
ATLANTA, GEORGIA

TITLE INSTRUM... PAN...

REV. NO. 0 1 2 3

No C-

ITEM	MARK #	DESIGN #	MANUFACTURER	DESCRIPTION	RANGE	DETAIL	LEGEND	SERIAL #
1	2-17	H-11-1	PANATONE, PD	ANNUNCIATOR HORN				
2		LB11-1	PANALARM, SERIES 80	ANNUNCIATOR				
2-A1				WINDOW			DISCHARGE PRESSURE HIGH	
-A2							LOW	
-A3							PUMP #1 LOW DISCHARGE PRESSURE	
-A4							#2	
-A5							#3	
-A6							#4	
-A7							PUMP #1 LOSS OF PRIME	
-A8							#2	
-A9							#3	
-A10							#4	
-A11							VACUUM PRIME SYSTEM-ALARM	
-A12							VALVE ACTIVATING SYSTEM-LOW PRESS	
-A13							PUMP #1 EMERGENCY SHUTDOWN	
A14							#2	
-A15							#3	
-A16							#4	
-A17							PUMP #1 HIGH TEMPERATURE ALARM	
-A18							#2	
-A19							#3	
-A20							#4	
-A21							STORAGE TANK #1 HIGH CAPACITY	
-A22							#1 LOW	
-A23							#2 HIGH	
-A24							#2 LOW	
-A25							STORAGE TANKS TOTAL LOW	
-A26							FIRE ALARM	
-A27							POWER FAILURE - LINE #1	
-A28							#2	
-A29							EMERGENCY TIE BREAKER - CLOSED	
-A30							INSTRUMENT PANEL EMERGENCY POWER-ON	
-A31							REMOTE TERMINAL UNIT FAILURE	
-A32							(SPARE)	
-A33							PUMP NO.1 CHECK VALVE FAILURE	
-A34							PUMP NO.2	
-A35							PUMP NO.3	
-A36							PUMP NO.4	
-A37							(SPARE)	
-A38								
-A39								
-A40								
3	2-35		MICRO SWITCH, PT	PUSHBUTTON			TEST	
4	2-38			SELECTOR SWITCH			HORN ENABLE	
5	2-36			PUSHBUTTON			ACKNOWLEDGE	
6	2-18	UPS-1	TOPAZ, 1000	UNINTERUPTIBLE POWER SYSTEM	1000 VA		BACKUP POWER SUPPLY	
6A			2566-2	MAINTENANCE-FREE BATTERY	140 MIN			
7	2-10	FR-3	BIF 259-21	INDICATOR/RECORDER	0-50 MGD		STATION TOTAL FLOW	
8	2-9	FI-1	253-06	FLOW INDICATOR	0-25 MGD		NORTH SYSTEM FLOW	
9	2-9	FI-2			0-25 MGD		SOUTH	
10	2-7	LR-3	259-21	INDICATOR/RECORDER	0-10 MG		TOTAL STORAGE TANK LEVEL	
11	2-5	LI-1	253-06	LEVEL INDICATOR	0-5 MG		STORAGE TANK #1 LEVEL	
12	2-6	LI-2			0-5 MG		#2	
13	2-33	VC-1	MICRO SWITCH, CMC	PUSHBUTTON/SELECTOR SWITCH		A	V.C. NO.1	
14		VC-2					2	
15		VC-3					3	
16		VC-4					4	
17		VC-8					8	
18		VC-9					9	
19	2-15	VSP5	BAILEY 707	CONTROLLER			NORTH SYSTEM DISCHARGE	
		VSP6					AIRPORT	
		VSP7					SOUTH	
20		PA10-1	SHURE M-67	PA SYSTEM				
21	2-4	PR-4	BIF 259-21	INDICATOR/RECORDER	0-200 PSI		PUMP DISCHARGE PRESSURE	
22	2-1	PI-1	253-06	PRESSURE INDICATOR	0-200 PSI		NORTH SYSTEM PRESSURE	
23	2-2	PI-2					SOUTH	
24	2-3	PI-3					AIRPORT	
25	SA-1	RTU	TURBITROL 1679/1	REMOTE TERMINAL UNIT				
26	2-19		McLEAN, HP-3600	HEAT EXCHANGER				
27	2-34	VC-3	MICRO-SWITCH, CMC	SELECTOR SWITCH		B	V.C. NO.3	
28		VC-4					V.C. NO.4	
29				NAMEPLATE			TANK NO.1 FILL LINE VALVE	
30							2	
31							1 DISCHARGE	
32							2	
33							1 ALTITUDE	
34							2 1	

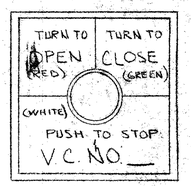

DETAIL A
(SCALE: FULL)

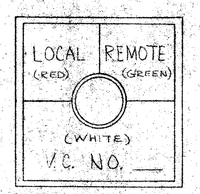

DETAIL B
(SCALE: FULL)

GENERAL NOTES:

1) CONSTRUCTED OF 11 GA. H.R.P.&O. STEEL. ALL SEAM WELDED AND GROUND SMOOTH.
2) DOORS HAVE HIDDEN HINGES AND THREE POINT LATCH SYSTEM W/ KEY LOCK HANDLE.
3) FINISH:
   A) PRIME ONE COAT OF CHLORINATED RUBBER, (SHERWIN WILLIAMS "KEM KROMIK" # B50NZ OR EQUAL), COLOR, RED OXIDE.
   B) PRIME EXTERIOR ONE COAT OR AS MANY AS REQUIRED TO MAKE SMOOTH AND BLEMISH FREE FOR PAINTING, POLYURETHANE SANDING PRIMER, (SHERWIN WILLIAMS "SPEED FILL" # D-61A23 OR EQUAL), COLOR, LIGHT GRAY.
   C) PAINT INTERIOR ONE COAT, EXTERIOR TWO COATS OF CATALYZED POLYURETHANE ENAMEL, (SHERWIN WILLIAMS "POLANE" CATALYZED W/ "B" # V66VZ7 CATALYST OR EQUAL).
      INTERIOR COLOR - WHITE
      EXTERIOR COLOR - ASA NO. 61 GRAY # F63A31

REV	DATE	DESCRIPTION	COORD	BY
		[redacted]	G6	JG 10/1
2	10-9-80	ADDED EXTERIOR COLOR (2-14-80 ltr)		JG 10/16
1	10-9-80	REV PER ENG. DRAWING (8/1/80)		RF
0		FIRST ISSUE		RF

This drawing shall not be reproduced or copied without written consent of The Turbitrol Company

DO NOT SCALE DRAWING

	NAME	SIGNATURE	DATE
DRAWN BY	R.J. VAUGHN	R.J. Vaughn	3/4/80
DTG. APVL.	FIRMIN	[illegible]	3-12-80
DESIGNED BY	R.J. VAUGHN	R.J. Vaughn	3/4/80
PROJECT ENG.	GOLDMAN	[illegible]	3/12/80
PROJECT MGR.	R. GLASS	[illegible]	3/12/80

SCALE

CONTRACTOR
C.C.C. ELECTRIC, INC.

CONSULTING ENGINEER
MADISON-MADISON INTERNAT'L, FLOOD & ASSOC.

PROJECT-LOCATION
EAST HARTSFIELD INTERNAT'L AIRPORT WATER STORAGE & PUMPING STATION
ATLANTA, GA

PROJECT No 7911087

THE Turbitrol COMPANY
A DIVISION OF THE FAILMAN COMPANY
ATLANTA, GEORGIA

TITLE
INSTRUMENT LIST

REV NO: 0 1 2 3

No C- 79087-27016 -M2

FORM 3E 750611-1
REV. 1

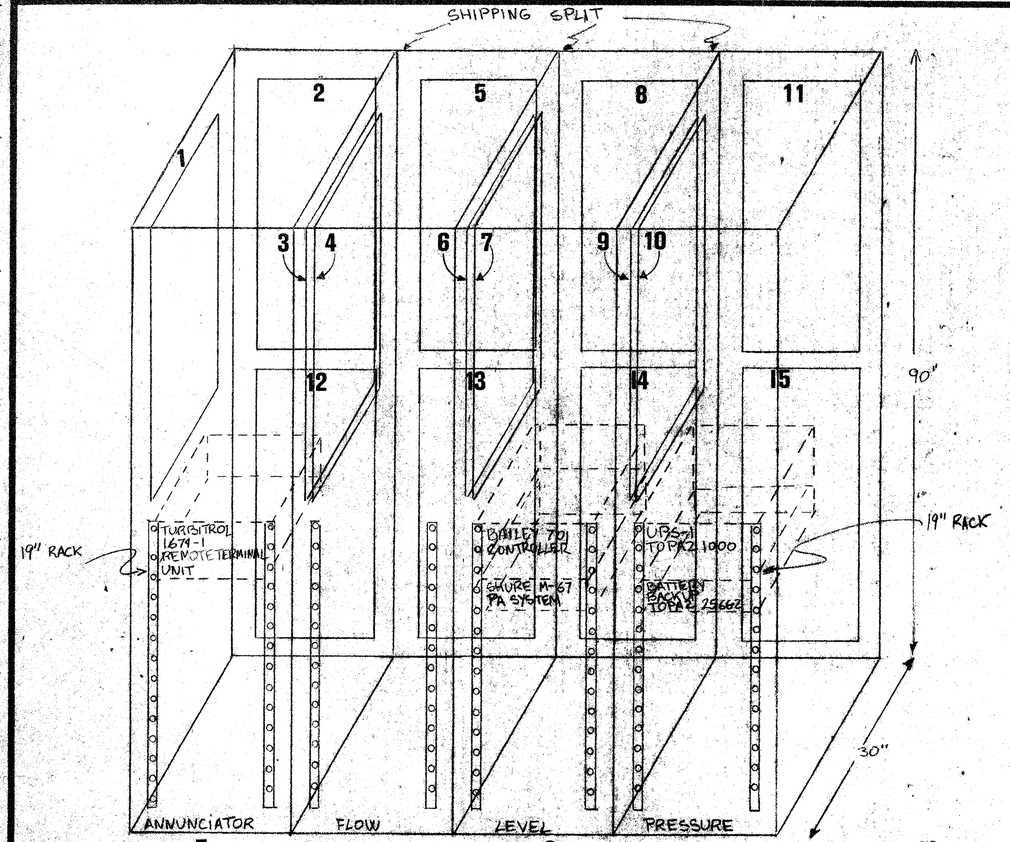

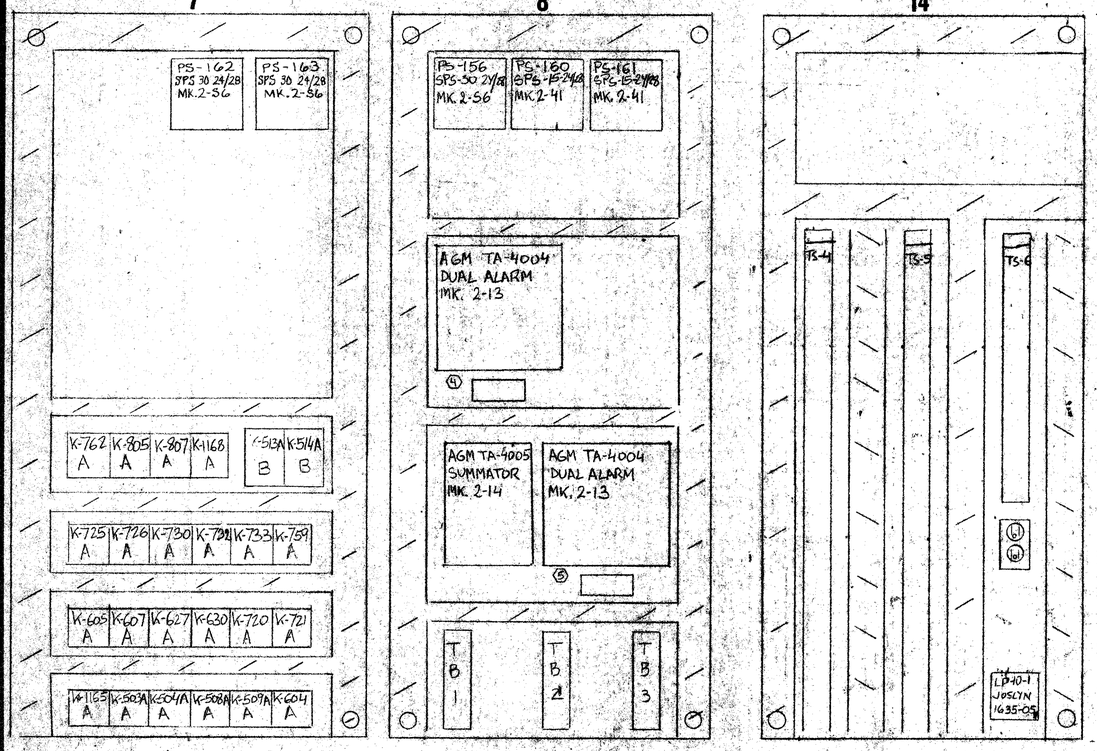

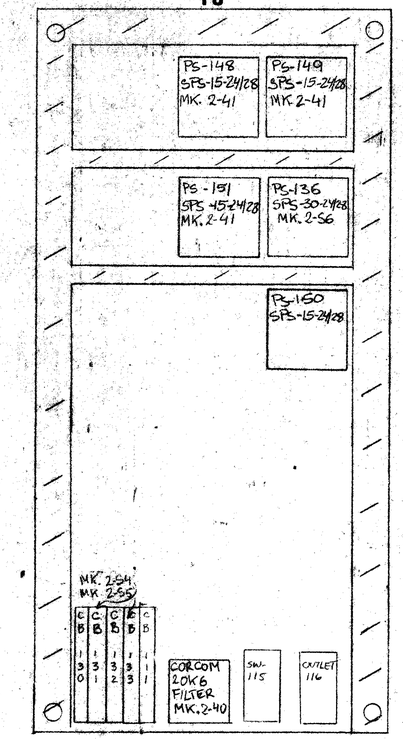

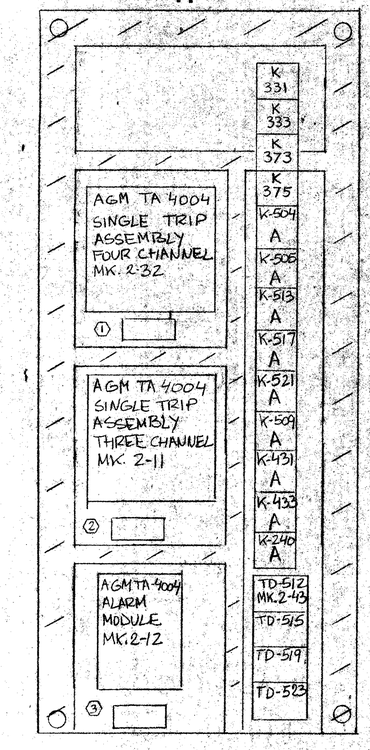

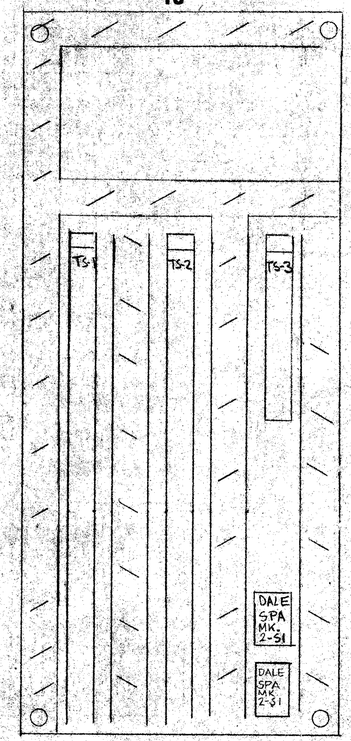

TS-1	TS-2	TS-3
L	310	SPARE
N	311	
G	312	
319	316	
320	317	
321	318	
334	325	
335	326	
336	327	
419	331	
420	332	
421	333	
SPARE	410	
	411	
	412	
	416	
	417	
	418	
	425	
	426	
	427	
	SPARE	

TS-4	TS-5	TS-6
552	728	535	1154
553	729	536	1155
557	730	537	1156
558	731	638	1157
562	732	639	1158
563	733	640	1159
567	734		1160
568	735		1161
610	810		
611	811		
612	812		
613	813		
614	814		
615	815		
616	816		
617	817		
618	817		
623			
624			
625			
626			
627			
628			
629			
630			
715			
716			
717			
718			
719			
720			
721			
722			
723			

① LEGEND PLATE
- SC2-2 PUMP NO.1 DISCH. PRESS.
- SC2-3 PUMP NO.2 DISCH. PRESS.
- SC2-4 PUMP NO.3 DISCH. PRESS.
- SC2-5 PUMP NO.4 DISCH. PRESS.

② LEGEND PLATE
- SC1-1 VC-5 CLOSE SET POINT
- SC1-2 VC-7 CLOSE SET POINT
- SC1-3 VC-6 CLOSE SET POINT

③ LEGEND PLATE — SC2-1 DISCHARGE PRESSURE LOW/HIGH

④ LEGEND PLATE
- SC3A-2 TANK 1 LOW/HIGH ALARM
- SC3A-3 TANK 1 LOW/HIGH CUTOFF

⑤ LEGEND PLATE
- SC4A-1 TANK 2 LOW/HIGH ALARM
- SC4A-2 TANK 2 LOW/HIGH CUTOFF

REV	DATE	DESCRIPTION	COORD	BY
2	5-11-81	AS INSTALLED- NO CHANGE		
1	11-18-80	AS SHIPPED- REVISED SUB-PANELS, NO. 8 AND 10. 11-3-80		
0	10-10-80	FIRST ISSUE		

This drawing shall not be reproduced or copied without written consent of The Turbitrol Company

DO NOT SCALE DRAWING

	NAME	SIGNATURE	DATE
DRAWN BY	SEGURA		6-5-80
DFTG. APVL.			
DESIGNED BY	SEGURA		6-5-80
PROJECT ENG.	GOLDMAN		6-19-80
PROJECT MGR.	GLASS		6-25-80

SCALE

CONTRACTOR C. C. C. ELECTRIC INC

CONSULTING ENGINEER MADISON, MADISON INT'L FLOOD AND ASSOCIATES

PROJECT-LOCATION EAST HARTSFIELD INT'L AIRPORT, WATER STORAGE AND PUMPING STATION ATLANTA, GA

PROJECT No 7911087

THE Turbitrol® COMPANY — DIVISION OF THE TRIPLEX COMPANY — ATLANTA, GEORGIA

TITLE: INSTRUMENT PANEL

REV. NO. 0 1 2

No C-79087-Z7016-MA1

FORM 3E 75061I-1 REV 1

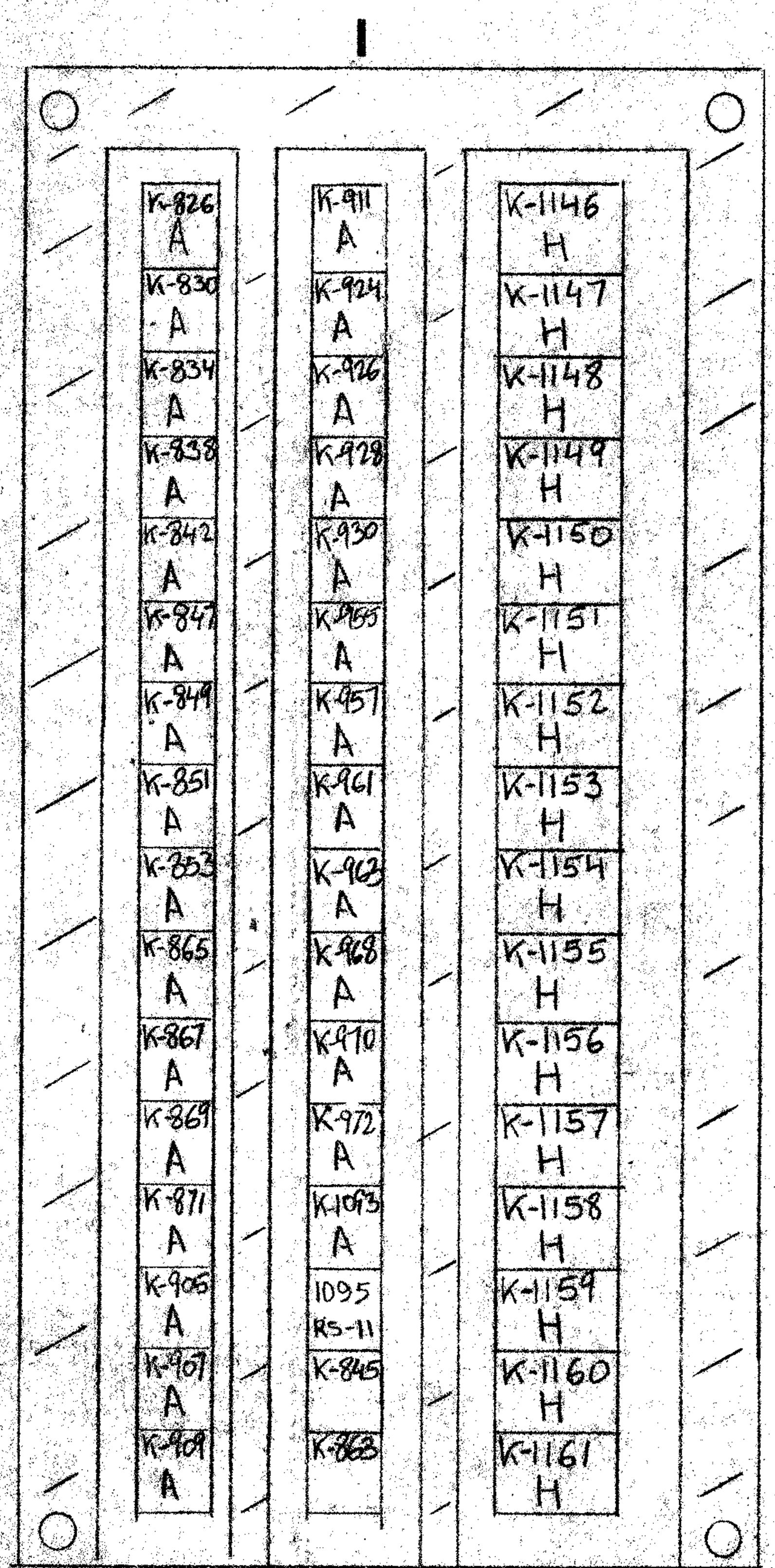

TS-7	TS-8	TS-9		TS-10		TS-11
1010	SPARE	824	852	910	946	934
1011		825	853	911	947	935
1012		826	854	912	948	936
1016		827	855	913	949	937
1017		828	856	914	950	938
1018		829	857	915	951	939
		830	858	916	952	
		831	859	917	953	
		832	860	918	954	
		833	861	919	955	
		834	810	920	956	
		835	811	921	957	
		836	812	922		
		837	813	923		
		838	814	924		
		839	815	925		
		840	816	926		
		841	817	927		
		842		928		
		843		929		
		844		930		
		845		931		
		846		932		
		847		933		
		848		940		
		849		941		
		850		942		
		851		943		
				944		
				945		

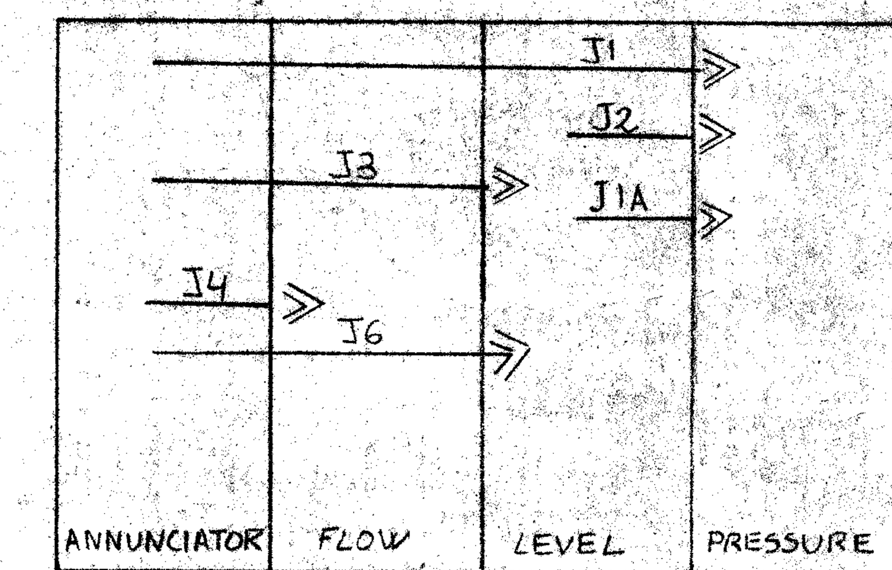

BURNDY CONNECTOR SCHEDULE (SMS-36)

REV	DATE	DESCRIPTION	COORD	BY
3	5-11-81	AS INSTALLED - NO CHANGE		
2	11-18-80	AS SHIPPED - REVISED PANELS 1,2,3 - REVISED JIA. (11-3-80)		
1	9-18-80	ADDED ISOLATOR BOARDS		JS
0	9-10-80	FIRST ISSUE		JS

This drawing shall not be reproduced or copied without written consent of The Turbitrol Company

DO NOT SCALE DRAWING

	NAME	SIGNATURE	DATE
DRAWN BY	SEGURA		6-5-80
DFTG. APVL.			
DESIGNED BY	SEGURA		6-5-80
PROJECT ENG.	GOODMAN		6-5-80
PROJECT MGR.	GLASS		6-25-80

SCALE 1/4" = 1"

CONTRACTOR: CCC ELECTRIC INC.

CONSULTING ENGINEER: MADISON, MADISON INT'L FLOOD AND ASSOCIATES

PROJECT-LOCATION: EAST HARTSFIELD INT'L AIRPORT WATER STORAGE AND PUMPING STATION ATLANTA GA

PROJECT No. 7911087

THE Turbitrol COMPANY, ATLANTA, GEORGIA

TITLE: INSTRUMENT PANEL

REV. NO. 0 1 2 3

No. C-79087-27016-MA2

FORM 3E 75061I-1