POLK
COUNTY

POLK COUNTY
LAKELAND, FL

GIBSON OAKS WATER PRODUCTION FACILITY

TECHNICAL SPECIFICATIONS

BID SET

VOLUME 2 of 2

JULY 2020

PCU PROJECT No. 2014-4-30-0
ORACLE No. 6857014

carollo®
CA No. 8571

CIVILSURV
A Tradition of Innovative Engineering

CivilSurv Design Group, Inc.
2525 Drane Field Rd.
Suite 7
Lakeland, FL 33811
Tel: 863-646-4771

Certificate of
Authorization
No. 28988

WMB
{ARCHITECTURE}
ROI SOLUTIONS.

110 South Kentucky Ave.
Lakeland, Florida 33801
863.687.3573
wmb-roi.com
Corp Lic. No
AAC001165

POLK COUNTY

GIBSON OAKS WATER PRODUCTION FACILITY TECHNICAL SPECIFICATIONS

BID SET FINAL

JULY 2020

Digitally signed by Dwayne R. Kreidler
Date: 2020.07.15 23:09:42-04'00'

No 54579
STATE OF FLORIDA
PROFESSIONAL ENGINEER

Dwayne R. Kreidler
PE No. 54579

CA 8571
Carollo Engineers, Inc.
200 East Robinson Street, Ste. 1400
Orlando, FL 32801
P: 407-478-4642

Printed copies of this document are not considered signed and sealed and the signature must be verified on any electronic copies.

Digitally signed by Norman Anderson
Contact Info: Carollo Engineers, Inc.
Date: 2020.07.20 17:00:01-04'00'

NORMAN E. ANDERSON
LICENSE
No 71642
STATE OF FLORIDA
PROFESSIONAL ENGINEER

Norman E. Anderson
PE No. 71643

CA 8571
Carollo Engineers, Inc.
200 East Robinson Street, Ste. 1400
Orlando, FL 32801
P: 407-478-4642

Printed copies of this document are not considered signed and sealed and the signature must be verified on any electronic copies.

Digitally signed by Richard C Warner
Contact Info: Carollo Engineers, Inc.
Date: 2020.07.16 14:23:02-04'00'

Richard C. Warner

RICHARD C. WARNER
LICENSE
No 79572
STATE OF FLORIDA
PROFESSIONAL ENGINEER

Richard C. Warner
PE No. 79572

CA 8571
Carollo Engineers, Inc.
200 East Robinson Street, Ste. 1400
Orlando, FL 32801
P: 407-478-4642

Printed copies of this document are not considered signed and sealed and the signature must be verified on any electronic copies.

POLK COUNTY

GIBSON OAKS WATER PRODUCTION FACILITY TECHNICAL SPECIFICATIONS

BID SET

JULY 2020

J. Michael Murphey
FL PA AR0009346

Architectural Firm
CA # AAC001165
110 South Kentucky Avenue, Lakeland Fl. 33801
P: 863-687-3573

[PLACE SEAL HERE.]

STATE OF FLORIDA
J. MICHAEL MURPHEY
AR9346
REGISTERED ARCHITECT

This item has been electronically signed and sealed by J. MICHAEL MURPHEY using a Digital Signature. Printed copies of this document are not considered signed and sealed and the signature must be verified on any electronic copies.

Digitally signed by J. Michael Murphey
Date: 2020.07.14 12:15:19 -04'00'

Responsible for: Divisions 06, 07, 08, 09, 10, and Sections 06100, 06200, 06400, 07212, 07610, 07900, 08100, 08200, 08400, 08700, 08800, 09200, 09300, 09510, 09650, 09900, and 10800.

POLK COUNTY

GIBSON OAKS WATER PRODUCTION FACILITY

TABLE OF CONTENTS

VOLUME 1 OF 2

DIVISION 01 – GENERAL REQUIREMENTS

SECTION NO.	TITLE	RESPONSIBLE ENGINEER
01110	SUMMARY OF WORK	Dwayne Kreidler
01140	WORK RESTRICTIONS	Dwayne Kreidler
01201	MEASUREMENT AND PAYMENT	Dwayne Kreidler
01292	SCHEDULE OF VALUES	Dwayne Kreidler
01312	PROJECT MEETINGS	Dwayne Kreidler
01324C	PROGRESS SCHEDULES AND REPORTS	Dwayne Kreidler
01330	SUBMITTAL PROCEDURES	Dwayne Kreidler
01340	PHOTOGRAPHIC AND VIDEOGRAPHIC DOCUMENTATION	Dwayne Kreidler
01351	ENVIRONMENTAL PROCEDURES	Dwayne Kreidler
01355B	STORMWATER POLLUTION PREVENTION CONSTRUCTION ACTIVITY	Dwayne Kreidler
01424	ABBREVIATIONS AND ACRONYMS	Dwayne Kreidler
01450	QUALITY CONTROL	Dwayne Kreidler
01500	TEMPORARY FACILITIES AND CONTROLS	Dwayne Kreidler
01600	PRODUCT REQUIREMENTS	Dwayne Kreidler
01614	WIND DESIGN CRITERIA	Dwayne Kreidler
01756	COMMISSIONING	Dwayne Kreidler
01757	DISINFECTION	Dwayne Kreidler
01759	WATER LEAKAGE TEST FOR CONCRETE STRUCTURES	Dwayne Kreidler
01770	CLOSEOUT PROCEDURES	Dwayne Kreidler
01782	OPERATION AND MAINTENANCE DATA	Dwayne Kreidler
01783	WARRANTIES AND BONDS	Dwayne Kreidler

DIVISION 02 - SITE CONSTRUCTION

SECTION NO.	TITLE	RESPONSIBLE ENGINEER
02050	SOILS AND AGGREGATES FOR EARTHWORK	Dwayne Kreidler
02051	EQUIPMENT, PIPING, AND MATERIALS DEMOLITION	Dwayne Kreidler
02200	SITE CLEARING	Dwayne Kreidler
02224	PROTECTING EXISTING UNDERGROUND UTILITIES	Dwayne Kreidler
02240	DEWATERING	Dwayne Kreidler
02261	TEMPORARY EXCAVATION SUPPORT SYSTEMS	Dwayne Kreidler
02282	CONNECTIONS TO EXISTING BURIED PIPELINES	Dwayne Kreidler
02300	EARTHWORK	Dwayne Kreidler
02318	TRENCHING	Dwayne Kreidler
02362	TERMITE CONTROL	Dwayne Kreidler
02581	PRECAST ELECTRICAL HANDHOLES AND ELECTRICAL MAS	Dwayne Kreidler
02831	ENTRANCE/EXIT CONTROL EQUIPMENT	Dwayne Kreidler

DIVISION 03 - CONCRETE

SECTION NO.	TITLE	RESPONSIBLE ENGINEER
03071	EPOXIES	Rich Warner
03102	CONCRETE FORMWORK	Rich Warner
03150	CONCRETE ACCESSORIES	Rich Warner
03200	CONCRETE REINFORCING	Rich Warner
03300	CAST-IN-PLACE CONCRETE	Rich Warner
03366	TOOLED CONCRETE FINISHING	Rich Warner
03600	GROUTING	Rich Warner
03931	EPOXY INJECTION SYSTEM	Rich Warner

DIVISION 04 - MASONRY

SECTION NO.	TITLE	RESPONSIBLE ENGINEER
04090	MASONRY ACCESSORIES	Rich Warner
04100	MORTAR AND MASONRY GROUT	Rich Warner
04220	CONCRETE UNIT MASONRY	Rich Warner

DIVISION 05 - METALS

SECTION NO.	TITLE	RESPONSIBLE ENGINEER
05120	STRUCTURAL STEEL	Rich Warner
05190	MECHANICAL ANCHORING AND FASTENING TO CONCRETE AND MASONRY	Rich Warner
05500	METAL FABRICATIONS	Rich Warner

DIVISION 06 - WOOD AND PLASTICS

SECTION NO.	TITLE	RESPONSIBLE ENGINEER
06100	ROUGH CARPENTRY	J. Michael Murphey
06174	SHOP-FABRICATED WOOD TRUSSES	Rich Warner
06200	FINISH CARPENTRY	J. Michael Murphey
06400	ARCHITECTURAL WOOD CASEWORK	J. Michael Murphey
06608	FIBERGLASS REINFORCED PLASTIC	Rich Warner

DIVISION 07 - THERMAL AND MOISTURE PROTECTION

SECTION NO.	TITLE	RESPONSIBLE ENGINEER
07212	BATT INSULATION	J. Michael Murphey
07260	BELOW-GRADE VAPOR RETARDER MEMBRANE	J. Michael Murphey
07610	STANDING-SEAM METAL ROOF PANELS	J. Michael Murphey
07620	FLASHING AND SHEET METAL	J. Michael Murphey
07900.	JOINT SEALANTS	J. Michael Murphey

DIVISION 08 - DOORS AND WINDOWS

SECTION NO.	TITLE	RESPONSIBLE ENGINEER
08100	STEEL DOORS AND FRAMES	J. Michael Murphey
08200	FLUSH WOOD DOORS	J. Michael Murphey
08400	ALUMINUM ENTRANCES AND STOREFRONTS	J. Michael Murphey

08700	DOOR HARDWARE	J. Michael Murphey
08800	GLAZING	J. Michael Murphey

DIVISION 09 - FINISHES

SECTION NO.	TITLE	RESPONSIBLE ENGINEER
09200	GYPSUM BOARD ASSEMBLIES	J. Michael Murphey
09300	TILING	J. Michael Murphey
09510	ACOUSTICAL TILE CEILINGS	J. Michael Murphey
09650	RESILIENT BASE AND ACCESSORIES	J. Michael Murphey
09900	PAINTING AND COATING	J. Michael Murphey
09960	HIGH-PERFORMANCE COATINGS	Dwayne Kreidler

DIVISION 10 - SPECIALTIES

SECTION NO.	TITLE	RESPONSIBLE ENGINEER
10280	TOILET ACCESSORIES	J. Michael Murphey
10800	MISCELLANEOUS SPECIALTIES	J. Michael Murphey

DIVISION 11 - EQUIPMENT

SECTION NO.	TITLE	RESPONSIBLE ENGINEER
11242	PACKAGED CHEMICAL FEED SYSTEM	Dwayne Kreidler
11312H	AXIALLY-SPLIT CENTRIFUGAL PUMPS	Dwayne Kreidler
11313L	VERTICAL TURBINE DEEP WELL CENTRIFUGAL PUMPS	Dwayne Kreidler

DIVISION 13 - SPECIAL CONSTRUCTION

SECTION NO.	TITLE	RESPONSIBLE ENGINEER
13122	METAL BUILDING SYSTEM	Rich Warner
13207	WRAPPED PRESTRESSED CONCRETE TANKS	Dwayne Kreidler
13208	POLYETHYLENE TANKS	Dwayne Kreidler
13446	MANUAL ACTUATORS	Dwayne Kreidler

VOLUME 2 OF 2

DIVISION 15 - MECHANICAL

SECTION NO.	TITLE	RESPONSIBLE ENGINEER
15050	COMMON WORK RESULTS FOR MECHANICAL EQUIPMENT	Dwayne Kreidler
15052	COMMON WORK RESULTS FOR GENERAL PIPING	Dwayne Kreidler
15061	PIPE SUPPORTS	Dwayne Kreidler
15063	NON-METALLIC PIPE SUPPORT SYSTEM	Dwayne Kreidler
15075	EQUIPMENT IDENTIFICATION	Dwayne Kreidler
15076	PIPE IDENTIFICATION	Dwayne Kreidler
15082	PIPING INSULATION	Dwayne Kreidler
15110	COMMON WORK RESULTS FOR VALVES	Dwayne Kreidler
15111	BALL VALVES	Dwayne Kreidler
15114	CHECK VALVES	Dwayne Kreidler
15115	GATE, GLOBE, AND ANGLE VALVES	Dwayne Kreidler
15117	SPECIALTY VALVES	Dwayne Kreidler
15118	PRESSURE RELIEF AND PRESSURE SUSTAINING VALVES	Dwayne Kreidler
15119	AIR AND VACUUM RELIEF VALVES	Dwayne Kreidler
15120	PIPING SPECIALTIES	Dwayne Kreidler
15121	PIPE COUPLINGS	Dwayne Kreidler
15122	FIRE HYDRANTS	Dwayne Kreidler
15125	STRAINERS	Dwayne Kreidler
15211	DUCTILE IRON PIPE: AWWA C151	Dwayne Kreidler
15238	PLASTIC TUBING	Dwayne Kreidler
15241	HIGH DENSITY POLYETHYLENE (HDPE) PIPE: AWWA C906	Dwayne Kreidler
15244	POLYVINYL CHLORIDE (PVC) PIPE: AWWA C900 AND AWWA C905	Dwayne Kreidler
15249	POLYVINYL CHLORIDE (PVC) PIPE: SCHEDULE TYPE	Dwayne Kreidler
15286	STAINLESS STEEL PIPE AND TUBING	Dwayne Kreidler

15293	DOUBLE CONTAINMENT PIPING	Dwayne Kreidler
15294	RUBBER HOSE	Dwayne Kreidler
15430	EMERGENCY EYE/FACE WASH AND SHOWER EQUIPMENT	Dwayne Kreidler
15956	PIPING SYSTEMS TESTING	Dwayne Kreidler
15958	MECHANICAL EQUIPMENT TESTING	Dwayne Kreidler

DIVISION 16 - ELECTRICAL

SECTION NO.	TITLE	RESPONSIBLE ENGINEER
16050	COMMON WORK RESULTS FOR ELECTRICAL	Norm Anderson
16060	GROUNDING AND BONDING	Norm Anderson
16070	HANGERS AND SUPPORTS	Norm Anderson
16075	IDENTIFICATION FOR ELECTRICAL SYSTEMS	Norm Anderson
16123	600-VOLT OR LESS WIRES AND CABLES	Norm Anderson
16130	CONDUITS	Norm Anderson
16133	DUCT BANKS	Norm Anderson
16134	BOXES	Norm Anderson
16140	WIRING DEVICES	Norm Anderson
16150	LOW VOLTAGE WIRE CONNECTIONS	Norm Anderson
16210	UTILITY COORDINATION	Norm Anderson
16222	LOW VOLTAGE MOTORS UP TO 500 HORSEPOWER	Norm Anderson
16232	SINGLE DIESEL FUELED ENGINE GENERATOR ABOVE 200 KW	Norm Anderson
16264	VARIABLE FREQUENCY DRIVES 60 - 500 HORSEPOWER	Norm Anderson
16272	DRY-TYPE TRANSFORMERS	Norm Anderson
16285	SURGE PROTECTIVE DEVICES	Norm Anderson
16290	ELECTRICAL POWER MONITORING	Norm Anderson
16305	ELECTRICAL SYSTEM STUDIES	Norm Anderson
16411	DISCONNECT SWITCHES	Norm Anderson
16412	LOW VOLTAGE MOLDED CASE CIRCUIT BREAKERS	Norm Anderson
16422	MOTOR STARTERS	Norm Anderson

16441	GROUP-MOUNTED CIRCUIT BREAKER SWITCHBOARDS	Norm Anderson
16444	LOW VOLTAGE MOTOR CONTROL CENTERS	Norm Anderson
16445	PANELBOARDS	Norm Anderson
16491	TRANSFER SWITCHES	Norm Anderson
16510	LIGHTING: LED LUMINAIRES	Norm Anderson
16670	LIGHTNING PROTECTION	Norm Anderson
16756	VIDEO SURVEILLANCE REMOTE DEVICES AND SENSORS	Norm Anderson
16950	FIELD ELECTRICAL ACCEPTANCE TESTS	Norm Anderson
16990	CONDUIT SCHEDULE	Norm Anderson
16990A	CONDUIT SCHEDULE: AREA 10, 40	Norm Anderson
16990B	CONDUIT SCHEDULE: AREA 11	Norm Anderson
16990C	CONDUIT SCHEDULE: AREA 12	Norm Anderson
16990D	CONDUIT SCHEDULE: AREA 50	Norm Anderson
16990E	CONDUIT SCHEDULE: AREA 80	Norm Anderson
16990F	CONDUIT SCHEDULE: AREA 90	Norm Anderson

DIVISION 17 - INSTRUMENTATION AND CONTROLS

SECTION NO.	**TITLE**	**RESPONSIBLE ENGINEER**
17050	COMMON WORK RESULTS FOR PROCESS CONTROL AND INSTRUMENTATION	Norm Anderson
17100	CONTROL STRATEGIES	Norm Anderson
17101	SPECIFIC CONTROL STRATEGIES	Norm Anderson
17201	LEVEL MEASUREMENT: SWITCHES	Norm Anderson
17208	LEVEL MEASUREMENT: RADAR PULSE TIME OF FLIGHT (PTOF)	Norm Anderson
17301	FLOW MEASUREMENT: SWITCHES	Norm Anderson
17302	FLOW MEASUREMENT: MAGNETIC FLOWMETERS	Norm Anderson
17316	FLOW MEASUREMENT: ROTAMETERS (VARIABLE AREA FLOWMETERS)	Norm Anderson
17402	PRESSURE/VACUUM MEASUREMENT: INSTRUMENT VALVES	Norm Anderson

17403	PRESSURE/VACUUM MEASUREMENT: SWITCHES	Norm Anderson
17404	PRESSURE/VACUUM MEASUREMENT: GAUGES	Norm Anderson
17405	PRESSURE/VACUUM MEASUREMENT: DIRECT	Norm Anderson
17406	PRESSURE/VACUUM MEASUREMENT: DIFFERENTIAL	Norm Anderson
17407	PRESSURE MEASUREMENT: SUBMERSIBLE	Norm Anderson
17501	ANALYZERS: PH	Norm Anderson
17505	ANALYZERS: RESIDUAL CHLORINE	Norm Anderson
17604	TEMPERATURE MEASUREMENT: RTD	Norm Anderson
17710	CONTROL SYSTEMS: PANELS, ENCLOSURES, AND PANEL COMPONENTS	Norm Anderson
17712	CONTROL SYSTEMS: UNINTERRUPTIBLE POWER SUPPLIES 10 KVA AND BELOW	Norm Anderson
17720	CONTROL SYSTEMS: PROGRAMMABLE LOGIC CONTROLLERS	Norm Anderson
17730	CONTROL SYSTEMS: PCS COMPUTER EQUIPMENT	Norm Anderson
17733	CONTROL SYSTEMS: NETWORK MATERIALS AND EQUIPMENT	Norm Anderson
17903	SCHEDULES: I/O LIST	Norm Anderson
17950	TESTING, CALIBRATION, AND COMMISSIONING	Norm Anderson

APPENDIX A

APPENDIX A1	ENVIRONMENTAL RESOURCE PERMIT
APPENDIX A2	SPECIFIC PERMIT FOR CONSTRUCTION OF PWS COMPONENTS
APPENDIX A3	GEOTECHNICAL ENGINEERING REPORT
APPENDIX A4	ENVIRONMENTAL TECHNICAL MEMORANDUM
APPENDIX A5	LANDSCAPE AND IRRIGATION AS-BUILTS

SECTION 15050

COMMON WORK RESULTS FOR MECHANICAL EQUIPMENT

PART 1 GENERAL

1.01 SUMMARY

A. Section includes: Basic design and performance requirements for building mechanical equipment and process mechanical equipment.

1.02 REFERENCES

A. American Gear Manufacturer's Association (AGMA) Standards:
   1. 6001-E08 - Design and Selection of Components for Enclosed Gear Drives.

B. American Bearing Manufactures Association (ABMA) Standards:
   1. 9 - Load Ratings and Fatigue Life for Ball Bearings.
   2. 11 - Load Ratings and Fatigue Life for Roller Bearings.

C. American Petroleum Institute (API):
   1. 682 - Shaft Sealing Systems for Centrifugal and Rotary Pumps.

D. ASTM International (ASTM):
   1. A36 - Standard Specification for Carbon Structural Steel.
   2. A48 - Standard Specification for Gray Iron Castings.
   3. A125 - Standard Specification for Steel Springs, Helical, Heat-Treated.
   4. A193 - Standard Specification for Alloy-Steel and Stainless Steel Bolting for High Temperature or High Pressure Service and Other Special Purpose Applications.
   5. A194 - Standard Specification for Carbon and Alloy Steel Nuts for Bolts for High Pressure or High Temperature Service, or Both.
   6. A320 - Standard Specification for Alloy-Steel and Stainless Steel Bolting for Low-Temperature Service.
   7. A536 - Standard Specification for Ductile Iron Castings.
   8. A653 - Standard Specification for Steel Sheet, Zinc-Coated (Galvanized) or Zinc-Iron Alloy-Coated (Galvannealed) by the Hot-Dip Process.
   9. B61 - Standard Specification for Steam or Valve Bronze Castings.
   10. B62 - Standard specification for Composition Bronze or Ounce Metal Castings.
   11. B505 - Standard Specification for Copper Alloy Continuous Castings.
   12. B584 - Standard Specification for Copper Alloy Sand Castings for General Applications.
   13. F593 - Standard Specification for Stainless Steel Bolts, Hex Cap Screws, and Studs.
   14. F594 - Standard Specification for Stainless Steel Nuts.

E. Hydraulic Institute (HI).

F. Occupational Safety and Health Administration (OSHA).

G. Unified Numbering System (UNS).

1.03 DEFINITIONS

A. Resonant frequency: That frequency at which a small driving force produces an ever-larger vibration if no dampening exists.

B. Rotational frequency: The revolutions per unit of time usually expressed as revolutions per minute.

C. Critical frequency: Same as resonant frequency for the rotating elements or the installed machine and base.

D. Peak vibration velocity: The root mean square average of the peak velocity of the vibrational movement times the square root of 2 in inches per second.

E. Rotational speed: Same as rotational frequency.

F. Maximum excitation frequency: The excitation frequency with the highest vibration velocity of several excitation frequencies that are a function of the design of a particular machine.

G. Critical speed: Same as critical frequency.

H. Free field noise level: Noise measured without any reflective surfaces (an idealized situation); sound pressure levels at 3 feet from the source unless specified otherwise.

I. Operating weight: The weight of unit plus weight of fluids or solids normally contained in unit during operation.

1.04 DESIGN REQUIREMENTS

A. General:
   1. Product requirements as specified in Section 01600 - Product Requirements.
   2. Provisions specified under each technical equipment specification prevail over and supersede conflicting provisions specified in this Section.
   3. Equipment manufacturer's responsibility extends to selection and mounting of gear drive units, motors or other prime movers, accessories, and auxiliaries required for proper operation.
   4. Vibration considerations:
      a. Resonant frequency:
         1) For single-speed equipment, ensure there are no natural resonant frequencies within 25 percent above or below the operating rotational frequencies or multiples of the operating rotational frequencies that may be excited by the equipment design.
         2) For variable-speed equipment, ensure there are no natural resonant frequencies within 25 percent above or below the range of operating frequencies.
      b. Design, balance, and align equipment to meet the vibration criteria specified in Section 15958 - Mechanical Equipment Testing.
   5. Equipment units weighing 50 pounds or more: Provide with lifting lugs or eyes to allow removal with hoist or other lifting device.

B. Power transmission systems:
  1. V-belts, sheaves, shaft couplings, chains, sprockets, mechanical variable-speed drives, variable frequency drives, gear reducers, open and enclosed gearing, clutches, brakes, intermediate shafting, intermediate bearings, and U-joints are to be rated for 24 hour-a-day continuous service or frequent stops-and-starts intermittent service, whichever is most severe, and sized with a service factor of 1.5 or greater in accordance with manufacturer recommendations:
    a. Apply service factor to nameplate horsepower and torque of prime source of power and not to actual equipment loading.
    b. Apply service factors in accordance with AGMA 6001-E08, other applicable AGMA standards, or other applicable referenced standards.

C. Equipment mounting and anchoring:
  1. Mount equipment on cast-iron or welded-steel bases with structural steel support frames.
    a. Utilize continuous welds to seal seams and contact edges between steel members.
    b. Grind welds smooth.
  2. Provide bases and supports with machined support pads, dowels for alignment of mating of adjacent items, adequate openings to facilitate grouting, and openings for electrical conduits.
  3. Provide jacking screws in bases and supports for equipment weighing over 1,000 pounds.
  4. Design equipment anchorage, supports, and connections for dead load, running loads, loads during start-up, and other loads as required for proper operation of equipment.
    a. For equipment with an operating weight of 400 pounds or greater and all equipment that is supported higher than 4 feet above the floor, provide calculations for:
      1) The operating weight and location of the centroid of mass for the equipment.
      2) Forces and overturning moments.
      3) Shear and tension forces in equipment anchorages, supports, and connections.
      4) The design of equipment anchorage, supports, and connections based on calculated shear and tension forces.
  5. Anchorage of equipment to concrete or masonry:
    a. Perform calculations and determine number, size, type, strength, and location of anchor bolts or other connections.
    b. Unless otherwise indicated on the Drawings, select and provide anchors from the types specified in Section 05190 - Mechanical Anchoring and Fastening to Concrete and Masonry.
    c. Provide bolt sleeves around cast-in anchor bolts for 400 pounds or greater equipment.
      1) Adjust bolts to final location and secure the sleeve.
  6. Anchorage of equipment to metal supports:
    a. Perform calculations and determine number, size, type, strength, and location of bolts used to connect equipment to metal supports.
  7. Unless otherwise indicated on the Drawings, install equipment supported on concrete over non-shrink grout pads as specified in this Section.

1.05 SUBMITTALS

A. As specified in Section 01330 - Submittal Procedures.

B. Product data:
   1. For each item of equipment:
      a. Design features.
      b. Load capacities.
      c. Efficiency ratings.
      d. Material designations by UNS alloy number or ASTM Specification and Grade.
      e. Data needed to verify compliance with the Specifications.
      f. Catalog data.
      g. Nameplate data.
      h. Clearly mark submittal information to show specific items, materials, and accessories or options being furnished.
   2. Gear reduction units:
      a. Engineering information in accordance with applicable AGMA standards.
      b. Gear mesh frequencies.

C. Shop drawings:
   1. Drawings for equipment:
      a. Drawings that include cut-away drawings, parts lists, material specification lists, and other information required to substantiate that proposed equipment complies with specified requirements.
   2. Outline drawings showing equipment, driver, driven equipment, pumps, seal, motor(s) or other specified drivers, variable frequency drive, shafting, U-joints, couplings, drive arrangement, gears, base plate or support dimensions, anchor bolt sizes and locations, bearings, and other furnished components.
   3. Installation instructions including leveling and alignment tolerances, grouting, lubrication requirements, and initial Installation Testing procedures.
   4. Wiring, control schematics, control logic diagrams and ladder logic or similar for computer-based controls.
   5. Recommended or normal operating parameters such as temperatures and pressures.
   6. Alarm and shutdown setpoints for all controls furnished.

D. Calculations:
   1. Structural:
      a. Substantiate equipment base plates, supports, bolts, anchor bolts, and other connections meet minimum design requirements specified.
   2. Mechanical:
      a. ABMA 9 or ABMA 11 L10 life for bearings calculation methods for drivers, pumps, gears, shafts, motors, and other driveline components with bearings.
      b. Substantiate that operating rotational frequencies meet the requirements of this Section.

    c. Torsional analysis of power transmission systems: When torsional analysis specified in the equipment sections, provide:
        1) Sketch of system components identifying physical characteristics including mass, diameter, thickness, and stiffness.
        2) Results of analysis including first and second critical frequencies of system components and complete system.
    d. Calculations shall be signed and stamped by a licensed engineer.
3. Drinking water:
    a. If applicable, conform to the requirements of Section 01600 - Product Requirements for materials in contact with drinking water.

E. Operation and maintenance manuals:
1. As specified in Section 01782 - Operation and Maintenance Data.
2. Equipment with bearings:
    a. Include manufacturer and model number of every bearing.
    b. Include calculated ball pass frequencies of the installed equipment for both the inner and outer raceways.

F. Commissioning submittals: As specified in Section 01756 - Commissioning.

G. Project closeout documents: As specified in Section 01770 - Closeout Procedures.

PART 2 PRODUCTS

2.01 MATERIALS

A. Materials as specified in Section 01600 - Product Requirements including special requirements for materials in contact with drinking water.

B. Ferrous materials:
1. Steel for members used in fabrication of assemblies: ASTM A36.
2. Iron castings: ASTM A48, tough, close-grained gray iron, free from blowholes, flaws, and other imperfections.
3. Ductile iron castings: ASTM A536, Grade 65-45-12, free from flaws and imperfections.
4. Galvanized steel sheet: ASTM A653, minimum 0.0635 inch (16 gauge).
5. Expanded metal: ASTM A36, 13 gauge, 1/2-inch flat pattern expanded metal.
6. Stainless steel:
    a. As specified in Section 05120 - Structural Steel.
    b. In contact or within 36 inches of water: Type 316 or 316L.
    c. In sea air environment: Type 316 or 316L.
    d. Source cleaning and passivation as specified in Section 05120 - Structural Steel.

C. Non-ferrous materials:
1. Bronze in contact with drinking water: Composition of not more than 2 percent aluminum nor more than 6 percent zinc; UNS Alloy C89833, C89520, or C92200 in accordance with ASTM B61, B62, B505, or B584, when not specified otherwise.
2. Aluminum: As specified in Section 05500 - Metal Fabrications.

D. Dielectric materials for separation of dissimilar metals:
  1. Neoprene, bituminous impregnated felt, heavy bituminous coatings, nonmetallic separators or washers, or other materials as specified.

E. Non-shrink grout and epoxy non-shrink grout: As specified in Section 03600 - Grouting.

2.02 ANCHORS AND FASTENERS

A. Mechanical anchoring to concrete and masonry:
  1. As specified in Section 05190 - Mechanical Anchoring and Fastening to Concrete and Masonry:
    a. Type 316 stainless steel.

B. High-strength fasteners:
  1. As specified in Section 05120 - Structural Steel.

C. Flange bolts:
  1. As specified in Section 15052 - Common Work Results for Mechanical Equipment.

D. Mechanical assembly fasteners:
  1. Stainless steel:
    a. High-temperature service or high-pressure service:
      1) Bolts: ASTM A193, Grade B8 (Type 304) or Grade B8M (Type 316), Class 1, heavy hex.
      2) Nuts: ASTM A194, Grade 8, heavy hex.
      3) Washers: Alloy group matching bolts and nuts.
    b. Low-temperature service:
      1) Bolts: ASTM A320, Grade B8 (Type 304) or Grade B8M (Type 316), Class 1, heavy hex.
      2) Nuts: ASTM A194, Grade 8 (Type 304) or Grade B8M (Type 316), heavy hex.
      3) Washers: Alloy group matching bolts and nuts.
    c. General service:
      1) Bolts: ASTM F593, Alloy Group 1 (Type 304) or Alloy Group 2 (Type 316).
      2) Nuts: ASTM F594, Alloy Group 1 (Type 304) or Alloy Group 2 (Type 316).
      3) Washers: Alloy group matching bolts and nuts.

2.03 SHAFT COUPLINGS

A. General:
  1. Type and ratings: Provide non-lubricated type, designed for not less than 50,000 hours of operating life.
  2. Sizes: Provide as recommended by manufacturer for specific application, considering horsepower, speed of rotation, and type of service.

B. Shaft couplings for close-coupled electric-motor-driven equipment:
  1. Use for:
     a. Equipment 1/2 horsepower or larger.
     b. Reversing equipment.
     c. Equipment subject to sudden torque reversals or shock loading:
     d. Examples:
        1) Reciprocating pumps, blowers, and compressors.
        2) Conveyor belts.
  2. Manufacturers: One of the following or equal:
     a. Lovejoy.
     b. T.B. Woods.
  3. Provide flexible couplings designed to accommodate angular misalignment, parallel misalignment, and end float.
  4. Manufacture flexible component of coupling from synthetic rubber or urethane.
  5. Provide service factor of 2.5 for electric motor drives and 3.5 for engine drives.
  6. Do not allow metal-to-metal contact between driver and driven equipment.

C. Shaft couplings for direct-connected electric-motor-driven equipment:
  1. Use for 1/2 horsepower or larger and subject to normal torque, non-reversing applications.
  2. Manufacturers: One of the following or equal:
     a. Rexnord.
     b. T.B. Woods.
  3. Provide flexible couplings designed to accommodate shock loading, vibration, and shaft misalignment or offset.
  4. Provide flexible connecting element of rubber and reinforcement fibers.
  5. Provide service factor of 2.0.
  6. Connect stub shafts through collars or round flanges, firmly keyed to their shafts with neoprene cylinders held to individual flanges by through pins.

D. Spacer couplings: Where cartridge-type mechanical seals or non-split seals are specified, provide a spacer-type coupling of sufficient length to remove the seal without disturbing the driver or driven equipment unless noted otherwise in the individual equipment specifications.

E. Specialized couplings: Where requirements of equipment dictate specialized features, supply coupling recommended for service by manufacturer:
  1. Includes any engine-driven equipment.

2.04 STUFFING BOX, SEAL CHAMBER, AND SHAFT SEALS

A. General:
  1. Unless otherwise noted in the equipment section, provide cartridge-type, double mechanical shaft seals for pumps.
  2. Provide a stuffing box large enough for a double mechanical seal.
  3. Where packing is specified, provide stuffing box large enough to receive a double mechanical seal.
  4. Provide seal or packing flush connections, (3/4-inch size unless another size is indicated on the Drawings).
  5. Provide and route leakage drain line to nearest equipment floor drain indicated on the Drawings.

6. For pumps with packing, design packing gland to allow adjustment and repacking without dismantling pump except to open up packing box.
7. Seal or packing flush requirements shall be in accordance with API Standard 682 requirements. Unless otherwise indicated, specified or required by the equipment and seal manufacturers, the following API flushing Plan arrangements shall be utilized as appropriate for the application:
    a. Single seal, clean water applications: Plan 11 (Discharge bypass to seal).
    b. Single seal, vertical pump applications: Plan 13 (Seal bypass to suction).
    c. Single seal, clean hot water (greater than 180 degrees Fahrenheit) applications: Plan 23 (Seal cooler and pumping ring).
    d. Single seal, solids, or contaminants containing water applications: Plan 32 (External seal water).
    e. Double seal applications: Plan 54 (External seal water).

B. Packing: When specified in the equipment section of the specifications, provide the following type of packing:
1. Wastewater, water, and sludge applications:
    a. Asbestos free.
    b. PTFE (Teflon) free.
    c. Braided graphite.
    d. Manufacturers: One of the following or equal:
        1) Chesterton, 1400.
        2) John Crane, equivalent product.
2. Drinking water service:
    a. Asbestos free.
    b. Material: Braided PTFE (Teflon).
    c. Manufacturers: One of the following or equal:
        1) Chesterton, 1725.
        2) John Crane, equivalent product.

C. Mechanical seals: Provide seal types specified in the equipment sections and as specified.
1. Provide seal types meeting the following requirements:
    a. Balanced hydraulically.
    b. Spring: Stationary, out of pumping fluid, Hastelloy C; Type Elgiloy or 17-7 PH stainless steel for split seals.
    c. O-ring: Viton 747.
    d. Gland: Type 316L stainless steel.
    e. Set screws: Type 316L stainless steel.
    f. Faces: Reaction bonded, silicon carbide.
    g. Seal designed to withstand 300 pounds per square inch gauge minimum differential pressures in either direction; no requirement for seal buffer pressure to be maintained when pump is not operational even though process suction head may be present in pump.
2. Cartridge-type single mechanical: Manufacturers: One of the following or equal:
    a. Chesterton, S10.
    b. John Crane, 5610 Series.
3. Cartridge-type double mechanical: Manufacturers: One of the following or equal:
    a. Chesterton, S20.
    b. John Crane, 5620 Series.

4. Split-face single mechanical: Manufacturers: One of the following or equal:
    a. Chesterton, 442.
    b. John Crane, 3740.
5. Cartridge-type flushless mechanical: Manufacturers: One of the following or equal:
    a. Chesterton, 156.
    b. John Crane, 5870.

2.05 GEAR REDUCTION UNITS

A. Type: Helical or herringbone, unless otherwise specified.

B. Design:
1. Made of alloys treated for hardness and for severe service.
2. AGMA Class II service:
    a. Use more severe service condition when such is recommended by unit's manufacturer.
3. Cast-iron housing with gears running in oil.
4. Anti-friction bearings.
5. Thermal horsepower rating based on maximum horsepower rating of prime mover, not actual load.
6. Manufactured in accordance with applicable AGMA standards.

C. Planetary gear units are not to be used.

2.06 BELT DRIVES

A. Sheaves:
1. Separately mounted on bushings by means of at least 3 pull-up bolts or cap tightening screws.
2. When 2 sheave sizes are specified, provide separate belts sized for each set of sheaves.
3. Statically balanced for all; dynamically balanced for sheaves that operate at a peripheral speed of more than 5,500 feet per minute.
4. Key bushings to drive shaft.

B. Belts: Anti-static type when explosion-proof equipment or environment is specified.
1. When spare belts are specified, furnish 1 spare belt for every different type and size of belt-driven unit:
    a. Where 2 or more belts are involved, furnish matched sets.
    b. Identify as to equipment, design, horsepower, speed, length, sheave size, and use.
    c. Package in boxes labeled with identification of contents.

C. Manufacturers: One of the following or equal:
1. Dodge, Dyna-V belts with matching Dyna-V sheaves and Taper-Lock bushings.
2. T.B. Woods, Ultra-V belts with matching Sure-Grip sheaves and Sure-Grip bushings.

2.07 BEARINGS

A. Type: Oil or grease lubricated, ball or roller antifriction type, of standard manufacture.

B. Oil-lubricated bearings: Provide either pressure lubricating system or separate oil reservoir splash-type system:
  1. Size oil-lubrication systems to safely absorb heat energy generated in bearings when equipment is operating under normal conditions and with the temperature 15 degrees Fahrenheit above the maximum design temperature of 120 degrees Fahrenheit.
  2. Provide an external oil cooler when required to satisfy the specified operating conditions:
    a. Provide air-cooled system if a water-cooling source is not indicated on the Drawings.
    b. Equip oil cooler with a filler pipe and external level gauge.

C. Grease lubricated bearings, except those specified to be factory sealed: Fit with easily accessible grease supply, flush, drain, and relief fittings.
  1. Lubrication lines and fittings:
    a. Lines: Minimum 1/4-inch diameter stainless steel tubing.
    b. Multiple fitting assemblies: Mount fittings together in easily accessible location.
    c. Use standard hydraulic-type grease supply fittings:
      1) Manufacturers: One of the following or equal:
        a) Alenite.
        b) Zerk.

D. Ratings: Rated in accordance with ABMA 9 or ABMA 11 L10 life for bearings rating life of not less than 50,000 hours.

2.08 MOTORS

A. As specified in Section 16222 - Low Voltage Motors up to 500 Horsepower.

2.09 GEAR MOTORS

A. Motors as specified in Section 16222 - Low Voltage Motors up to 500 Horsepower.

B. Helical gearing for parallel shaft drives and worm gearing for right-angle drives.

C. One of the following or equal:
  1. Baldor Electric Company.
  2. Bodine Electric Company.

2.10 VENDOR CONTROL PANELS

A. As specified in Section 17050 - Common Work Results for Control and Instrumentation Systems.

2.11 EQUIPMENT SUPPORT FRAMES

A. Bolt holes shall not exceed bolt diameter by more than 25 percent, up to a limiting maximum diameter oversize of 1/4 inch.

2.12 PIPING AND VALVES

A. Piping as specified in Section 15052 - Common Work Results for Mechanical Equipment.

B. Valves as specified in Section 15110 - Common Work Results for Valves.

2.13 SAFETY EQUIPMENT

A. Safety guards:
   1. Provide guards that protect personnel from rotating shafts or components within 7.5 feet of floors or operating platforms.
   2. Requirements:
      a. Allow visual inspection of moving parts without removal.
      b. Allow access to lubrication fittings.
      c. Prevent entrance of rain or dripping water for outdoor locations.
      d. Size belt and sheave guards to allow for installation of sheaves 15 percent larger and addition of 1 belt.
   3. Materials:
      a. Sheet metal: Carbon steel, 12-gauge minimum thickness, hot-dip galvanized after fabrication.
      b. Fasteners: Type 304 stainless steel.

B. Insulation:
   1. Insulate all surfaces with normal operating temperatures above 120 degrees Fahrenheit when surface is within 7.5 feet height from any operating floor or level.
   2. Insulation thickness such that temperature is below 120 degrees Fahrenheit.
   3. Insulation Type 3 and cover Type 5 as specified in Section 15082 - Piping Insulation.

C. Warning signs:
   1. Provide warning signs in accordance with OSHA requirements for equipment that starts automatically or remotely.
   2. Material, sign size, and text:
      a. Manufacturer: Meeting OSHA Requirements; 40-mil thick aluminum with baked enamel finish. One of the following or equal:
         1. Seton Name Plate Co., Branford, Connecticut, Special Wording.
         2. Emedco, Buffalo, New York
   3. Mount warning signs with stainless steel fasteners at equipment.

2.14 SPRING VIBRATION ISOLATORS

A. Design requirements:
   1. Telescopic top and bottom housing with vertical stabilizers to resist lateral and vertical forces.

   2. Use steel coil springs.
   3. Design vibration isolators in accordance with seismic design criteria as specified in the Florida Building Code 2017 Edition.

B. Performance requirements: Minimum spring deflection of 1 inch under static load and capable of limiting transmissibility to 15 percent maximum at design operating load.

C. Manufacturers: One of the following or equal:
   1. California Dynamics Corporation, Type RJSD.
   2. Mason Industries, equivalent product.

D. Materials:
   1. Fabricate isolators using welded-steel or shatterproof ductile iron in accordance with ASTM A536 Grade CS-45-12.
   2. Spring steel: ASTM A125.

2.15 NAMEPLATES

A. Fastened to equipment at factory in an accessible and visible location.

B. Stainless steel sheet engraved or stamped with text, holes drilled or punched for fasteners.

C. Fasteners: Number 4 or larger oval head stainless steel screws or drive pins.

D. Text:
   1. Manufacturer's name, equipment model number and serial number, motor horsepower when appropriate, and identification tag number.
   2. Indicate the following additional information as applicable:
      a. Maximum and normal rotating speed.
      b. Service class per applicable standards.
   3. Include for pumps:
      a. Rated total dynamic head in feet of fluid.
      b. Rated flow in gallons per minute.
      c. Impeller, gear, screw, diaphragm, or piston size.
   4. Include for gear reduction units:
      a. AGMA class of service.
      b. Service factor.
      c. Input and output speeds.

2.16 SHOP FINISHES

A. Provide appropriate factory coatings as specified in Section 09960 - High-Performance Coatings.
   1. Motors and gear reducers: Shop finish paint with manufacturer's standard coating, unless otherwise specified in the individual equipment specification.

2.17 SPECIAL TOOLS

A. Supply one set of special tools as specified in Section 01600 - Product Requirements.

2.18 SOURCE TESTING

A. Testing requirements unless specified otherwise in the individual equipment specifications:
   1. Mechanical equipment: Level 1 General Equipment Performance Test as specified in Section 15958 - Mechanical Equipment Testing.
   2. Motors: As specified in Section 16222 - Low Voltage Motors up to 500 Horsepower.
   3. Vendor control panels: As specified in Section 17950 - Testing, Calibration, and Commissioning.

2.19 SHIPPING

A. As specified in Section 01600 - Product Requirements.

B. Prior to shipment of equipment:
   1. Bearings (and similar items):
      a. Pack separately or provide other protection during transport.
      b. Greased and lubricated.
   2. Gear boxes:
      a. Oil filled or sprayed with rust preventive protective coating.
   3. Fasteners:
      a. Inspect for proper torques and tightness.

PART 3 EXECUTION

3.01 DELIVERY, HANDLING, STORAGE, AND PROTECTION

A. As specified in Section 01600 - Product Requirements.

B. Inspect fasteners for proper torques and tightness.

C. Storage:
   1. Bearings:
      a. Rotate units at least once per month or more often as recommended by the manufacturer to protect rotating elements and bearings.
   2. Gear boxes:
      a. Inspect to verify integrity of protection from rust.

D. Protection:
   1. Equipment Log shall include description of rotation performed as part of maintenance activities.

3.02 INSTALLATION

A. Field measurements:
   1. Prior to shop drawings preparation, take measurements and verify dimensions indicated on the Drawings.
   2. Ensure equipment and ancillary appurtenances fit within available space.

B. Sequencing and scheduling:
   1. Equipment anchoring: Obtain anchoring material and templates or setting drawings from equipment manufacturers in adequate time for anchors to be cast-in-place.
   2. Coordinate details of equipment with other related parts of the Work, including verification that structures, piping, wiring, and equipment components are compatible.

C. Metal work embedded in concrete:
   1. Accurately place and hold in correct position while concrete is being placed.
   2. Clean surface of metal in contact with concrete immediately before concrete is placed.

D. Concrete surfaces designated to receive non-shrink grout:
   1. Heavy sandblast concrete surface in contact with non-shrink grout.
   2. Clean concrete surfaces of sandblasting sand, grease, oil, dirt, and other foreign material that may reduce bond to non-shrink grout.
   3. Saturate concrete with water. Concrete shall be saturated surface damp at time non-shrink grout is placed.

E. Install equipment in accordance with manufacturer's installation instructions and recommendations.

F. Lubrication lines and fittings:
   1. Support and protect lines from source to point of use.
   2. Fittings:
      a. Bring fittings to outside of equipment in manner such that they are readily accessible from outside without necessity of removing covers, plates, housings, or guards.
      b. Mount fittings together wherever possible using factory-mounted multiple fitting assemblies securely mounted, parallel with equipment lines, and protected from damage.
      c. Fittings for underwater bearings: Bring fittings above water surface and mount on edge of structure above.

G. Alignment of drivers and equipment:
   1. Where drive motors or other drivers are connected to driven equipment by flexible coupling, disconnect coupling halves and align driver and equipment after complete unit has been leveled on its foundation.
   2. Comply with procedures of appropriate HI, AGMA Standards, alignment tolerances of equipment manufacturers and the following requirements to bring components into angular and parallel alignment:
      a. Maximum total coupling offset (not the per-plane offset): Not to exceed 0.5 mils per inch of coupling length for spacer couplings based on coupling length (not dial separation).
      b. Utilize jacking screws, wedges, or shims as recommended by the equipment manufacturer and as specified in the equipment sections.
   3. Use reverse-indicator arrangement dial-type or laser-type alignment indicators: Mount indicators on the driver/coupling flange and equipment/coupling flange. Alignment instrumentation accuracy shall be sufficient to read angular and radial misalignment at 10 percent or less of the manufacturer's recommended acceptable misalignment.

4. Alignment and calculations shall include measurement and allowance for thermal growth, spacer coupling length, indicator separation, and axial spacing tolerances of the coupling.
5. When alignment satisfies most stringent tolerance of system components, grout between base and foundation.
    a. Allow minimum 48 hours for grout to harden.
    b. After grout hardens, remove jacking screws, tighten anchor bolts and other connections, and recheck alignment.
    c. Correct alignment as required.
6. After functional testing is complete, dowel motor or drivers and driven equipment:
    a. Comply with manufacturer's instructions.

H. Grouting under equipment bases, baseplates, soleplates, and skids:
1. Unless otherwise indicated on the Drawings, grout with non-shrink grout as specified in Section 03600 - Grouting.
    a. Non-shrink epoxy grout required only when indicated on the Drawings.
2. Comply with equipment manufacturer's installation instructions for grouting spaces, and tolerances for level and vertical and horizontal alignment.
3. Install grout only after:
    a. Equipment is leveled and in proper alignment.
    b. Piping connections are complete and in alignment with no strain transmitted to equipment.
4. Do not use leveling nuts on equipment anchors for supporting and leveling equipment bases, baseplates, soleplates, and skids for grouting.
5. Use jack screws for supporting and leveling equipment bases, baseplates, soleplates, and skids for grouting following the procedure defined below:
    a. Drill and tap equipment base plates, sole plates, and skids for jack screws.
    b. Use suitable number and size of jack screws.
    c. End of jack screws shall bear on circular steel plates epoxy bonded to equipment foundation.
    d. Jack screw threads that will be in contact with grout: Wrap with multiple layers of tape or other material, acceptable to Engineer, to prevent grout from bonding to threads.
    e. Place and cure grout as specified in Section 03600 - Grouting.
    f. After grout is cured, remove jack screws and material used to prevent bonding to grout.
        1) Provide jack screws to Owner for future use.
    g. Tighten equipment anchors in accordance with equipment manufacturer requirements.
    h. Fill holes where jack screws have been removed with grout.
    i. Cure as specified in Section 03600 - Grouting.
6. For equipment bases, baseplates, soleplates, and skids where it is not practical to use jack screws, use steel wedges and shims.
    a. Wrap wedges and shims that contact grout with multiple layers of tape or other material, acceptable to Engineer, to prevent grout from bonding.
    b. Place and cure grout as specified in Section 03600 - Grouting.
    c. Remove wedges or shims.
    d. Tighten equipment anchors to in accordance with equipment manufacturer requirements.
    e. Fill voids where wedges and shims have been removed with grout.

        f. Cure as specified in Section 03600 - Grouting.
    7. Preparation of equipment bases, baseplates, soleplates, and skids for grouting:
        a. Metal in contact with grout: Grit blast to white metal finish.
        b. Clean surfaces of equipment bases, baseplates, soleplates, and skids in contact with grout of dirt, dust, oil, grease, paint, and other material that will reduce bond.
    8. Preparation of concrete equipment foundation for grouting:
        a. Rough concrete surfaces in contact with grout.
        b. Concrete contact surface shall be free of dirt, dust, laitance, particles, loose concrete, or other material or coatings that will reduce bond.
        c. Saturate concrete contact surface area with water for minimum of 24 hours prior to grouting.
        d. Remove standing water just prior to grout placement, using clean rags or oil-free compressed air.
    9. Forms and header boxes:
        a. Build forms for grouting of material with adequate strength to withstand placement of grouts.
        b. Use forms that are rigid and liquid tight. Caulk cracks and joints with an elastomeric sealant.
        c. Line forms with polyethylene film for easy grout release. Forms carefully waxed with 2 coats of heavy-duty paste wax will also be acceptable.
    10. Grout placement requirements:
        a. Minimum ambient and substrate temperature: 45 degrees Fahrenheit and rising:
            1) Conform to grout manufacturer's temperature requirements.
        b. Pour grout using header box.
        c. Keep level of grout in header box above bottom of equipment bases, baseplates, soleplates, and skids at all times to prevent air entrapment.
        d. Grout shall flow continuously from header box to other side of forms without trapping air or forming voids.
        e. Vibrate, rod, or chain grout to facilitate grout flow, consolidate grout, and remove entrapped air.
        f. After grout sets, remove forms and trim grout at 45-degree angle from bottom edge of equipment bases, baseplates, soleplates, and skids.
        g. Cure as specified in Section 03600 - Grouting.

I. Special techniques:
    1. Use applicable special tools and equipment, including precision machinist levels, dial indicators, and gauges as required in equipment installations.

J. Tolerances:
    1. Completed equipment installations: Comply with requirements for intended use and specified vibration and noise tolerances.

K. Warning signs:
    1. Mount securely with stainless fasteners at equipment that can be started automatically or from remote locations.

3.03 FIELD PAINTING

A. Compatible with factory painting.

B. As specified in Section 09960 - High-Performance Coatings.

3.04 COMMISSIONING

A. As specified in Section 01756 - Commissioning.

B. Functional testing requirements unless specified otherwise in the individual equipment specifications:
   1. Mechanical equipment: Level 1 tests as specified in Section 15958 - Mechanical Equipment Testing.
   2. Motors: As specified in Sections 16222 - Low Voltage Motors up to 500 Horsepower and 16950 - Field Electrical Acceptance Tests.
   3. Vendor control panels: As specified in Section 17950 - Testing, Calibration, and Commissioning.

END OF SECTION

SECTION 15052

COMMON WORK RESULTS FOR GENERAL PIPING

PART 1 GENERAL

1.01 SUMMARY

A. Section includes: Basic piping materials and methods.

1.02 REFERENCES

A. American Society of Mechanical Engineers (ASME):
  1. B16.5 - Pipe Flanges and Flanged Fittings: NPS 1/2 through 24.
  2. B16.47 - Large Diameter Steel Flanges: NPS 26 Through NPS 60 Metric/Inch Standard.

B. American Water Work Association (AWWA):
  1. C105 - Standard for Polyethylene Encasement for Ductile-Iron Pipe Systems.
  2. C207 - Standard for Steel Pipe Flanges for Waterworks Services-Size 4 In. Through 144 In.

C. ASTM International (ASTM):
  1. A193 - Standard Specification for Alloy-Steel and Stainless Steel Bolting Materials for High Temperature or High Pressure Service and Other Special Purpose Applications.
  2. A194 - Standard Specification for Carbon and Alloy Steel Nuts for Bolts for High Pressure or High Temperature Service, or Both.
  3. A307 - Standard Specification for Carbon Steel Bolts and Studs, 60,000 PSI Tensile Strength.
  4. A563 - Standard Specification for Carbon and Alloy Steel Nuts.
  5. F37 - Standard Test Methods for Sealability of Gasket Materials.

D. California Health and Safety Code.

E. NSF International (NSF):
  1. 61 - Drinking Water System Components - Health Effects.
  2. 372 - Drinking Water System Components - Lead Content.

1.03 DEFINITIONS

A. Buried pipe: Pipe that is buried in the soil or cast in a concrete pipe encasement that is buried in the soil.

B. Exposed pipe: Pipe that is located above ground, or pipe that is located inside a structure, supported by a structure, or cast into a concrete structure.

C. Underground piping: Piping actually buried in soil or cast in concrete that is buried in soil.

D. Underwater piping: Piping below tops of walls in basins or tanks containing water.

E. Wet wall: Wall with water on at least 1 side.

1.04 SUBMITTALS

A. Submit as specified in Section 01330 - Submittal Procedures.

B. Product data:
  1. For each piping product in this Section as applicable:
    a. Design features.
    b. Load capacities.
    c. Material designations by UNS alloy number or ASTM Specification and Grade.
    d. Data needed to verify compliance with the Specifications.
    e. Catalog data.
    f. Clearly mark submittal information to show specific items, materials, and accessories or options being furnished.

C. Calculations:
  1. Provide calculations in accordance with NSF 372 for materials in contact with drinking water.

1.05 WARRANTY

A. Provide warranty as specified in Section 01783 - Warranties and Bonds.

PART 2 PRODUCTS

2.01 GENERAL

A. As specified in Section 01600 - Product Requirements.

B. Materials in contact with drinking waters: In accordance with NSF 61 and NSF 372.

2.02 ESCUTCHEONS

A. Material: Chrome-plated steel plate.

B. Manufacturers: One of the following or equal:
  1. Dearborn Brass Company, Model Number 5358.
  2. Keeney Manufacturing Company, Model Number 102 or Number 105.

2.03 LINK TYPE SEALS

A. Characteristics:
  1. Modular mechanical type, consisting of interlocking neoprene or synthetic rubber links shaped to continuously fill the annular space between the pipe and wall opening.
  2. Assemble links solely with stainless steel bolts and nuts to form a continuous rubber belt around the pipe.
  3. Provide a nylon polymer pressure plate with Type 316 stainless steel hardware. Isolate pressure plate from contact with wall sleeve.

B. Manufacturers: One of the following or equal:
  1. Calpico, Incorporated.
  2. Pipeline Seal and Insulator, Inc., Link-Seal.

2.04 FLANGE BOLTS

A. Ductile iron pipe:
  1. Bolts and nuts for ductile iron pipe flanges located indoors, outdoors above ground, or in dry vaults and structures and where pressures do not exceed 150 pounds per square inch shall be hot-dip galvanized carbon steel, ASTM A307, Grade B A563 - Standard Specification for Carbon and Alloy Steel Nuts.
  2. Bolts and nuts for ductile iron pipe flanges located indoors, outdoors above ground, or in dry vaults and structures where the pressures exceed 150 pounds per square inch shall be alloy steel, ASTM A193, Grade B7 for bolts and in accordance with ASTM A194, Grade 2H for nuts.
  3. Bolts and nuts for ductile iron pipe flanges submerged in water or wastewater, buried, in wet vaults or structures, adjacent to wet walls, or above open water-containing structures shall be Type 316 stainless steel in accordance with ASTM A193, Grade B8M for bolts and in accordance with ASTM A194, Grade 8M for nuts.
  4. Provide a washer for each nut. Washer shall be of the same material as the nut.
  5. Nuts shall be heavy hex-head.
  6. Cut and finish flange bolts to project a maximum of 1/4 inch beyond outside face of nut after assembly.
  7. Tap holes for cap screws or stud bolts when used.

B. Plastic pipe:
  1. Bolts and nuts for flanges on plastic pipe located indoors, outdoors above ground, or in dry vaults and structures shall be hot-dip galvanized carbon steel, in accordance with ASTM A307, Grade B for bolts and in accordance with ASTM A563, Grade A for nuts.
  2. Bolts and nuts for flanges on plastic pipe submerged in water or wastewater, buried, in wet vaults or structures, adjacent to wet walls, or above open water-containing structures and plastic pipe carrying corrosive chemicals shall be Type 316 stainless steel in accordance with ASTM A193, Grade B8M for bolts and in accordance with ASTM A194, Grade 8M for nuts.
  3. Provide a washer for each nut. Washer shall be of the same material as the nut.
  4. Nuts shall be heavy hex-head.
  5. Cut and finish flange bolts to project a maximum of 1/4 inch beyond outside face of nut after assembly.
  6. Tap holes for cap screws or stud bolts when used.

C. Lubricant for stainless steel bolts and nuts:
  1. Chloride-free.
  2. Manufacturers: One of the following or equal:
    a. Huskey FG-1800.

2.05 GASKETS

A. Gaskets for non-steam cleaned ductile iron and steel piping:
   1. Suitable for pressures equal and less than 150 pounds per square inch gauge, temperatures equal and less than 250 degrees Fahrenheit, and raw sewage service.
   2. Gasket material:
      a. Neoprene elastomer with minimum Shore A hardness value of 70.
      b. Reinforcement: Inserted 13-ounce nylon fabric cloth for pipes 20 inch or larger.
      c. Thickness: Minimum 3/32-inch thick for less than 10-inch pipe; minimum 1/8-inch-thick for 10-inch and larger pipe.
   3. Manufacturers: One of the following or equal:
      a. Garlock, Style 7797.
      b. John Crane, similar product.

B. Gaskets for steam cleaned non glass-lined ductile iron and steel piping:
   1. Suitable for pressures equal and less than 150 pounds per square inch gauge, temperatures equal and less than 360 degrees Fahrenheit, and raw sewage service.
   2. Material:
      a. Neoprene elastomer, compressed, non-asbestos fiber reinforcement.
   3. Manufacturers: One of the following or equal:
      a. Garlock, Bluegard 3300.
      b. John Crane, similar product.

C. Gaskets for steam cleaned glass lined ductile iron piping:
   1. Suitable for pressures equal and less than 150 pounds per square inch gauge, temperatures equal and less than 360 degrees Fahrenheit, and sludge service.
   2. Material:
      a. Teflon gasketing with 1/16-inch sheet thickness each side (1/8-inch total sheet thickness), filled with corrugated or perforated Type 316 stainless steel ring and non-asbestos filler material with minimum 5/16-inch overall thickness.
   3. Manufacturers: One of the following or equal:
      a. Garlock, Style HP3561.
      b. John Crane, similar product.

D. Gaskets for flanged joints in polyvinyl chloride and polyethylene piping:
   1. Suitable for pressures equal and less than 150 pounds per square inch gauge, with low flange bolt loadings, temperatures equal and less than 120 degrees Fahrenheit, and polymer, chlorine, caustic solutions, and other chemicals, except chemicals which liberate free fluorine including fluorochemicals and gaseous fluorine.
   2. Material: 0.125-inch thick Viton rubber.
   3. Manufacturers: One of the following or equal:
      a. Garlock.
      b. John Crane, similar product.

E. Gaskets for flanged joints in ductile iron or steel water piping meeting NSF requirements:
   1. Suitable for hot or cold water, pressures equal and less than 150 pounds per square inch gauge, and temperatures equal and less than 160 degrees Fahrenheit.
   2. Material:
      a. Neoprene elastomer, compressed, with non-asbestos fiber reinforcement.
   3. Manufacturers: One of the following or equal:
      a. Garlock, Bluegard 3300.
      b. John Crane, similar product.

F. Gaskets for flanged joints in ductile iron or steel drinking water piping meeting NSF requirements:
   1. Suitable for hot or cold water, pressures equal to or less than 150 pounds per square inch gauge, and temperatures equal to or less than 160 degrees Fahrenheit.
   2. Material:
      a. PTFE material with glass microsphere filler.
   3. Manufacturers: One of the following or equal:
      a. Garlock, GYLON® Style 3505.
      b. John Crane, similar product.

G. Provide gaskets suitable for the specific fluids and pressure and temperature conditions.

2.06 LEAD LIMITS

A. Comply with NSF 61.

PART 3 EXECUTION

3.01 INSTALLATION

A. General:
   1. Piping drawings:
      a. Except in details, piping is indicated diagrammatically. Not every offset and fitting, or structural difficulty that may be encountered has been indicated on the Drawings. Sizes and locations are indicated on the Drawings.
      b. Perform minor modifications to piping alignment where necessary to avoid structural, mechanical, or other type of obstructions that cannot be removed or changed.
         1) Modifications are intended to be of minor scope, not involving a change to the design concept or a change to the Contract Price or Contract Times.
   2. Piping alternatives:
      a. Provide piping as specified in this Section, unless indicated on the Drawings or specified otherwise.

        - b. Alternative pipe ratings:
            - 1) Piping with greater pressure rating than specified may be substituted in lieu of specified piping without changes to the Contract Price.
            - 2) Piping of different material may not be substituted in lieu of specified piping.
        - c. Valves in piping sections: Capable of withstanding specified test pressures for piping sections and fabricated with ends to fit piping.
        - d. For grooved joints, use couplings, flange adapters, and fittings of the same manufacturer.
            - 1) The grooved joint manufacturer's factory trained representative shall provide on-site training for Contractor's field personnel.
            - 2) The representative shall periodically visit the jobsite and review Contractor is following best recommended practices in grooved product installation.
            - 3) A distributor's representative is not considered qualified to conduct the training or jobsite visit(s).
        - e. For flanged joints, where 1 of the joining flanges is raised face type, provide a matching raised face type flange for the other joining flange.
    - 3. Unless otherwise indicated on the Drawings, piping at pipe joints, fittings, couplings, and equipment shall be installed without rotation, angular deflection, vertical offset, or horizontal offset.

- B. Wall and slab penetrations:
    - 1. Provide sleeves for piping penetrations through aboveground masonry and concrete walls, floors, ceilings, roofs, unless specified or otherwise indicated on the Drawings.
    - 2. For piping 1 inch in nominal diameter and larger, provide sleeves with minimum inside diameters of 1 inch plus outside diameter of piping. For piping smaller than 1 inch in nominal diameter, provide sleeve of minimum twice the outside diameter of piping.
        - a. Arrange sleeves and adjacent joints so piping can be pulled out of sleeves and replaced without disturbing the structure.
        - b. Cut ends of sleeves flush with surfaces of concrete, masonry, or plaster.
        - c. Conceal ends of sleeves with escutcheons where piping runs through floors, walls, or ceilings of finished spaces within buildings.
        - d. Seal spaces between pipes and sleeves with link-type seals when not otherwise specified or indicated on the Drawings.
        - e. Seal openings around piping running through interior walls and floors of chlorine rooms and chlorine storage rooms gastight with synthetic rubber sealing compound.
    - 3. Provide flexibility in piping connecting to structures to accommodate movement due to soil settlement. Provide flexibility using details indicated on the Drawings.
    - 4. Core drilled openings:
        - a. Do not damage or cut existing reinforcing bars, electrical conduits, or other items embedded in the existing concrete without acceptance by Engineer.
        - b. Determine location of reinforcing bars or other obstructions with a non-destructive indicator device.

        - c. Remove dust and debris from hole using compressed air.

- C. Exposed piping:
    - 1. Install exposed piping in straight runs parallel to the axes of structures, unless otherwise indicated on the Drawings:
        - a. Install piping runs plumb and level, unless otherwise indicated on the Drawings.
            - 1) Slope plumbing drain piping with a minimum of 1/4 inch per foot downward in the direction of flow.
    - 2. Install exposed piping after installing equipment and after piping and fitting locations have been determined.
    - 3. Support piping: As specified in Sections 15061 - Pipe Supports, and 15063 - Non-Metallic Pipe Support System:
        - a. Do not transfer pipe loads and strain to equipment.
    - 4. In addition to the joints indicated on the Drawings, provide unions, flexible couplings, flanged joints, flanged coupling adapters, and other types of joints or means which are compatible with and suitable for the piping system, and necessary to allow ready assembly and disassembly of the piping.
    - 5. Assemble piping without distortion or stresses caused by misalignment:
        - a. Match and properly orient flanges, unions, flexible couplings, and other connections.
        - b. Do not subject piping to bending or other undue stresses when fitting piping.
        - c. Do not correct defective orientation or alignment by distorting flanged joints or subjecting flange bolts to bending or other undue stresses.
        - d. Flange bolts, union halves, flexible connectors, and other connection elements shall slip freely into place.
        - e. Alter piping assembly to fit, when proper fit is not obtained.
        - f. Install eccentric reducers or increasers with the top horizontal for pump suction piping.

- D. Buried piping:
    - 1. Bury piping with minimum 3-foot cover without air traps, unless otherwise indicated on the Drawings.
    - 2. Where 2 similar services run parallel to each other, piping for such services may be laid in the same trench.
        - a. Lay piping with sufficient room for assembly and disassembly of joints, for thrust blocks, for other structures, and to meet separation requirements of public health authorities having jurisdiction.
    - 3. Laying piping:
        - a. Lay piping in finished trenches free from water or debris. Begin at the lowest point with bell ends up slope.
        - b. Place piping with top or bottom markings with markings in proper position.
        - c. Lay piping on an unyielding foundation with uniform bearing under the full length of barrels.
        - d. Where joints require external grouting, banding, or pointing, provide space under and immediately in front of the bell end of each section laid with sufficient shape and size for grouting, banding, or pointing of joints.
        - e. At the end of each day's construction, plug open ends of piping temporarily to prevent entrance of debris or animals.
    - 4. Concrete encase all buried pipe installed under concrete slabs or structures.

E. Venting piping under pressure:
   1. Lay piping under pressure flat or at a continuous slope without air traps, unless otherwise indicated on the Drawings.
   2. Install plug valves as air bleeder cocks at high points in piping.
      a. Provide 1-inch plug valves for water lines, and 2-inch plug valves for sewage and sludge lines, unless otherwise indicated on the Drawings.
   3. Provide additional pipe taps with plug cocks and riser pipes along piping as required for venting during initial filling, disinfecting, and sampling.
   4. Before piping is placed into service, close plug valves and install plugs. Protect plugs and plug valves from corrosion in as specified in Section 09960 - High-Performance Coatings.

F. Restraining piping:
   1. Restrain piping at valves and at fittings where piping changes direction, changes sizes, and at ends:
      a. When piping is underground, use concrete thrust blocks, mechanical restraints, or push-on restraints.
      b. When piping is aboveground or underwater, use mechanical or structural restraints.
      c. Determine thrust forces by multiplying the nominal cross-sectional area of the piping by design test pressure of the piping.
   2. Provide restraints with ample size to withstand thrust forces resulting from test pressures:
      a. During testing, provide suitable temporary restraints where piping does not require permanent restraints.
   3. Place concrete thrust blocks against undisturbed soil.
   4. Place concrete so piping joints, fittings, and other appurtenances are accessible for assembly and disassembly.
   5. Provide underground mechanical restraints where specified in the Piping Schedule.

G. Connections to existing piping:
   1. Refer to PCU USSM, latest revision for additional requirements.
   2. Expose existing piping to which connections are to be made with sufficient time to permit, where necessary, field adjustments in line, grade, or fittings:
      a. Protect domestic water/potable water supplies from contamination:
         1) Make connections between domestic water supply and other water systems in accordance with requirements of public health authorities.
         2) Provide devices approved by Owner of domestic water supply system to prevent flow from other sources into the domestic supply system.
   3. Make connections to existing piping and valves after sections of new piping to be connected have been tested and found satisfactory.
   4. Provide sleeves, flanges, nipples, couplings, adapters, and other fittings needed to install or attach new fittings to existing piping and to make connections to existing piping.
   5. For flanged connections, provide stainless steel bolts with isolation bushings and washers, and full-face flange gaskets.

H. Connections to in-service piping:
   1. As specified in Section 01140 - Work Restrictions.

I. Connections between ferrous and nonferrous metals:
   1. Connect ferrous and nonferrous metal piping, tubing, and fittings with dielectric couplings especially designed for the prevention of chemical reactions between dissimilar metals.
   2. Nonferrous metals include aluminum, copper, and copper alloys.

J. Flanged connections between dissimilar metals such as ductile iron pipe and steel pipe:
   1. Provide stainless steel bolts with isolation bushings and washers, and full-face flange gaskets.

3.02 CLEANING

A. Piping cleaning:
   1. Upon completion of installation, clean piping interior of foreign matter and debris.
   2. Perform special cleaning when required by the Contract Documents.

B. Cleaning potable water piping:
   1. Flush and disinfect potable water piping as specified in Section 01757 - Disinfection and PCU USSM, latest edition.

C. Cleaning and drying of dry chlorine gas or liquid chlorine piping:
   1. Coordinate with Owner and attend a pre-cleaning meeting with Owner before cleaning chlorine piping.
   2. Work with Owner during cleaning and conform to plant operational and shut down constraints.
   3. Clean chlorine pressure piping in accordance with the requirements of the Chlorine Institute-Pamphlet 6 and meet the following requirements.
   4. Do not put water into any of the chlorine gas or liquid piping.
   5. Blow chlorine piping clean of loose debris with compressed air at 4,000 feet per minute.
   6. Clean chlorine piping by pulling clean cloths saturated with an approved solvent through piping:
      a. Do not use hydrocarbons or alcohols that may react with chlorine.
      b. Use solvents in accordance with manufacturer's safety recommendations to avoid serious physiological effects.
      c. Remove all dirt and debris of any nature from the chlorine lines.
   7. Disassemble and clean valves and equipment that have oil residues before installation.
   8. Dry piping immediately before effecting final connections for service.
      a. Keep piping sealed to prevent moisture from entering chlorine piping.
      b. Supply compressors, air dryers, and dew point testing equipment necessary to dry and test for dryness the new chlorination system piping.
      c. Drying procedure:
         1) Pass dry commercial grade nitrogen gas that has a dew point of minus 40 degrees Fahrenheit or less through the piping until exhausted air at three Engineer-approved locations has a dew point of minus 40 degrees Fahrenheit.
         2) Confirm dew point with a hygrometer.
         3) Allow several hours for drying piping.

        4) Re-dry the chlorine piping system in the event subsequent work opens any part of the system to the atmosphere.

D. Cleaning chlorine piping:
  1. Clean chlorine piping by pulling clean cloths saturated an approved solvent through piping:
    a. Do not use hydrocarbons or alcohols that may react with chlorine.
    b. Use solvents in accordance with manufacturer's safety recommendations to avoid serious physiological effects.
  2. Disassemble and clean valves and equipment that have oil residues before installation.
  3. Dry piping immediately before effecting final connections for service.
    a. Keep piping kept sealed to prevent moisture from entering chlorine piping.
    b. Drying procedure shall be as follows:
      1) Pass steam through piping from the high end until piping is thoroughly heated. While steaming, allow condensate and foreign matter to drain out.
      2) Stop steaming and drain pockets and low points.
      3) While piping is hot, blow dry air through piping until piping is dry.
        a) Use dry air with a dew point of minus 40 degrees Fahrenheit or below.
      4) Continue blowing dry air through piping until exhausted air has a dew point of minus 30 degrees Fahrenheit or below.
      5) Allow several hours for drying piping.

3.03 COMMISSIONING

A. As specified in Section 01756 - Commissioning and this Section.

B. Functional testing:
  1. Piping systems:
    a. Owner and/or Engineer Witnessed.
    b. Conduct pressure and leak test, as specified.
    c. Conduct flushing and disinfection testing for potable water mains, as specified.

3.04 PIPING SCHEDULE

A. Refer to the flow stream identification in the following table:

ID	Service	Diameter (inches)	Material	Pressure Class	Pipe Spec Section	Joints/ Fittings	Test Pressure	Lining	Coating	Notes
CLS	**Sample Piping**									
	Aboveground/ Underground	¼ - 1	PVC	Sch 80	15249	SW or SCRD	150 psig/HH	--	ACR-PVC-1	Potable water sample piping, Refer to Notes 1, 2, 3, and 4. Coat aboveground with specified coating system.
DR	**Drains**									
DR-1	Underground	2 - 4	PVC	Sch 80	15249	SW or SCRD	Gravity	--	--	Drain piping for air release/sample piping. Refer to Notes 2, 3, and 4.
DR-2	Underground	4 - 6	PVC	C900 DR-18	15244	RMJ	Gravity	-	--	Drain piping for GSR. Refer to Notes 1, 2, 3, and 4.
DR-3	Aboveground/ Under GSR	4 - 6	DI	CL 350	15211	RMJ	Gravity	Cement Mortar	--	Drain piping for GSR. Refer to Notes 1, 2, 3, and 4.
FM	**Force Main**	1 - 3	PVC	Sch 80	15249	SW or SCRD 30	Psig/LH	--	--	Onsite wastewater PS. Refer to Notes, 2, 3, and 4.
FW	**Finished Water Piping**									
FW-1	Aboveground	4 - 24	DI	CL 53	15211	FL	150 psig/HH	Cement Mortar	EPU-M-1	Potable finish water to distribution, Refer to notes 1, 2, 3 and 4.
FW-2	Underground	4 - 16	PVC	C900 DR 18 / C905 DR 14	15244	RMJ	150 psig/HH	--	--	Potable finish water to distribution, Refer to notes 1, 2, 3 and 4.
FW-3	Underground	4 - 24	DI	CL 250	15211	RMJ	150 psig/HH	Cement Mortar	EPU-M-1	Potable finish water to distribution, Refer to notes 1, 2, 3 and 4.
FW-4	Aboveground	4 - 24	DI	CL 250	15211	RMJ	150 psig/HH	Cement Mortar	EPX-M-2-PWS	Potable finish water in GSR, Refer to notes 1, 2, 3 and 4.
OFL	**Overflow**	2 - 6	PVC	Sch 80	15249	SW	Gravity	--	ACR-PVC-1	Sodium hypochlorite tank overflow. Refer to notes 1, 2, 3 and 4.
PW	**Potable Water Piping**									
PW-1	Underground	4 - 12	DIP	CL 350	15211	RMJ	150 psig/HH	Cement Mortar	--	On-site potable water system. Refer to Notes 1, 2, 3 and 4.
PW-2	Underground	4 - 12	PVC	C900 DR 18	15244	RMJ	150 psig/HH	--	--	On-site potable water system. Refer to Notes 1, 2, 3 and 4.

ID	Service	Diameter (inches)	Material	Pressure Class	Pipe Spec Section	Joints/ Fittings	Test Pressure	Lining	Coating	Notes
PW-3	Underground	1/2 - 2	PVC	Sch 80	15249	SW or SCRD	150 psig/HH	--	--	On-site potable water system. Refer to Notes 1, 2, 3 and 4.
PW-4	Aboveground	½-2	SST	Sch 40S	15286	SCRD	150 psig/HH	--	--	On-site potable water system. Refer to Notes 1, 2, 3 and 4.
RW	**Raw Water Piping**									
RW-1	Aboveground	4 - 16	DI	CL 53	15211	FL	150 psig/HH	Cement Mortar	EPU-M-1	Raw groundwater system. Refer to Notes 1, 2, 3 and 4.
RW-2	Underground	4 - 16	PVC	C900 DR 18 / C905 DR 14	15244	RMJ	150 psig/HH	--	--	Raw groundwater system. Refer to Notes 1, 2, 3 and 4
RW-3	Underground	4 - 16	DI	CL 250	15211	RMJ	150 psig/HH	Cement Mortar	EPX-M-2-PWS	Raw groundwater in GSR, Refer to Notes 1, 2, 3 and 4.
RW-4	Aboveground in GSR	8 - 20	HDPE	SDR 9	15241	Weld	30 psig/LH	--	--	Raw groundwater in GSR. Refer to Notes 1, 2, 3, and 4.
SH	**Sodium Hypochlorite**									
SH-1	Aboveground	3/8 - 4	PVC	Sch 80	15249	SW or SCRD	150 psig/HH	--	ACR-PVC-1	Aboveground sodium hypochlorite system piping. Refer to notes 1, 2, 3, and 4.
SH-2	Aboveground/ Underground	2 - 4	PVC	Sch 40	15293	SW or SCRD	30 psig/LH	--	ACR-PVC-1	Aboveground sodium hypochlorite system piping. Refer to notes 1, 2, 3, 4 and 5. Coat only aboveground piping.
SH-3	Aboveground/ Underground	3/8-1	PVC	Braded Tubing	15238	15238	100 psig/HH	--	--	

Notes:

(1) Provide NSF approval for all piping that will be in contact with potable or raw water. Disinfect piping in accordance with Section 01757.

(2) Provide coatings in accordance with Section 09960 - High-Performance Coatings.

(3) All piping systems shall be mechanically restrained, except for the DR-1 piping system and unless otherwise noted.

(4) Refer to the individual piping sections for additional requirements.

(5) All underground SH piping shall be dual contained with SCH 40 PVC. The underground SH piping from Process 80 to Process 40 - injection assembly 1 shall be dual contained with 4-inch diameter schedule 40 PVC and carrier tubing (SH-3). The underground SH piping from Process 80 to Process 50 - assembly 2 shall be dual contained with 4-inch diameter schedule 40 PVC and carrier tubing (SH-3). All containment piping shall be routed to minimize bends and if bends are used shall be 45-degree or long radius 90-degree bends. Refer to drawing details for transition points and additional materials.

END OF SECTION

SECTION 15061

PIPE SUPPORTS

PART 1 GENERAL

1.01 SUMMARY

A. Section includes: Supports for pipe, fittings, valves, and appurtenances.

1.02 REFERENCES

A. ASTM International (ASTM):
   1. A123 - Standard Specification for Zinc (Hot-Dip Galvanized) Coatings on Iron and Steel Products.
   2. A380 - Standard Practice for Cleaning, Descaling, and Passivation of Stainless Steel Parts, Equipment, and Systems.
   3. A967 - Standard Specification for Chemical Passivation Treatments for Stainless Steel Parts.

B. Manufacturer's Standardization Society (MSS):
   1. SP-58 - Pipe Hangers and Supports - Materials, Design, and Manufacture.

1.03 SUBMITTALS

A. Submit as specified in Section 01330 - Submittal Procedures.

B. Product data:
   1. Design features.
   2. Load capacities.
   3. Material designations by UNS alloy number or ASTM Specification and Grade.
   4. Data needed to verify compliance with the Specifications.
   5. Catalog data.
   6. Clearly mark submittal information to show specific items, materials, and accessories or options being furnished.

1.04 WARRANTY

A. Provide warranty as specified in Section 01783 - Warranties and Bonds.

PART 2 PRODUCTS

2.01 GENERAL

A. As specified in Section 01600 - Product Requirements.

B. Not all pipe supports or hangers required are shown in the Drawings. Provide pipe supports for every piping system installed. Support piping by pipe support where it connects to pumps or other mechanical equipment.

C. Pipe support and hanger components shall withstand the dead loads imposed by the weight of the pipes fittings, and valves (all filled with water), plus valve actuators and any insulation, and shall have a minimum safety factor of five based on material ultimate strength.

2.02 MATERIALS

A. General:
  1. Hot dip galvanized:
    a. Fabricate as specified in Section 05120 - Structural Steel.
    b. Hot dip after fabrication of support in accordance with ASTM A123.
    c. Repair galvanized surface as specified in Section 05120 - Structural Steel.
  2. Stainless steel.
    a. Fabricate as specified in Section 05120 - Structural Steel.
    b. Finish requirements: Remove free iron, heat tint oxides, weld scale, and other impurities, and obtain a passive finished surface.
    c. At the shop, perform pickling and passivation on all surfaces inside and out in accordance with ASTM A380 or A967.
      1) Passivation treatments using citric acid are not allowed.
    d. Field welding is prohibited.

B. Outdoor areas: Areas exposed to the natural outdoor environment:
  1. Pipe support material shall be hot dip galvanized in accordance with Part 2.02.A.1, unless otherwise indicated on the Drawings.
  2. Pipe support material for stainless steel piping shall be stainless steel in accordance with Part 2.02.A.2.

C. Indoor areas: Areas exposed to an indoor environment including galleries and tunnels:
  1. Pipe support material shall be hot dip galvanized in accordance with Part 2.02.A.1, unless otherwise indicated on the Drawings.
  2. Pipe support material for stainless steel piping shall be stainless steel in accordance with Part 2.02.A.2.

D. Submerged, 3 feet or less above water level in a structure, or inside a water bearing structure:
  1. Pipe support material shall be stainless steel in accordance with Part 2.02.A.2.

E. Chemical containment areas and chemical piping:
  1. As indicated on the Drawings and identified in Section 15063.

F. Fasteners:
  1. As specified in Section 05120 - Structural Steel.

2.03 PIPE SUPPORTS

A. Hanger rods: Sized to match suspended pipe hanger, or as indicated on the Drawings:
  1. Manufacturers: One of following or equal:
    a. For stainless steel piping:
      1) Bergen-Power, Figure 133.
      2) Nibco-Tolco, Figure 103.

    b. For all other piping, unless indicated on the Drawings:
        1) Anvil International, Figure 140.
        2) Bergen-Power, Figure 133.
        3) Cooper B-Line Systems, Inc., Figure B3205.

B. Hanger rods, continuously threaded: Sized to match suspended pipe hanger, or as indicated on the Drawings:
  1. Manufacturers: One of the following or equal:
    a. For stainless steel piping:
        1) Bergen-Power, Figure 94.
        2) FM Stainless Fasteners.
    b. For steel and ductile iron piping:
        1) Anvil International, Figure 146.
        2) Bergen-Power, Figure 94.

C. Eye bolts:
  1. For stainless steel piping:
    a. Type 316 stainless steel welded and rated equal to full load capacity of rod.
  2. For all other piping, unless indicated on the Drawings:
    a. Welded and rated equal to full load capacity of rod.

D. Welded eyebolt rod:
  1. Manufacturers: One of the following or equal:
    a. For stainless steel piping:
        1) Nibco-Tolco, Figure 101.
        2) FM Stainless Fasteners.
    b. For all other piping, unless indicated on the Drawings:
        1) Anvil International, Figure 278.
        2) Bergen-Power, Figure 93.
        3) Cooper B-Line Systems, Inc., Figure B3210.

E. Adjustable ring hangers: MSS SP-58, Type 7 or Type 9 (system dependent):
  1. Manufacturers: One of the following or equal:
    a. For stainless steel piping:
        1) Nibco-Tolco, Figure 1C.I.
        2) Bergen-Power, Figure 100SS.
    b. For all other piping, unless indicated on the Drawings:
        1) Anvil International, Figure 97.
        2) Cooper B-Line Systems, Inc., Figure B3172.

F. Adjustable clevis hangers: MSS SP-58, Type 1:
  1. Manufacturers: One of the following or equal:
    a. For stainless steel piping:
        1) Cooper B-Line Systems, Inc., Figure B3100 or B3102.
        2) FM Stainless Fasteners, Figure 60.
    b. For all other piping, unless indicated on the Drawings:
        1) Anvil International, Figure 260 or Figure 590.
        2) Bergen-Power, Figure 100.
        3) Cooper B-Line Systems, Inc., Figure B3100 or B3102.

G. Adjustable clevis hangers for insulated pipe: Oversize:
   1. Manufacturers: One of the following or equal:
      a. For stainless steel piping:
         1) Nibco-Tolco, Figure 1A.
      b. For all other piping, unless indicated on the Drawings:
         1) Anvil International, Figure 300.
         2) Bergen-Power, Figure 100EL.
         3) Cooper B-Line Systems, Inc. Figure B3108.

H. Single rod hangers for steam pipe: MSS SP-58, Type 43; malleable iron or steel yoke and roller hangers; swivel to allow rotation of yoke on rod:
   1. Manufacturers: One of the following or equal:
      a. For stainless steel piping:
         1) Nibco-Tolco, Figure 324.
         2) Cooper B-Line Systems, Inc., Figure B3110.
         3) FM Fasteners, Figure 81.
      b. For all other piping, unless indicated on the Drawings:
         1) Anvil International, Figure 181.
         2) Cooper B-Line Systems, Inc., Figure B3110.

I. Double rod hangers for steam pipe: MSS SP-58, Type 41:
   1. Manufacturers: One of the following or equal:
      a. For stainless steel piping:
         1) FM Stainless Fasteners, Figure 71.
      b. For all other piping, unless indicated on the Drawings:
         1) Anvil International, Figure 171.
         2) Cooper B-Line Systems, Inc., Figure B3114.

J. Brackets: MSS SP-58, Type 32 with back plate; rated for 1,500 pounds:
   1. Manufacturers: One of the following or equal:
      a. For stainless steel piping:
         1) Nibco-Tolco, Figure 30M.
         2) Cooper B-Line Systems, Inc., Figure B3066.
         3) FM Stainless Fasteners, Figure 98.
      b. For all other piping, unless indicated on the Drawings:
         1) Anvil International, Figure 195.
         2) Cooper B-Line Systems, Inc., Figure B3066.

K. Brackets, heavy duty: MSS SP-58, Type 33 with back plate; rated for 3,000 pounds:
   1. Manufacturers: One of following or equal:
      a. Anvil International, Figure 199.
      b. Cooper B-Line Systems, Inc., Figure B3067.

L. Standard U-bolt: MSS SP-58, Type 24:
   1. Manufacturers: One of the following or equal:
      a. For stainless steel piping:
         1) Nibco-Tolco, Figure 110.
         2) Cooper B-Line Systems, Inc., Figure B3188.
         3) FM Stainless Fasteners, Figure 37.
      b. For all other piping, unless indicated on the Drawings:
         1) Anvil International, Figure 137.
         2) Bergen-Power, Figure 283.
         3) Cooper B-Line Systems, Inc., Figure B3188.

M. Riser clamps: MSS SP-58, Type 8:
  1. Manufacturers: One of the following or equal:
     a. For stainless steel piping:
        1) Cooper B-Line Systems, Inc., Figure B3373.
        2) FM Stainless Fasteners, Figure 61.
     b. For all other piping, unless indicated on the Drawings:
        1) Anvil International, Figure 261.
        2) Bergen-Power, Figure 126.
        3) Cooper B-Line Systems, Inc., Figure B3373.

N. Pipe clamps: MSS SP-58, Type 4:
  1. Manufacturers: One of the following or equal:
     a. For stainless steel piping:
        1) Nibco-Tolco, Figure 4.
        2) Cooper B-Line Systems, Inc., Figure 3140.
     b. For all other piping, unless indicated on the Drawings:
        1) Anvil International, Figure 212.
        2) Bergen-Power, Figure 175.
        3) Cooper B-Line Systems, Inc., Figure B3140.

O. Adjustable offset pipe clamp:
  1. Manufacturers: One of the following or equal:
     a. For stainless steel piping:
        1) Nibco-Tolco, Figure 4.
        2) Cooper B-Line Systems, Inc., Figure B3149.
        3) FM Stainless Fasteners, Figure 63.
     b. For all other piping, unless indicated on the Drawings:
        1) Anvil International, Figure 100.
        2) Cooper B-Line Systems, Inc., Figure B3149.

P. Offset pipe clamp:
  1. Manufacturers: One of the following or equal:
     a. For stainless steel piping:
        1) Nibco-Tolco, Figure 8.
        2) Cooper B-Line Systems, Inc., Figure 3148.
     b. For all other piping, unless indicated on the Drawings:
        1) Anvil International, Figure 103.
        2) Cooper B-Line Systems, Inc., Figure B3148.

Q. Floor stand or stanchion saddles: MSS SP-58, Type 37. Provided with U-bolt hold down yokes:
  1. Manufacturers: One of the following or equal:
     a. For stainless steel piping:
        1) Nibco-Tolco, Figure 318.
        2) FM Stainless Fasteners, Figure 59.
     b. For all other piping, unless indicated on the Drawings:
        1) Anvil International, Figure 259.
        2) Bergen-Power, Figure 125.
        3) Cooper B-Line Systems, Inc., Figure B3090.
     c. Threaded pipe stand support stanchion. Match pipe support material.
        1) Anvil International, Figure 63T.
        2) Bergen-Power, Figure 138.
        3) Cooper B-Line Systems Inc., Figure B3088ST.

R. Spring hangers:
   1. Manufacturers: One of the following or equal:
      a. For stainless steel piping:
         1) Bergen-Power, Figure 920.
      b. For all other piping, unless indicated on the Drawings:
         1) Anvil International, Figure B-268, Type G.
         2) Bergen-Power, Figure 920.

S. One-hole pipe clamps:
   1. Manufacturers: One of the following or equal:
      a. For stainless steel piping:
         1) Not used.
      b. For all other piping:
         1) Anvil International, Figure 126.
         2) Carpenter & Paterson, Figure 237S.

T. Welded beam attachment: MSS SP-58, Type 22:
   1. Manufacturers: One of the following or equal:
      a. For stainless steel piping:
         1) Nibco-Tolco, Figure 304.
         2) Cooper B-Line Systems, Inc., Figure 3083.
      b. For all other piping, unless indicated on the Drawings:
         1) Anvil International, Figure 66.
         2) Bergen-Power, Figure 113A or 113B.
         3) Cooper B-Line Systems, Inc., Figure B3083.

U. Heavy pipe clamp: MSS SP-58, Type 4:
   1. Manufacturers: One of the following or equal:
      a. For stainless steel piping:
         1) Nibco-Tolco, Figure 4H.
      b. For all other piping, unless called out otherwise on the Drawings:
         1) Anvil International, Figure 216.
         2) Bergen-Power, Figure 298.

V. PTFE pipe slide assembly: MSS SP-58, Type 35 with lateral and vertical restraint:
   1. Manufacturers: One of the following or equal:
      a. For stainless steel piping:
         1) Nibco-Tolco, Figure 426.
      b. For all other piping, unless indicated on the Drawings:
         1) Anvil International, Figure 257, Type 3.
         2) Cooper B-Line Systems, Inc., Figure B3893.

W. Anchor bolts, concrete anchors, concrete inserts, powder-actuated fasteners, and sleeve anchors: As specified in Section 05120 - Structural Steel.

PART 3 EXECUTION

3.01 INSTALLATION

A. Support, suspend, or anchor exposed pipe, fittings, valves, and appurtenances to prevent sagging, overstressing, or movement of piping; and to prevent thrusts or loads on or against connected pumps, blowers, and other equipment.

B. Field verify support location, orientation, and configuration to eliminate interferences prior to fabrication of supports.

C. Carefully determine locations of inserts. Anchor to formwork prior to placing concrete.

D. Use flush shells only where indicated on the Drawings.

E. Do not use anchors relying on deformation of lead alloy.

F. Do not use powder-actuated fasteners for securing metallic conduit or steel pipe larger than 1 inch to concrete, masonry, or wood.

G. Suspend pipe hangers from hanger rods and secure with double nuts.

H. Install continuously threaded hanger rods only where indicated on the Drawings or specified herein.

I. Use adjustable ring hangers or adjustable clevis hangers, for 4 inch and smaller diameter pipe.

J. Use adjustable clevis hangers for pipe larger than 4 inches in diameter.

K. Secure pipes with double nutted U-bolts or suspend pipes from hanger rods and hangers.
    1. For stainless steel piping, use stainless steel U-bolts.
    2. For all other piping, use galvanized U-bolts.

L. Support spacing:
    1. Support 2-inch and smaller piping on horizontal and vertical runs at maximum 5 feet on center, unless otherwise specified or shown on the Drawings.
    2. Support larger than 2-inch piping on horizontal and vertical runs at maximum 10 feet on center, unless otherwise specified or shown on the Drawings.
    3. Support exposed polyvinyl chloride and other plastic pipes at maximum 5 feet on center, regardless of size.
    4. Support tubing, PVC pipe 1-inch and smaller, copper pipe and tubing, fiber-reinforced plastic pipe or duct, and rubber hose and tubing at intervals close enough to prevent sagging greater than 1/4 inch between supports.
    5. Do not suspend or support valves, pipe, and fittings from another pipe or conduit.

M. Install supports at:
    1. Any change in direction.
    2. Both sides of flexible pipe connections.
    3. Base of risers.
    4. Floor penetrations.
    5. Connections to pumps, blowers, and other equipment.
    6. Valves and appurtenances.

N. Securely anchor plastic pipe, valves, and headers to prevent movement during operation of valves.

O. Anchor plastic pipe between expansion loops and direction changes to prevent axial movement through anchors.

P. Provide elbows or tees supported from floors with base fittings where indicated on the Drawings and specified herein.

Q. Support base fittings with metal supports or when indicated on the Drawings support on concrete piers.

R. Do not use chains, plumbers' straps, wire, or similar devices for permanently suspending, supporting, or restraining pipes.

S. Support plumbing drainage and vents in accordance with Florida Building Code.

T. Supports, clamps, brackets, and portions of support system bearing against copper pipe: Copper plated, copper throughout, or isolated with neoprene or polyvinyl chloride tape.

U. Where pipe is insulated, install over-sized supports and hangers.

V. Install insulation shield in accordance with MSS SP-58, Type 40. Shield shall be galvanized steel unless otherwise specified or indicated on the Drawings.

W. Install riser clamps at floor penetrations and where indicated on the Drawings.

X. Coat support system components as specified in Section 09960 - High-Performance Coatings. Do not coat stainless steel pipe supports.

END OF SECTION

SECTION 15063

NON-METALLIC PIPE SUPPORT SYSTEM

PART 1 GENERAL

1.01 SUMMARY

A. Section includes: Non-metallic pipe support system including the following:
   1. Channel framing, and components.
   2. Pipe clamps.
   3. Fittings.
   4. Fasteners.

1.02 REFERENCES

A. ASTM International (ASTM):
   1. E84 - Test Method for Surface Burning Characteristics of Building Materials.

1.03 SYSTEM DESCRIPTION

A. Design responsibility:
   1. The manufacturer of the non-metallic pipe support system shall be considered the designer of the support system.
   2. Prepare design calculations utilizing the design criteria included in these Specifications.
   3. Prepare detailed shop drawings illustrating the layout of the support system and identifying the components of the support system.

B. Design requirements:
   1. Include live, dead, and additional loads associated with piping, valves, and appurtenances. Consider the content of the pipes in load calculations.
   2. Maximum allowable deflection: 1/240 of span.
   3. Allowable column loads: As recommended by manufacturer in published instruction for column's unsupported height and "K" value for calculating effective column length of not less than 1.0.
   4. Future loads:
      a. Support systems indicated on the Drawings may include spaces intended to accommodate future pipes.
      b. Assume such spaces are occupied by 6-inch diameter ductile iron pipes. Only the number of pipes that would physically fit into the space need be considered.
      c. Include the weight of the pipe contents in determining future loads. Assume pipe contents are water.
   5. Wind design criteria: As specified in Section 01614.
   6. Spacing of supports: As required to comply with design requirements but not more than 5 feet.

1.04 SUBMITTALS

A. Submit as specified in Section 01330 - Submittal Procedures.

B. Shop drawings.

C. Calculations.

1.05 QUALITY ASSURANCE

A. Supply materials from a single manufacturer with sole responsibility for the pipe support system.

B. The supplied system, including pipe clamps, shall be interchangeable with industry standard 1-5/8-inch steel and fiberglass channel framing systems.

1.06 DELIVERY, STORAGE, AND HANDLING

A. Transportation, handling, storage, and installation shall be in accordance with the manufacturer′s printed instructions.

PART 2 PRODUCTS

2.01 MANUFACTURERS

A. One of the following or equal:
   1. StrutTech, Redmond, Washington.
   2. Unistrut, Wayne, Michigan.

2.02 MATERIALS

A. Fiberglass resin: Corrosion-resistant premium grade vinylester.

B. Injection molded components: Polyurethane thermoplastics.

C. Flame spread of fiberglass:
   1. Vinylester fiberglass (Series VF): Class 1, ASTM E84.
   2. Polyurethane: V-O UL 94V.

D. Physical properties of fiberglass:

	Longitudinal	**Transverse**
Tensile Strength	37,500 pounds per square inch, (psi)	10,000 pounds per square inch, (psi)
Tensile Modules	3.0×10^6 psi	1.0×10^6 psi
Flexural Strength	37,500 psi	14,000 psi
Flexural Modules	2.0×10^6 psi	1.0×10^6 psi
Compressive Strength	37,500 psi	20,000 psi
Shear Strength	6,000 psi	5,500 psi
Izod Impact	30 foot-pounds per square inch	5 foot-pounds per square inch

E. Surface veil: Fiberglass channel shall have polyester surface veil over 100 percent of the surface to provide protection against degradation from ultraviolet light.

F. Touch-up resin:
  1. Manufacturers: The following or equal:
     a. Krylon, 7006-Satin Polyurethane Clear Finish.

2.03 COMPONENTS

A. Channel framing:
  1. All channel framing shall be supplied with integral notches 1 inch on center.
  2. Locate notches on interior flange to prevent slippage of pipe clamps and fittings after installation.

B. Pipe clamps:
  1. Adjustable type: Non-metallic and non-conductive.
  2. Fixed type:
     a. Pipe clamps for pipe less than 6 inches in diameter shall be non-metallic and non-conductive.
     b. Pipe clamps for pipe equal to and greater than 6 inches in diameter shall be fiberglass.

C. Channel fittings:
  1. Make fittings and post bases from glass-filled polyurethane or polyester.

D. Fasteners:
  1. Make fasteners from one of the following materials:
     a. Glass-filled polyurethane.
     b. Vinylester fiberglass.

PART 3 EXECUTION

3.01 INSTALLATION

A. General:
  1. Install in accordance with manufacturer′s instructions, shop drawings, and as indicated on the Drawings.
  2. Seal machined edges and holes with touch-up resin.

END OF SECTION

THIS PAGE INTENTIONALLY LEFT BLANK

SECTION 15075

EQUIPMENT IDENTIFICATION

PART 1 GENERAL

1.01 SUMMARY

A. Section includes:
   1. Equipment nameplates.
   2. Special items.

1.02 SUBMITTAL

A. Submit as specified in Section 01330 - Submittal Procedures.

B. Shop drawings:
   1. Product data.
   2. Installation instructions.

C. Samples.

1.03 QUALITY ASSURANCE

A. Regulatory requirements: Comply with applicable local, state, and federal regulations.

PART 2 PRODUCTS

2.01 EQUIPMENT NAMEPLATES

A. Material and fabrication:
   1. Stainless steel sheet engraved or stamped with text, holes drilled, or punch for fasteners.

B. Fasteners:
   1. Number 4 or larger oval head stainless steel screws or drive pins.

C. Text:
   1. Manufacturer’s name, equipment model number and serial number, identification tag number; and when appropriate, drive speed, motor horsepower with rated capacity, pump rated total dynamic head, and impeller size.

2.02 SPECIAL ITEMS

A. In addition, special coating of following items will be required:

Item	Color
Valve handwheels and levers	Per PCU USSM
Hoist hooks and blocks	Yellow and black stripes
Steel guard posts	In accordance with standard details

B. Paint minimum 2 inches high numbers on or adjacent to accessible valves, pumps, flowmeters, and other items of equipment which are indicated on the Drawings or in Specifications by number.

PART 3 EXECUTION

3.01 EXAMINATION

A. Verify satisfactory conditions of substrate for applying identification.

B. Verify that conditions are satisfactory for installation and application of products as specified in Section 01600 - Product Requirements.

3.02 PREPARATION

A. Prepare and coat surfaces of special items as specified in Section 09960 - High-Performance Coatings.

B. Prepare surface in accordance with product manufacturer's instructions.

END OF SECTION

SECTION 15076

PIPE IDENTIFICATION

PART 1 GENERAL

1.01 SUMMARY

A. Section includes: Pipe identification including the following:
   1. Pipe identification by color and legend.
   2. Underground warning tape.
   3. Tracer wire.
   4. Witness markers.
   5. Valve identification.

1.02 REFERENCES

A. American Society of Mechanical Engineers (ASME):
   1. A13.1 - Scheme for the Identification of Piping Systems.

1.03 SUBMITTALS

A. Submit as specified in Section 01330 - Submittal Procedures.

B. Submit following:
   1. Product data.
   2. Samples.
   3. Manufacturer's installation instructions.
   4. Submit following as specified in Section 01770 - Closeout Procedures:
      a. Operation and Maintenance Data.
      b. Warranty.

PART 2 PRODUCTS

2.01 ABOVE GROUND AND IN-CHASE PIPE IDENTIFICATION

A. Manufacturers:
   1. Per PCU USSM.

B. Materials:
   1. Pipe markers: Self-adhesive vinyl, suitable for outdoor application from -40 degrees to 180 degrees Fahrenheit; in accordance with ASME A13.1 requirements.
      a. Lettering: Per PCU USSM.
      b. Marker colors: Per PCU USSM.
   2. Coating: As specified in Section 09960 - High-Performance Coatings.

2.02 BURIED PIPELINE IDENTIFICATION

A. Underground warning tape:
   1. Manufacturer: Per PCU USSM.
   2. Material: Per PCU USSM.

B. Tracer wire:
   1. Manufacturers: One of the following or equal:
      a. Kris-Tech Wire.
      b. Corrpro.
   2. Materials: One of the following or equal:
      a. Solid copper conductor with 30 mil HMWPE.
      b. 10 gauge or thicker wire.
      c. Match insulation color to the color of the pipe being installed.

C. Witness markers:
   1. Manufacturers: One of the following or equal:
      a. Carsonite Composites, Utility Marker.
      b. Hampton Technical Associates, Inc.
   2. Materials:
      a. Glass fiber and resin reinforced thermosetting composite material.
      b. UV resistant.
   3. Constructed as a single piece.
   4. Pointed at the bottom end.
   5. Information to be included on the marker: Per PCU USSM.

D. Ball Markers:
   1. Manufacturer: 3M or equal
   2. Model: XR/ID ball marker or equal.
   3. At a minimum, these ball markers should be placed at horizontal fittings and every 50 feet on straight runs.

2.03 VALVE IDENTIFICATION

A. The Contractor shall furnish and install tags for all valves and gates required for the Work per PCU USSM.

PART 3 EXECUTION

3.01 EXAMINATION

A. Verify satisfactory conditions of substrate for applying identification.

B. Verify that conditions are satisfactory for installation and application of products as specified in Section 01600 - Product Requirements.

3.02 PREPARATION

A. Prepare and coat surfaces as specified in Section 09960 - High-Performance Coatings.

B. Prepare surface in accordance with product manufacturer's instructions.

3.03 ABOVE GROUND AND IN-CHASE PIPING IDENTIFICATION

A. Identify exposed piping, valves, and accessories in accessible chases with lettering or tags designating service of each piping system with flow directional arrows and color code.

B. Color code:
   1. Paint all piping with colors as selected by Owner.

C. Lettering and flow direction arrows:
   1. Stencil lettering on painted bands or use Snap-On markers on pipe to identify pipe. When stenciling, stencil 3/4-inch-high letters on 3/4 through 4-inch pipe or coverings, or 5-inch high letters on 5-inch and larger pipe or coverings.
   2. Provide lettering and flow direction arrows near equipment served, adjacent to valves, both sides of walls and floors where pipe passes through, at each branch or tee, and at intervals of not more than 50 feet in straight runs of pipe.

D. Where scheduled, space 6-inch wide bands along stainless steel pipe at 10-foot intervals and other pipe at 5-foot intervals.

E. Label chemical tank fill pipelines at locations which are visible from chemical fill stations.

F. Metal tags:
   1. Where outside diameter of pipe or pipe covering is 5/8 inch or smaller, provide metal pipe identification tags instead of lettering.
   2. Fasten pipe identification tags to pipe with chain.
   3. Where tags are used, color code pipe as scheduled.

3.04 BURIED PIPING IDENTIFICATION

A. Underground warning tape:
   1. Place continuous run of warning tape in pipe trench, 12 inches above the pipe.

B. Tracer wire:
   1. Install on all non-metallic pipe.
   2. Install an electrically continuous run of tracer wire along the entire length of the pipe with wire terminations in valve boxes, vaults, or structures.
   3. Install tracer wire on top of the pipe and secure to pipe with tape a minimum of every 10 feet.
   4. Where approved by the Engineer, splice sections of wire together using approved direct bury wire nuts.
      a. Twisting the wires together is not acceptable.

C. Witness markers:
   1. Install over pipe in unpaved open-space areas at intervals not greater than 200 feet.
   2. Place markers at appurtenances located in unpaved areas.
   3. Embed markers at least 18 inches into the soil.

3.05 APPLICATION

A. Identify piping with legend markers, directional arrow markers, and number markers; use self-adhesive arrow roll tape to secure ends of piping markers and indicate flow direction.

B. Provide legend markers, directional arrow markers, and number markers where piping passes through walls or floors, at piping intersections and at maximum 15 foot spacing on piping runs.

C. Provide piping marker letters and colors as scheduled.

D. Place markers on piping so they are visible from operator's position in walkway or working platform near piping. Locate markers along horizontal centerline of pipe, unless better visibility is achieved elsewhere.

3.06 PIPING COLOR CODE AND MARKER SCHEDULE

A. Per PCU Standards in USSM.

END OF SECTION

SECTION 15082

PIPING INSULATION

PART 1 GENERAL

1.01 SUMMARY

A. Section includes: Insulation for piping and related systems that are not plumbing systems.

1.02 REFERENCES

A. American Association of State Highway and Transportation Officials (AASHTO):
   1. Standard Specifications for Highway Bridges.

B. ASTM International (ASTM):
   1. C177 - Standard Test Method for Steady-State Heat Flux Measurements and Thermal Transmission Properties by Means of the Guarded-Hot-Plate Apparatus.
   2. C518 - Standard Test Method for Steady-State Thermal Transmission Properties by Means of the Heat Flow Meter Apparatus.
   3. C533 - Standard Specification for Calcium Silicate Block and Pipe Thermal Insulation.
   4. C547 - Standard Specification for Mineral Fiber Pipe Insulation.
   5. C552 - Standard Specification for Cellular Glass Thermal Insulation.
   6. C795 - Standard Specification for Thermal Insulation for Use in Contact with Austenitic Stainless Steel.
   7. C929 - Standard Practice for Handling, Transporting, Shipping, Storage, Receiving, and Application of Thermal Insulation Materials for Use in Contact with Austenitic Stainless Steel.
   8. C1136 - Standard Specification for Flexible, Low Permeance Vapor Retarders for Thermal Insulation.
   9. E84 - Standard Test Method for Surface Burning Characteristics of Building Materials.
   10. E96 - Standard Test Methods for Water Vapor Transmission of Materials.

1.03 DEFINITIONS

A. Buried: Piping that is installed below buildings, foundations, or finish grade, either in soil or encased in concrete in soil.

B. Concealed: Piping above suspended ceilings and within walls, partitions, shafts, or service spaces and spaces not normally exposed to view but not buried.

C. Exterior: Piping that is installed outside a building or within a pipe trench or tunnel.

D. Flame spread and smoke density: Burning characteristics determined in accordance with ASTM E84.

E. Interior: Piping that is installed inside a building.

F. K factor: Thermal conductivity determined in accordance with ASTM C177 or C518.

G. Mineral fiber: Fibers manufactured of glass, rock, or slag processed from a molten state, with or without a binder.

H. Water vapor permeance: Water vapor transmission determined in accordance with ASTM E96 and expressed in units of perm-inch.

1.04 SUBMITTALS

A. Submit as specified in Section 01330 - Submittal Procedures.

B. Product data: As specified in Section 15050 - Common Work Results for Mechanical Equipment.
   1. Insulation properties: Include K factor, thickness, density, operating temperature limits, tensile strength, compressive strength, moisture absorption, flame spread, and smoke developed in accordance with ASTM E84 and corrosivity to stainless steel piping in accordance with ASTM C795.
   2. Jacket properties: Include covering material, cover thickness, tensile strength, tear strength, permeability in accordance with ASTM E96, flame spread, and smoke developed in accordance with ASTM E84, closure type or devices, and accessories.
   3. Insulating blankets: Include materials, performance characteristics, method of attaching to equipment, listing of locations where insulating blankets will be installed.
   4. Manufacturer's application instructions: Include assembly and application drawings and detailed instructions.
   5. Laboratory report: Provide certified laboratory report stating that insulation is not manufactured using chlorinated polymers and does not contain chlorides, bromides, sulfates, or fire-rated materials.

C. Provide warranty as specified in Section 01783 - Warranties and Bonds.

PART 2 PRODUCTS

2.01 PIPE INSULATION, GENERAL REQUIREMENTS

A. As specified in Section 01600 - Product Requirements.

B. Insulation thicknesses: Provide insulation thickness in inches in accordance with the following table. Insulation thickness shown is nominal. Manufacturing tolerance of 15 percent variation is permissible.

Table 1. Required Insulation Thicknesses

Required Insulation Thicknesses (inches)					
Service Temperature Range as Designated in Insulation Schedule at End of this Section	**Nominal Pipe Diameters**				
	1 inch and Less	**1.25 to 2 inches**	**2.5 to 4 inches**	**5 to 10 inches**	**Over 10 inches**
Above 200 degrees Fahrenheit	2.0	2.5	3.0	3.5	3.5
100 to 200 degrees Fahrenheit	1.5	1.5	1.5	2.0	2.5
40 to 100 degrees Fahrenheit	0.5	1.0	1.0	1.5	2.0
Below 40 degrees Fahrenheit	1.0	1.0	1.5	2.0	2.0
Heat Traced Pipes	1.0	1.0	1.0	1.5	2.0
Aeration Air Pipes	0.5	0.5	1.0	1.0	1.0

2.02 PIPE INSULATION

A. Insulation types: Provide in accordance with the insulation types listed and scheduled.

B. Insulation, Type 3:
   1. Insulation material: Rigid cellular glass in accordance with ASTM C552, Type II.
   2. Temperature range: Minus 450 degrees Fahrenheit to plus 900 degrees Fahrenheit.
   3. K factor at 75 degrees Fahrenheit: Not more than 0.32 BTU-inch/hour-square feet-degrees Fahrenheit.
   4. Minimum average density: 7.5 pounds per cubic foot.
   5. Maximum moisture absorption, volume percent: 5.
   6. Minimum compressive strength: 87 pounds per square inch.
   7. Moisture permeability: 0.00 perm-inch.
   8. Manufacturers: One of the following or equal:
      a. Owens- Corning, Foamglas® One™.

2.03 INSULATION JACKETS

A. Jacket, Type 1:
   1. Material: 28 ounces per square yard polyvinyl chloride on polyester fabric; total thickness 0.028-inch minimum.
   2. Fire rating: 25 maximum flame spread, smoke developed 50 or less.
   3. Color: As selected by the Engineer from manufacturer's standard colors.
   4. Overlap: 1-inch minimum at joints and fittings.
   5. Joint seal: Self-sealing lap tape.
   6. Fittings: Factory made with full thickness insulation.
   7. Manufacturers: The following or equal:
      a. Techlite® Insulation, 379 SSL Series.

B. Jacket, Type 2:
  1. Material: Ultraviolet-resistant polyvinyl chloride jacketing, 20 mil minimum thickness.
  2. Fire rating: 25 maximum flame spread, smoke developed 50 or less.
  3. Color: White.
  4. Overlap: 1-inch minimum at joints and fittings.
  5. Joint seal: PVC solvent welded or adhesive as recommended by the manufacturer.
  6. Fittings: Factory made with full thickness insulation.
  7. Manufacturers: One of the following or equal:
     a. Johns Manville, Zeston® 2000 PVC.
     b. Proto Corp., LoSMOKE PVC.
     c. Speedline® Corp., Smoke-Safe™ PVC.

C. Jacket, Type 3:
  1. Material: Aluminum, Alloy 5005; 0.016-inch (26-gauge) minimum thickness.
  2. Overlap: Overlap circumferential joints 4 inches minimum; overlap longitudinal joints 1-inch minimum; longitudinal joints oriented to minimize water entry.
  3. Bands: 0.5-inch wide, 0.0508-inch (16-gauge) thick aluminum, same alloy as jacket or 0.0179-inch thick Type 304 stainless steel; install on 18-inch centers, uniformly spaced and at all fitting joints.
  4. Joint seal: Apply waterproof adhesive at joints and overlaps.
  5. Fittings: Custom fit of same materials.
  6. Manufacturers: One of the following or equal:
     a. Childers Products.
     b. Premetco International.

2.04 VAPOR BARRIERS

A. Vapor barrier, Type 1:
  1. Material: White Kraft paper bound to aluminum foil in accordance with ASTM C1136, Type 1.
  2. Permeability: 0.02 perms or lower.
  3. Maximum flame spread rating: 25.
  4. Edge seal: Pressure-sensitive tape lap seal.
  5. Circumferential joints: 4-inch wide tape or 4-inch overlap with adhesive seal.

B. Vapor barrier, Type 2:
  1. Material: Mastic.
  2. Manufacturers: One of the following or equal:
     a. Benjamin Foster, No. 30-76.
     b. Insul-Coustic, No. I.C.-580.
     c. Foster Products, 36-10/46-10 Weatherite.
     d. Childers Products CP10/11 Vi-Acryl.

2.05 RELATED MATERIALS

A. Cover adhesive: Premium adhesive as recommended by the insulation cover supplier for heavy-duty service in corrosive, wet environments. Standard-duty adhesives are not permitted.

2.06 REMOVABLE INSULATING BLANKETS

A. In piping systems specified to be insulated, use removable insulating blankets for valves, meters, strainers, filters, catalytic converters, engine exhaust silencers, and other in-line piping appurtenances and equipment requiring periodic servicing.

B. Size limits: Use removable insulating blankets for equipment and piping appurtenances 3 inches in nominal size and larger. Insulate equipment and piping appurtenances less than 3 inches with molded sections of insulation or by field cutting insulation to conform to the shape of the component and to fit tightly around the component.

C. Manufacturers: One of the following, or equal:
   1. Thermal Energy Products, Inc., Energy Wrap.
   2. Accessible Products, Thermazip 2000 Jacket.
   3. Owens Corning, Temp-Mat.

D. Low temperature insulating blankets rated up to 800 degrees Fahrenheit:
   1. Use: For service temperatures up to 800 degrees Fahrenheit.
   2. Insulation: Fiberglass fiber, K factor 0.27 at 75 degrees Fahrenheit.
   3. Cover: 17-ounce fabric with both sides covered with silicone-impregnated glass cloth suitable for temperatures up to 800 degrees Fahrenheit.
   4. Cover fasteners: Use one of the following systems:
      a. Grommets in the blanket and stainless steel wire.
      b. 1-inch wide straps with stainless steel rectangular ring buckles and Velcro on strap tail.

E. High temperature insulating blankets rated up to 1,400 degrees Fahrenheit:
   1. Rated for sustained service temperatures up to 1,400 degrees Fahrenheit.
   2. Insulation: Ceramic fiber, K factor 0.50 at 600 degrees Fahrenheit, insulation material suitable for up to 2,300 degrees Fahrenheit, thickness to match adjacent piping insulation specified thickness.
   3. Cover: 17-ounce silicone impregnated fiberglass cloth suitable for temperatures up to 1,400 degrees Fahrenheit.
   4. Cover fasteners: Use one of the following systems:
      a. Grommets in the blanket and stainless steel wire.
      b. 1-inch wide straps with stainless steel rectangular ring buckles and Velcro on strap tail.

2.07 SHIPPING

A. As specified in Section 01600 - Product Requirements.

PART 3 EXECUTION

3.01 DELIVERY, STORAGE, AND HANDLING

A. As specified in Section 01600 - Product Requirements.

B. Store insulation materials and accessories under cover and protected from moisture.

C. Handle and store insulation for use on stainless steel in accordance with ASTM C929.

3.02 PREPARATION

A. Pressure test piping and complete application of coating system before applying insulation.

B. When piping is to be heat traced, install and functionally test heat tracing before installation of insulation.

C. Before beginning installation of piping insulation, verify that the Engineer has accepted piping tests, pipe coating applications, and heat tracing tests.

3.03 INSULATION SCHEDULE

Table 2. Insulation Schedule

Service Designation(1)	**Location(2)**	**Insulation Type(3)**	**Jacket Type(3)**	**Service Temp. °F(4)**	**Vapor Barrier**
Hot Water Supply and Return	Interior or Exterior	2 or 3	2 or 3	100-200	Required
Aeration Air (AA)(6)	Interior	2	1	Note 4	Required
Engine Jacket Water	Interior	2 or 3	2 or 3	Above 200	Required
Engine Exhaust	Interior	4	3	Note 5	None
Heat Traced Pipes(7)	Exterior	1 or 2	2	N/A	Install on Type 2 insulation

Notes:

1. Refer to Piping Schedule in Section 15052 - Common Work Results for General Piping for service designations.
2. Insulation jackets are not required for interior installations that are concealed. See definitions for description of concealed locations.
3. Contractor may select from options listed.
4. Unless noted otherwise, use service temperature range provided in this table to establish insulation thickness as required by TABLE 1. Required Insulation Thicknesses.
5. Service temperature based on engine rating. Use Type I calcium silicate for exhaust temperatures up to 1,000 degrees Fahrenheit; use Type II calcium silicate for exhaust temperatures above 1,000 degrees Fahrenheit.
6. Install insulation on all aeration air piping located from the discharge of blowers to 10 feet above the slab. Insulation is not required for aeration air piping that is installed higher than 10 feet above the slab.
7. Insulate all piping systems that are specified to be heat traced.

3.04 INSTALLATION

A. Install insulation and jacket materials in accordance with manufacturer's written instructions.

B. Apply insulation in smooth, clean manner with tight and finished smooth joints. Fit insulation tightly against surfaces. Insulate each continuous run of pipe with full-length sections of insulation with a single piece cut to length to complete the run of pipe. Do not use cut pieces or scraps to complete the installation.

C. Butt longitudinal and circumferential insulation joints firmly together.

D. Maintain the integrity of vapor barrier jacketing. Do not use staples to hold vapor barrier overlaps in place.

E. Apply sealant or cement when previous applications of adhesives and cement have thoroughly dried.

F. Apply insulation to permit expansion or contraction of pipelines without damage to insulation or jacketing.

G. Fittings:
    1. Insulate fittings by covering with mitered sections of insulation or utilize factory-made prefabricated fitting shapes.
    2. Terminate preformed pipe jackets or covering at sufficient distance from flanges to permit removal of bolts.
    3. Overlap flange and flanged fitting insulation on adjacent pipe covering by at least 2 inches.

H. Valves:
    1. Insulate valves 3 inches in nominal size and larger with removable insulating blankets.
    2. Size blanket to extend up to packing gland only so that replacement of packing does not require removal of insulating blanket.

I. Provide continuous insulation through and over pipe supports and provide protection saddles at supports.

J. Extend insulation against insulation end protection shields or covers so that insulation voids do not exist and provide watertight end seals and covers where insulation terminates.

K. Insulate pipeline strainers to permit removal of strainer basket without disturbing insulation on strainer body.

L. Provide continuous pipe insulation and covering through sleeves or openings in walls and floors. When buried pipe enters a building through a below grade wall or slab penetration, begin insulation system on interior side of penetration.

M. Apply pre-molded pipe insulation with extended legs when used on pipe traced with either tubing or electric cable type.

N. Thermally isolate all insulation closure locations (end caps, transitions, etc.) Type 1 or 2 jacket installation on piping with potential reach temperatures greater than 150 degrees Fahrenheit.

O. Apply piping identification on jackets as specified in Section 15076 - Pipe Identification.

END OF SECTION

SECTION 15110

COMMON WORK RESULTS FOR VALVES

PART 1 GENERAL

1.01 SUMMARY

A. Section includes: Basic requirements for valves.

1.02 REFERENCES

A. American Water Works Association (AWWA):
   1. C111/A21.11 - Standard for Rubber-Gasket Joints for Ductile-Iron Pressure Pipe Fittings.

B. ASTM International (ASTM):
   1. A126 - Standard Specification for Gray Iron Casting for Valves, Flanges, and Pipe Fittings.
   2. A167 - Standard Specification for Stainless and Heat-Resisting Chromium-Nickel Steel Plate, Sheet, and Strip.
   3. A536 - Standard Specification for Ductile Iron Castings.

C. NSF International (NSF):
   1. 61 - Drinking Water System Components - Health Effects.

D. Society for Protective Coatings (SSPC):
   1. SP 7 - Brush-Off Blast Cleaning.
   2. SP 10 - Near-White Blast Cleaning.

1.03 DESIGN REQUIREMENTS

A. Pressure rating:
   1. Suitable for service under minimum working pressures of 150 pounds per square inch gauge.
   2. When a piping system is specified in the Piping Schedule to be tested at a pressure greater than 150 pounds per square inch gauge, provide valves for that piping system with design working pressure which is sufficient to withstand the test pressure.

B. Valve to piping connections: Per PCU USSM.

1.04 SUBMITTALS

A. Submit as specified in Section 01330 - Submittal Procedures.

B. Product data:
   1. Submit the following information for each valve:
      a. Valve type, size, pressure rating, Cv factor.
      b. Coatings.

c. Power valve actuators:
    1) Information on valve actuator including size, manufacturer, model number, limit switches, mounting; and motor enclosure, seating and unseating torque coefficient, dynamic torque, and bearing friction for calculation of maximum operating torque.
    2) Complete wiring diagrams and control system schematics.
d. Manual valve actuators:
    1) Information on valve actuator including size, manufacturer, model number.
e. Certified drawings with description of component parts, dimensions, weights, and materials of construction.
f. Certifications of reference standard compliance:
    1) Submit certification that the valves and coatings are suitable in potable water applications in accordance with NSF 61.
g. Clearly mark submittal information to show specific items, materials, and accessories or options being furnished.
h. Factory test data.

C. Provide vendor operation and maintenance manual as specified in Section 01782 - Operation and Maintenance Data.
    1. Furnish bound sets of installation, operation, and maintenance instructions for each type of manual valve 4 inch in nominal size and larger, and all non-manual valves. Include information on valve operators.

D. Provide Manufacturer's Certificate of Source Testing as specified in Section 01756 - Commissioning.

E. Provide Manufacturer's Certificate of Installation and Functionality Compliance as specified in Section 01756 - Commissioning.

1.05 QUALITY ASSURANCE

A. Manufacturer qualifications:
    1. Valves manufactured by manufacturers whose valves have had successful operational experience in comparable service.

1.06 DELIVERY STORAGE AND HANDLING

A. Protect valves and protective coatings from damage during handling and installation; repair coating where damaged.

PART 2 PRODUCTS

2.01 MATERIALS

A. Stainless steel: In accordance with ASTM A167, Type 316, or Type 304, UNS Alloy S31600 or S30400.

B. Valve and operator bolts and nuts:
    1. Fabricated of stainless steel for the following installation conditions:
        a. Submerged in sewage or water.
        b. In an enclosed space above sewage or water.

        - c. In structures containing sewage or water, below top of walls.
        - d. At openings in concrete or metal decks.
    - 2. Where dissimilar metals are being bolted, use stainless steel bolts with isolation bushings and washers.
    - 3. Underground bolts: Low-alloy steel in accordance with AWWA C111/A21.11.

- C. Bronze and brass alloys: Use bronze and brass alloys with not more than 6 percent zinc and not more than 2 percent aluminum in the manufacture of valve parts; UNS Alloy C83600 or C92200 unless specified otherwise.

- D. Valve bodies: Cast iron in accordance with ASTM A126, Class 30 minimum or ductile iron in accordance with ASTM A536, Grade 65-45-12 minimum unless specified otherwise.

2.02 INTERIOR PROTECTIVE LINING

- A. When specified in the particular valve specification, provide valves with type of protective lining specified in the particular valve Specification.

- B. Apply protective lining to interior, non-working surfaces, except stainless steel surfaces.

- C. Lining types:
    - 1. Fusion bonded epoxy:
        - a. Manufacturers: One of the following or equal:
            - 1) 3-M Company, ScotchKote 134; certified to NSF 61 for drinking water use.
        - b. Clean surfaces in accordance with SSPC SP 7 or SP 10, as recommended by epoxy manufacturer.
        - c. Apply in accordance with manufacturer's published instructions.
        - d. Lining thickness: 0.010 to 0.012 inches except that:
            - 1) Lining thickness in grooves for gaskets: 0.005 inches.
            - 2) Do not coat seat grooves in valves with bonded seat.
        - e. Quality control:
            - 1) Lining thickness: Measured with a non-destructive magnetic type thickness gauge.
            - 2) Verify lining integrity with a wet sponge-testing unit operating at approximately 60 volts, or as recommended by the lining manufacturer.
            - 3) Consider tests successful when lining thickness meets specified requirements and when no pinholes are found.
            - 4) Correct defective lining disclosed by unsuccessful tests, and repeat test.
            - 5) Repair pinholes with liquid epoxy recommended by manufacturer of the epoxy used for lining.
    - 2. High solids epoxy:
        - a. Product equivalent to high solids epoxy specified in Section 09960 - High-Performance Coatings.
            - 1) Certified in accordance with NSF 61 for drinking water use.

        2) Interior: Coat valve interior with manufacturer's equivalent high-performance high solids epoxy coating system with a certifiable performance history for the service conditions and as approved by the Engineer. Manufacturer shall provide for approval, coating information sufficient to allow Engineer to assess equivalence to the specified high solids epoxy coating specified in Section 09960 - High-Performance Coatings.
    b. Clean surfaces to meet SP-7 or SP-10, or as recommended by coating manufacturer.
    c. Quality control: After coating is cured, check coated surface for porosity with a holiday detector set at 1,800 volts, or as recommended by coating manufacturer.
        1) Repair holidays and other irregularities and retest coating.
        2) Repeat procedure until holidays and other irregularities are corrected.

2.03 UNDERGROUND VALVES

A. Provide underground valves with flanged, mechanical, or other type of joint required for the type of pipe to which the valve is to be connected.

B. Coating and wrapping:
    1. After installation, encase valves in 2 layers of polyethylene wrap as specified for ductile iron piping in Section 15211 - Ductile Iron Pipe: AWWA C151 as indicated on the Drawings.
        a. Ascertain that polyethylene wrapping does not affect operation of valve.

2.04 FIELD APPLIED COATING OF VALVE EXTERIOR

A. Match color and be compatible with manufacturer’s coating system and as specified in Section 09960 - High-Performance Coatings.
    1. When shop applied finish coating matches field applied coating on adjacent piping, touch up shop coating in damaged areas in accordance with instructions recommended by the paint manufacturer.
    2. When shop applied coating does not match field coating on adjacent piping, or when damage has occurred to the shop applied coating that requires more than touchup, blast clean valve surfaces or utilize other surface preparation recommended by the manufacturer of the coating material and apply the coating system used for coating adjacent piping.

2.05 VALVE BOXES

A. Per PCU USSM.

2.06 VALVE OPERATORS

A. Valve operator "Open" direction: Open counterclockwise.

B. Provide valves located below operating level or deck with extensions for key operation or floor stands and handwheels.

C. Provide manually operated valves located not more than 6 feet above the operating level with tee handles, wrenches, or handwheels. Rotate the valves to the operator chest height.
   1. Make the valve operator more conveniently accessible by rolling valves, located more than 5 feet but less than 6 feet above the operating level, toward the operating side.
   2. Secure tee handles and wrenches to the valve head or stem, except where a handle or wrench so secured constitutes a hazard to personnel; in which case, stow handle or wrench immediately adjacent to the valve on or in a suitable hanger, bracket, or receptacle.

D. Fit valves located more than 6 feet above operating level with chain operated handles or valve wheels.
   1. Chains: Sufficient length to reach approximately 4 feet above the operating level.
   2. Where chains constitute a nuisance or hazard to operating personnel, provide holdbacks or other means for keeping the chains out of the way.

E. Provide an operator shaft extension from valve or valve operator to finished grade or deck level when buried valves, and other valves located below the operating deck or level, are specified or indicated on the Drawings to be key operated; provide 2 inch square AWWA operating nut, and box and cover as specified, or a cover where a box is not required.

PART 3 EXECUTION

3.01 EXAMINATION

A. Preparation prior to installation:
   1. Install valves after the required submittal on installation has been accepted.
   2. Determine after flanged valves and flanged check valves are selected, the face-to-face dimensions of flanged valves and flanged check valves.

B. Fabricate piping to lengths taking into account the dimensions of flanged valves and flanged check valves.

3.02 INSTALLATION

A. Provide incidental work and materials necessary for installation of valves including flange gaskets, flange bolts and nuts, valve boxes and covers, concrete bases, blocking, and protective coating.

B. Where needed, furnish and install additional valves for proper operation and maintenance of equipment and plant facilities under the following circumstances:
   1. Where such additional valves are required for operation and maintenance of the particular equipment furnished by Contractor.
   2. Where such additional valves are required as a result of a substitution or change initiated by Contractor.

C. Install valves with their stems in vertical position above the pipe, except as follows:
   1. Butterfly valves, gate valves aboveground, globe valves, ball valves, and angle valves may be installed with their stems in the horizontal position.

    2. Install buried plug valves with geared operators with their stems in a horizontal position.

D. Install valves so that handles clear obstructions when the valves are operated from fully open to fully closed.

E. Place top of valve boxes flush with finished grade or as otherwise indicated on the Drawings.

F. Valves with threaded connections:
    1. Install valves by applying wrench on end of valve nearest the joint to prevent distortion of the valve body.
    2. Apply pipe joint compound or Teflon tape on external (male) threads to prevent forcing compound into valve seat area.

G. Valves with flanged connections:
    1. Align flanges and gasket carefully before tightening flange bolts.
    2. When flanges are aligned, install bolts and hand tighten.
    3. Tighten nuts opposite each other with equal tension before moving to next pair of nuts.

H. Valves with soldered connections:
    1. Do not overheat connection to prevent damage to resilient seats and metal seat rings.
    2. Position valves in fully open position before starting soldering procedure.
    3. Apply heat to piping rather than to valve body.

3.03 COMMISSIONING

A. As specified in Section 01756 - Commissioning and this Section.

B. Manufacturer services from each manufacturer for all valves supplied:
    1. Provide Manufacturer’s Certificate of Source Testing.
    2. Provide Manufacturer’s Certificate of Installation and Functionality Compliance.

C. As specified elsewhere for specific valve types, sizes or actuators.
    1. Source testing.
    2. Manufacturers on site services for Owner Training, Installation Testing, Functional Testing, and during the Process Operational Period.

END OF SECTION

SECTION 15111

BALL VALVES

PART 1 GENERAL

1.01 SUMMARY

A. Section includes: Ball valves.

B. As specified in Section 15110 - Common Work Results for Valves.

1.02 REFERENCES

A. American Society of Mechanical Engineers (ASME):
  1. B16.1 - Gray Iron Pipe Flanges and Flanged Fittings: Classes 25, 125, and 250.
  2. B16.5 - Pipe Flanges and Flanged Fittings: NPS 1/2 through 24.

B. American Water Works Association (AWWA):
  1. C507 - Standard for Ball Valves 6 Inch Through 48 Inch.

C. ASTM International (ASTM):
  1. A48 - Standard Specification for Gray Iron Castings.
  2. A216 - Standard Specification for Steel Castings, Carbon, Suitable for Fusion Welding, for High-Temperature Service.
  3. A351 - Standard Specification for Castings, Austenitic, for Pressure-Containing Parts.

1.03 SYSTEM DESCRIPTION

A. General: Unless otherwise indicated on the Drawings use:
  1. Metal body ball valves on metallic pipelines.
  2. Plastic body ball valves on plastic pipelines.

B. Do not use metal body ball valves in sodium hypochlorite or sodium bisulfite systems.

1.04 SUBMITTALS

A. Submit as specified in Section 01330 - Submittal Procedures.

B. Product data: As specified in Section 15110 - Common Work Results for Valves:
  1. Metal body ball valves: 6 inches and larger only: Submit affidavit of compliance in accordance with AWWA C507.
  2. Operation and maintenance manual.

C. Commissioning submittals:
  1. Provide Manufacturer’s Certificate of Installation and Functionality Compliance as specified in Section 01756 - Commissioning.

1.05 WARRANTY

A. Provide warranty as specified in Section 01783 - Operation and Maintenance Data.

PART 2 PRODUCTS

2.01 PLASTIC BODY BALL VALVES

A. Manufacturers: One of the following or equal:
   1. Asahi America.
   2. Chemtrol Division, NIBCO, Inc.
   3. Plast-O-Matic Valves, Inc.
   4. Georg Fisher Piping Systems.

B. General:
   1. Type: Non-lubricated and capable of sealing in either flow direction.
   2. End connections: True union; solvent or heat welded to piping.
   3. Operator handle: Lever.

C. Materials:
   1. Body: Polyvinyl chloride (PVC).
   2. Ball: Polyvinyl chloride (PVC).
   3. Seats: PTFE (Teflon).
   4. O-rings: FKM (Viton).

2.02 REGULAR PORT THREADED STAINLESS STEEL BALL VALVES 2 INCHES AND SMALLER

A. Manufacturers: One of the following or equal:
   1. McCanna Figure M402.
   2. Worcester Series 48.
   3. Stockham Figure SD 2120-SSMO-R-T.
   4. Apollo 76-100 Series.

B. General.
   1. Rated at a minimum pressure of 1,500 psi WOG at a temperature of 100 degrees Fahrenheit.
   2. Lever actuators, plastic coated.
   3. Threaded Ends (ASME B1.20.1).
   4. Non-blowout stems.

C. Material:
   1. Body, Ball and Stem: 316 stainless steel, ASTM A276 or A351.
   2. Seats and Seals: Reinforced Teflon.

PART 3 EXECUTION

3.01 INSTALLATION

A. General: Install each type of valve in accordance with manufacturers' printed instructions.

B. Special techniques:
   1. PVC ball valves for hypochlorite service:
      a. Provide valve with factory drilled 0.125-inch hole, deburred in the upstream side of the ball.
      b. Provide an engraved plastic tag permanently attached to the valve stem stating "One side of ball drilled for hypochlorite service."

3.02 FIELD APPLIED COATING OF VALVE EXTERIOR

A. Match color and be compatible with manufacturer’s coating system and as specified in Section 09960 - High-Performance Coatings.
   1. When shop applied finish coating matches field applied coating on adjacent piping, touch up shop coating in damaged areas in accordance with instructions recommended by the paint manufacturer.
   2. When shop applied coating does not match field coating on adjacent piping, or when damage has occurred to the shop applied coating that requires more than touchup, blast clean valve surfaces or utilize other surface preparation recommended by the manufacturer of the coating material and apply the coating system used for coating adjacent piping.

3.03 COMMISSIONING

A. As specified in Section 01756 - Commissioning and this Section.

B. Manufacturer services:
   1. Provide certificates:
      a. Manufacturer's Certificate of Installation and Functionality Compliance.

C. Functional testing:
   1. Valves:
      a. Test witnessing: Witnessed.
      b. Conduct pressure and leak test, as specified in Section 15110 - Common Work Results for Valves.

END OF SECTION

SECTION 15114

CHECK VALVES

PART 1 GENERAL

1.01 SUMMARY

A. Section includes: Check valves.

B. As specified in Section 15110 - Common Work Results for Valves.

1.02 REFERENCES

A. American Society of Mechanical Engineers (ASME):
  1. B16.1 - Gray Iron Pipe Flanges and Flanged Fittings: Classes 25, 125, and 250.
  2. B16.5 - Pipe Flanges and Flanged Fittings: NPS 1/2 through NPS 24 Inch Standard.

B. American Water Works Association (AWWA):
  1. C508 - Standard for Swing-Check Valves for Waterworks Service 2 Inch through 24 Inch (50-mm through 600-mm) NPS.

C. ASTM International (ASTM):
  1. A126 - Standard Specification for Gray Iron Castings for Valves, Flanges, and Pipe Fittings.
  2. A313 - Standard Specification for Stainless Steel Spring Wire.
  3. A536 - Standard Specification for Ductile Iron Castings.
  4. B582 - Standard Specification for Nickel-Chromium-Iron-Molybdenum-Copper Alloy Plate, Sheet, and Strip.
  5. B584 - Standard Specification for Copper Alloy Sand Castings for General Applications.

1.03 SYSTEM DESCRIPTION

A. Design requirements:
  1. Check valves: When not otherwise specified as indicated on the Drawings, provide check valves suitable for service as follows:
    a. In either horizontal or vertical position.
    b. Suitable for service working pressures up to 150 pounds per square inch gauge.

1.04 SUBMITTALS

A. Submit as specified in Section 01330 - Submittal Procedures.

B. Product data: As specified in Section 15110 - Common Work Results for Valves.

C. Commissioning submittals:
   1. Provide Manufacturer's Certificate of Installation and Functionality Compliance as specified in Section 01756 - Commissioning.

1.05 WARRANTY

A. Provide warranty as specified in Section 01783 - Warranties and Bonds.

PART 2 PRODUCTS

2.01 CENTER GUIDE (SILENT) CHECK VALVES

A. Manufacturers: One of the following or equal:
   1. APCO, Model Number 600.
   2. Crispin, Series GC.

B. Valve design:
   1. Center-guided, spring-loaded plug.
   2. Replaceable seat and plug.
   3. Shaft guide bushing.
   4. Non-slam, silent shutoff.
   5. Flanged body.

C. Materials:
   1. Body: Cast iron, ASTM A126 Grade B, or Type 316 stainless steel, ASTM A313.
   2. Plug and seat: Bronze, ASTM B584 C83600.
   3. Spring: Stainless steel, ASTM A313 Type 316.
   4. Shaft and bushing: Bronze, ASTM B584 C83600.

D. Seat:
   1. Buna-N or EPDM.

2.02 PLASTIC BALL CHECK VALVES

A. Manufacturers: One of the following or equal:
   1. Chemtrol Division of Nibco.
   2. Georg Fischer Piping Systems.
   3. Plast-O-Matic Valves, Inc.

B. Valves: Ball type:
   1. Material: Polyvinyl chloride.
   2. End connection: Double-or single-union-type.
   3. Seals: Viton.

C. Valve body material:
   1. Polyvinyl chloride (PVC), chlorinated polyvinyl chloride (CPVC), Polypropylene (PP) or polyvinylidene fluoride (PVDF), as best suited for each individual service condition.

D. Union connections material:
   1. NPT or socket ends conforming to ASME B16.5 pipe flanges and flange fittings, Class 150.

E. Seats and seals material:
   1. EPDM, Buna-N, or Viton.

F. Maximum inlet pressure rating:
   1. PVC, CPVC, or PVDF: 150 pound per square inch at 77 degrees Fahrenheit.
   2. PP: 100 pounds per square inch at 77 degrees Fahrenheit.

2.03 DUCKBILL CHECK VALVES

A. Manufacturers: One of the following or equal:
   1. Tide Flex, Series TF-2.
   2. J&S Valve Hedflex.
   3. Proco Products, Inc. 700 Series.

B. Design:
   1. Maximum downstream head: 30 feet.
   2. With internal pressure 1 to 2 inches w.c. above backpressure, bill of valve opens, allowing flow.
   3. With backpressure 1 to 2 inches w.c. above internal pressure, bill of valve closes, preventing backflow.

C. End connection:
   1. Flanged.

D. Materials of construction:
   1. Single piece elastomer construction with internal polyester fabric reinforcing all vulcanized into a composite material.
      a. Internal reinforcing sufficient to maintain structural integrity under the specified operating conditions.
      b. Exterior applications require coating for UV protection and to resist pest gnawing.
   2. Elastomeric material: Nitrile rubber.

PART 3 EXECUTION

3.01 INSTALLATION

A. Valves:
   1. Install with proper orientation of flow direction arrow on valve body.
   2. When installed in horizontal pipelines, mount with shaft on vertical locations.
   3. When mounted in a vertical pipeline, directly downstream of an elbow, mount with the shaft perpendicular to the outermost portion of the elbow.
   4. Mount on downstream side of discharge silencer when used on positive displacement and centrifugal blowers.

3.02 FIELD APPLIED COATING OF VALVE EXTERIOR

A. Match color and be compatible with manufacturer’s coating system and as specified in Section 09960 - High-Performance Coatings.
   1. When shop applied finish coating matches field applied coating on adjacent piping, touch up shop coating in damaged areas in accordance with instructions recommended by the paint manufacturer.
   2. When shop applied coating does not match field coating on adjacent piping, or when damage has occurred to the shop applied coating that requires more than touchup, blast clean valve surfaces or utilize other surface preparation recommended by the manufacturer of the coating material and apply the coating system used for coating adjacent piping.

3.03 COMMISSIONING

A. As specified in Section 01756 - Commissioning and this Section.

B. Manufacturer services:
   1. Provide certificates:
      a. Manufacturer's Certificate of Installation and Functionality Compliance.

C. Functional testing:
   1. Valves:
      a. Test witnessing: Witnessed.
      b. Conduct pressure and leak test, as specified in Section 15110 - Common Work Results for Valves.

END OF SECTION

SECTION 15115

GATE, GLOBE, AND ANGLE VALVES

PART 1 GENERAL

1.01 SUMMARY

A. Section includes: Gate, globe, angle, plug disc and plain hose valves, and yard hydrants.

B. As specified in Section 15110 - Common Work Results for Valves.

1.02 REFERENCES

A. American Water Works Association (AWWA):
   1. C515 - Standard for Reduced-Wall, Resilient-Seated Gate Valves for Water Supply Services.
   2. C 550 - Protective Interior Coatings for Valves and Hydrants.

B. ASTM International (ASTM):
   1. B98 - Standard Specification for Copper-Silicon Alloy Rod, Bar, and Shapes.

1.03 SUBMITTALS

A. Submit as specified in Section 01330 - Submittal Procedures.

B. Product data: As specified in Section 15110 - Common Work Results for Valves.

C. Commissioning submittals: For valves larger than 16-inch:
   1. Provide Manufacturer's Certificate of Installation and Functionality Compliance as specified in Section 01756 - Commissioning.

1.04 WARRANTY

A. Provide warranty as specified in Section 01783 - Warranties and Bonds.

B. Interior epoxy coatings: Affidavit of compliance attesting that epoxy coatings applied to interior surfaces of valves comply in accordance with all provisions of AWWA C550.

PART 2 PRODUCTS

2.01 FIELD APPLIED COATING OF VALVE EXTERIOR

A. Match color and be compatible with manufacturer's coating system and as specified in Section 09960 - High-Performance Coatings.
   1. When shop applied finish coating matches field applied coating on adjacent piping, touch up shop coating in damaged areas in accordance with instructions recommended by the paint manufacturer.

2. When shop applied coating does not match field coating on adjacent piping, or when damage has occurred to the shop applied coating that requires more than touchup, blast clean valve surfaces or utilize other surface preparation recommended by the manufacturer of the coating material and apply the coating system used for coating adjacent piping.

2.02 GATE VALVES

A. Gate valves aboveground:
   1. Valves less than 3 inches in size for clean water and air service:
      a. Manufacturers: Per PCU USSM. Design: Per PCU USSM.
   2. Valves 3 inches in size and larger:
      a. Manufacturers: Per PCU USSM.
      b. Design: Per PCU USSM.

B. Gate valves underground:
   1. Manufacturers: Per PCU USSM.
   2. Design:
      a. Size, material, configuration: Indicated on the Drawings.
      b. Resilient wedge type in accordance with AWWA C515.
      c. Stem:
         1) Iron body, resilient seat, non-rising stem, double O-ring stem seal.
         2) Rising stem configuration with handwheel diameter sized to allow opening of valve with no more than a 40-pound pull.
      d. Ductile or cast-iron wedge encapsulated in nitrile rubber and capable of sealing in either flow direction.
      e. Bronze stem with double or triple O-ring or braided packing stem seals.
      f. Coat interior and exterior surfaces of valve body and bonnet with fusion-bonded epoxy in accordance with AWWA C550.
      g. Valve operator: Provide standard AWWA 2-inch operating nut, matching valve key, and valve box for operating stem.

2.03 HOSE VALVES AND YARD HYDRANTS

A. Hose valves:
   1. Manufacturers:
      a. Globe threaded valve: One of the following or equal:
         1) Crane, No. 7TF.
         2) Stockham, Figure No. B22T.
      b. Angle threaded valve: One of the following or equal:
         1) Crane, No. 17TF.
         2) Stockham, Figure No. B222T.
   2. Design:
      a. Size and configuration: Indicated on the Drawings.
      b. Valve: Globe or angle valve with threaded ends.
      c. Disc: Renewable, made of Teflon or Buna-N.
      d. Threaded ends rated for a pressure of 200 pounds per square inch.

B. Fire hydrant: Per PCU USSM.

PART 3 EXECUTION

3.01 INSTALLATION

A. Per PCU USSM.

3.02 COMMISSIONING

A. As specified in Section 01756 - Commissioning and this Section.

B. Manufacturer services: For valves larger than 16-inch.
  1. Provide certificates:
    a. Manufacturer’s Certificate of Installation and Functionality Compliance.

C. Functional testing:
  1. Valves:
    a. Test witnessing: Witnessed.
    b. Conduct pressure and leak test as specified in Section 15110 - Common Work Results for Valves.

END OF SECTION

SECTION 15117

SPECIALTY VALVES

PART 1 GENERAL

1.01 SUMMARY

A. Section includes: Specialty valves.

B. As specified in Section 15110 - Common Work Results for Valves.

1.02 REFERENCES

A. American Society of Mechanical Engineers (ASME):
   1. B16.42 - Ductile Iron Pipe Flanges and Flanged Fittings: Classes 150 and 300.

B. American Water Works Association (AWWA):
   1. C511 - Standard for Reduced Pressure-Principle Backflow-Prevention Assembly.
   2. C800 - Underground Service Line Valves & Fittings (Also Included: Collected Standards for Service Line Materials).

C. ASTM International (ASTM):
   1. A48 - Standard Specification for Gray Iron Castings.
   2. A126 - Standard Specification for Gray Iron Casting for Valves, Flanges, and Pipe Fittings.
   3. A276 - Standard Specification for Stainless Steel Bars and Shapes.
   4. A536 - Standard Specification for Ductile Iron Castings.
   5. B584 - Standard Specification for Copper Alloy Sand Castings for General Application.

D. National Electrical Manufacturers Association (NEMA):
   1. 250 - Enclosures for Electrical Equipment (1000 V Maximum).

1.03 DEFINITIONS

A. NEMA Type 4 enclosure in accordance with NEMA 250.

1.04 SUBMITTALS

A. Submit as specified in Section 01330 - Submittal Procedures.

B. Product data: As specified in Section 15110 - Common Work Results for Valves.

C. Commissioning submittals:
   1. Backflow preventer certification.
   2. Provide Manufacturer's Certificate of Installation and Functionality Compliance as specified in Section 01756 - Commissioning.

1.05 WARRANTY

A. Provide warranty as specified in Section 01783 - Warranties and Bonds.

PART 2 PRODUCTS

2.01 BACKFLOW PREVENTERS

A. Per PCU USSM.

2.02 SOLENOID VALVES

A. 2-way solenoid valves:
  1. Manufacturers: One of the following or equal:
    a. Automatic Switch Company, Series 8210.
    b. Skinner Electric Valve Division, Series C.

B. Design:
  1. Valves: Suitable for service under the following conditions:
    a. Fluid: Potable Water.
    b. Temperature of fluid: 105 degrees Fahrenheit (max).
    c. Piping test pressure: 85 pounds per square inch gauge.
  2. Unless otherwise indicated on the Drawings, provide valves that:
    a. Minimum NEMA Type 4 enclosure.
    b. 120 VAC operation.
    c. Suitable for use as indicated on the Drawings.
    d. Minimum Class F coil insulation.
  3. 2-way valves: Furnish with openings of size equal to or larger than the nominal size designation of the valve.
  4. Furnish with manual/bypass operators.

C. Materials:
  1. Body: Brass or bronze.
  2. Seats: Resilient material.

2.03 CORPORATION STOPS

A. Per PCU USSM.

2.04 CURB STOPS

A. Per PCU USSM.

2.05 COCKS

A. Gauge cock:
  1. Manufacturers: One of the following or equal:
    a. Lunkenheimer Company, Figure 1178 or Figure 1180.

PART 3 EXECUTION

3.01 INSTALLATION

A. Install as specified in Section 15110 - Common Work Results for Valves in accordance with manufacturer's published instructions.

B. Per PCU USSM.

3.02 COMMISSIONING

A. As specified in Section 01756 - Commissioning and this Section.

B. Manufacturer services:
   1. Provide certificates:
      a. Manufacturer’s Certificate of Installation and Functionality Compliance.

C. Functional testing:
   1. Conduct pressure and leak test as specified in Section 15110 - Common Work Results for Valves.
   2. Conduct pressure and leak test as specified in Section 15110 - Common Work Results for Valves.
   3. Backflow preventer:
      a. Test witnessing: Witnessed.
      b. Conduct pressure and leak test as specified in Section 15110 - Common Work Results for Valves.
      c. Backflow preventer certification.

END OF SECTION

THIS PAGE INTENTIONALLY LEFT BLANK

SECTION 15118

PRESSURE RELIEF AND PRESSURE SUSTAINING VALVES

PART 1 GENERAL

1.01 SUMMARY

A. Section includes: Pressure reducing and pressure relief valves for water, and chemical service.

B. As specified in Section 15110 - Common Work Results for Valves.

1.02 REFERENCES

A. American Society of Mechanical Engineers (ASME):
   1. B16.42 - Ductile Iron Pipe Flanges and Flanged Fittings: Classes 150 and 300.

B. ASTM International (ASTM):
   1. A48 - Standard Specification for Gray Iron Castings.
   2. A536 - Standard Specification for Ductile Iron Castings.

C. Underwriters Laboratories, Inc. (UL).

D. American Water Works Association (AWWA):
   1. C503 - Wet-Barrel Fire Hydrants.

1.03 SUBMITTALS

A. Submit as specified in Section 01330 - Submittal Procedures.

B. Product data: As specified in Section 15110 - Common Work Results for Valves.

C. Commissioning submittals:
   1. Provide Manufacturer’s Certificate of Installation and Functionality Compliance as specified in Section 01756 - Commissioning.

1.04 WARRANTY

A. Provide warranty as specified in Section 01783 - Warranties and Bonds.

PART 2 PRODUCTS

2.01 WATER PRESSURE RELIEF VALVES

A. Water pressure relief valves:
   1. Manufacturers: per PCU USSM.

2. Design:
    - a. Pilot controlled, hydraulically operated, diaphragm actuated, globe patterned valve with check feature.
    - b. Rated for 300 pounds per square inch gauge.
    - c. Pilot line: Equipped with a strainer.
    - d. End connections:
        - 1) 2 1/2 inch and smaller: Screwed.
        - 2) 3 inch and larger: 150 pound rated flanges in accordance with ASME B16.42.
    - e. Maintain a maximum upstream pressure by opening to relieve high pressure.
        - 1) Pilot control system shall opeate such that as excess line pressure is dissipated the valve slowly closes.
        - 2) Piot control shall be adjustable over a range of 20 to 200 pounds per square inch.
        - 3) Provide strainer, three isolation vales and opening speed control in the pilot control piping and tubing.
3. Materials:
    - a. Body and cover: Cast iron ASTM A48 or Ductile Iron ASTM A536.
    - b. Valve trim: 316 Stainless Steel.
    - c. Pilot control: Series 316 stainless steel.
    - d. Pilot Tubing: 316 Stainless Steel
    - e. Diaphragm: Nylon reinforced Buna N.

2.02 PRESSURE RELIEF VALVES FOR CHEMICAL SERVICE

A. Manufacturers: One of the following or equal:
- 1. Plast-O-Matic, Series RVT, RVDT or TRVDT.
- 2. Asahi/America.
- 3. Georg Fischer Piping Systems.

B. Materials:
- 1. Valve body: CPVC or PVC.
- 2. U-cup seals:
    - a. Polymer service: Viton.
    - b. Hypochlorite service: Viton.
    - c. Caustic service: EPDM.
    - d. Sodium Bisulfite: EPDM.
- 3. Adjusting bolt, locknut, control spring, and fasteners: stainless steel.

C. Design:
- 1. Pressure rating: Not less than 150 pounds per square inch.
- 2. In-line or angle pattern design, size as indicated on the Drawings.
- 3. End connections:
    - a. 1 inch and smaller: Threaded.
    - b. Larger than 1 inch: Flanged.
- 4. Relief set point:
    - a. Externally adjustable without removing valve from piping system.
    - b. Set valve to open at 10 pounds per square inch more than pump discharge pressure at operating point, or as indicated on the Drawings.

2.03 PRESSURE SUSTAINING VALVES

A. Manufacturers: Per PCU USSM.

B. Operation:
   1. Flow direction: 1 way.
   2. Sustain pressure control: Maintain backpressure on upstream side of valve when called to open to allow flow to recirculated in to the GSR (Process 40).
      a. Maximum upstream pressure: 90-pounds per square inch.
      b. Minimum downstream pressure: Atmosphere.
   3. Solenoid actuated valve allows opening of the pressure sustaining valve.

C. Design:
   1. Maximum pressure: 90 -pound per square inch.
      a. Valve Manufacturer to provide anti-cavitation.
   2. Maximum continuous flow: 4000 gallons per minute.
   3. Minimum flow: 2000 gallons per minute.
   4. Pattern: Globe.
   5. Control:
      a. Hydraulic pilot control with check feature, valve shall have solenoid pilot to provide remote opening of the valve
      b. Valve shall closed from a timed event, high water alarm or manual override.
   6. Pilot valve strainer and three isolation valves.
   7. Provide opening speed control.
   8. Flanged ends.

D. Materials:
   1. Valve body: Cast or ductile iron.
   2. Body trim: Stainless Steel.
   3. Stem, nut, and spring: Type 316 stainless steel.
   4. Disc guide, seat and cover bearing: Type 316 stainless steel.
   5. Pilot Valves and Tubing: 316 stainless steel.
   6. Diaphragm: Viton.

PART 3 EXECUTION

3.01 INSTALLATION

A. Install as specified in Section 15110 - Common Work Results for Valves.

3.02 FIELD APPLIED COATING OF VALVE EXTERIOR

A. Match color and be compatible with manufacturer’s coating system and as specified in Section 09960 - High-Performance Coatings:
   1. When shop applied finish coating matches field applied coating on adjacent piping, touch up shop coating in damaged areas in accordance with instructions recommended by the paint manufacturer.

2. When shop applied coating does not match field coating on adjacent piping, or when damage has occurred to the shop applied coating that requires more than touchup, blast clean valve surfaces or utilize other surface preparation recommended by the manufacturer of the coating material and apply the coating system used for coating adjacent piping.

3.03 COMMISSIONING

A. As specified in Section 01756 - Commissioning and this Section.

B. Manufacturer services:
   1. Provide certificates:
      a. Manufacturer's Certificate of Installation and Functionality Compliance.

C. Functional testing:
   1. Valves:
      a. Test witnessing: Witnessed.
      b. Conduct pressure and leak test as specified in Section 15110 - Common Work Results for Valves.

END OF SECTION

SECTION 15119

AIR AND VACUUM RELIEF VALVES

PART 1 GENERAL

1.01 SUMMARY

A. Section includes: Air release valves, air and vacuum valves, and air vents.

B. As specified in Section 15110 - Common Work Results for Valves.

1.02 REFERENCES

A. American Society of Mechanical Engineers (ASME).
  1. B16.1 - Gray Iron Pipe Flanges and Flanged Fittings: Classes 25, 125, and 250.
  2. B16.5 - Pipe Flanges and Flanged Fittings: NPS 1/2 through 24.

B. American Water Works Association (AWWA).

C. ASTM International (ASTM):
  1. A126 - Standard Specification for Gray Iron Castings for Valves, Flanges, and Pipe Fittings.
  2. A240 - Standard Specification for Chromium and Chromium-Nickel Stainless Steel Plate, Sheet, and Strip for Pressure Vessels and for General Applications.
  3. A270 - Standard Specification for Seamless and Welded Austenitic Stainless Steel Sanitary Tubing.
  4. B584 - Standard Specification for Copper Alloy Sand Castings for General Applications.

1.03 SUBMITTALS

A. Submit as specified in Section 01330 - Submittal Procedures.

B. Product data: As specified in Section 15110 - Common Work Results for Valves.

C. Commissioning submittals:
  1. Provide Manufacturer's Certificate of Installation and Functionality Compliance as specified in Section 01756 - Commissioning.

1.04 WARRANTY

A. Provide warranty as specified in Section 01783 - Warranties and Bonds.

PART 2 PRODUCTS

2.01 AIR RELEASE VALVES, WATER SERVICE

A. Manufacturers: Per PCU USSM.

B. Design: Per PCU USSM.

C. Materials: Per PCU USSM.

2.02 AIR AND VACUUM VALVES, WATER SERVICE

A. Manufacturers: Per PCU USSM.

B. Design: Per PCU USSM.

C. Materials: Per PCU USSM.

2.03 COMBINATION AIR VALVES, WATER SERVICE

A. Manufacturers: Per PCU USSM.

B. Design: Per PCU USSM.

C. Materials: Per PCU USSM.

2.04 DEGASSING VALVE FOR SODIUM HYPOCHLORITE SERVICE

A. Manufacturers: One of the following or equal:
   1. Plast-O-Matic, DGV.
   2. Primary Fluid Systems.

B. Materials:
   1. Body: PVC, CPVC, or PVDF to match piping material.
   2. Elastomers: EPDM or FKM (Viton).
   3. Rating: 100 pounds per square gauge.
   4. Connection: 1/4-inch NPT minimum.

PART 3 EXECUTION

3.01 INSTALLATION

A. Install as specified in Section 15110 - Common Work Results for Valves and manufacturer’s instructions.

B. Install air release valves and air and vacuum valves with suitable discharge lines to nearest drainage system.

3.02 FIELD APPLIED COATING OF VALVE EXTERIOR

A. Match color and be compatible with manufacturer’s coating system and as specified in Section 09960 - High-Performance Coatings.
    1. When shop applied finish coating matches field applied coating on adjacent piping, touch up shop coating in damaged areas in accordance with instructions recommended by the manufacturer.
    2. When shop applied coating does not match field coating on adjacent piping, or when damage has occurred to the shop applied coating that requires more than touchup, remove existing coating by abrasive blast cleaning and apply the coating system used for coating adjacent piping in accordance with Section 09960 - High-Performance Coatings.
        a. Submerged valves: SP-5 White Metal Blast cleaning.
        b. Other valves: SP-10 Near-white blast cleaning.

3.03 COMMISSIONING

A. As specified in Section 01756 - Commissioning and this Section.

B. Manufacturer services:
    1. Provide certificates:
        a. Manufacturer's Certificate of Installation and Functionality Compliance.

C. Functional testing:
    1. Valves:
        a. Test witnessing: Witnessed.
        b. Conduct pressure and leak test as specified in Section 15110 - Common Work Results for Valves.

END OF SECTION

THIS PAGE INTENTIONALLY LEFT BLANK

SECTION 15120

PIPING SPECIALTIES

PART 1 GENERAL

1.01 SUMMARY

A. Section includes: Piping specialties including:
   1. Flexible rubber connections.
   2. Bellows type expansion joints.
   3. Slip type expansion joints.
   4. Rubber expansion joints.
   5. Ball-type flexible joint pipe.
   6. Vibration control joints.
   7. Transition fittings.
   8. Pipe saddles.
   9. Tapping sleeves.
   10. Surge cushions.
   11. Sight glasses.
   12. Spray nozzles.
   13. Washdown monitors.

1.02 REFERENCES

A. American Society of Mechanical Engineers (ASME):
   1. B16.5 - Pipe Flanges and Flanged Fittings: NPS 1/2 through NPS 24.

B. American Water Works Association (AWWA):
   1. C110 - Standard for Ductile-Iron and Gray-Iron Fittings.
   2. C151 - Standard for Ductile-Iron Pipe, Centrifugally Cast.

C. ASTM International (ASTM):
   1. A148 - Standard Specification for Steel Castings, High-Strength, for Structural Purposes.
   2. A536 - Standard Specification for Ductile Iron Castings.

D. NSF International (NSF):
   1. 61 - Drinking Water System Components - Health Effects, Includes Errata.
   2. 372 - Drinking Water System Components - Lead Content.

1.03 SUBMITTALS

A. Submit as specified in Section 01330 - Submittal Procedures.

B. Product data:
   1. For each piping product in this Section as applicable:
      a. Design features.
      b. Load capacities.
      c. Material designations by UNS alloy number or ASTM Specification and Grade.

      d. Data needed to verify compliance with the Specifications.
      e. Catalog data.
      f. Clearly mark submittal information to show specific items, materials, and accessories or options being furnished.

C. Calculations:
   1. Provide calculations in accordance with NSF 372 for materials in contact with drinking water.

D. Manufacturer's Certificate of Installation and Functionality Compliance as specified in Section 01756 - Commissioning:
   1. Provide as specified in this Section.

1.04 WARRANTY

A. Provide warranty as specified in Section 01783 - Warranties and Bonds.

PART 2 PRODUCTS

2.01 GENERAL

A. As specified in Section 01600 - Product Requirements.

B. Materials in contact with drinking waters: In accordance with NSF 61 and NSF 372.

2.02 FLEXIBLE RUBBER CONNECTIONS

A. Manufacturers: Per PCU USSM:

B. Provide flexible rubber connections with 3/8-inch-thick neoprene rubber tube with full-faced flanged ends suitable to withstand a pressure of 150 pounds per square inch gauge.

C. Provide complete flexible rubber connections, including galvanized retaining rings and control rods.

2.03 SLIP TYPE EXPANSION JOINTS

A. PVC expansion joints:
   1. Flexible bellows type with equalizing rings.
   2. Manufacturers: One of the following or equal:
      a. Flo Control, Flo-Span.
      b. Chemtrol.
   3. Materials: PVC with EPDM O-ring.
   4. Design:
      a. 150 pound per square inch pressure rating.
      b. Double O-ring seal.
      c. Axial travel: Not less than 1.5 inches.
      d. Ends: 150-pound ASME flanges, or plain end suitable for solvent welding connections.

2.04 RUBBER EXPANSION JOINTS

A. Manufacturers: Per PCU USSM.

B. Provide rubber expansion joints complete with control units and split retaining rings.

C. Design:
  1. Material: Neoprene rubber, reinforced with embedded steel rings, and a strong synthetic fabric.
  2. Expansion rings, suitable for pressures of at least 125 pounds per square inch gauge, except as follows:
    a. Expansion joints in pump suction piping and where indicated on the Drawings suitable for minimum 90 pounds per square inch gauge pressure, and minimum 30 inches mercury vacuum.
    b. Split retaining rings, galvanized.
    c. Ends of expansion joints, 150-pound ASME flanges with drilling to match that of the piping.

2.05 TRANSITION FITTINGS

A. Manufacturers: One of the following or equal:
  1. Spears.

B. Materials:
  1. Slip socket: Schedule 80 PVC.
  2. Collar: Type 316 stainless steel.
  3. Threaded insert: Type 316 stainless steel.

2.06 PIPE SADDLES

A. Manufacturers: Per PCU USSM.

B. Materials: Per PCU USSM.

2.07 TAPPING SLEEVES

A. Manufacturers: Per PCU USSM.

2.08 MATERIALS:

A. PER PCU USSM.

2.09 SIGHT GLASSES

A. Assembly: Body casting with ASME standard adapter flanges, borosilicate Pyrex™ glass section, cleaning assembly with scalloped neoprene wipers, operating rod and handle, packing gland with packing and suitable adapter, and cock with solvent hand pump.

B. Suitable for a minimum pressure of 30 pounds per square inch gauge.

C. Manufacturers: One of the following or equal:
  1. EIMCO Process Machinery Division of Envirotech Corporation.

2. Ernst, Type K2 or K3 Cleanable Sight Glass.

2.10 SHIPPING

A. As specified in Section 01600 - Product Requirements.

PART 3 EXECUTION

3.01 GENERAL

A. As specified in Section 01600 - Product Requirements.

B. Drawings supersede conflicts with this Section.

C. Bellows type expansion joints and vibration control joints:
   1. Protect joints against damage during pressure test.

3.02 INSTALLATION

A. Expansion control joints:
   1. Install bellows type expansion control joints at piping connections to mechanical equipment to prevent damaging stresses due to normal expansion and contraction with temperature changes in piping and connected equipment.
   2. Install bellows type expansion joints so as to allow 2-1/4-inch expansion per 100 linear feet of piping.
   3. Install expansion joints adjacent to an anchor and provide 1 concentric guide on piping within 12 pipe diameters, but not more than 5 feet, from the end of the joint opposite the anchor.
      a. Locate a similar guide approximately 30 diameters but not more than 10 feet from the first.
   4. For expansion joints not installed adjacent to an anchor provide 2 concentric guides similarly located at each end of the joint.
   5. Provide control rods and additional guides where indicated on the Drawings, but at no greater intervals than recommended by the joint manufacturer in published instructions.
   6. Space intermediate supports a minimum of 10 feet, and tack weld the protective saddles to the pipe.

B. Transition couplings:
   1. Application:
      a. Use transition couplings with function and design similar to flexible couplings and flanged coupling adapters for connecting piping having different outside diameters.
   2. Install transition-coupling products specifically designed and manufactured for that application.

C. Pipe saddles:
   1. Coat threads on bolts with anti-gall coating prior to installation.

D. Tapping sleeves:
   1. Verify existing pipe material and outer diameter prior to ordering materials.
   2. Large diameter pipe:
      a. Verify the existence of lining material.
      b. Verify lining material type.
      c. Repair lining after hot tap operations are complete with similar lining or equal.
      d. Demonstrate ability to accomplish hot tap by staging a dry run simulation of the procedure prior to the initiation of the hot tap procedure.
         1) Walk through each step of the hot tap installation and show the Engineer every component needed to install the hot tap, including but not limited to, tools and materials, to ensure that all the required components are on-site and in place prior to beginning the procedure.
   3. Coat threads on bolts with anti-gall coating prior to installation.

3.03 COMMISSIONING

A. As specified in Section 01756 - Commissioning and this Section.

B. Manufacturer services:
   1. Required only for:
      a. Transition couplings.
      b. Tapping sleeves for large diameter pipe.
   2. Provide Manufacturer’s Certificate of Installation and Functionality Compliance.

C. Field testing:
   1. As specified in Section 15052 - Common Work Results for General Piping.
   2. Protect bellows type expansion joints and vibration control joints.

END OF SECTION

THIS PAGE INTENTIONALLY LEFT BLANK

SECTION 15121

PIPE COUPLINGS

PART 1 GENERAL

1.01 SUMMARY

A. Section includes:
   1. Pipe couplings for ductile iron piping.
   2. Pipe couplings for carbon steel piping.
   3. Pipe couplings for stainless steel piping.

1.02 REFERENCES

A. American National Standards Institute (ANSI).

B. American Society of Mechanical Engineers (ASME):
   1. B31.1 - Power Piping.
   2. B31.9 - Building Services Piping.

C. American Water Works Association (AWWA):
   1. C111 - Standard for Rubber-Gasket Joints for Ductile-Iron Pressure Pipe and Fittings.
   2. C207 - Standard for Steel Pipe Flanges for Waterworks Service - Sizes 4 In. Through 144 In.
   3. C606 - Standard for Grooved and Shouldered Joints.

D. ASTM International (ASTM):
   1. A36 - Standard Specification for Carbon Structural Steel.
   2. A53 - Standard Specification for Pipe, Steel, Black and Hot-Dipped, Zinc-Coated, Welded and Seamless.
   3. A193 - Standard Specification for Alloy Steel and Stainless Steel Bolting Materials for High Temperature or High Pressure Service and Other Special Purpose Applications.
   4. A240 - Standard Specification for Chromium and Chromium-Nickel Stainless Steel Plate, Sheet, and Strip for Pressure Vessels and for General Applications.
   5. A325 - Standard Specification for Structural Bolts, Steel, Heat Treated, 120/105 ksi Minimum Tensile Strength.
   6. A351 - Standard Specification for Castings, Austenitic, for Pressure-Containing Parts.
   7. A449 - Standard Specification for Hex Cap Screws, Bolts and Studs, Steel, Heat Treated, 120/105/9 ksi Minimum Tensile Strength, General Use.
   8. A536 - Standard Specification for Ductile Iron Castings.
   9. A563 - Standard Specification for Carbon and Alloy Steel Nuts.
   10. A576 - Standard Specification for Steel Bars, Carbon, Hot-Wrought, Special Quality.
   11. D2000 - Standard Classification System for Rubber Products in Automotive Applications.

    12. F593 - Standard Specification for Stainless Steel Bolts, Hex Cap Screws, and Studs.
    13. F594 - Standard Specification for Stainless Steel Nuts.

E. NSF International (NSF).
    1. 61 - Drinking Water System Components - Health Effects.
    2. 372 - Drinking Water System Components - Lead Content.

1.03 SUBMITTALS

A. Submit as specified in Section 01330 - Submittal Procedures.

B. Product data:
    1. For each product in this Section as applicable:
        a. Design features.
        b. Load capacities.
        c. Material designations by UNS alloy number or ASTM Specification and Grade.
        d. Data needed to verify compliance with the Specifications.
        e. Catalog data.
        f. Clearly mark submittal information to show specific items, materials, and accessories or options being furnished.

C. Calculations.
    1. Provide calculations in accordance with NSF 372 for materials in contact with drinking water.

1.04 WARRANTY

A. Provide warranty as specified in Section 01783 - Warranties and Bonds.

PART 2 PRODUCTS

2.01 GENERAL

A. As specified in Section 01600 - Product Requirements:
    1. Materials in contact with drinking waters: In accordance with NSF 61 and NSF 372.

B. Known acceptable manufacturers are listed by specific products.

C. Provide references as specified in this Section by specific product.

D. Manufacturer’s representative requirements as specified in Section 01756 - Commissioning and this Section by specific product.

E. Gaskets for flexible couplings and flanged coupling adapters:
    1. Provide gasket materials for piping applications as follows:
        a. Low-pressure and high-pressure air, steam, hot water: EPDM.
        b. All other piping applications: Neoprene rubber or Buna-N.

F. Exterior coatings for underground and submerged applications:
  1. Manufacturers: One of the following or equal:
    a. Tapecoat Company, Inc., T.C. Mastic.
    b. Kop-Coat Company, Inc., Bitumastic Number 50.
  2. Thickness: Minimum 0.040 inch.

2.02 PIPE COUPLINGS FOR DUCTILE IRON PIPING

A. Dismantling joints:
  1. Manufacturers: One of the following or equal:
    a. Romac Industries, Inc., Style DJ400.
    b. Smith-Blair, Inc., Series 975.
  2. Materials:
    a. Flanged spool: AWWA C207 steel pipe:
      1) ASTM A53 for sizes 3 inches to 12 inches.
      2) ASTM A36 for sizes 14 inches to 72 inches.
    b. End ring and body:
      1) For sizes 3 inches to 12 inches, ductile iron in accordance with ASTM A536.
      2) For sizes 14 inches to 72 inches, steel in accordance with ASTM A36 or A53.
    c. Follower ring: Ductile iron in accordance with ASTM A536.
    d. Bolts and hex nuts:
      1) Aboveground: High strength, low alloy steel in accordance with AWWA C111.
      2) Buried and underwater: Type 316 stainless steel bolts in accordance with ASTM F593.
    e. Tie rods: High tensile steel in accordance with ASTM A193 Grade B7.
  3. Flange design: Class D steel ring flange in accordance with AWWA C207, compatible with ANSI Class 125 and 150 bolt circles.
  4. Coating and lining: Manufacturer’s standard fusion bonded epoxy, NSF 61 certified.

B. Flanged coupling adapters: 12-inch size and smaller:
  1. Manufacturers: One of the following or equal:
    a. Dresser, Inc., Style 227.
    b. Romac Industries, Inc., Style FCA501.
    c. Smith-Blair, Inc., Series 912.
  2. Materials:
    a. Flanged body: Ductile iron in accordance with ASTM A536.
    b. Follower ring: Ductile iron in accordance with ASTM A536.
    c. Bolts and hex nuts:
      1) Aboveground: High strength, low alloy steel in accordance with AWWA C111.
      2) Buried and underwater: Type 316 stainless steel bolts in accordance with ASTM F593.
  3. Flange design: Class D steel ring flange in accordance with AWWA C207 compatible with ANSI Class 125 and 150 bolt circles.
  4. Coating and lining: Manufacturer’s standard fusion bonded epoxy, NSF 61 certified.

C. Flanged coupling adapters: Greater than 12-inch size:
  1. Manufacturers: One of the following or equal:
    a. Dresser, Inc., Style 128-W.
    b. Romac Industries, Inc., Style FC400.
    c. Smith-Blair, Inc., Series 913.
  2. Materials:
    a. Flange and flanged body: Ductile iron or low carbon steel having a minimum yield strength of 30,000 pounds per square inch.
    b. Follower ring: Low carbon steel having a minimum yield strength of 30,000 pounds per square inch.
    c. Bolts and hex nuts:
      1) Aboveground: High strength, low alloy steel in accordance with AWWA C111.
      2) Buried and underwater: Type 316 stainless steel bolts in accordance with ASTM F593.
  3. Flange design: Class D steel ring flange in accordance with AWWA C207 compatible with ANSI Class 125 and 150 bolt circles.
  4. Coating and lining: Manufacturer’s standard fusion bonded epoxy, NSF 61 certified.

D. Flexible couplings:
  1. Manufacturers: One of the following or equal:
    a. Dresser, Inc., Style 253.
    b. Romac Industries, Inc., Style 501.
    c. Smith-Blair, Inc., Series 441.
  2. Materials:
    a. Center rings: Ductile iron in accordance with ASTM A536.
    b. Follower rings: Ductile iron in accordance with ASTM A536.
    c. Bolts and hex nuts:
      1) Aboveground: High strength, low alloy steel in accordance with AWWA C111.
      2) Buried and underwater: Type 316 stainless steel in accordance with ASTM F593.
  3. Coating and lining: Manufacturer’s standard fusion bonded epoxy, NSF 61 certified.
  4. Center sleeve dimensions: Provide center sleeves with lengths in accordance with following table:

Nominal Pipe Size	**Sleeve Length**
3 inch and smaller	Manufacturer’s standard
4 inch through 8 inch	7 inches
10 inch through 14 inch	12 inches
Greater than 16 inch	Use steel flexible coupling per Pipe Couplings for Steel Piping

E. Restrained flange coupling adapter:
  1. Manufacturers: One of the following or equal:
    a. Romac Industries, Inc., Style RFCA.
    b. Star Pipe Products, 3200 StarFlange.

2. Materials:
   a. Flange and flanged body: Ductile iron in accordance with ASTM A536.
   b. Follower ring: Lug type restraint system.
      1) Follower ring: Ductile iron in accordance with ASTM A536.
      2) Restraining lugs: Ductile iron in accordance with ASTM A536.
         a) Designed to contact the pipe and apply forces evenly.
      3) Restraining bolts:
         a) Ductile iron in accordance with ASTM A536.
         b) Bolt heads shall be designed to twist off when the proper torque has been applied.
   c. Bolts and hex nuts:
      1) Aboveground: High strength, low alloy steel in accordance with AWWA C111.
      2) Buried and underwater: Type 316 stainless steel bolts in accordance with ASTM F593.
3. Flange design: Class D steel ring flange in accordance with AWWA C207 compatible with ANSI Class 125 and 150 bolt circles.
4. Coating and lining: Manufacturer’s standard fusion bonded epoxy, NSF 61 certified.
5. Angular deflection: Restrained flange coupling adapter must allow angular deflection after assembly.

PART 3 EXECUTION

3.01 INSTALLATION

A. In underground and underwater installations, coat the exterior of coupling with a protective coating in accordance with manufacturer's instructions.

B. Joints and flexible connections shall be installed centered with no angular deflection unless otherwise indicated on the Drawings.

C. Flexible couplings and flange coupling adapters: Install with gap between pipe ends in accordance with the following table unless a greater gap is indicated on the Drawings. Maximum gap tolerance shall be within 1/8 inch.
   1. Install flexible coupling with pipe gap located in middle of center sleeve.
   2. Install flanged coupling adapter with end of plain end pipe in middle of flanged coupling body.

Center Ring Length	Gap Dimension and Tolerance
4 inch through 6 inch	3/8 inch
7 inch	5/8 inch
10 inch and greater	7/8 inch

D. Provide harnesses (tie-downs) for flexible couplings unless otherwise indicated on the Drawings with a written note.
   1. Design harnesses (tie-downs) for the test pressures as specified in the Piping Schedule in Section 15052 - Common Work Results for General Piping.

E. Bolted, split-sleeve couplings:
  1. Inspect each coupling to ensure that there are no damaged portions of the coupling.
     a. Pay particular attention to the sealing pad/sealing plate area.
     b. Before installation, thoroughly clean each coupling of any foreign substance which may have collected thereon and shall be kept clean at all time.
  2. Wrenches:
     a. Conform to manufacturer instructions.
     b. Bolts and studs shall be tightened so as to secure a uniform gasket compression between the coupling and the body of the pipe with all bolts or studs tightened approximately the same amount.
     c. Final tightening shall be done by hand (no air impact wrenches) and is complete when the coupling is in uniform contact with the outside surface of the pipe all around the circumference of the pipe.
  3. No joint shall be misfit in any plane.
  4. On the fixed ends of bolted, split-sleeve couplings, the shoulders shall bear on the restraint rings all around with no visible gap.
  5. Ends of piping where coupler is installed shall be smooth and free of defects.
     a. Remove weld splatter and grind smooth.
     b. Grind pipe seam welds flush with pipe wall and smooth.

END OF SECTION

SECTION 15122

FIRE HYDRANTS

PART 1 GENERAL

1.01 SUMMARY

A. Section includes: Barrel type fire hydrants.

1.02 REFERENCES

A. American Water Works Association (AWWA):
   1. C 502 - Standard for Dry-Barrel Fire Hydrants.

PART 2 PRODUCTS

2.01 MANUFACTURERS

A. Manufacturers: Per PCU USSM.

2.02 MATERIALS

A. Fire hydrants:
   1. Dry barrel in accordance with type AWWA C 502, as complemented and modified in this Section.
   2. Provide hydrants with ground level break-off feature and manufactured such that the valve stem will not be bent when the hydrant is damaged or broken at or near the ground level.
   3. When shut, provide valves that remain reasonably tight when the upper portion of the barrel is broken off.
   4. Diameter of the main valve opening: Not less than 4 inches.
   5. Inlet connection: 6-inch diameter mechanical joint for ductile iron pipe.
   6. Provide two 2-1/2-inch hose nozzles and one 4-inch pumper nozzle facing the street.
      a. Provide nozzles with hose caps chained to the hydrant barrel.
      b. Nozzle threads: National standard hose thread.
   7. Hydrants: Furnish with drain valve.
   8. Color of hydrant above ground.

PART 3 EXECUTION

3.01 INSTALLATION

A. Per PCU USSM.

B. Install hydrants with proper extension so that branch pipe to hydrant and supply main are at the same elevation.

C. Attach auxiliary 6-inch gate valves by mechanical joint at 18 inches from the hydrant joint and attach piping ductile iron to the supply.

D. Firmly set hydrants on a bed of coarse gravel.

END OF SECTION

SECTION 15125

STRAINERS

PART 1 GENERAL

1.01 SUMMARY

A. Section includes: Strainers.

1.02 REFERENCES

A. ASTM International (ASTM):
   1. A126 - Standard Specification for Gray Iron Castings for Valves, Flanges, and Pipe Fittings.
   2. A420 - Standard Specification for Piping Fittings of Wrought Carbon Steel and Alloy Steel for Low-Temperature Service.

B. Society of Automotive Engineers (SAE).

1.03 SUBMITTALS

A. Submit as specified in Section 01330 - Submittal Procedures.

B. Product data: As specified in Section 15052 - Common Work Results for General Piping.

PART 2 PRODUCTS

2.01 Y-TYPE STRAINERS

A. Y-type strainers 4 inches and larger in diameter:
   1. Materials:
      a. Bodies: Cast iron or semi-steel.
      b. Ends: Flanged.
      c. Screens: Brass or Type 304 stainless steel.
   2. Suitable for following minimum pressure conditions:
      a. Steam service: 250 pounds per square inch gauge.
      b. Water, oil, and gas service: 200 pounds per square inch gauge.
   3. Perforated screens:
      a. Openings: 0.045 inches.
      b. Active screen opening to pipe area ratio: 2.8, minimum.
      c. Free area: 37 percent minimum.
   4. Manufacturers: One of the following or equal:
      a. Armstrong International Inc., Code A1.
      b. ITT/Hoffman, 460 Series.

B. Y-type strainers less than 4 inches in diameter:
  1. Materials:
    a. Bodies: Cast iron or semi-steel.
    b. Ends: Flanged or threaded.
    c. Screen: Brass or Type 304 stainless steel.
  2. Suitable for minimum pressure of 250 pounds per square inch gauge.
  3. Screens: Perforations: 1/32 inch.
  4. Manufacturers: One of the following or equal:
    a. Armstrong, Y-Type Strainer.

2.02 BASKET TYPE STRAINERS

A. Provide basket type strainers single or duplex as indicated on the Drawings.

B. Manufacturers:
  1. Single basket strainers: One of the following or equal:
    a. Fluid Engineering, Series 528B.
    b. Mueller Steam Specialty.
  2. Double basket strainers: One of the following or equal:
    a. Fluid engineering, Series 534 for sizes 1-1/2 inch to 8 inch, and Series 424 for sizes 10 inch and larger.
    b. Mueller Steam Specialty.
  3. Basket strainers for chemical service:
    a. Dual or simplex as indicated on the Drawings; baskets and bodies PVC; gaskets Viton or EPDM as required for the chemical service; basket mesh size to be specified by the Engineer during shop drawing review.
    b. Manufacturer: Hayward.

PART 3 EXECUTION

3.01 INSTALLATION

A. Install in accordance with the manufacturer's recommendations.

3.02 COMMISSIONING

A. As specified in Section 01756 - Commissioning and this Section.

B. Manufacturer services for mechanically cleaned strainers, only:
  1. Provide certificates:
    a. Manufacturer’s Certificate of Installation and Functionality Compliance.
  2. Manufacturer’s Representative onsite requirements:
    a. Installation: 1 trip, 1 day minimum.
    b. Functional Testing: 1 trip,1 day minimum each.
  3. Training:
    a. Maintenance: 2 hours per session, 2 sessions.
    b. Operation: 1 hour per session, 2 sessions.
  4. Process Operational Period:
    a. As required by Owner or Contractor.

C. Functional testing:
  1. Mechanically cleaned strainers only:
    a. Test witnessing: Witnessed.
    b. Conduct Level 1 General Equipment Performance Test.

END OF SECTION

THIS PAGE INTENTIONALLY LEFT BLANK

SECTION 15211

DUCTILE IRON PIPE: AWWA C151

PART 1 GENERAL

1.01 SUMMARY

A. Section includes: Ductile iron pipe, joints, fittings, gaskets, and pipe linings and coatings.

1.02 REFERENCES

A. American Society of Mechanical Engineers (ASME):
  1. B16.1 - Gray Iron Pipe Flanges and Flanged Fittings: Classes 25, 125, and 250.

B. American Water Works Association (AWWA):
  1. C104 - Standard for Cement-Mortar Lining for Ductile-Iron Pipe and Fittings.
  2. C105 - Polyethylene Encasement for Ductile-Iron Pipe Systems.
  3. C110 - Standard for Ductile-Iron and Gray-Iron Fittings.
  4. C111 - Standard for Rubber-Gasket Joints for Ductile-Iron Pressure Pipe and Fittings.
  5. C115 - Flanged Ductile Iron Pipe with Ductile-Iron or Gray-Iron Threaded Flanges.
  6. C150 - Standard for Thickness Design of Ductile-Iron Pipe.
  7. C151 - Standard for Ductile-Iron Pipe, Centrifugally Cast.
  8. C600 - Installation of Ductile Iron Water Mains and Their Appurtenances.
  9. C606 - Standard for Grooved and Shouldered Joints.

C. American Welding Society (AWS):
  1. D11.2 - Guide for Welding Iron Castings.

D. ASTM International (ASTM):
  1. A47 - Standard Specifications for Ferritic Malleable Iron Castings.
  2. A183 - Standard Specifications for Carbon Steel Track Bolts and Nuts.
  3. A536 - Standard Specifications for Ductile Iron Castings.
  4. C283 - Standard Test Methods for Resistance of Porcelain Enameled Utensils to Boiling Acid.
  5. D792 - Standard Test Methods for Density and Specific Gravity (Relative Density) of Plastics by Displacement.

E. Ductile Iron Pipe Research Association (DIPRA):
  1. Thrust Restraint Design Manual.

F. NACE International (NACE):
  1. SP0188 - Discontinuity (Holiday) Testing of New Protective Coatings on Conductive Substrates.

G. National Association of Pipe Fabricators, Inc. (NAPF):
   1. 500-03 - Surface Preparation Standard for Ductile Iron Pipe and Fittings in Exposed Locations Receiving Special External Coatings and/or Special Internal Linings.

H. Society for Protective Coatings (SSPC):
   1. PA-2 - Measurement of Dry Coating Thickness With Magnetic Gages.

1.03 SYSTEM DESCRIPTION

A. Thrust restraint system design:
   1. Design restrained joint thrust restraint system.
   2. Determine the length of pipe that must be restrained on each side of the focus of a thrust load in accordance with the procedures and criteria established by the DIPRA Thrust Restraint Design Manual as specified in Piping Schedule in Section 15052 - Common Work Results for General Piping and the following additional criteria:
      a. Design pressure: Test pressure.
      b. Laying condition: Type 3 in accordance with AWWA C150.
      c. Soil designation: Silt 1 as defined by DIPRA.
      d. Unit friction resistance: Based upon polyethylene encasement of pipe.
      e. Safety factor: 1.5 (for thrust restraint calculations only).

1.04 SUBMITTALS

A. Submit as specified in Section 01330 - Submittal Procedures.

B. Product data: As specified in Section 15052 - Common Work Results for General Piping.

C. Shop drawings:
   1. Detailed layout drawings showing alignment of pipes, location of valves, fittings, and appurtenances, types of joints, and connections to pipelines or structures.
   2. Thrust restraint systems layouts.
   3. Photographs, drawings, and descriptions of fittings, gaskets, couplings, grooving of pipe and fittings, pipe linings, and coatings.

D. Calculations:
   1. Calculations for thrust restraint system design.

E. Provide manufacturer’s test reports:
   1. On special lining certifying successful performance of holiday detection tests.
      a. This documentation shall identify each piece by mark designation, and show the actual test results during the final inspection by the manufacturer prior to shipment.
      b. Acceptance criteria for glass lining shall be as specified under Field Quality Control.
   2. On glass-lined pipe certifying compliance with specified material requirements for glass-lining.
   3. Include Coating Manufacturer’s Technical Representative’s reports.

1.05 QUALITY ASSURANCE

A. Pre-installation meeting:
   1. Arrange for Coating Manufacturer's Technical Representative to attend preconstruction conferences, and to make periodic visits to factory or shop to inspect surface preparation of pipe, fittings, and accessories; and to inspect application of linings to interior and coatings to exterior of pipe, fittings, and accessories.

1.06 DELIVERY, STORAGE, AND HANDLING

A. Block piping and associated fittings for shipment to prevent damage to coatings and linings.

B. Carefully handle piping and associated fittings during loading, unloading, and installation:
   1. Do not drop piping material from cars or trucks.
   2. Lower piping by mechanical means.
   3. Do not drop or pound pipe to fit grade.

C. Special lined pipe and fittings must be handled only from the outside:
   1. No forks, chains, straps, hooks, or other lifting device shall be placed inside the pipe or fittings for lifting, positioning, or laying.

D. Protect gaskets and polyethylene encasement from long-term exposure to sunlight.

E. Store piping, fittings, and other accessories such that they do not accumulate and hold rainwater, dirt, and debris.

PART 2 PRODUCTS

2.01 MANUFACTURED UNITS

A. Ductile iron piping:
   1. Manufacturers per PCU USSM.
   2. Typical type:
      a. In accordance with AWWA C150 and AWWA C151.
      b. Pressure class or special thickness class as indicated on the Drawings.
      c. Manufactured from greater than 90 percent recycled material.
   3. Type with screw-on flanges:
      a. In accordance with AWWA C115 with minimum special thickness Class 53 wall thickness as required for screw-on flanges.
      b. Special thickness class as indicated in the Piping Schedule as specified in Section 15052 - Common Work Results for General Piping.
      c. Manufactured from greater than 90 percent recycled material.

B. Joints:
   1. Flanged joints:
      a. Screw-on flanges: Comply with the diameter, thickness, drilling, and other characteristics in accordance with ASME B16.1. In addition, comply with the following requirements:
         1) Ductile iron.

            2) Long hub, threaded, and specially designed for ductile iron pipe.
            3) After attaching to pipe, machine flange face to make pipe end and flange even and perpendicular to the axis of the pipe.
        b. Bolt holes on flanges: 2-holed and aligned at both ends of pipe.
        c. Cap screw or stud bolt holes: Tapped.
        d. Bolts and nuts: As specified in Section 15052 - Common Work Results for General Piping.
        e. Gaskets: Standard styrene butadiene copolymer (SBR) unless specified otherwise in Section 15052 - Common Work Results for General Piping.
    2. Mechanical joints: In accordance with PCU USSM.
    3. Push-on rubber gasket joints: In accordance with PCU USSM.
    4. Mechanical wedge action joint restraints:
        a. Manufacturers: Per PCU USSM:
        b. Materials: Per PCU USSM.
        c. Coatings:
            1) Provide manufacturer applied coating system.
        d. Working pressure:
            1) Shall include a minimum safety factor of 2:1.
            2) For sizes 3- through 16-inch: 350 pounds per square inch.
            3) For sizes 18- through 48-inch: 250 pounds per square inch.
        e. Restraint shall consist of multiple gripping wedges incorporated into a follower gland meeting the requirements of AWWA C111.
        f. Restraint shall allow post assembly angular deflection that is a minimum of 50 percent of the angular deflection allowed by the mechanical joint.
        g. Restraint must be in accordance with applicable requirements of AWWA C110 and AWWA C111 for mechanical joints.
    5. Push-on joint restraint harnesses:
        a. Manufacturers: Per PCU USSM.
        b. Materials: Per PCU USSM.
        c. Coatings:
            1) Provide manufacturer applied coating system.
        d. Working pressure:
            1) Shall include a minimum safety factor of 2:1.
            2) For sizes 3- through 16-inch: 350 pounds per square inch.
        e. Restraint shall consist of a backup ring behind the ductile iron bell and a restraint ring consisting of multiple gripping wedges connected with number and type of tie rods as recommended by the manufacturer.
        f. Restraint shall allow post assembly deflection of a minimum of 50 percent of the deflection capability of the push-on joint.

C. Fittings:
    1. Ductile iron in accordance with PCU USSM.
    2. Joint type: Same as that of the associated piping as specified in Section 15052 - Common Work Results for General Piping.
    3. Plain end-to-flanged joint connectors using setscrews are not acceptable.

D. Pipe linings:
    1. Cement-mortar lining:
        a. In accordance with AWWA C104, apply cement-mortar on clean bare metal surfaces. Extend to faces of flanges, ends of spigots, and shoulders of hubs.

        - b. Minimum lining thickness: Standard Double in accordance with AWWA C104.
        - c. Type of cement: Type V.
    - 2. Asphaltic seal coat:
        - a. Apply over cement mortar linings and to outside surface of pipes that will not receive another coating. Apply in accordance with AWWA C151. Provide NSF approval

- E. Coatings:
    - 1. Asphalt varnish: Factory applied.
    - 2. Primer:
        - a. Factory applied for field coating.
        - b. Compatible with materials as specified in Section 09960 - High-Performance Coatings.
    - 3. Speciality coatings - Refer to Pipe Schedule Table per Section 15052 - Common Work Results for General Piping and Section 09960 - High-Performance Coatings.

PART 3 EXECUTION

3.01 INSTALLATION

- A. General:
    - 1. Install ductile iron piping in accordance with AWWA C600, modified as specified in Section 15052 - Common Work Results for General Piping.
    - 2. For underground piping, the trenching, backfill, and compaction: As specified in Section 02318 - Trenching.
    - 3. Install underground pipe with warning tape and marker balls as specified in Section 15076 - Pipe Identification and PCU USSM, latest edition.

- B. Joints:
    - 1. Install types of joints as specified in the piping schedule provided in Section 15052 - Common Work Results for General Piping.
    - 2. Mechanical joints are not acceptable in above ground applications.
    - 3. Field closure for restrained push-on pipe:
        - a. Locate field closures in areas where thrust calculations demonstrate restraint is not required.
    - 4. Grooved joints:
        - a. Install piping with grooved joints where specified in the piping schedule as specified in Section 15052 - Common Work Results for General Piping or indicated on the Drawings.
        - b. Assemble grooved joints in accordance with manufacturer's published instructions.
        - c. Support grooved-end pipe in accordance with manufacturer's published instructions.
            - 1) Install at least 1 support between consecutive couplings.

C. Tapping ductile iron pipe:
   1. Direct tapping of ductile iron pipe may be performed but is limited to the following conditions:
      a. Maximum allowable tap diameter by pipe diameter and pressure class:

Pipe Size (inches)	**Pressure Class**				
	150	**200**	**250**	**300**	**350**
	Maximum Allowable Direct Tap Size (inches)				
3	--	--	--	--	3/4
4	--	--	--	--	3/4
6	--	--	--	--	1
8	--	--	--	--	1
10	--	--	--	--	1
12	--	--	--	--	1-1/4
14	--	--	1-1/4	1-1/2	1-1/2
16	--	--	1-1/2	2	2
18	--	--	2	2	2
20	--	--	2	2	2
24	--	2	2	2	2

      b. The maximum allowable tap diameter for pipelines greater than 24 inches is 2 inches.
      c. Two layers of 3-mil thread sealant are required to minimize the torque required to effect a watertight connection.

3.02 FIELD QUALITY CONTROL

A. Testing ductile iron piping:
   1. Test as specified in Section 15052 - Common Work Results for General Piping and Section 15956 - Piping Systems Testing.
   2. Do not test sections longer than 1/2 mile in total pipe length.

B. Repair damaged cement mortar lining to match quality, thickness, and bonding of original lining in accordance with AWWA C104.
   1. When lining cannot be repaired or repairs are defective, replace defective piping with undamaged piping.

END OF SECTION

SECTION 15238

PLASTIC TUBING

PART 1 GENERAL

1.01 SUMMARY

A. Section includes: Small bore plastic tubing.

1.02 REFERENCES

A. American Water Works Association (AWWA).

B. ASTM International (ASTM):
   1. D3296- Standard Specification for FEP - Fluorocarbon Tube.

1.03 ABBREVIATIONS

A. ID: Inside diameter of piping or tubing.

B. NS: Nominal size of piping or tubing.

C. OD: Outside diameter of piping or tubing.

1.04 SUBMITTALS

A. Submit as specified in Section 01330 - Submittal Procedures.

B. Product data: As specified in Section 15052 - Common Work Results for General Piping.

1.05 QUALITY ASSURANCE

A. Mark tubing with nominal size, type, class, schedule, or pressure rating, manufacturer and all markings required in accordance with ASTM D3296 and AWWA standards.

1.06 DELIVERY, STORAGE, AND HANDLING

A. Protect from sunlight, scoring, and distortion.

B. Do not allow surface temperatures to exceed 120 degrees Fahrenheit.

C. Store and handle as recommended by manufacturer in published instructions.

PART 2 PRODUCTS

2.01 MATERIALS

A. Provide odorless and tasteless flexible clear fluorinated ethylene propylene (FEP) fluoropolymer virgin tubing with smooth inside bore and smooth outside. Shore Durometer hardness shall be 57 to 60, “D” scale.

1. Minimum operating pressures at 73 degrees Fahrenheit shall be as follows:
    a. 307 pounds per square inch for ID of 1/4 inch.
    b. 230 pounds per square inch for ID of 3/8 inch.
    c. 184 pounds per square inch for ID of 1/2 inch.
    d. 153 pounds per square inch for ID of 5/8 inch.
2. Temperature range: -100 to 400 degrees Fahrenheit.
3. Tubing shall have high resistance to stress cracking.
4. Tubing shall be chemically inert.
5. Tubing shall be ultraviolet resistant.
6. Fittings:
    a. Flare or conventional fittings compatible with fluid and at same pressure of tubing.

PART 3 EXECUTION

3.01 INSTALLATION

A. Prior to assembling hose and components such as fittings and connectors, carefully examine components for correct material, style, size, catalog number, and length. Examine hoses for cleanliness, obstructions, blisters, cover looseness or damage, kinks, cracks, cuts, or any other visible defects. Inspect the fitting and sealing surfaces for burrs, nicks, corrosion, or other imperfections. Do not use any components that display such signs of nonconformance.

B. Install tubing in accordance with manufacturer's printed instructions, in neat straight lines, supported at close enough intervals to avoid sagging, and in continuous runs wherever possible.

C. Bundle tubing in groups of parallel tubes within protective sheath.

D. Grade tubing connected to meters in one direction.

END OF SECTION

SECTION 15241

HIGH DENSITY POLYETHYLENE (HDPE) PIPE: AWWA C906

PART 1 GENERAL

1.01 SUMMARY

A. Section includes: High Density Polyethylene Pipe (HDPE), and fittings.

1.02 REFERENCES

A. American Water Works Association (AWWA):
   1. C906 - Standard for Polyethylene (PE) Pressure Pipe and Fittings, 4 in. Through 63 in., for Water Distribution.

B. ASTM International (ASTM):
   1. D1238 - Standard Test Method for Melt Flow Rates of Thermoplastics by Extrusion Plastometer.
   2. D1505 - Standard Test Method for Density of Plastics by the Density-Gradient Technique.
   3. D1599 - Standard Test Method for Resistance to Short-Time Hydraulic Pressure of Plastic Pipe, Tubing, and Fittings.
   4. D1603 - Standard Test Method for Carbon Black Content in Olefin Plastics.
   5. D2122 - Standard Test Method for Determining Dimensions of Thermoplastic Pipe and Fittings.
   6. D2290 - Standard Test Method for Apparent Hoop Tensile Strength of Plastic or Reinforced Plastic Pipe by Split Disk Method.
   7. D3261 - Standard Specification for Butt Heat Fusion Polyethylene (PE) Plastic Fittings for Polyethylene (PE) Plastic Pipe and Tubing.
   8. D3350 - Standard Specification for Polyethylene Plastic Pipe and Fittings Material.
   9. F645 - Standard Guide for Selection, Design, and Installation of Thermoplastic Water-Pressure Piping Systems.
   10. F714 - Standard Specification for Polyethylene (PE) Plastic Pipe (SDR-PR) Based on Outside Diameter.

C. International Organization of Standardization (ISO):
   1. 10863 - Non-destructive testing of welds - Ultrasonic testing - Use of time-of-flight diffraction technique (TOFD).

D. Plastic Pipe Institute (PPI):
   1. PE 4710.

1.03 ABBREVIATIONS

A. HDPE: High-density polyethylene pipe.

B. ID: Inside diameter of piping or tubing.

C. OD: Outside diameter.

D. SDR: Standard dimension ratio.

1.04 SUBMITTALS

A. Submit as specified in Section 01330 - Submittal Procedures.

B. Shop drawings:
   1. Detailed layout drawings showing alignment of pipes, location of valves, fittings, and appurtenances, types of joints, and connections to pipelines or structures.

C. Product data: As specified in Section 15052 - Common Work Results for General Piping:
   1. Describe materials and installation equipment including fusion machine. Include optimum range of fusion conditions such as fusion temperature, interface pressure, and cooling time Pipe loads and structural calculations.
   2. Installation instructions.

D. Qualifications of installation crew for high-density polyethylene pipe including qualifications of the fusion machine technician. Furnish proof of training in the use of fusion equipment.

1.05 QUALITY ASSURANCE

A. Markings on the pipe shall be in accordance with AWWA C906.

1.06 DELIVERY, STORAGE, AND HANDLING

A. Protect piping materials from sunlight, scoring, and distortion.

B. Do not allow surface temperatures on pipe and fittings to exceed 120 degrees Fahrenheit.

C. Store and handle PE pipe and fittings as recommended by manufacturer in published instructions.

PART 2 PRODUCTS

2.01 GENERAL

A. In accordance with PCU USSM.

B. In accordance with AWWA C906.

2.02 MATERIALS

A. Fittings: Same material as the pipe and of equal or greater pressure rating.

2.03 HDPE PIPING

A. General:
   1. Pipe and fittings: High-density polyethylene.

2. Dimensions of pipe and fittings: Based on controlled outside diameter in accordance with ASTM F714:
    a. SDR: As given in Piping Schedule, Section 15052 - Common Work Results for General Piping; or, if not given, minimum SDR equals 9.
    b. Pipe Diameter: DIPS dimensions as indicated on the Drawings.
3. Pipe, fittings, and adapters: Furnished by the same manufacturer, or compatible with components in the same system and with components of other systems to which connected.

B. Materials:
1. Manufacturers: Per PCU USSM.
2. Polyethylene: As listed by the PPI under the designation PE 4710; and have a minimum cell classification, in accordance with ASTM D3350, of 445574C:
    a. Pipe and fittings: Manufactured from material with the same cell classification.
    b. Manufacturer shall certify that pipe and fittings meet the above classifications.
3. Polyethylene fittings and custom fabrications:
    a. Molded or fabricated.
    b. Butt fusion outlets shall be made to the same outside diameter, wall thickness, and tolerances as the mating pipe.
    c. All fittings and custom fabrications shall be fully rated for the same internal pressure as the mating pipe.
    d. Pressure de-rated fabricated fittings are prohibited.
4. Molded fittings:
    a. Manufactured in accordance with ASTM D3261, Butt Heat Fusion Polyethylene (PE) Plastic Fittings for Polyethylene (PE) Plastic Pipe and Tubing, and shall be so marked.
    b. Each production lot of molded fittings shall be subjected to the tests required under ASTM D3261.
5. X-ray inspection: The Manufacturer shall submit samples from each molded fittings production lot to x-ray inspection for voids, and shall certify that voids were not found.
6. Fabricated fittings:
    a. Made by heat fusion joining specially machined shapes cut from pipe, polyethylene sheet stock, or molded fittings.
    b. Rated for internal pressure service at least equal to the full-service pressure rating of the mating pipe.
7. Polyethylene flange adapters:
    a. Flange adapters shall be made with sufficient through-bore length to be clamped in a butt fusion joining machine without the use of a stub-end holder.
    b. The sealing surface of the flange adapter shall be machined with a series of small v-shaped grooves to provide gasketless sealing, or to restrain the gasket against blowout.
8. Back-up rings and flange bolts:
    a. Flange adapters shall be fitted with Type 304 or 316 stainless steel back-up rings pressure rated equal to or greater than the mating pipe.
    b. The back-up ring bore shall be chamfered or radiused to provide clearance to the flange adapter radius.
    c. Flange bolts and nuts shall be the same material as backing flange and as specified in Section 15052 - Common Work Results for General Piping.

2.04 SOURCE QUALITY CONTROL

A. HDPE piping:
  1. Manufacturer's quality control: The pipe and fitting manufacturer shall have an established quality control program responsible for inspecting incoming and outgoing materials.
  2. Incoming polyethylene materials:
     a. Inspected for density, melt flow rate, and contamination.
     b. The cell classification properties of the material shall be certified by the supplier and verified by manufacturer's quality control.
     c. Approved by quality control before processing into finished goods.
  3. Outgoing materials shall be checked for:
     a. Outside diameter, wall thickness, and eccentricity in accordance with ASTM D2122 at a frequency of at least once per hour.
     b. Out of roundness at a frequency of at least once per hour.
     c. Straightness, inside and outside surface finish, markings and end cuts shall be visually inspected in accordance with ASTM F714 on every length of pipe:
        1) Quality control shall verify production checks and test for:
           a) Density in accordance with ASTM D1505 at a frequency of at least once per extrusion lot.
           b) Melt Index in accordance with ASTM D1238 at a frequency of at least once per extrusion lot.
           c) Carbon content in accordance with ASTM D1603 at a frequency of at least once per day in accordance with extrusion line.
           d) Quick burst pressure in accordance with ASTM D1599 at a frequency of at least once per day per line.
           e) Ring Tensile Strength in accordance with ASTM D2290 at a frequency of at least once per day per line.
     d. X-ray inspection shall be used to inspect molded fittings for voids and knit line strength shall be tested. All fabricated fittings shall be inspected for joint quality and alignment.
  4. Permanent records: The manufacturer shall maintain permanent QC and QA records.
  5. Compliance tests:
     a. Manufacturer's inspection and testing of the materials.
        1) In case of conflict with manufacturer's certifications, the Contractor, Engineer, or Owner may request retesting by the manufacturer or have retests performed by an outside testing service.
        2) All retesting shall be at the requestor's expense and shall be performed in accordance with this Section.

PART 3 EXECUTION

3.01 INSTALLATION

A. General:
  1. Where not otherwise specified, install piping in accordance with ASTM F645, or manufacturer's published instructions for installation of piping, as applicable to the particular type of piping.

2. Provide molded transition fittings for transitions from HDPE to metal or IPS pipe. Do not thread or solvent weld HDPE pipe.

B. Installation of HDPE piping:
1. Joining:
    a. Heat fusion joining:
        1) Joints between plain end pipes and fittings shall be made by butt fusion, and joints between the main and saddle branch fittings shall be made utilizing saddle fusion employing only procedures that are recommended by the pipe and fitting manufacturer.
        2) The Contractor shall certify, in writing, that persons making heat fusion joints have received training in the manufacturer's recommended procedure and have had at least 3 years current experience in the heat fusion butt welding process.
        3) The Contractor shall maintain records of trained personnel and shall certify that training was received not more than 12 months before commencing construction.
        4) External and internal beads shall not be removed.
    b. Heat fusion training services: The manufacturer shall provide training in the manufacturer's recommended butt fusion and saddle fusion procedures to the Contractor's installation personnel, and to the inspector(s) representing the Owner, prior to the start of construction.
    c. Mechanical joining:
        1) Polyethylene pipe and fittings may be joined together or to other materials by means of flanged connections (flange adapters and back-up rings).
        2) Flexible couplings shall be fully pressure rated and fully thrust restrained such that when installed in accordance with manufacturer's recommendations, a longitudinal load applied to the mechanical coupling will cause the pipe to yield before the mechanical coupling disjoins.
2. Installation:
    a. General:
        1) The Manufacturer shall package products for shipment in a manner suitable for safe transport by commercial carrier.
        2) When delivered, a receiving inspection shall be performed, and any shipping damage shall be reported to the Manufacturer within 7 days.
        3) Damaged pipe shall be promptly removed from the job site.
        4) Installation shall be in accordance with Manufacturer's recommendations, and this specification.
        5) Prior to making a terminal connection of each individual run of HDPE pipe, the temperature of the pipe should be allowed to approach the service temperature at which the pipe is intended to operate.
        6) All necessary precautions shall be taken to ensure a safe working environment in accordance with applicable codes and standards.
    b. Large diameter fabricated fittings: Fabricated fittings shall be butt fused to the end of a pipe.
    c. Mechanical joint and flange installation:
        1) Mechanical joints and flange connections shall be installed in accordance with the manufacturer's recommended procedure.
        2) Flange faces shall be centered and aligned to each other before assembling and tightening bolts.

        3) Every effort shall be made to ensure that the opposing faces of the flange assemblies mate up securely at a temperature approximately the same as the service temperature.
        4) In no case shall the flange bolts be used to draw the flanges into alignment.
        5) Bolt threads shall be lubricated, and flat washers shall be fitted under the flange nuts.
        6) Bolts shall be evenly tightened according to the tightening pattern and torque step recommendations of the manufacturer.
        7) At least 1 hour after initial assembly, flange connections shall be re-tightened following the tightening pattern and torque step recommendations of the manufacturer.
        8) The final tightening torque shall be 100 feet-pounds or less as recommended by the manufacturer.
    d. Pipe handling:
        1) Lift, move, or lower pipe and fittings only with wide fabric choker slings.
        2) Wire rope or chain shall not be used.
        3) Slings shall be of sufficient capacity for the load and shall be inspected before use.
        4) Worn or defective equipment shall not be used.
    e. Excavation, backfill material and backfilling and compacting.

3.02 FIELD QUALITY CONTROL

A. Butt fusion testing on pipe size 14 inches and larger:
    1. The first fusion of each day shall be a trial fusion.
        a. The trial fusion shall be allowed to cool completely.
        b. Fusion test straps shall be cut out.
            1) The test strap shall be 12 inches (minimum) or 30 times the wall thickness in length with the fusion in the center, and 1 inch (minimum) or 1.5 times the wall thickness in width.
        c. Bend the test strap until the ends of the strap touch.
    2. If the fusion fails at the joint, a new trial fusion shall be made, cooled completely and tested.
    3. Butt fusion of pipe to be installed shall not commence until a trial fusion has passed the bent strap test.

B. Data logging and test data:
    1. A data logger shall be installed on the fusion heated joining machine. Data on each joint shall be recorded by the data logger. Data to be recorded shall be minimum temperature of joint fusion and interface pressure of the fused joint.
    2. Recorded data from the fusion data logger and the TOFD shall be transmitted to the Owner daily.

C. Pressure testing:
    1. Conduct in accordance with Section 15956 - Piping Systems Testing low head pressure testing.
    2. Test pressures as specified in Section 15052 - Common Work Results for General Piping.
    3. Temperature of test water shall be no more than 73 degrees Fahrenheit.

END OF SECTION

SECTION 15244

POLYVINYL CHLORIDE (PVC) PIPE: AWWA C900 AND AWWA C905

PART 1 GENERAL

1.01 SUMMARY

A. Section includes:
   1. AWWA C900 and AWWA C905 PVC pipe and fittings.

1.02 REFERENCES

A. American Water Works Association (AWWA):
   1. C111 - Standard for Rubber-Gasket Joints for Ductile-Iron Pressure Pipe and Fittings.
   2. C605 - Standard for Underground Installation of PVC and PVCO Pressure Pipe and Fittings for Water.
   3. C900 - Standard for Polyvinyl Chloride (PVC) Pressure Pipe and Fabricated Fittings, 4 Inches to 12 Inches, for Water Transmission Distribution.
   4. C905 - Standard for Polyvinyl Chloride (PVC) Pressure Pipe and Fabricated Fittings, 14 In. Through 48 In.
   5. M23 - PVC Pipe - Design and Installation Manual.

B. ASTM International (ASTM):
   1. 536 - Standard Specification for Ductile Iron Castings.
   2. D1784 - Standard Specification for Rigid Poly (Vinyl Chloride) (PVC) Compounds and Chlorinated Poly (Vinyl Chloride) (CPVC) Compounds.
   3. D3139 - Standard Specification for Joints for Plastic Pressure Pipes Using Flexible Elastomeric Seals.
   4. F477 - Standard Specification for Elastomeric Seals (Gaskets) for Joining Plastic Pipe.
   5. F645 - Standard Guide for Selection, Design, and Installation of Thermoplastic Water-Pressure Piping Systems.

C. NSF International (NSF):
   1. 61 - Drinking Water System Components - Health Effects.

1.03 ABBREVIATIONS

A. DR: Dimension ratio.

B. NPS: Nominal pipe size followed by the size designation.

1.04 SUBMITTALS

A. Submit as specified in Section 01330 - Submittal Procedures.

B. Product data: As specified in Section 15052 - Common Work Results for General Piping.

C. Shop drawings: As specified in Section 15052 - Common Work Results for General Piping.
   1. Describe materials, pipe, fittings, and gaskets.
   2. Manufacturer's product handling and installation instructions.

1.05 QUALITY ASSURANCE

A. Pipe in potable water applications: Provide pipe bearing NSF 61 seal.

B. Mark plastic pipe with date of extrusion, nominal size, class, manufacturer and all markings required in accordance with ASTM and AWWA standards.

1.06 DELIVERY, STORAGE, AND HANDLING

A. Protect from sunlight, scoring, and distortion.

B. Do not allow surface temperatures to exceed 120 degrees Fahrenheit.

C. Deliver, offload, handle, and store pipe in accordance with manufacturer's or pipe supplier's recommendations and best practices provided by AWWA M23 and AWWA C605, including compliance with minimum recommended bending radius and maximum safe pulling forces for each specific pipe.

PART 2 PRODUCTS

2.01 PIPE

A. General:
   1. Extruding and molding material: Virgin material containing no scrap, regrind, or rework material except where permitted in the referenced standards.
   2. In accordance with AWWA C900 and AWWA C905.
   3. In accordance with PCU USSM.
   4. Made from a PVC compound conforming to cell classification 12454 in accordance with ASTM D1784.
   5. Marked verifying suitability for potable water service in accordance with NSF 61.

B. Pipe:
   1. Bell and spigot:
      a. Pipe with integral bell.
      b. Pressure Class as scheduled in Section 15052 - Common Work Results for General Piping.
      c. Manufacturers: Per PCU USSM.

2.02 FITTINGS

A. In accordance with PCU USSM.

B. Material:
   1. Cast or ductile iron fittings as specified in Section 15211 - Ductile Iron Pipe: AWWA C151, sized for the dimensions of the pipe being used.

C. Equal to or greater pressure rating than the pipe.

2.03 JOINTS

A. Bell and spigot joints:
   1. Push-on or mechanical joint type as identified in the Piping Schedule in Section 15052 - Common Work Results for General Piping.
   2. Gasketed joint assembly: Meet or exceed the requirements in accordance with ASTM D3139.
   3. Factory installed gaskets: Neoprene in accordance with ASTM F477.
   4. Joint restraint at fittings:
      a. Concrete thrust blocks:
         1) Install thrust blocks at all changes in pipe diameter and at all fittings.
         2) Design thrust blocks for both test and peak operating pressures.
      b. Mechanical wedge action joint restraints:
         1) Manufacturers Per PCU USSM.
         2) Materials: Per PCU USSM.
         3) Coatings:
            a) Provide a manufacturer applied coating system.
         4) Consist of multiple gripping wedges incorporated into a follower gland meeting the requirements in accordance with AWWA C111.
         5) Allow post assembly angular deflection that is a minimum of 50 percent of the angular deflection allowed by the mechanical joint.
         6) Pressure rating equal to or greater than that of the pipe on which it is being used and a minimum safety factor of 2:1 for all sizes.
      c. Push-on joint restraint harnesses:
         1) Manufacturers: Per PCU USSM.
         2) Materials: Per PCU USSM.
         3) Coatings:
            a) Provide manufacturer applied coating system.
         4) Consist of a backup ring behind the PVC bell and a restraint ring consisting of multiple gripping wedges connected with number and type of tie rods as recommended by the manufacturer.
         5) Allow post assembly angular deflection that is a minimum of 50 percent of the angular deflection allowed by the push-on joint.
         6) Pressure rating equal to or greater than that of the pipe on which it is being used and a minimum safety factor of 2:1 for all sizes.

2.04 SOURCE QUALITY CONTROL

A. Bell and spigot piping:
   1. Hydrostatic proof testing in accordance with AWWA C900: Test pipe and integral bell to withstand, without failure, 2 times the pressure class of the pipe for a minimum of 5 seconds.
   2. Hydrostatic proof testing in accordance with AWWA C905: Test pipe and integral bell to withstand, without failure, 2 times the pressure class of the pipe for a minimum of 5 seconds.

PART 3 EXECUTION

3.01 INSTALLATION

A. General:
   1. Install piping in accordance with ASTM F645, AWWA C605, the Appendix of AWWA C900 and AWWA C905 and manufacturer's or pipe supplier's published installation instructions.
   2. For open cut installations, install underground warning tape as specified in Section 15076 - Pipe Identification.
   3. Install buried pipe with tracer wire and marker balls as specified in Section 15076 - Pipe Identification and PCU USSM, latest edition.

B. Tapping:
   1. Direct tapping:
      a. Direct taps are allowed for AWWA C900 Class 235 and Class 305 pipe, NPS 6-inch through 12-inch only.
      b. 1-inch is the maximum allowable outlet size for performing a direct tap.
   2. Saddle tapping:
      a. Saddle taps are allowable on all sizes and classes of AWWA C900 pipe.
      b. 2-inch is the maximum allowable outlet size for performing a saddle tap.
      c. As specified in Section 15120 - Piping Specialties for allowable service saddles.
   3. Tapping sleeves:
      a. Tapping sleeves are allowable on all sizes and classes of PVC AWWA C900.
      b. As specified in Section 15120 - Piping Specialties for allowable tapping sleeves.

3.02 FIELD QUALITY CONTROL

A. Leakage test for piping:

   1. Subject to visible leak test and pressure test with maximum leakage allowance, as specified in Section 15956 - Piping Systems Testing.
   2. Pressure test with maximum leakage allowance.
      a. Perform test after placing sufficient backfill.
      b. In areas requiring immediate backfill, test prior to placement of permanent surfacing.
      c. Test pressure: As specified in the Piping Schedule in Section 15052 - Common Work Results for General Piping.
      d. Maximum leakage allowance for bell and spigot pipe is as follows, where the value for leakage is in gallons per 50 joints per hour.

Test Pressure (psi)	**Nominal Pipe Size (inches)**									
	4	**6**	**8**	**10**	**12**	**14**	**16**	**18**	**20**	**24**
50	0.19	0.29	0.38	0.48	0.57	0.67	0.76	0.86	0.96	1.15
75	0.23	0.35	0.47	0.59	0.70	0.82	0.94	1.05	1.17	1.40
100	0.27	0.41	0.54	0.68	0.81	0.95	1.08	1.22	1.35	1.62
125	0.3	0.45	0.6	0.76	0.91	1.06	1.21	1.36	1.51	1.81
150	0.33	0.50	0.66	0.83	0.99	1.16	1.32	1.49	1.66	1.99
175	0.36	0.54	0.72	0.89	1.07	1.25	1.43	1.61	1.79	2.15
200	0.38	0.57	0.76	0.96	1.15	1.34	1.53	1.72	1.91	2.29
225	0.41	0.61	0.81	1.01	1.22	1.42	1.62	1.82	2.03	2.43
250	0.43	0.64	0.85	1.07	1.28	1.50	1.71	1.92	2.14	2.56
275	0.45	0.67	0.90	1.12	1.34	1.57	1.79	2.02	2.24	2.69
300	0.47	0.70	0.94	1.17	1.40	1.64	1.87	2.11	2.34	2.81

END OF SECTION

THIS PAGE INTENTIONALLY LEFT BLANK

SECTION 15249

POLYVINYL CHLORIDE (PVC) PIPE: SCHEDULE TYPE

PART 1 GENERAL

1.01 SUMMARY

A. Section includes: Schedule type PVC pipe and fittings.

1.02 REFERENCES

A. ASTM International (ASTM):
   1. D1784 - Standard Specification for Rigid Poly (Vinyl Chloride) (PVC) Compounds and Chlorinated Poly (Vinyl Chloride) (CPVC) Compounds.
   2. D1785 - Standard Specification for Poly (Vinyl Chloride) (PVC) Plastic Pipe, Schedules 40, 80 and 120.
   3. D2466 - Standard Specification for Poly (Vinyl Chloride) (PVC) Plastic Pipe Fittings, Schedule 40.
   4. D2467 - Standard Specification for Poly (Vinyl Chloride) (PVC) Plastic Pipe Fittings, Schedule 80.
   5. D2564 - Standard Specification for Solvent Cements for Poly (Vinyl Chloride) (PVC) Plastic Piping Systems.
   6. D2855 - Standard Practice for Making Solvent-Cemented Joints with Poly (Vinyl Chloride) (PVC) Pipe and Fittings.
   7. F645 - Standard Guide for Selection, Design, and Installation of Thermoplastic Water-Pressure Piping Systems.

B. NSF International (NSF):
   1. 61 - Drinking Water System Components - Health Effects.

1.03 SUBMITTALS

A. Submit as specified in Section 01330 - Submittal Procedures.

B. Product data: As specified in Section 15052 - Common Work Results for General Piping.

1.04 DELIVERY, STORAGE, AND HANDLING

A. Protect from sunlight, scoring, and distortion.

B. Do not allow surface temperatures to exceed 120 degrees Fahrenheit.

C. Store and handle as recommended by manufacturer in published instructions.

PART 2 PRODUCTS

2.01 MATERIALS

A. Extruding and molding material: Virgin material containing no scrap, regrind, or rework material except where permitted in the referenced standards.
   1. Pipe: Designation PVC 1120 in accordance with ASTM D1785 and appendices:
      a. Extruded from Type I, Grade 1, Class 12454-B material in accordance with ASTM D1784.
      b. Schedule 80 and 40 unless otherwise indicated on the Drawings or specified in the Piping Schedule in Section 15052 - Common Work Results for General Piping.
   2. Fittings: In accordance with ASTM D2467 and ASTM D2466.
      a. Same material as the pipe and of equal or greater pressure rating.
      b. Supplied by pipe manufacturer.
      c. Unions 2-1/2 inches and smaller:
         1) Use socket end screwed unions.
      d. Unions 3 inches and larger:
         1) Use socket flanges with 1/8-inch full-face soft Viton gasket.
   3. Solvent cement:
      a. In accordance with ASTM D2564.
      b. Manufacturers: The following or equal:
         1) IPS Corporation.
         2) Type 724 cement.
      c. Certified by the manufacturer for the service of the pipe.
      d. In potable water applications: Provide solvent cement listed by NSF for potable water applications.
      e. Primer: As recommended by the solvent cement manufacturer.

2.02 SOURCE QUALITY CONTROL

A. Meets or exceeds all quality assurance test requirements stated in ASTM D1785.

PART 3 EXECUTION

3.01 INSTALLATION

A. Install piping in accordance with ASTM F645, or manufacturer's published instructions for installation of piping, as applicable.

B. Provide molded transition fittings for transitions from plastic to metal pipe.
   1. Do not thread pipe.

C. Locate unions where indicated on the Drawings, and elsewhere where required for adequate access and assembly of the piping system.

D. Provide serrated nipples for transition from pipe to rubber hose.

E. Solvent weld joints in accordance with ASTM D2855.

F. For open cut installations, install underground warning tape as specified in Section 15076 - Pipe Identification.

G. Install buried pipe with tracer wire and marker balls as specified in Section 15076 - Pipe Identification and PCU USSM, latest edition

3.02 FIELD QUALITY CONTROL

A. Test pipe as specified in Section 15052 - Common Work Results for General Piping and Section 15956.

END OF SECTION

THIS PAGE INTENTIONALLY LEFT BLANK

SECTION 15286

STAINLESS STEEL PIPE AND TUBING

PART 1 GENERAL

1.01 SUMMARY

A. Section includes: Stainless steel piping and tubing.

1.02 REFERENCES

A. American Society of Mechanical Engineers (ASME):
   1. B16.5 - Pipe Flanges and Flanged Fittings: NPS 1/2 through 24.
   2. B16.11 - Forged Fittings, Socket-Welded and Threaded.
   3. B31.3 - Process Piping.
   4. B36.19 - Stainless Steel Pipe.

B. American Welding Society (AWS):
   1. D1.6 - Structural Welding Code - Stainless Steel.

C. ASTM International (ASTM):
   1. A182 - Standard Specification for Forged or Rolled Alloy and Stainless Steel Pipe Flanges, Forged Fittings, and Valves and Parts for High-Temperature Service.
   2. A193 - Standard Specification for Alloy-Steel and Stainless Steel Bolting for High Temperature or High Pressure Service and Other Special Purpose Applications.
   3. A194 - Standard Specification for Carbon and Alloy Steel Nuts and Bolts for High Pressure or High Temperature Service, or Both.
   4. A240 - Standard Specification for Chromium and Chromium-Nickel Stainless Steel Plate, Sheet, and Strip for Pressure Vessels and for General Applications.
   5. A269 - Standard Specification for Seamless and Welded Austenitic Stainless Steel Tubing for General Service.
   6. A276 - Standard Specification for Stainless Steel Bars and Shapes.
   7. A312 - Standard Specification for Seamless, Welded, and Heavily Cold Worked Austenitic Stainless Steel Pipes.
   8. A351 - Standard Specification for Castings, Austenitic, for Pressure-Containing Parts.
   9. A380 - Standard Practice for Cleaning, Descaling, and Passivation of Stainless Steel Parts, Equipment, and Systems.
   10. A403 - Standard Specification for Wrought Austenitic Stainless Steel Piping Fittings.
   11. A743 - Standard Specification for Castings, Iron-Chromium, Iron-Chromium-Nickel, Corrosion Resistant, for General Application.
   12. A744 - Standard Specification for Castings, Iron-Chromium-Nickel, Corrosion Resistant, for Severe Service.
   13. A774 - Standard Specification for As-Welded Wrought Austenitic Stainless Steel Fittings for General Corrosive Services at Low and Moderate Temperatures.

14. A778 - Standard Specification for Welded, Unannealed Austenitic Stainless Steel Tubular Products.
15. A789 - Standard Specification for Seamless and Welded Ferritic/Austenitic Stainless Steel Tubing for General Service.
16. A790 - Standard Specification for Seamless and Welded Ferritic/Austenitic Stainless Steel Pipe.
17. A928 - Standard Specification for Ferritic/Austenitic (Duplex) Stainless Steel Pipe Electric Fusion Welded with Addition of Filler Metal.
18. A967 - Standard Specification for Chemical Passivation Treatments for Stainless Steel Parts.
19. B912 - Standard Specification for Passivation of Stainless Steels Using Electro-polishing.

D. NSF International (NSF):
    1. Standard 61 - Drinking Water System Components - Health Effects.

1.03 DESIGN REQUIREMENTS

A. Piping layout: Lay out and fabricate piping systems with piping sections as long as possible, while still allowing shipment, so that joints are minimized.
    1. Piping detail indicated on the Drawings illustrates piping layout and configuration and does not indicate the location of every joint and flexible coupling that may be needed to connect piping sections fabricated in the shop.
    2. Add joints and flexible couplings in a manner that achieves intent of maximizing size of individual piping sections.

B. Shop fabrication: Fabricate piping sections in the shop and pickle and passivate at point of manufacture.

C. Field assembly:
    1. Field welding is prohibited.

1.04 SUBMITTALS

A. Submit as specified in Section 01330 - Submittal Procedures.

B. Product data: As specified in Section 15052 - Common Work Results for General Piping.

C. Shop drawings:
    1. Detailed layout drawings:
        a. Dimensions and alignment of pipes.
        b. Location of valves, fittings, and appurtenances.
        c. Location of field joints.
        d. Location of pipe hangars and supports.
        e. Connections to equipment and structures.
        f. Location and details of shop welds.
    2. Thickness and dimensions of fittings and gaskets.
    3. Photographs, drawings, and descriptions of pipe, fittings, welding procedures, and pickling and passivating procedures.
    4. Material specifications for pipe, gaskets, fittings, and couplings.
    5. Data on joint types and components used in the system including, flanged joints, grooved joint couplings and screwed joints.

PART 2 PRODUCTS

2.01 STAINLESS STEEL PIPE

A. General:
   1. Pipe sizes specified in the Specifications and indicated on the Drawings are nominal.

B. Wall thickness:
   1. As specified in Section 15052 - Common Work Results for General Piping.
   2. Piping less than 3 inches in nominal diameter:
      a. Piping with threaded joints:
         1) Minimum wall thickness corresponding to Schedule 40S.

C. Piping material and manufacturing:
   1. Comply with the requirements outlined in the following table:

Service	Stainless Steel Grade	Pipe Manufacturing Process
Piping less than 3 inches in nominal diameter	Type 304L stainless steel in accordance with ASTM A240	In accordance with ASTM A312

D. Fittings for piping less than 3 inches in diameter:
   1. Material: In accordance with ASTM A240 stainless steel, grade to match the pipe.
   2. Manufacturing standard: In accordance with ASTM A403, Class WP.
   3. Wall thickness and dimensions of fitting: In accordance with ASME B16.11 and as required for the schedule of pipe specified.
   4. End configuration: As needed to comply with specified type of joint.
   5. Forgings in accordance with ASTM A182, or barstock in accordance with ASTM A276. Match forging or barstock material to the piping materials.

E. Piping joints:
   1. Joints in piping 2 inches in diameter and smaller: screwed with Teflon tape thread lubricant, as specified in Section 15052 - Common Work Results for General Piping.

F. Gaskets:
   1. All other service applications: EPDM, nitrile, or other materials compatible with the process fluid.
      a. Drinking water applications: NSF Standard 61 compliant materials only.

G. Fabrication of pipe sections:
   1. Welding: Weld in accordance with ASME B31.3.
   2. Weld seams:
      a. Full penetration welds, free of oxidation, crevices, pits and cracks, and without undercuts.
      b. Provide weld crowns of 1/16 inch with tolerance of plus 1/16 inch and minus 1/32 inch.
      c. Where internal weld seams are not accessible, use gas tungsten-arc procedures with internal gas purge.

d. Where internal weld seams are accessible, weld seams inside and outside using manual shielded metal-arc procedures.

H. Cleaning (pickling) and passivation:
  1. Following shop fabrication of pipe sections, straight spools, fittings, and other piping components, clean (pickle) and passivate fabricated pieces.
  2. Clean (pickle) and passivate in accordance with ASTM A380 or A967.
    a. If degreasing is required before cleaning to remove scale or iron oxide, cleaning (pickling) treatments with citric acid are permissible.
      1) However, these treatments must be followed by inorganic cleaners such as nitric acid/hydrofluoric acid.
    b. Passivation treatments with citric acid are not allowed.
  3. Finish requirements: Remove free iron, heat tint oxides, weld scale, and other impurities, and obtain a passive finished surface.
  4. For piping less than 2 inches in diameter:
    a. Following shop fabrication of piping sections, descale, clean and seal piping section in accordance with CGA Standard G-4.1.

2.02 STAINLESS STEEL TUBING

A. Stainless steel tubing:
  1. Seamless tubing made of Type 316L stainless steel and in accordance with ASTM A269, wall thickness not less than 0.035 inch.

B. Fittings: Swage ferrule design:
  1. Components made of:
    a. Type 316 stainless steel.
  2. Double acting ferrule design, providing both a primary seal and a secondary bearing force.
  3. Flare type fittings are not acceptable.
  4. Manufacturers: One of the following or equal:
    a. Crawford Fitting Co., Swagelok.
    b. Hoke, Gyrolok.
    c. Parker, CPI.

C. Valves for use with stainless steel tubing:
  1. Ball type valves with swage ends to match tubing diameter.
  2. Constructed from:
    a. Type 316 stainless steel with TFE seats.
  3. Manufacturers: The following or equal:
    a. Crawford Fitting Co., Swagelok.

2.03 SOURCE QUALITY CONTROL

A. Visually inspect pipe for welding defects such as crevices, pits, cracks, protrusions, and oxidation deposits.

B. Provide written certification that the pipe as supplied are in accordance with ASTM A778. Supplemental testing is not required.

C. Provide written certification that the fittings as supplied are in accordance with ASTM A774.
  1. Supplementary testing is not required.

D. Thoroughly clean any equipment before use in cleaning or fabrication of stainless steel.

E. Storage: Segregate location of stainless steel piping from fabrication of any other piping materials.

F. Shipment to site:
   1. Protect all flanges and pipe ends by encapsulating in dense foam.
   2. Securely strap all elements to pallets with nylon straps. Use of metallic straps is prohibited.
   3. Cap ends of tube, piping, pipe spools, fittings, and valves with non-metallic plugs.
   4. Load pallets so no tube, piping, pipe spools, fittings, or valves bear the weight of pallets above.
   5. Notify Engineer when deliveries arrive so Engineer may inspect the shipping conditions.
   6. Engineer may reject material due to improper shipping methods or damage during shipment.

PART 3 EXECUTION

3.01 INSTALLATION

A. Install piping in such a manner as not to impart strain to connected equipment.

B. Slope horizontal lines so that they can be drained completely.

C. Provide valve drains at low points in piping systems.

D. Install eccentric reducers where necessary to facilitate draining of piping system.

E. Provide access for inspection and flushing of piping systems to remove sediment, deposits, and debris.

3.02 FIELD ASSEMBLY OF SHOP-FABRICATED PIPING SECTIONS

A. Join shop-fabricated piping sections together using backing flanges, flexible couplings, flanged coupling adapters, grooved couplings, or flanges.

3.03 FIELD QUALITY CONTROL

A. Test piping to pressure and by method as specified in Section 15052 - Common Work Results for General Piping.
   1. If pressure testing is accomplished with water:
      a. Use only potable quality water.
      b. Piping: Thoroughly drained and dried or place immediately into service.

B. Visually inspect pipe for welding defects such as crevices, pits, cracks, protrusions, and oxidation deposits.

3.04 PROTECTION

A. Preserve appearance and finish of stainless steel piping by providing suitable protection during handling and installation and until final acceptance of the Work.
    1. Use handling methods and equipment to prevent damage to the coating, include the use of wide canvas slings and wide padded skids.
    2. Do not use bare cables, chains, hooks, metal bars, or narrow skids.
    3. Store stainless steel piping and fittings away from any other piping or metals. Storage in contact with ground or outside without projection from bad weather is prohibited.
    4. Protect stainless steel piping and fittings from carbon steel projections (when grinding carbon steel assemblies in proximity) and carbon steel contamination (do not contact stainless steel with carbon steel wire brush or other carbon steel tool).

END OF SECTION

SECTION 15293

DOUBLE CONTAINMENT PIPING

PART 1 GENERAL

1.01 SUMMARY

A. Section includes: Double contained piping systems and accessories.

1.02 REFERENCES

A. ASTM International (ASTM):
   1. D 2564 - Specification for Solvent Cements for Poly (Vinyl Chloride) (PVC) Plastic Piping Systems.
   2. D 2855 - Practice for Making Solvent - Cemented Joints with Poly (Vinyl Chloride) (PVC) Pipe and Fittings.
   3. D 2996 - Standard Specification for Filament-Wound Fiberglass (glass-fiber-reinforced thermosetting-resin) Pipe.

1.03 SUBMITTALS

A. Product data.

B. Manufacturer’s published installation instructions.

C. Submit information on expansion joints.

PART 2 PRODUCTS

2.01 DOUBLE CONTAINMENT PLASTIC PIPING SYSTEM

A. Materials:
   1. Compatible for continuous exposure to chemical service as indicated in the pipe schedule at ambient temperatures and maximum pressure equal to the test pressure.
   2. Prefabricated fittings:
      a. Prefabricated fittings consisting of an inner (carrier) pipe elbow totally enclosed and spaced in an outer (containment) pipe elbow.
      b. Split fittings requiring field cutting, welding or joining shall not be used.
   3. Inner (carrier) pipe: Shall consist of Schedule 80 PVC pipe, joined to fittings and each other solvent welding. Provide pipe as specified in Section 15249 - Polyvinyl Chloride (PVC) Pipe: Schedule Type.
   4. Outer (containment) pipe: Shall consist of Schedule 40 PVC pipe. Provide pipe as specified in Section 15249 - Polyvinyl Chloride (PVC) Pipe: Schedule Type.
   5. Spacers:
      a. Provide nonmetallic spacers on inner pipe to control sagging within containment pipe.

    b. Design and place spacers to withstand loads of the filled pipe and loads due to thermal expansion. Spacers shall be free of sharp edges and be bonded to the carrier pipe.

B. Design requirements:
    1. Expansion loops: Provide expansion loops as required to compensate for expected thermal expansion for an ambient temperature range of 50 to 80 degrees Fahrenheit.
    2. Access ports:
        a. Provide access ports for ease of installation, start-up, and maintenance of piping. Access ports shall consist of a tee fitting in the secondary containment piping, a 6-inch diameter riser pipe, and a bolted blind flange cover.
        b. Locate access ports at each low point.
    3. Leak detection: Provide leak detection tee at each low point as indicated on the Drawings.

C. Manufacturers: One of the following or equal:
    1. Guardian Systems, a product of IPEX Inc.
    2. Harrington Industrial Plastics.
    3. PermAlert.

PART 3 EXECUTION

3.01 INSTALLATION

A. Plastic piping systems:
    1. Secondary containment joints solvent cemented using heavy body-slow set PVC cement ASTM D 2564 made in accordance with ASTM D 2855.
    2. Install piping in accordance with manufacturers published instructions.
    3. Pipe shall be continuously sloped to drain to a low point. Provide tee with minimum 3-inch riser pipe to grade for inspection and access at all low points for buried double containment pipe. Provide threaded cap at top of riser pipe installed in a valve box.
    4. Provide tee with minimum 2-inch drainpipe with ball valve at all piping low points for exposed double containment piping.
    5. Ends of outer containment pipe shall be closed.

3.02 FIELD QUALITY CONTROL

A. Plastic piping systems:
    1. Test Schedule 80 PVC (inner containment) pipe per testing methods specified in Section 15956 - Piping Systems Testing.
    2. Test Schedule 40 PVC (outer containment) pipe as follows:
        a. Pneumatically test the pipe at a minimum of 5 pounds per square inch and a maximum of 10 pounds per square inch air pressure for 2-1/2 hours.
        b. Soap all external joints and visually inspect for leaks. All leaks shall be repaired in accordance with manufacturer’s recommendations.
        c. Purge containment pipe annular space with nitrogen to remove moisture containing air following leak test.

END OF SECTION

SECTION 15294

RUBBER HOSE

PART 1 GENERAL

1.01 SUMMARY

A. Section includes: Hose.

1.02 SUBMITTALS

A. Product data: Manufacturer's data indicating service type, sizes, materials, and required accessories.

PART 2 PRODUCTS

2.01 HOSE

A. Hose material: Neoprene or acceptable oil resistant material suitable for a working pressure of minimum 70 pounds per square inch gauge.

B. Size as indicated on the Drawings fit ends with appropriate combination clamped nipples and threaded ends as indicated on the Drawings.

C. Hose 1/2 inch through 1-1/2-inch nominal diameter: General purpose hose. Provide one 50-foot-long hose for each utility station (hose bib and hose rack) provided.
   1. Manufacturers: One of the following or equal:
      a. Goodyear Rubber Products Corp.
      b. Uniroyal.
      c. Goodall Rubber Company.

D. Equip and fit hose ends with appropriate combination clamped nipples and threaded ends to make up the assembly indicated on the Drawings.

PART 3 EXECUTION

3.01 INSTALLATION

A. Install hose in accordance with manufacturer's published instructions.

END OF SECTION

SECTION 15430

EMERGENCY EYE/FACE WASH AND SHOWER EQUIPMENT

PART 1 GENERAL

1.01 SUMMARY

A. Section includes: Emergency shower and eyewash.

1.02 REFERENCES

A. American National Standards Institute (ANSI):
   1. Z358.1 - Emergency Eyewash and Shower Equipment.

B. American Society of Mechanical Engineers (ASME).

C. National Electrical Manufacturers Association (NEMA):
   1. 250 - Enclosures for Electrical Equipment (1000 V Maximum).

D. National Fire Protection Association (NFPA).

E. Occupational Safety and Health Administration (OSHA).

F. Underwriters Laboratories, Inc. (UL).

1.03 DEFINITIONS

A. NEMA:
   1. Type 4 enclosure in accordance with NEMA 250.

1.04 SUBMITTALS

A. Submit as specified in Section 01330 - Submittal Procedures.

B. Product data: As specified in Section 15050 - Common Work Results for General Piping.

C. Shop drawings: As specified in Section 15050 - Common Work Results for General Piping.

D. Provide warranty as specified in Section 01783 - Warranties and Bonds.

1.05 QUALITY ASSURANCE

A. Regulatory requirements:
   1. As applicable, equipment of this Section shall comply with requirements of local, state and Federal agencies.

1.06 DELIVERY, STORAGE, AND HANDLING

- A. Packing and shipping: Deliver to the job site in manufacturer's original containers.

- B. Delivery: After wet operations in building are completed.

- C. Storage and protection:
  - 1. Store materials in original, unopened containers in compliance with manufacturer's printed instructions.
  - 2. Keep materials dry until ready for use.
  - 3. Keep packages of material off the ground, under cover, and away from sweating walls and other damp surfaces.
  - 4. Protect finished surfaces from soiling and damage during handling and installation. Keep covered with a protective covering.

PART 2 PRODUCTS

2.01 EMERGENCY SHOWERS AND EYE/FACE WASHES

- A. General design requirements:
  - 1. Combination unit emergency shower with eye/face wash:
    - a. Floor mounted fixture consisting of pipe standard, showerhead assembly, and eyewash assembly.
    - b. Provide stanchion and floor flange, with interconnecting piping.
  - 2. Showerhead flow: 20.0 gallons per minute flow, minimum.
  - 3. Eye/face wash flow: 3.0 gallons per minute flow, minimum.
  - 4. Meet or exceed all requirements of ANSI Z358.1.
  - 5. Provide ANSI compliant identification sign and markings.

- B. Shower/eyewash unit with integral controls to alarm the system is in use.
  - 1. Flow switch:
    - a. Construction:
      - 1) NEMA Type 4.
      - 2) Brass or Type 316 Stainless Steel.
    - b. Type: Magnetic proximity switch.
    - c. Alarm Contacts: Double pole, double throw contacts rated at 2.0 amps at 120VAC configurable for either Normally Open or Normally Closed.
  - 2. Control panel:
    - a. Construction:
      - 1) NEMA Type 4.
      - 2) Cast aluminum or steel Box with 3 conduit hubs.
      - 3) Stainless steel cover plate.
    - b. Silence/On-Off switch:
      - 1) NEMA Type 4.
      - 2) Maintain position, black, with nameplate.
      - 3) 1 set of auxiliary contacts.
    - c. Power: 0.6 Amps at 120VAC.
  - 3. Strobe:
    - a. Construction:
      - 1) NEMA Type 4.
      - 2) 120VAC, AMBER Flashing LED.

4. Horn:
    a. Construction:
    b. NEMA Type 4.
    c. 90dB at 10 feet audible alarm.

C. PVC combination unit emergency shower and eye/face wash:
  1. Manufacturers: One of the following or equal:
      a. HAWS, Model No. 8336.
      b. Guardian Equipment, Model No. G1990.
      c. Bradley, Model No. S19-310PVC.
  2. Pipe standard: 2 inch Schedule 80 PVC pipe and fittings, with stainless steel rod providing additional support overhead; 2-1/2 inch diameter floor flange.
  3. Shower head:
      a. Material and size: ABS plastic, 10-inch diameter with 20 gallons per minute flow control.
      b. Valve and actuator: Type 316 stainless steel stay open steel ball valve actuated by rigid stainless steel pull rod.
  4. Eye/face wash:
      a. Valve and actuator: Stay open Type 316 stainless steel ball valve with stainless steel ball operated by stainless steel push handle.
      b. Head(s): ABS plastic or polypropylene soft-flow eye/face wash type heads, with integral flip top protective dust covers releasing with water pressure.
      c. Receptor bowl: ABS plastic.

D. Freeze resistant combination unit emergency shower and eye/face wash:
  1. Manufacturers: One of the following or equal:
      a. HAWS, Model No. 8317CTFP.
      b. Guardian Equipment, Model No. GFR3100.
      c. Bradley, Model No. S19-300T.
  2. Pipe standard:
      a. 1-1/4 inch galvanized steel pipe and fittings, wrapped with self-regulating heat cable.
      b. Encase piping and fittings in UV resistant ABS plastic jacket with internal foam insulation; 5 inch diameter floor flange.
  3. Shower head:
      a. Material and size: ABS plastic, 10-inch diameter with 20 gallons per minute flow control.
      b. Valve and actuator: Chrome plated brass stay open steel ball valve actuated by rigid stainless steel pull rod.
  4. Eye/face wash:
      a. Valve and actuator: Stay open chrome plated brass ball valve with stainless steel ball and stem operated by a stainless steel or epoxy coated aluminum push handle.
      b. Heads: Twin ABS plastic or polypropylene soft-flow eye/face wash type heads, with integral flip top protective dust covers releasing with water pressure.

E. Safety shower tester:
  1. Manufacturers: One of the following or equal:
      a. Haws, Model No. 9010 with No. 9009.
      b. Guardian Equipment, Model No. AP250-005.

    - c. Bradley, Model No. S19-330ST.
  2. Kit includes:
    - a. Minimum 5 gallon plastic bucket.
    - b. 7 foot long watertight 12-gallon translucent vinyl plastic bag for attaching over drench showerhead.
      - 1) Bag shall have drawstring at top and be hemmed at bottom.
    - c. Testing record card.

PART 3 EXECUTION

3.01 INSTALLATION

A. Install products in accordance with manufacturers' recommendations.

B. Install products in accordance with code requirements and ANSI Z358.1.

C. Plumbing and mechanical work as specified in Section 15050 - Common Work Results for General Piping.

D. Electrical connections and distribution as specified in Section 16050 - Common Work Results for Electrical.

3.01 COMMISSIONING

A. As specified in Section 01756 - Commissioning and this Section.

B. Functional testing:
  1. Shower/eyewash unit with integral controls:
    - a. Test witnessing: Witnessed.
    - b. Electrical Instrumentation and Controls:
      - 1) Test witnessing: Witnessed.
      - 2) Conduct testing as specified in Section 17950 - Testing, Calibration, and Commissioning.

END OF SECTION

SECTION 15956

PIPING SYSTEMS TESTING

PART 1 GENERAL

1.01 SUMMARY

A. Section includes: Test requirements for piping systems.

1.02 REFERENCES

A. National Fuel Gas Code (NFGC).

B. American Society of Mechanical Engineers (ASME):
   1. B31.1 - Power Piping.
   2. B31.3 - Process Piping.
   3. B31.8 - Gas Transmission and Distribution Piping Systems.

C. Underwriters Laboratories Inc. (UL).

D. Utilities Standard and Specification Manual (USSM) - Polk County.

1.03 TESTING REQUIREMENTS

A. General requirements:
   1. Testing requirements are stipulated in Laws and Regulations; are included in the Piping Schedule in Section 15052 - Common Work Results for General Piping; are specified in the specifications covering the various types of piping; and are specified in this Section.
   2. Requirements in Laws and Regulations supersede other requirements of Contract Documents, except where requirements of Contract Documents are more stringent, including higher test pressures, longer test times, and lower leakage allowances.
   3. Test plumbing piping in accordance with Laws and Regulations, the plumbing code and UL requirements.
   4. Test natural gas or digester gas piping:
      a. For less than 125 pounds per square inch gauge working pressure, test in accordance with mechanical code or the National Fuel Gas Code, whichever is more stringent.
      b. For 125 pounds per square inch gauge or greater working pressure, test per ASME B31.3 or ASME B31.8, whichever is more stringent.
   5. When testing with water, the specified test pressure is considered to be the pressure at the lowest point of the piping section under test.
      a. Lower test pressure as necessary (based on elevation) if testing is performed at higher point of the pipe section.

B. Furnish necessary personnel, materials, and equipment, including bulkheads, restraints, anchors, temporary connections, pumps, water, pressure gauges, and other means and facilities required to perform tests.

C. Water for testing, cleaning, and disinfecting:
   1. Water for testing, cleaning, and disinfecting will be provided as specified in Sections 15050 - Common Work Results for General Piping and 01757 - Disinfection.

D. Pipes to be tested: Test only those portions of pipes that have been installed as part of this Contract. Test new pipe sections prior to making final connections to existing piping. Furnish and install test plugs, bulkheads, and restraints required to isolate new pipe sections. Do not use existing valves as test plug or bulkhead.

E. Unsuccessful tests:
   1. Where tests are not successful, correct defects or remove defective piping and appurtenances and install piping and appurtenances that comply with the specified requirements.
   2. Repeat testing until tests are successful at no additional cost to the Owner

F. Test completion: Drain and leave piping clean after successful testing.

G. Test water disposal: Dispose of testing water at in the stormwater system in accordance with requirements of federal, state, county, and city regulations governing disposal of wastes in the location of the Project and disposal site.

1.04 SUBMITTALS

A. Submit as specified in Section 01330 - Submittal Procedures.

B. Schedule and notification of tests:
   1. Submit a list of scheduled piping tests by noon of the working day preceding the date of the scheduled tests.
   2. Notification of readiness to test: Immediately before testing, notify Engineer in writing of readiness, not just intention, to test piping.
   3. Have personnel, materials, and equipment specified in place before submitting notification of readiness.

1.05 SEQUENCE

A. Clean piping before pressure or leak tests.

B. Test gravity piping underground, including sanitary sewers, for visible leaks before backfilling and compacting.

C. Underground pressure piping may be tested before or after backfilling when not indicated or specified otherwise.

D. Backfill and compact trench, or provide blocking that prevents pipe movement before testing underground piping with a maximum leakage allowance.

E. Test underground piping before encasing piping in concrete or covering piping with slab, structure, or permanent improvement.

PART 2 PRODUCTS

Not Used.

PART 3 EXECUTION

3.01 TESTING ALIGNMENT, GRADE, AND DEFLECTION

A. Alignment and grade:
   1. Visually inspect the interior of gravity piping with artificial light, reflected light, or laser beam.
   2. Consider inspection complete when no broken or collapsed piping, no open or poorly made joints, no grade changes that affect the piping capacity, or no other defects are observed.

B. Deflection test:
   1. Pull a mandrel through the clean piping section under test.
   2. Perform the test not sooner than 30 days after installation and not later than 60 days after installation.
   3. Use a 9-rod mandrel with a contact length of not less than the nominal diameter of the pipe within 1 percent plus or minus.
   4. Consider test complete when the mandrel can be pulled through the piping with reasonable effort by 1 person, without the aid of mechanical equipment.

3.02 AIR TESTING METHOD FOR PRESSURE PIPING

A. Air test piping, indicated with "AM" in the Piping Schedule, with air or another nonflammable or inert gas.

B. Test gas, air, liquefied petroleum gas, liquid chlorine, and chlorine gas piping by the air test method:
   1. Test chlorine piping with dry air or nitrogen having a dew point of minus 40 degrees Fahrenheit or less. Supply temporary air dryers as necessary.

C. Test at pressure as specified in Piping Schedule in Section 15052 - Common Work Results for General Piping:
   1. Provide temporary pressure relief valve for piping under test:
      a. Set at the lesser of 110 percent of the test pressure or 50 pounds per square inch gauge over the test pressure.
   2. Air method test pressures shall not exceed 110 percent of the piping maximum allowable working pressure calculated in accordance with the most stringent of ASME B31.1, ASME B31.3, ASE B31.8, or the pipe manufacturer's stated maximum working pressure.
   3. Gradually increase test pressure to an initial test pressure equal to the lesser of 1/2 the test pressure or 25 pounds per square inch gauge.
   4. Perform initial check of joints and fittings for leakage.
   5. Gradually increase test pressure in steps no larger than the initial pressure. Check for leakage at each step increase until test pressure reached.
   6. At each step in the pressure, examine and test piping being air tested for leaks with soap solution.
   7. Consider examination complete when piping section under test holds the test pressure for 15 minutes without losses.

3.03 TESTING GRAVITY FLOW PIPING

A. Test gravity flow piping indicated with "GR" in the Piping Schedule, as follows:
  1. Unless specified otherwise, subject gravity flow piping to the following tests:
    a. Alignment and grade.
    b. For plastic piping test for deflection.
    c. Visible leaks and pressure with maximum leakage allowance, except for storm drains and culverts.
  2. Inspect piping for visible leaks before backfilling.
  3. Provide temporary restraints when needed to prevent movement of piping.
  4. Pressure test piping with maximum leakage allowance after backfilling.
  5. With the lower end plugged, fill piping slowly with water while allowing air to escape from high points. Keep piping full under a slight head for the water at least 24 hours:
    a. Examine piping for visible leaks. Consider examination complete when no visible leaks are observed.
    b. Maintain piping with water, or allow a new water absorption period of 24 hours for the performance of the pressure test with maximum leakage allowance.
    c. After successful completion of the test for visible leaks and after the piping has been restrained and backfilled, subject piping to the test pressure for minimum of 4 hours while accurately measuring the volume of water added to maintain the test pressure:
      1) For polyvinyl chloride (PVC) gravity sewer pipe: 25 gallons per day per inch diameter per mile of piping under test:
        a) Consider the test complete when leakage is equal to or less than the following maximum leakage allowances:
          (1) For concrete piping with rubber gasket joints: 80 gallons per day per inch of diameter per mile of piping under test:
            (a) Advise manufacturer of concrete piping with rubber gasket joints of more stringent than normal maximum leakage allowance.
          (2) For vitrified claypiping: 500 gallons per day per inch of diameter per mile of piping under test.
          (3) For other piping: 80 gallons per day per inch diameter per mile of piping under test.

3.04 TESTING HIGH-HEAD PRESSURE PIPING

A. Test piping for which the specified test pressure in the Piping Schedule is 20 pounds per square inch gauge or greater, by the high head pressure test method, indicated "HH" in the Piping Schedule.

B. General:
  1. Test connections, hydrants, valves, blowoffs, and closure pieces with the piping.
  2. Do not use installed valves for shutoff when the specified test pressure exceeds the valve's maximum allowable seat differential pressure. Provide blinds or other means to isolate test sections.
  3. Do not include valves, equipment, or piping specialties in test sections if test pressure exceeds the valve, equipment, or piping specialty safe test pressure allowed by the item's manufacturer.

4. During the performance of the tests, test pressure shall not vary more than plus or minus 5 pounds per square inch gauge with respect to the specified test pressure.
5. Select the limits of testing to sections of piping. Select sections that have the same piping material and test pressure.
6. When test results indicate failure of selected sections, limit tests to piping:
    a. Between valves.
    b. Between a valve and the end of the piping.
    c. Less than 500 feet long.
7. Test piping for minimum 2 hours for visible leaks test and minimum 2 hours for the pressure test with maximum leakage allowance.

C. Testing procedures:
    1. Fill piping section under test slowly with water while venting air:
        a. Use potable water for all potable waterlines and where noted on the Piping Schedule.
    2. Before pressurizing for the tests, retain water in piping under slight pressure for a water absorption period of minimum 24 hours.
    3. Raise pressure to the specified test pressure and inspect piping visually for leaks:
        a. Consider visible leakage testing complete when no visible leaks are observed.

D. Pressure test with maximum leakage allowance:
    1. Leakage allowance is zero for piping systems using flanged, National Pipe Thread threaded and welded joints.
    2. Pressure test piping after completion of visible leaks test.
    3. For piping systems using joint designs other than flanged, threaded, or welded joints, accurately measure the makeup water necessary to maintain the pressure in the piping section under test during the pressure test period:
        a. Consider the pressure test to be complete when makeup water added is less than the allowable leakage and no damage to piping and appurtenances has occurred.
        b. Successful completion of the pressure test with maximum leakage allowance shall have been achieved when the observed leakage during the test period is equal or less than the allowable leakage and no damage to piping and appurtenances has occurred.

c. When leakage is allowed, calculate the allowable leakage by the following formula:

$L = S \text{ x } D \text{ x } P^{1/2} \text{ x } 133{,}200^{-1}$

wherein the terms shall mean:

L = Allowable leakage in gallons per hour.

S = Length of the test section in feet.

D = Nominal diameter of the piping in inches.

P = Average observed test pressure in pounds per square inches gauge, at the lowest point of the test section, corrected for elevation of the pressure gauge.

x = The multiplication symbol.

3.05 TESTING LOW-HEAD PRESSURE PIPING

A. Test piping for which the specified test pressure is less than 20 pounds per square inch gauge, by the low head pressure test method, indicated "LH" in the Piping Schedule.

B. General:
1. Test pressures shall be as scheduled in Section 15052 - Common Work Results for General Piping.
2. During the performance of the tests, test pressure shall not vary more than plus or minus 2 pounds per square inch gauge with respect to the specified test pressure.
3. Test connections, blowoffs, vents, closure pieces, and joints into structures, including existing bell rings and other appurtenances, with the piping.
4. Test piping for minimum 2 hours for visible leaks test and minimum 2 hours for the pressure test with maximum leakage allowance.

C. Visible leaks test:
1. Subject piping under test to the specified pressure measured at the lowest end.
2. Fill piping section under test slowly with water while venting air:
    a. Use potable water for all potable waterlines and where noted on the Piping Schedule.
3. Before pressurizing for the tests, retain water in piping under slight pressure for the water absorption period of minimum 24 hours.
4. Raise pressure to the specified test pressure and inspect piping visually for leaks. Consider testing complete when no visible leaks are observed.

D. Pressure test with maximum leakage allowance:
1. Pressure test piping after completion of visible leaks test.

2. Accurately measure the makeup water necessary to maintain the pressure in the piping section under test during the pressure test period:
    a. Consider the pressure test to be complete when makeup water added is less than the allowable leakage of 80 gallons per inch of nominal diameter, per mile of piping section under test after 24 hours, and no damage to piping and appurtenances has occurred.
    b. Successful completion of the leakage test shall have been achieved when the observed leakage is equal or less than the allowable leakage and no damage to piping and appurtenances has occurred.

E. Optional joint test:
1. When joint testing is allowed by note in the Piping Schedule, the procedure shall be as follows:
    a. Joint testing will be allowed only for low head pressure piping.
    b. Joint testing does not replace and is not in lieu of any testing of the piping system or trust restraints.
2. Joint testing may be performed with water or air.
3. Joint test piping after completion of backfill and compaction to the top of the trench.
4. Joint testing with water:
    a. Measure test pressure at the invert of the pipe. Apply pressure of 4 feet plus the inside diameter of the pipe in water column within 0.20 feet in water column.
    b. Maintain test pressure for 1 minute.
    c. Base the allowable leakage per joint on 80 gallons per inch nominal diameter, per mile of piping, per 24 hours equally distributed to the actual number of joints per mile for the type of piping.
    d. Consider the pressure test to be complete when makeup water added is less than the allowable leakage.
    e. Successful completion of the joint test with water shall have been achieved when the observed leakage is equal or less than the allowable leakage.
5. Joint testing with air:
    a. Apply test pressure of 3 pounds per square inch gauge with a maximum variation of plus 0.20 and minus 0.00 pounds per square inch.
    b. Maintain test pressure for 2 minutes.
    c. Consider the pressure test to be complete when the test pressure does not drop below 2.7 pounds per square inch for the duration of the test.

END OF SECTION

SECTION 15958

MECHANICAL EQUIPMENT TESTING

PART 1 GENERAL

1.01 SUMMARY

A. Section includes: Testing of mechanical equipment and systems.

1.02 REFERENCES

A. American National Standards Institute (ANSI):
   1. S1.4 Specification for Sound Level Meters.

B. Hydraulic Institute (HI).

C. National Institute of Standards and Technology (NIST).

1.03 SUBMITTALS

A. Schedule of source (factory) tests, Owner training, installation testing, functional testing, clean water facility testing, closeout documentation, process start-up and process operational period as specified in this Section and in Section 01756 - Commissioning and equipment sections.

B. Test instrumentation calibration data:

C. Operation and maintenance manual:
   1. Include motor rotor bar pass frequencies for motors larger than 500 horsepower.

D. Commissioning and Process Start-up Plan: As specified in Section 01756 - Commissioning.

E. Test plan as specified in Section 01756 - Commissioning and equipment sections.

F. Test reports as specified in this Section and in Section 01756 - Commissioning and equipment sections.

PART 2 PRODUCTS

Not Used.

PART 3 EXECUTION

3.01 GENERAL

A. Commissioning and process start-up of equipment as specified in:
   1. This Section.
   2. Section 01756 - Commissioning.
   3. Equipment sections.
      a. If testing requirements are not specified, provide Level 1 Tests.

B. Comply with latest version of applicable standards.

C. Test and prepare piping as specified in Sections 01757 - Disinfection, 02318 – Trenching, and 15956 - Piping Systems Testing.

D. Provide necessary test instrumentation that has been calibrated within 1 year from date of test to recognized test standards traceable to the NIST or approved source.
   1. Properly calibrated field instrumentation permanently installed as a part of the Work may be utilized for tests.
   2. Prior to testing, provide signed and dated certificates of calibration for test instrumentation and equipment.

E. Test measurement and result accuracy:
   1. Use test instruments with accuracies as recommended in the appropriate referenced standards. When no accuracy is recommended in the referenced standard, use 1 percent or better accuracy test instruments.
      a. Improved (lower error tolerance) accuracies specified elsewhere prevail over this general requirement.
   2. Do not adjust results of tests for instrumentation accuracy.
      a. Measured values and values directly calculated from measured values shall be the basis for comparing actual equipment performance to specified requirements.

F. Report features:
   1. Report results in a bound document in generally accepted engineering format with title page, written summary of results compared to specified requirements, and appropriate curves or plots of significant variables in English units.
   2. Include appendix with a copy of raw, unmodified test data sheets indicating test value, date and time of reading, and initials of person taking the data.
   3. Include appendix with sample calculations for adjustments to raw test data and for calculated results.
   4. Include appendix with the make, model, and last calibration date of instrumentation used for test measurements.
   5. Include in body of report a drawing or sketch of the test system layout showing location and orientation of the test instruments relative to the tested equipment features.

G. Provide necessary fluids, utilities, temporary piping, temporary supports, temporary access platforms or access means and other temporary facilities and labor necessary to safely operate the equipment and accomplish the specified testing.
   1. With Owner's permission, some utilities may be provided by fully tested permanently installed utilities that are part of the Work.

H. Prepare and submit test reports as specified.

I. Testing levels:
  1. Level 1 Tests:
    a. Level 1 General Equipment Performance Test:
      1) For equipment, operate, rotate, or otherwise functionally test for 15 minutes minimum after components reach normal operating temperatures.
      2) Operate at rated design load conditions.
      3) Confirm that equipment is properly assembled, equipment moves or rotates in the proper direction, shafting, drive elements, and bearings are installed and lubricated in accordance with proper tolerances, and that no unusual power consumption, lubrication temperatures, bearing temperatures, or other conditions are observed.
    b. Level 1 Pump Performance Test:
      1) Measure flow and head while operating at or near the rated condition; for factory testing, testing may be at reduced speeds with flow and head corresponding to the rated condition when adjusted for speed using the appropriate affinity laws.
      2) Use of a test driver is permitted for factory tests when actual driver is given a separate test at its point of manufacture as specified in Section 16222 - Low Voltage Motors up to 500 Horsepower or the applicable equipment section. Use actual driver for field tests.
      3) Record measured flow, suction pressure, discharge pressure, and make observations on bearing temperatures and noise levels.
    c. Level 1 Vibration Test:
      1) Test requirement:
        a) Measure filtered vibration spectra versus frequency in 3 perpendicular planes at each normally accessible bearing housing on the driven equipment, any gears and on the driver; 1 plane of measurement to be parallel to the axis of rotation of the component.
        b) Vibration spectra versus frequency shall be in accordance with Vibration Acceptance Criteria.
      2) Equipment operating condition: Test at specified maximum speed.
    d. Level 1 Noise Test:
      1) Measure unfiltered overall A-weighted sound pressure level in dBA at 3 feet horizontally from the surface of the equipment and at a mid-point of the equipment height.
  2. Level 2 Tests:
    a. Level 2 General Performance Test:
      1) For equipment, operate, rotate, or otherwise functionally test for at least 2 hours after components reach normal operating temperatures.
      2) Operate at rated design load conditions.
      3) Confirm that equipment is properly assembled, equipment moves or rotates in the proper direction, shafting, drive elements, and bearings are installed and lubricated in accordance with proper tolerances, and that no unusual power consumption, lubrication temperatures, bearing temperatures, or other conditions are observed.

    b. Level 2 Pump Performance Test:
        1) Test 2 hours minimum for flow and head at the rated condition; for factory testing, testing may be at a reduced speeds with flow and head corresponding to the rated condition when adjusted for speed using the appropriate affinity laws.
        2) Use of a test driver is permitted for factory tests when actual driver is given a separate test at its point of manufacture as specified in Section 16222 - Low Voltage Motors up to 500 Horsepower. Use actual driver for field tests.
        3) Test for flow and head at 2 additional conditions; 1 at 25 percent below the rated flow and 1 at 10 percent above the rated flow.
        4) Record measured flow, suction pressure, discharge pressure, and observations on bearing temperatures and noise levels at each condition.
    c. Level 2 Vibration Test:
        1) Test requirement:
            a) Measure filtered vibration spectra versus frequency and measure vibration phase in 3 perpendicular planes at each normally accessible bearing housing on the driven equipment, any gears and on the driver; 1 plane of measurement to be parallel to the axis of rotation of the component; measure actual rotational speeds for each vibration spectra measured using photometric or other tachometer input connected directly to the vibration data collector.
            b) Vibration spectra versus frequency shall be in accordance with Vibration Acceptance Criteria.
        2) Equipment operating condition: Repeat test requirements at design specified maximum speed and at minimum speed for variable speed equipment.
        3) Natural frequency test of field installed equipment:
            a) Excite the installed equipment and support system in 3 perpendicular planes, use same planes as operating vibration measurement planes, and determine the as-installed natural resonant frequency of the driven equipment, the driver, gears, and supports.
            b) Perform test at each bearing housing, at each support pedestal, and for pumps on the suction and discharge piping.
            c) Perform with equipment and attached piping full of intended service or process fluid.
    d. Level 2 Noise Test:
        1) Measure filtered A-weighted overall sound pressure level in dBA for each of 8 octave band mid-points beginning at 63 hertz measured at 3 feet horizontally from the surface of the equipment at mid-point height of the noise source.
3. Level 3 Tests:
    a. Level 3 General Equipment Performance Tests:
        1) For equipment, operate, rotate, or otherwise functionally test for at least 4 hours after components reach normal operating temperatures.
        2) Operate at rated design load conditions for 1/2 the specified time; operate at each of any other specified conditions for a proportionate share of the remaining test time.

   3) Confirm that equipment is properly assembled, equipment rotates in the proper direction, shafting and bearings are installed and lubricated in accordance with proper tolerances, and that no unusual noise, vibration or temperatures are observed.
   4) Take appropriate capacity, power or fuel consumption, torque, revolutions per minute, pressure, and temperature readings using appropriate test instrumentation to confirm equipment meets specified performance requirements at the design rated condition.
   5) Bearing temperatures: During maximum speed or capacity performance testing, measure and record the exterior surface temperature of each bearing versus time.

b. Level 3 Pump Performance Test:
   1) Test 4 hours minimum for flow and head at or near the rated condition; for factory testing, testing may be at a reduced speeds with flow and head corresponding to the rated condition when adjusted for speed using the appropriate affinity laws.
   2) Use of a test driver is permitted for factory tests when actual driver is given a separate test at its point of manufacture as specified in Section 16222 - Low Voltage Motors up to 500 Horsepower. Use actual driver for field tests.
   3) Test each specified flow and head condition at the rated speed and test at minimum as well as maximum specified speeds; operate at each test condition for a minimum of 15 minutes; for factory testing, test at other speeds may be omitted if test driver at reduced speeds is used for rated condition testing.
   4) Record measured shaft revolutions per minute, flow, suction pressure, discharge pressure; record measured bearing temperatures (bearing housing exterior surface temperatures may be recorded when bearing temperature devices are not required by the equipment section) and record observations on noise levels.

c. Level 3 Vibration Test:
   1) Requirements: Same as Level 2 vibration test except data taken at each operating condition tested and with additional requirements below.
   2) Perform High Frequency Enveloping Analysis for gears and bearings.
      a) Measure bearing element vibration directly on each bearing cap in a location close as possible to the bearing load zone that provides a smooth surface and direct path to the bearing to detect bearing defects.
      b) Report results in units of acceleration versus frequency in cycles per minute.
   3) Perform Time Wave Form analysis for gears, low speed equipment and reciprocating equipment; plot true peak amplitude velocity and displacement versus time and label the period between peaks with the likely cause of the periodic peaks (relate the period to a cause).
   4) Plot vibration spectra on 3 different plots; peak displacement versus frequency, peak acceleration versus frequency and peak velocity versus frequency.

    d. Level 3 Noise Test: Measure filtered, un-weighted overall sound pressure level in dB at 3 feet horizontally from the surface of the equipment at mid-point height and at 4 locations approximately 90 degrees apart in plain view; report results for each of 8 octave band mid-points beginning at 63 hertz.

4. Level 4 Tests:
    a. Level 4 General Equipment Performance Test:
        1) For equipment, operate, rotate, or otherwise functionally test for at least 8 hours after components reach normal operating temperatures.
        2) Operate at rated design load conditions for 1/2 the specified time; operate at each of any other specified conditions for a proportionate share of the remaining test time.
        3) Confirm that equipment is properly assembled, equipment rotates in the proper direction, shafting and bearings are installed and lubricated in accordance with proper tolerances, and that no unusual noise, vibration, or temperatures are observed.
        4) Take appropriate capacity, power or fuel consumption, torque, revolutions per minute, pressure, and temperature readings using appropriate test instrumentation to confirm equipment meets specified performance requirements at the design rated condition.
        5) Bearing temperatures: During maximum speed or capacity testing, measure and record the exterior surface temperature of each bearing versus time.
    b. Level 4 Pump Performance Test:
        1) Test 8 hours minimum for flow and head; begin tests at or near the rated condition; for factory and field-testing, test with furnished motor at full speed.
        2) Test each specified flow and head condition at the rated speed and test at minimum as well as maximum specified speeds; operate at each test condition for a minimum of 20 minutes or longer as necessary to measure required performance, vibration and noise data at each test condition.
        3) Record measured shaft revolutions per minute, flow, suction pressure, discharge pressure; record measured bearing temperatures (bearing housing exterior surface temperatures may be recorded when bearing temperature devices not required by the equipment section) and record observations on noise levels.
        4) Bearing temperatures: During maximum speed or capacity testing, measure and record the exterior surface temperature of each bearing versus time.
        5) Perform efficiency and/or Net Positive Suction Head Required (NPSHr) and/or priming time tests when specified in the equipment section in accordance with the appropriate HI standard and as follows:
            a) Perform NPSHr testing at maximum rated design speed, head and flow with test fluids at ambient conditions; at maximum rated speed, test at 15 percent above rated design flow, and 25 percent below rated design flow.
            b) Perform efficiency testing with test fluids at maximum rated speed.

            c) Perform priming time testing with test fluids at maximum rated speed.
        c. Level 4 Vibration Test: Same as Level 3 vibration test.
        d. Level 4 Noise Test: Same as Level 3 Noise Test except with data taken at each operating condition tested.

J. Variable speed equipment tests:
    1. Establish performance over the entire speed range and at the average operating condition.
    2. Establish performance curves for the following speeds:
        a. The speed corresponding to the rated maximum capacity.
        b. The speed corresponding to the minimum capacity.
        c. The speed corresponding to the average operating conditions.

K. Pump tests, all levels of testing:
    1. Test in accordance with the following:
        a. Applicable HI Standards.
        b. This Section.
        c. Equipment sections.
    2. Test tolerances: In accordance with appropriate HI Standards, except the following modified tolerances apply:
        a. From 0 to plus 5 percent of head at the specified flows
        b. From 0 to plus 5 percent of flow at the rated design point head.
        c. No negative tolerance for the efficiency at the specified flows.
        d. No positive tolerance for vibration limits. Vibration limits and test methods in HI Standards do not apply, use limits and methods specified in this or other Sections of the Specifications.

L. Drivers tests:
    1. Test motors as specified in Section 16222 - Low Voltage Motors up to 500 Horsepower.
    2. Test other drivers as specified in the equipment section.

M. Noise requirements and control:
    1. Perform noise tests in conjunction with vibration test analysis.
    2. Make measurements in relation to reference pressure of 0.0002 microbar.
    3. Make measurements of emitted noise levels on sound level meter meeting or exceeding ANSI S1.4, Type II.
    4. Set sound level meter to slow response.
    5. Unless otherwise specified, maximum free field noise level not to exceed 85 dBA measured as sound pressure level at 3 feet from the equipment.

N. Pressure testing:
    1. Hydrostatically pressure test pressure containing parts at the appropriate standard or code required level above the equipment component specified design pressure or operating pressure, whichever is higher.

O. Inspection and balancing:
    1. Statically and dynamically balance each of the individual rotating parts as required to achieve the required field vibration limits.
    2. Statically and dynamically balance the completed equipment rotating assembly and drive shaft components.

3. Furnish copies of material and component inspection reports including balancing reports for equipment system components and for the completed rotating assembly.

P. Critical speed of rotating equipment:
  1. Satisfy the following:
    a. The first lateral and torsional critical speed of all constant, variable, and 2-speed driven equipment that is considered rigid such as horizontal pumps, all non-clog pumps, blowers, air compressors, and engines shall be at least 25 percent above the equipment's maximum operating speed.
    b. The first lateral and torsional critical speed of all constant, variable, and 2-speed driven equipment that is considered flexible or flexibly mounted such as vertical pumps (vertical in-line and vertical non-clog pumps excluded) and fans shall at least 25 percent below the equipment's lowest operating speed.
    c. The second lateral and torsional critical speed of all constant, variable, and 2-speed equipment that is considered flexible or flexibly mounted shall be at least 25 percent above the maximum operating speed.

Q. Vibration tests:
  1. Definitions:
    a. Root mean square: for pumps operating at speeds greater than 600 revolutions per minute, the vibration measurement shall be measured as the overall velocity in inches per second root mean square (RMS).
    b. Peak-to-peak displacement: The root mean squared average of the peak-to-peak displacement multiplied by the square root of 2.
    c. Peak velocity: The root mean squared average of the peak velocity multiplied by the square root of 2.
    d. Peak acceleration: The root mean squared average of the peak acceleration multiplied by the square root of 2.
    e. High frequency enveloping: A process to extract very low amplitude time domain signals associated with impact or impulse events such as bearing or gear tooth defects and display them in a frequency spectrum of acceleration versus frequency.
      1) Manufacturers: One of the following or equal:
        a) Rockwell Automation, Entek Group, "Spike Energy" analysis.
        b) CSI, "PeakVue."
    f. Low speed equipment: Equipment or components of equipment rotating at less than 600 revolutions per minute.
    g. High speed equipment: Equipment and equipment components operating at or above 600 revolutions per minute.
    h. Preferred operating range: Manufacturer's defined preferred operating range (POR) for the equipment.
    i. Allowable operating range: Manufacturer's defined allowable operating range (AOR) for the equipment.

2. Vibration instrumentation requirements:
    a. Analyzers: Use digital type analyzers or data collectors with anti-aliasing filter, 12 bit A/D converter, fast fourier transform circuitry, phase measurement capability, time wave form data storage, high frequency enveloping capabilities, 35 frequency ranges from 21 to 1,500,000 cycles per minute, adjustable fast fourier transform resolution from 400 to 6,400 lines, storage for up to one hundred 3,200 line frequency spectra, data output port, circuitry for integration of acceleration data to velocity or double integration to displacement.
        1) Manufacturers: One of the following or equal:
            a) Computational Systems Inc., (CSI) Division of Emerson Process Management, Model 2120A, Data Collector/analyzer with applicable analysis software.
            b) Pruftechnik, VIBXPERT II.
    b. Analyzer settings:
        1) Units: English, inches/second, mils, and gravitational forces.
        2) Fast fourier transform lines: Most equipment 1,600 minimum; for motors, enough lines as required to distinguish motor current frequencies from rotational frequencies, use 3,200 lines for motors with a nominal speed of 3,600 revolutions per minute; 3,200 lines minimum for High Frequency Enveloping; 1,600 lines minimum for low speed equipment.
        3) Sample averages: 4 minimum.
        4) Maximum frequency (Fmax): 40 times rotational frequency for rolling element bearings, 10 times rotational frequency for sleeve bearings.
        5) Amplitude range: Auto select but full scale not more than twice the acceptance criteria or the highest peak, whichever is lower.
        6) Fast fourier transform windowing: Hanning Window.
        7) High pass filter: Minus 3 dB at 120 cycles per minute for high speed equipment. Minus 3 dB at 21 cycles per minute for low speed equipment.
    c. Accelerometers:
        1) For low speed equipment: Low frequency, shear mode accelerometer, 500 millivolts per gravitational force sensitivity, 10 gravitational force range, plus/minus 5 percent frequency response from 0.5 hertz to 850 hertz, magnetic mount.
            a) Manufacturers: One of the following or equal:
                (1) Wilcoxon Research, Model 797L.
                (2) PCB, Model 393C.
        2) For high speed equipment: General purpose accelerometer, 100 millivolts per gravitational force sensitivity, 50 gravitational force range, plus/minus 3dB frequency response range from 2 hertz to 12,000 hertz when stud mounted, with magnetic mount holder.
            a) Manufacturers: One of the following or equal:
                (1) Wilcoxon Research, Model 793.
                (2) Entek-IRD Model 943.
3. Accelerometer mounting:
    a. Use magnetic mounting or stud mounting.
    b. Mount on bearing housing in location with best available direct path to bearing and shaft vibration.
    c. Remove paint and mount transducer on flat metal surface or epoxy mount for High Frequency Enveloping measurements.

4. Vibration acceptance criteria:
   a. Testing of rotating mechanical equipment: Tests are to be performed by an experienced, factory trained, and independent authorized vibration analysis expert.
   b. Vibration displacement limits: Unless otherwise specified, equipment operating at speeds 600 revolutions per minute or less is not to exhibit unfiltered readings in excess of following:

Operating Conditions & Application Data	**Overall Peak-to-Peak Displacement**	
	Field, mils	**Factory, mils**
Operation within the POR	3.0	4.0
Operation within the AOR	4.0	5.0
Additive value when measurement location is greater than 5 feet above foundation.	2.0	2.0
Additive value for solids-handling pumps	2.0	N/A
Additive value for slurry pumps	2.0	N/A

   c. Vibration velocity limits: Unless otherwise specified, equipment operating at speeds greater than 600 revolutions per minute is not to exceed the following peak velocity limits:

		Field Test	**Factory Test**
HI Pump Type	**Horsepower**	**Overall RMS**	**Overall RMS**
Horizontal Solids Handling Centrifugal Pumps	Below 33 hp	0.25	0.28
Horizontal and Vertical In-Line Centrifugal Pumps (other than Non-Clog type)	Between 33 and 100 hp	0.28	0.31
	100 hp and above	0.31	0.34
Vertical Solids Handling Centrifugal Pumps	Below 33 hp	0.30	0.33
Vertical Turbine, Mixed Flow, and Propeller Pumps	Between 33 and 100 hp	0.32	0.35
	100 hp and above	0.34	0.35
Non-Solids Handling Centrifugal Pumps	Below 268 hp	0.15	0.19
HI Types BB1, BB2, BB3, BB4, BB5, OH1, OH2, OH3, OH4, OH5, and OH7	268 hp and above	0.19	0.22
Vertical Turbine, Mixed Flow, and Propeller Pumps HI Types VS1, VS2, VS3, VS4, VS5, VS6, VS7, and VS8	Below 268 hp	0.13	

		Field Test	Factory Test
HI Pump Type	**Horsepower**	**Overall RMS**	**Overall RMS**
Gear Reducers, Radial	268 hp and above	0.17	
Slurry Pumps		0.25	0.30
Motors		See Applicable Motor Specification	See Applicable Motor Specification
Gear Reducers, Radial		Not to exceed AGMA 6000-B96 limits	Not to exceed AGMA 6000-B96 limits
Other Reducers, Axial		0.1	N/A

d. Equipment operation: Measurements are to be obtained with equipment installed and operating within capacity ranges specified and without duplicate equipment running.

e. Additional criteria:
    1) No narrow band spectral vibration amplitude components, whether sub-rotational, higher harmonic, or synchronous multiple of running speed, are to exceed 40 percent of synchronous vibration amplitude component without manufacturer's detailed verification of origin and ultimate effect of such excitation.
    2) The presence of discernable vibration amplitude peaks in Test Level 2 or 3 vibration spectra at bearing inner or outer race frequencies shall be cause for rejection of the equipment.
    3) For motors, the following shall be cause for rejection:
        a) Stator eccentricity evidenced by a spectral peak at 2 times electrical line frequency that are more than 40 percent of the peak at rotational frequency.
        b) Rotor eccentricity evidenced by a spectral peak at 2 times electrical line frequency with spectra side bands at the pole pass frequency around the 2 times line frequency peak.
        c) Other rotor problems evidenced by pole pass frequency side bands around operating speed harmonic peaks or 2 times line frequency side bands around rotor bar pass frequency or around 2 times the rotor bar pass frequency.
        d) Phasing problems evidenced by 1/3 line frequency side band spectral peaks around the 2 times electrical line frequency peak.
    4) The presence of peaks in a High Frequency Enveloping spectra plot corresponding to bearing, gear or motor rotor bar frequencies or harmonics of these frequencies shall be cause for rejection of the equipment; since inadequate lubrication of some equipment may be a cause of these peaks, lubrication shall be checked, corrected as necessary and the high frequency envelope analysis repeated.

5. Vibration testing results presentation:
    a. Provide equipment drawing with location and orientation of measurement points indicated.

    b. For each vibration measurement take and include appropriate data on equipment operating conditions at the time vibration data is taken; for pumps, compressors, and blowers record suction pressure, discharge pressure, and flow.
    c. When Vibration Spectra Data required:
        1) Plot peak vibration velocity versus frequency in cycles per minute.
        2) Label plots showing actual shaft or part rotation frequency, bearing inner and outer race ball pass frequencies, gear mesh frequencies and relevant equipment excitation frequencies on the plot; label probable cause of vibration peaks whether in excess of specification limits or not.
        3) Label plots with equipment identification and operating conditions such as tag number, capacity, pressure, driver horsepower, and point of vibration measurement.
        4) Plot motor spectra on a log amplitude scale versus frequency.
    d. For low speed equipment, plot peak vibration displacement versus frequency as well as velocity versus frequency.
    e. Provide name of manufacturer and model number of the vibration instrumentation used, including analyzer and accelerometer used together with mounting type.

3.02 PLANNING PHASE

A. Submit test plans as specified in Section 01756 - Commissioning and this Section.
    1. Indicate test start time and duration, equipment to be tested, other equipment involved or required; temporary facilities required, number and skill or trade of personnel involved; safety issues and planned safety contingencies; anticipated effect on Owner's existing equipment and other information relevant to the test.
    2. Provide locations of all instruments to be used for testing. Provide calibration records for all instrumentation.

3.03 COMMISSIONING PHASE

A. Source testing:
    1. Witnessing not required unless specified otherwise in equipment section.
    2. Witnessed tests: Schedule test date and notify Engineer at least 30 days prior to start of test.
    3. Test equipment as specified in Section 01756 - Commissioning and equipment sections.
    4. Test fluids as specified in Section 01756 - Commissioning.
    5. Submit reports as specified in Section 01756 - Commissioning

B. Installation testing:
    1. Test equipment as specified in Section 01756 - Commissioning and equipment sections.

C. Functional testing:
    1. Witnessing required as specified in Section 01756 - Commissioning.
    2. Schedule test date and notify Engineer at least 7 days prior to start of test.
    3. Test equipment as specified in equipment sections. Test fluids as specified in Section 01756 - Commissioning.

4. Submit reports as specified in Section 01756 - Commissioning.

D. Clean Water Facility Testing:
   1. Test equipment as specified in Section 01756 - Commissioning and equipment sections.

E. Closeout documentation:
   1. Provide closeout documentation as specified in Section 01756 - Commissioning and equipment sections.

3.04 PROCESS START-UP PHASE

A. Process start-up:
   1. Process start-up equipment as specified in Section 01756 - Commissioning and equipment sections.

B. Process Operational Period:
   1. Operate equipment as specified in Section 01756 - Commissioning and equipment sections.
   2. Test fluids as specified in Section 01756 - Commissioning.

END OF SECTION

THIS PAGE INTENTIONALLY LEFT BLANK

SECTION 16050

COMMON WORK RESULTS FOR ELECTRICAL

PART 1 GENERAL

1.01 SUMMARY

A. Section includes:
   1. General requirements applicable to all Electrical Work.
   2. General requirements for electrical submittals.

B. Interfaces to equipment, instruments, and other components:
   1. The Drawings, Specifications, and overall design are based on preliminary information furnished by various equipment manufacturers which identify a minimum scope of supply from the manufacturers. This information pertains to, but is not limited to, instruments, control devices, electrical equipment, packaged mechanical systems, and control equipment provided with mechanical systems.
   2. Provide all material and labor needed to install the actual equipment furnished, and include all costs to add any additional conduit, wiring, terminals, or other electrical hardware to the Work, which may be necessary to make a complete, functional installation based on the actual equipment furnished:
      a. Make all changes necessary to meet the manufacturer’s wiring requirements.
   3. Submit all such changes and additions to the Engineer for acceptance as specified in the General Conditions.
   4. Review the complete set of Drawings and Specifications in order to ensure that all items related to the electrical power and control systems are completely accounted for. Include any such items that appear on the Drawings or in the Specifications from another discipline in the scope of Work:
      a. If a conflict between Drawings and Specifications is discovered, refer conflict to the Engineer as soon as possible for resolution.
   5. Loop drawings:
      a. Provide all electrical information required in the preparation of loop drawings including, but not limited to:
         1) Conduit numbers and associated signal(s) contained within each conduit.
         2) Wire numbers.
         3) Equipment terminal numbers.
         4) Junction boxes and signal(s) contained within each junction box.
         5) Equipment power sources, and associated circuit numbers.
         6) As-built drawings detailing wiring.

C. All electrical equipment and systems for the entire Project must comply with the requirements of the Electrical Specifications, whether referenced in the individual Equipment Specifications or not:
   1. The requirements of the Electrical Specifications apply to all Electrical Work specified in other sections.

2. Inform all vendors supplying electrical equipment or systems of the requirements of the Electrical Specifications.
3. Owner is not responsible for any additional costs due to the failure of Contractor to notify all subcontractors and suppliers of the Electrical Specifications requirements.

D. Contract Documents:
    1. General:
        a. The Drawings and Specifications are complementary and are to be used together in order to fully describe the Work.
    2. Specifications:
        a. The General and Supplementary Conditions of the Contract Documents govern the Work.
        b. These requirements are in addition to all General Requirements.
    3. Contract Drawings:
        a. The Electrical Drawings show desired locations, arrangements, and components of the Electrical Work in a diagrammatic manner.
        b. Locations of equipment, control devices, instruments, boxes, panels, etc. are approximate only; exercise professional judgment in executing the Work to ensure the best possible installation:
            1) The equipment locations and dimensions indicated on the Drawings are approximate. Use the shop drawings to determine the proper layout, foundation, and pad requirements, etc. for final installation. Coordinate with all subcontractors to ensure that all electrical equipment is compatible with other equipment and space requirements. Make changes required to accommodate differences in equipment dimensions.
            2) The Contractor has the freedom to select any of the named manufacturers identified in the individual specification sections; however, the Engineer has designed the spatial equipment layout based upon a single manufacturer and has not confirmed that every named manufacturer’s equipment fits in the allotted space. It is the Contractor’s responsibility to ensure that the equipment being furnished fits within the defined space.
        c. Installation details:
            1) The Contract Drawings include typical installation details the Contractor is to use to complete the Electrical Work. For cases where a typical detail does not apply, develop installation details that may be necessary for completing the Work, and submit these details for review by the Engineer.
            2) Not all typical installation details are referenced within the Drawing set. Apply and use typical details where appropriate.
        d. Schematic diagrams:
            1) All controls are shown de-energized.
            2) Schematic diagrams show control function only. Incorporate other necessary functions for proper operation and protection of the system.
            3) Add slave relays, where required, to provide all necessary contacts for the control system or where needed to function as interposing relays for control voltage coordination, equipment coordination, or control system voltage drop considerations.

            4) Mount all devices shown on motor controller schematic diagrams in the controller compartment enclosure, unless otherwise noted or indicated.
            5) Schematic diagrams are to be used in conjunction with the descriptive operating sequences in the Contract Documents. Combine all information and furnish a coordinated and fully functional control system.

E. Alternates/alternatives:
  1. Coordinate with the General Conditions for substitute item provisions.

F. Changes and change orders:
  1. As specified in the General Conditions.

1.02 REFERENCES

A. Code compliance:
  1. The publications are referred to in the text by the basic designation only. The latest edition accepted by the Authority Having Jurisdiction of referenced publications in effect at the time of the bid governs.
  2. The standards listed are hereby incorporated into this Section.
     a. American National Standards Institute (ANSI).
     b. American Society of Civil Engineers (ASCE):
        1) ASCE 7 - Minimum Design Loads for Buildings and Other Structures.
     c. ASTM International (ASTM).
     d. Illuminating Engineering Society (IES).
     e. Institute of Electrical and Electronics Engineers (IEEE).
     f. Insulated Cable Engineers Association (ICEA).
     g. International Code Council (ICC):
        1) International Code Council Evaluation Service (ICC-ES).
           a) AC 156 - Acceptance Criteria for Seismic Certification by Shake Table Testing of Non-Structural Components (ICC-ES AC 156).
     h. International Society of Automation (ISA).
     i. National Electrical Manufacturers Association (NEMA):
        1) 250 - Enclosures for Electrical Equipment (1000 V Maximum).
     j. National Fire Protection Association (NFPA):
        1) 70 - National Electrical Code (NEC).
     k. National Institute of Standards and Technology (NIST).
     l. Underwriters' Laboratories, Inc. (UL).

B. Compliance with laws and regulations:
  1. As specified in the General Conditions.

1.03 DEFINITIONS

A. Definitions of terms and other electrical and instrumentation considerations as set forth by:
  1. IEEE.
  2. NETA.
  3. IES.
  4. ISA.
  5. NEC.
  6. NEMA.

7. NFPA.
8. NIST.

B. Specific definitions:
   1. FAT: Factory acceptance test.
   2. ICSC: Instrumentation and controls subcontractor.
   3. LCP: Local control panel: Operator interface panel that may contain an HMI, pilot type control devices, operator interface devices, control relays, etc. and does not contain a PLC or RIO.
   4. PCM: Process control module: An enclosure containing any of the following devices: PLC, RTU, or RIO.
   5. PCIS: Process control and instrumentation system.
   6. RTU: Remote telemetry unit: A controller typically consisting of a PLC, and a means for remote communications. The remote communications devices typically are radios, modems, etc.
   7. Space: That portion of the switchgear, motor control center, panelboard, switchboard or control panel that does not physically contain a device but is capable of accepting a device with no modifications to the equipment, i.e., provide all standoffs, bus, and hardware, as part of the space.
   8. Spare: That portion of the switchgear, motor control center, panelboard, switchboard or control panel that physically contains a device with no load connections to be made.
   9. VCP: Vendor control panel: Control panels that are furnished with particular equipment by a vendor other than the ICSC. These panels may contain PLCs, RIO, OIT, HMI, etc.
   10. Unequipped space: That portion of the switchgear, motor control center, panelboard, switchboard or control panel that does not physically contain a device, standoff, bus, hardware, or other equipment.

1.04 SYSTEM DESCRIPTION

A. General requirements:
   1. The Work includes everything necessary for and incidental to executing and completing the Electrical Work indicated on the Drawings and specified in the Specifications and reasonably inferable there from:
      a. The Electrical Drawings are schematic in nature; use the Structural, Architectural, Mechanical, and Civil Drawings for all dimensions and scaling purposes.
   2. It is the intent of these Specifications that the entire electrical power, instrumentation, and control system be complete and operable. Provide all necessary material and labor for the complete system from source of power to final utilization equipment, including all connections, testing, calibration of equipment furnished by others as well as equipment furnished by the Contractor, whether or not specifically mentioned but which are necessary for successful operation.
   3. Provide all Electrical Work, including conduit, field wiring, and connections by the electrical subcontractor under the provisions of the Electrical Specifications for all aspects of the Work.
   4. Coordinate all aspects of the Work with the electrical subcontractor and other subcontractors before bidding in order to ensure that all costs associated with a complete installation are included. The Owner is not responsible for any

change orders due to lack of coordination of the Work between the Contractor, the electrical subcontractor, the other subcontractors or suppliers.
5. Provide all trenching, forming, rebar, concrete, back filling, hard surface removal and replacement, for all items associated with the Electrical Work and installation:
    a. As specified in the Contract Documents.
6. Defective work:
    a. As specified in the General Conditions.
7. Utility coordination: Coordinate with the electric and telephone utilities as required by Section 16210 - Utility Coordination.

B. The new electrical system for the Gibson Oaks WPF shall include, but not be limited to:
1. New electric utility service.
2. Addition of a new generator and automatic transfer switching.
3. New switchboard and two motor control centers.

C. The new electrical system for the Sherwood Lakes site shall include, but not be limited to:
1. New service-entrance breaker.
2. Addition of a new generator and automatic transfer switching.
3. New 480V distribution panelboard, individually enclosed reduced voltage motor starters, lighting transformer and panelboard, and PCM cabinet.

1.05 SUBMITTALS

A. Furnish submittals as specified in Section 01330 - Submittal Procedures and this Section.

B. General:
1. Instruct all equipment suppliers of submittals and operation and maintenance manuals of the requirements in this Section.
2. Furnish the submittals required by each section in the Electrical Specifications.
3. Adhere to the wiring numbering scheme specified in Section 16075 - Identification for Electrical Systems throughout the Project:
    a. Uniquely number each wire.
    b. Wire numbers must appear on all Equipment Drawings.
4. Use equipment and instrument tags, as indicated on the Drawings, for all submittals.

C. Submittal organization:
1. First page:
    a. Specification section reference.
    b. Name and telephone number of individual who reviewed submittal before delivery to Engineer.
    c. Name and telephone number of individual who is primarily responsible for the development of the submittal.
    d. Place for Contractor’s review stamp and comments.
2. Next pages:
    a. Provide confirmation of specification compliance:
        1) Specification section: Include with each submittal a copy of the relevant specification section.

            - a) Indicate in the left margin, next to each pertinent paragraph, either compliance with a check (√) or deviation with a consecutive number (1, 2, 3).
            - b) Provide a list of all numbered deviations with a clear explanation and reason for the deviation.
    - b. Include a response in writing to each of the Engineer’s comments or questions for submittal packages which are re-submitted:
        - 1) In the order that the comments or questions were presented throughout the submittal.
        - 2) Referenced by index section and page number on which the comment appeared.
        - 3) Acceptable responses to Engineer’s comments are either:
            - a) Engineer’s comment or change is accepted and appropriate changes are made.
            - b) Explain why comment is not accepted or requested change is not made.
            - c) Explain how requirement will be satisfied in lieu of comment or change requested by Engineer.
        - 4) Any re-submittal, which does not contain responses to the Engineer’s previous comments shall be returned for Revision and Re-submittal.
        - 5) No further review by the Engineer will be performed until a response for previous comments has been received.
- 3. Remaining pages:
    - a. Actual submittal data:
        - 1) Organize submittals in exactly the same order as the items are referenced, listed, and/or organized in the specification section.
        - 2) For submittals that cover multiple devices used in different areas under the same specification section, the submittal for the individual devices must list the area where the device is intended to be used.

D. Submittal requirements:
- 1. Furnish submittals that are fully indexed with a tabbed divider for every component.
- 2. Sequentially number pages within the tabbed sections. Submittals and operation and maintenance manuals that are not fully indexed and tabbed with sequentially numbered pages, or are otherwise unacceptable, will be returned without review.
- 3. Edit all submittals and operation and maintenance manuals so that the submittal specifically applies to only the equipment furnished.
    - a. Neatly cross out all extraneous text, options, models, etc. that do not apply to the equipment being furnished, so that the information remaining is only applicable to the equipment being furnished.
- 4. Submit copies of shop drawings, and product data:
    - a. Show dimensions, construction details, wiring diagrams, controls, manufacturers, catalog numbers, and all other pertinent details.

5. Where submittals are required, provide a separate submittal for each specification section. In order to expedite construction, the Contractor may make more than 1 submittal per specification section, but a single submittal may not cover more than 1 specification section:
    a. The only exception to this requirement is when 1 specification section covers the requirements for a component of equipment specified in another section. (For example, circuit breakers are a component of switchgear. The switchgear submittal must also contain data for the associated circuit breakers, even though they are covered in a different specification section.)
6. Exceptions to Specifications and Drawings:
    a. Include a list of proposed exceptions to the Specifications and Drawings along with a detailed explanation of each.
    b. If there is insufficient explanation for the exception or deviation, the submittal will be returned requiring revision and re-submittal.
    c. Acceptance of any exception is at the sole discretion of the Engineer.
        1) Provide all items (materials, features, functions, performance, etc.) required by the Contract Documents that are not accepted as exceptions.
    d. Replace all items that do not meet the requirements of the Contract Documents, which were not previously accepted as exceptions, even if the submittals contained information indicating the failure to meet the requirements.
7. Specific submittal requirements:
    a. Shop drawings:
        1) Required for materials and equipment listed in this and other sections.
        2) Furnish sufficient information to evaluate the suitability of the proposed material or equipment for the intended use, and for compliance with these Specifications.
        3) Shop drawings requirements:
            a) Front, side, and, rear elevations, and top and bottom views, showing all dimensions.
            b) Locations of conduit entrances and access plates.
            c) Component layout and identification.
            d) Schematic and wiring diagrams with wire numbers and terminal identification.
            e) Connection diagrams, terminal diagrams, internal wiring diagrams, conductor size, etc.
            f) Anchoring method and leveling criteria, including manufacturer’s recommendations for the Project site seismic criteria.
            g) Weight.
            h) Finish.
            i) Nameplates:
                (1) As specified in Section 16075 - Identification for Electrical Systems.
            j) Temperature limitations, as applicable.
    b. Product data:
        1) Submitted for non-custom manufactured material listed in this and other sections and shown on shop drawings.

        2) Include:
            a) Catalog cuts.
            b) Bulletins.
            c) Brochures.
            d) Quality photocopies of applicable pages from these documents.
            e) Identify on the data sheets the Project name, applicable specification section, and paragraph.
            f) Identify model number and options for the actual equipment being furnished.
            g) Neatly cross out options that do not apply or equipment not intended to be supplied.
    c. Detailed sequence of operation for all equipment or systems.

E. Operation and maintenance manuals:
1. As specified in Section 01782 - Operation and Maintenance Data.
2. Furnish the Engineer with a complete set of written operation and maintenance manuals 8 weeks before Functional Acceptance Testing.
3. Additional operation and maintenance manual requirements:
    a. Completely index manuals with a tab for each section:
        1) Each section containing applicable data for each piece of equipment, system, or topic covered.
        2) Assemble manuals using the approved shop drawings, and include, the following types of data:
            a) Complete set of 11-inch by 17-inch drawings of all equipment.
            b) Complete set of control schematics.
            c) Complete parts list for all equipment being provided.
            d) Catalog data for all products or equipment furnished.

F. Material and equipment schedules:
1. Furnish a complete schedule and/or matrix of all materials, equipment, apparatus, and luminaries that are proposed for use:
    a. Include sizes, names of manufacturers, catalog numbers, and such other information required to identify the items.

G. Schedule of values:
1. In addition to completing all items referred to in the schedule of values, Section 01292 - Schedule of Values, submit per unit material and labor costs used in developing the final bid for the electrical system, for the express purpose of pricing and cost justification for any proposed change orders. In addition to the items shown on the schedule of values, provide per unit material and labor costs for conduit and wire installation for specific types, sizes, and locations as indicated on the Drawings and Conduit Schedule. It is the responsibility of the electrical subcontractor to prove to the Engineer’s satisfaction that said per unit costs were used in the development of the final Bid amount.

H. Roof penetrations:
1. Submit details of all portions of the electrical installation that penetrate the roof. Include details showing support of the penetrating component, and the sealing means to be utilized.

I. Record Documents:
   1. Furnish as specified in Section 01770 - Closeout Procedures.
   2. Provide Record Documents of all Electrical Drawings.
   3. Record Drawing requirements:
      a. Update Record Drawings weekly.
      b. Record Drawings must be fully updated as a condition of the monthly progress payments.
      c. Submit Record Drawings upon completion of the Work for final review.
      d. Clearly and neatly show all changes including the following:
         1) All existing pipe, conduit, wire, instruments or other structures encountered or uncovered during construction.
   4. Shop drawings:
      a. Upon completion of the Work, update all shop drawings to indicate the final as-built configuration of the systems:
         1) Provide as-built shop drawings for all electrical equipment on 11-inch by 17-inch paper.
            a) Size all drawings to be readable and legible on 11-17 inch media.
         2) Provide electronic copies of these documents on CD-ROM or DVD disks in PDF format.
   5. Review and corrections:
      a. Correct any record documents or other documents found to be incomplete, not accurate, of poor quality, or containing errors.
      b. Promptly correct and re-submit record documents returned for correction.

J. Test reports:
   1. As specified in Section 01330 - Submittal Procedures.
   2. Include the following:
      a. A description of the test.
      b. List of equipment used.
      c. Name of the person conducting the test.
      d. Date and time the test was conducted.
      e. All raw data collected.
      f. Calculated results.
      g. Each report signed by the person responsible for the test.
   3. Additional requirements for field acceptance test reports are specified in Sections 01756 - Commissioning and 16950 - Field Electrical Acceptance Tests.

K. Calculations:
   1. Where required by specific Electrical Specifications:
      a. Because these calculations are being provided by a registered professional engineer, they will be reviewed for form, format, and content but will not be reviewed for accuracy and calculation means.

1.06 QUALITY ASSURANCE

A. Furnish all equipment listed by and bearing the label of UL or of an independent testing laboratory acceptable to the Engineer and the Authority Having Jurisdiction.

1.07 DELIVERY, STORAGE, AND HANDLING

A. As specified in Section 01600 - Product Requirements.

B. Shipping precautions:
   1. After completion of shop assembly and successful factory testing, pack all equipment in protective crates, and enclose in heavy duty polyethylene envelopes or secured sheeting to provide complete protection from damage, dust, and moisture.
   2. Place dehumidifiers, when required, inside the polyethylene coverings.
   3. Skid-mount the equipment for final transport.
   4. Provide lifting rings for moving without removing protective covering.
   5. Display boxed weight on shipping tags together with instructions for unloading, transporting, storing, and handling at the job site.

C. Delivery and inspection:
   1. Deliver products in undamaged condition, in manufacturer's original container or packaging with identifying labels intact and legible. Include date of manufacture on label.

D. Special instructions:
   1. Securely attach special instructions for proper field handling, storage, and installation to each piece of equipment before packaging and shipment.

1.08 PROJECT OR SITE CONDITIONS

A. Site conditions:
   1. Provide an electrical, instrumentation and control system, including all equipment, raceways, and any other components required for a complete installation that meets the environmental conditions for the Site as specified in the General Requirements and below.
   2. Wind load resistance:
      a. Provide electrical equipment with construction and anchorage to supporting structures designed to resist site wind loads as specified in Section 01614 - Wind Design Criteria.
   3. Altitude, temperature and humidity:
      a. Provide all electrical components and equipment fully rated for continuous operation at this altitude, with no additional derating factors applied.
      b. Provide additional temperature conditioning equipment to maintain all equipment in non-conditioned spaces subject to these ambient temperatures, with a band of 10 degrees Fahrenheit above the minimum operating temperature and 10 degrees Fahrenheit below maximum operating temperature, as determined by the equipment manufacturer's guidelines:
         1) Provide all power conduits wiring for these devices (e.g. heaters, fans, etc.) whether indicated on the Drawings or not.
   4. Site security:
      a. Abide by all security and safety rules concerning the Work on the Site.
   5. Outdoor installations:
      a. Provide electrical, instrumentation and control equipment suitable for operation in the ambient conditions where the equipment is located.

b. Provide heating, cooling, and dehumidifying devices incorporated into and included with electrical equipment, instrumentation and control panels to maintain the enclosures within the rated environmental operating ranges as specified in this Section for the equipment:
   1) Provide all wiring necessary to power these devices.

B. Provide enclosures for electrical, instrumentation and control equipment, regardless of supplier or subcontractor furnishing the equipment, that meet the requirements outlined in NEMA Standard 250 for the following types of enclosures:
1. NEMA Type 1: Intended for indoor use, primarily to provide a degree of protection from accidental contact with energized parts or equipment.
2. NEMA Type 4: Intended for indoor or outdoor use, primarily to protect equipment from exposure to windblown dust and rain, splashing or hose directed water, ice formation, and freezing.
3. NEMA Type 4X: Made from corrosion resistant materials and are intended for indoor or outdoor use, primarily to protect equipment from exposure to windblown dust and rain, splashing or hose directed water, ice formation and freezing, and corrosion. Provide specific materials as specified or indicated on the Drawings.
4. NEMA Type 12: Intended for indoor use, primarily to provide a degree of protection from dust, falling dirt and dripping non-corrosive liquids.
5. NEMA Type 6: Rated for submergence.
6. NEMA Type 6P: Rated for prolonged submergence.

C. Plant area Electrical Work requirements:
1. Provide all Electrical Work in accordance with the following table, unless otherwise specifically indicated on the Drawings:

PLANT AREA	**NEMA ENCLOSURE TYPE**	**EXPOSED CONDUIT TYPE**	**ENVIRONMENT W = WET D = DAMP C = CLEAN/DRY X = CORROSIVE H = HAZARDOUS**	**SUPPORT MATERIALS**
Operations Building	1, 12	RAC	C	SST or AL
Electrical Rooms	1, 12	RAC	C	SST or AL
Exterior Process Areas	4X SST	PCA	W	SST
Chemical Area	4X Fiberglass	PCA	W, X	SST

2. Modify exposed conduit runs as specified in Section 16130 - Conduits.

1.09 SEQUENCING (NOT USED)

1.10 SCHEDULING

A. General:
1. As specified in Sections 01312 - Project Meetings.
2. Testing requirements are specified in Section 16950 - Field Electrical Acceptance Tests and other sections.

3. General scheduling requirements shall be coordinated with the Contractor.
4. Work restrictions and other scheduling requirements are specified in Section 01140 - Work Restrictions.

1.11 WARRANTY

A. Warrant the Electrical Work as specified in the General Conditions:
    1. Provide additional warranty as specified in the individual Electrical Specifications.

1.12 SYSTEM START-UP

A. Replace or modify equipment, software, and materials that do not achieve design requirements after installation in order to attain compliance with the design requirements:
    1. Following replacement or modification, retest the system and perform additional testing to place the complete system in satisfactory operation and obtain compliance acceptance from the Engineer.

1.13 OWNER'S INSTRUCTIONS (NOT USED)

1.14 MAINTENANCE

A. Before Substantial Completion, perform all maintenance activities required by any sections of the Specifications including any calibrations, final adjustments, component replacements or other routine service required before placing equipment or systems in service.

B. Furnish all spare parts as required by other sections of the Specifications.

PART 2 PRODUCTS

2.01 MANUFACTURERS

A. Provide similar items of same manufacturer throughout the electrical and instrumentation portion of the Project.

B. Allowable manufacturers are specified in individual Electrical Specifications.

2.02 EXISTING PRODUCTS (NOT USED)

2.03 MATERIALS

A. Furnish all materials under this Contract that are new, free from defects, and standard products produced by manufacturers regularly engaged in the production of these products and that bear all approvals and labels as required by the Specifications.

B. Provide materials complying with the applicable industrial standard as specified in the General Conditions.

C. Stainless steel:
   1. Where stainless steel is indicated or used for any portion of the Electrical Work, provide a non-magnetic, corrosion-resistant alloy, ANSI Type 316, satin finish.
   2. Provide exposed screws of the same alloys.
   3. Provide finished material free of any burrs or sharp edges.
   4. Use only stainless steel hardware, when chemically compatible, in all areas that are or could be in contact with corrosive chemicals.
   5. Use stainless steel hardware, when chemically compatible, in all chemical areas or areas requiring NEMA Type 4X construction.
   6. Do not use stainless steel in any area containing chlorine, gas or solution, chlorine products or ferric chloride.

2.04 MANUFACTURED UNITS (NOT USED)

2.05 EQUIPMENT (NOT USED)

2.06 COMPONENTS (NOT USED)

2.07 ACCESSORIES (NOT USED)

2.08 MIXES (NOT USED)

2.09 FABRICATION (NOT USED)

2.10 FINISHES (NOT USED)

2.11 SOURCE QUALITY CONTROL

A. Provide all equipment that is new, free from defects, and standard products produced by manufacturers regularly engaged in the production of these products.

PART 3 EXECUTION

3.01 EXAMINATION

A. The electrical subcontractor is encouraged to visit the site of the existing facilities to examine the premises completely before bidding.

B. It is the electrical subcontractor's responsibility to be fully familiar with the existing conditions and local requirements and regulations.

C. Review the site conditions and examine all shop drawings for the various items of equipment in order to determine exact routing and final terminations for all wiring and cables.

3.02 PREPARATION (NOT USED)

3.03 INSTALLATION

A. Equipment locations shown on Electrical Drawings may change due to variations in equipment size or minor changes made by others during construction:
  1. Verify all dimensions indicated on the Drawings:
    a. Actual field conditions govern all final installed locations, distances, and levels.
  2. Review all Contract Documents and approved equipment shop drawings and coordinate Work as necessary to adjust to all conditions that arise due to such changes.
  3. Make minor changes in location of equipment before rough in, as directed by the Owner or Engineer.
  4. Provide a complete electrical system:
    a. Install all extra conduits, cables, and interfaces as may be necessary to provide a complete and operating electrical system.

B. Install the equipment in accordance with the accepted installation instructions and anchorage details to meet the seismic and wind load requirements at the Project site.

C. Cutting and patching:
  1. Perform all cutting, patching, channeling, core drilling, and fitting required for the Electrical Work, except as otherwise directed:
    a. Secure the permission of the Engineer before performing any operation likely to affect the strength of a structural member such as drilling, cutting or piercing:
      1) Before cutting, channeling, or core drilling any surface, ensure that no penetration of any other systems will be made:
        a) Verify that area is clear and free of conduits, cables, piping, ductwork, post-tensioning cables, etc.
        b) Use tone-locate system or X-ray to ensure that area is clear of obstructions.
    b. Review the complete Drawing set to ensure that there are no conflicts or coordination problems before cutting, channeling, or core drilling any surface.
  2. Perform all patching to the same quality and appearance as the original work. Employ the proper tradesmen to secure the desired results. Seal around all conduits, wires, and cables penetrating walls, ceilings, and floors in all locations with a fire stop material, typically:
    a. 3M: CP 25WB+: Caulk.
    b. 3M: Fire Barrier: Putty.
  3. Use the installation details indicated on the Drawings as a guide for acceptable sealing methods.

D. Install all conduits and equipment in such a manner as to avoid all obstructions and to preserve headroom and keep openings and passageways clear:
  1. Install all conduits and equipment in accordance with working space requirements in accordance with the NEC.
    a. This includes any panel, disconnect switch or other equipment that can be energized while open exposing live parts regardless of whether it is likely to require examination or has serviceable parts.

2. Where the Drawings do not show dimensions for locating equipment, install equipment in the approximate locations indicated on the Drawings.
    a. Adjust equipment locations as necessary to avoid any obstruction or interferences.
3. Where an obstruction interferes with equipment operation or safe access, relocate the equipment.
4. Where the Drawings do not indicate the exact mounting and/or supporting method to be used, use materials and methods similar to the mounting details indicated on the Drawings.

E. Earthwork and concrete:
    1. Install all trenching, shoring, concrete, backfilling, grading and resurfacing associated with the Electrical Work:
        a. Requirements as specified in the Contract Documents.

F. Roof penetrations:
    1. Seal conduit penetrations in accordance with roofing manufacturer's instructions.

G. Terminations:
    1. Provide and terminate all conductors required to interconnect power, controls, instruments, panels, and all other equipment.

H. Miscellaneous installation requirements:
    1. In case of interference between electrical equipment indicated on the Drawings and the other equipment, notify the Engineer as specified in the General Conditions.
    2. Location of manholes and pullboxes indicated on the Drawings are approximate. Coordinate exact location of manholes and pullboxes with Mechanical and Civil Work.
    3. Provide additional manholes or pullboxes to those shown where they are required to make a workable installation.
    4. Circuits of different service voltage:
        a. Voltage and service levels:
            1) Low voltage: 120 V to 480 V.
            2) Instrumentation: Less than 50 VDC.
        b. Install different service voltage circuits in separate raceways, and junction boxes, manholes, hand holes, and pullboxes.

I. Labeling:
    1. Provide all nameplates and labels as specified in Sections 16075 - Identification for Electrical Systems and 16305 - Electrical System Studies.

J. Equipment tie-downs:
    1. Anchor all instruments, control panels, and equipment by methods that comply with seismic and wind bracing criteria, which apply to the Site.
    2. All control panels, VCPs, LCPs, RTUs, PCMs, etc., must be permanently mounted and tied down to structures in accordance with the Project seismic criteria.

3.04 ERECTION, INSTALLATION, APPLICATION, CONSTRUCTION (NOT USED)

3.05 REPAIR/RESTORATION (NOT USED)

3.06 RE-INSTALLATION (NOT USED)

3.07 COMMISSIONING

A. As specified in Section 01756 - Commissioning.

B. For Owner and Engineer witnessed FAT:
   1. Contractor is responsible for the Owner's and Engineer's costs associated with FAT as specified in Section 01756 - Commissioning.

C. Owner training:
   1. As specified in Section 01756 - Commissioning and in this Section.

D. Source testing (FAT):
   1. Provide source testing and owner training on electrical equipment as defined in the table below:

Table 1: Source Testing and Owner Training Requirements:

		Source Testing	**Owner Training Requirements**	
Section Number	**Section Title**	**(Witnessed or Non-witnessed)**	**Maintenance (hrs per session)**	**Operation (hrs per session)**
16232	Single Diesel Fueled Engine Generator Above 200 KW	Non-Witnessed	6	4
16264	Variable Frequency Drives 60 - 500 Horsepower	Witnessed	16	16
16422	Motor Starters	Non-Witnessed	8	8
16442	Individually-Mounted Circuit Breaker Switchboards	Non-Witnessed	8	8

3.08 FIELD QUALITY CONTROL

A. Inspection:
   1. Allow for inspection of electrical system installation as specified in Section 01450 - Quality Control.
   2. Provide any assistance necessary to support inspection activities.
   3. Engineer inspections may include, but are not limited to, the following:
      a. Inspect equipment and materials for physical damage.
      b. Inspect installation for compliance with the Drawings and Specifications.
      c. Inspect installation for obstructions and adequate clearances around equipment.
      d. Inspect equipment installation for proper leveling, alignment, anchorage, and assembly.
      e. Inspect equipment nameplate data to verify compliance with design requirements.
      f. Inspect raceway installation for quality workmanship and adequate support.

    - g. Inspect cable terminations.
  4. Inspection activities conducted during construction do not satisfy inspection or testing requirements specified in Section 16950 - Field Electrical Acceptance Tests.

B. Field acceptance testing (Functional Testing):
  1. Notify the Engineer when the Electrical Work is ready for field acceptance testing.
  2. Perform the field acceptance tests as specified in Section 16950 - Field Electrical Acceptance Tests.
  3. Record results of the required tests along with the date of test:
    - a. Use conduit identification numbers to indicate portion of circuit tested.

C. Workmanship:
  1. Leave wiring in panels, manholes, boxes, and other locations neat, clean, and organized:
    - a. Neatly coil and label spare wiring lengths.
    - b. Shorten, re-terminate, and re-label excessive used as well as spare wire and cable lengths, as determined by the Engineer.

3.09 ADJUSTING (NOT USED)

3.10 CLEANING

A. As specified in Section 01770 - Closeout Procedures.

B. Remove all foreign material and restore all damaged finishes to the satisfaction of the Engineer and Owner.

C. Clean and vacuum all enclosures to remove all metal filings, surplus insulation and any visible dirt, dust or other matter before energization of the equipment or system start-up:
  1. Use of compressors or air blowers for cleaning is not acceptable.

D. Clean and re-lamp all new and existing luminaries that were used in the areas affected by the construction, and return all used lamps to the Owner.

E. As specified in other sections of the Contract Documents.

3.11 PROTECTION

A. Protect all Work from damage or degradation until Substantial Completion.

B. Maintain all surfaces to be painted in a clean and smooth condition.

3.12 SCHEDULES (NOT USED)

END OF SECTION

SECTION 16060

GROUNDING AND BONDING

PART 1 GENERAL

1.01 SUMMARY

A. Section includes: Grounding materials and requirements.

1.02 REFERENCES

A. As specified in Section 16050 - Common Work Results for Electrical.

B. ASTM International (ASTM):
   1. B3 - Standard Specification for Soft or Annealed Copper Wire.
   2. B8 - Standard Specification for Concentric-Lay-Stranded Copper Conductors, Hard, Medium-Hard, or Soft.

C. Institute of Electrical and Electronics Engineers (IEEE):
   1. 81 - IEEE Guide for Measuring Earth Resistivity, Ground Impedance, and Earth Surface Potentials of a Grounding System.

D. Underwriters Laboratories, Inc. (UL):
   1. 467 - Ground and Bonding Equipment.

1.03 DEFINITIONS

A. As specified in Section 16050 - Common Work Results for Electrical.

1.04 SYSTEM DESCRIPTION

A. Ground equipment and raceway systems so that the completed installation conforms to all applicable code requirements.

B. Provide a complete electrical grounding system as indicated on the Drawings and as specified including but not limited to:
   1. Grounding electrodes.
   2. Bonding jumpers.
   3. Ground connections.

C. Provide bonding jumpers and wire, grounding bushings, clamps and appurtenances required for complete grounding system to bond equipment and raceways to equipment grounding conductors.

D. The ground system resistance (electrode to ground) of the completed installation, as determined by tests specified in Section 16950 - Field Electrical Acceptance Tests, shall be:
   1. 5 ohms or less for industrial systems.
   2. 1 ohm or less for electrical buildings.

1.05 SUBMITTALS

A. Furnish submittals as specified in Sections 01330 - Submittal Procedures and 16050 - Common Work Results for Electrical.

B. Product data:
  1. Catalog cut sheets.

1.06 QUALITY ASSURANCE

A. As specified in Section 16050 - Common Work Results for Electrical.

B. All grounding components and materials shall be UL listed and labeled.

1.07 DELIVERY, STORAGE, AND HANDLING

A. As specified in Section 16050 - Common Work Results for Electrical.

1.08 PROJECT/SITE CONDITIONS (NOT USED)

1.09 SEQUENCING (NOT USED)

1.10 SCHEDULING (NOT USED)

1.11 WARRANTY

A. As specified in Section 16050 - Common Work Results for Electrical.

1.12 SYSTEM START-UP

A. As specified in Section 16050 - Common Work Results for Electrical.

1.13 OWNER'S INSTRUCTIONS (NOT USED)

1.14 MAINTENANCE (NOT USED)

PART 2 PRODUCTS

2.01 MANUFACTURERS

A. Exothermic connectors: One of the following or equal:
  1. Erico.
  2. Harger.
  3. Burndy Weld.

B. Ground rods: One of the following or equal:
  1. Erico.
  2. Harger.
  3. Nehring.
  4. Thomas & Betts.

C. Ground cable: One of the following or equal:
   1. Erico.
   2. Harger.
   3. Nehring.
   4. Southwire.

D. Precast ground well boxes: One of the following or equal:
   1. Brooks Products, 3-RT Valve Box.
   2. Christy Concrete Products, G12 Valve Box.

2.02 EXISTING PRODUCTS (NOT USED)

2.03 MATERIALS

A. Ground rod:
   1. Minimum: 3/4-inch diameter, 20 feet long.
   2. Uniform 10 mil covering of electrolytic copper metallically bonded to a rigid steel core:
      a. The copper-to-steel bond shall be corrosion resistant.
   3. In accordance with UL 467.
   4. Sectional type joined by threaded copper alloy couplings.
   5. Fit the top of the rod with a threaded coupling and steel-driving stud.

B. Ground cable:
   1. Requirements:
      a. Soft drawn (annealed).
      b. Concentric lay, coarse stranded in accordance with ASTM B8.
      c. Bare tinned copper in accordance with ASTM B33.
   2. Size is as indicated on the Drawings, but not less than required by the NEC.

C. Exothermic welds:
   1. Current carrying capacity equal to that of the conductor.
   2. Permanent molecular bond that cannot loosen or corrode over time.
   3. Will not deteriorate with age.

D. Equipment grounding conductors:
   1. Conductors shall be the same type and insulation as the load circuit conductors:
      a. Use 600-volt insulation for the equipment grounding conductors for medium voltage systems.
   2. Minimum size in accordance with the NEC.

E. Grounding electrode conductors:
   1. Minimum size in accordance with the NEC.

F. Main bonding jumpers and bonding jumpers:
   1. Minimum size in accordance with the NEC.

2.04 MANUFACTURED UNITS (NOT USED)

2.05 EQUIPMENT (NOT USED)

2.06 COMPONENTS (NOT USED)

2.07 ACCESSORIES

A. Precast ground well boxes:
   1. Minimum 10-inch interior diameter.
   2. Traffic-rated cast iron cover.
   3. Permanent “GROUND” marking on cover.

2.08 MIXES (NOT USED)

2.09 FABRICATION (NOT USED)

2.10 FINISHES (NOT USED)

2.11 SOURCE QUALITY CONTROL (NOT USED)

PART 3 EXECUTION

3.01 EXAMINATION (NOT USED)

3.02 PREPARATION (NOT USED)

3.03 INSTALLATION

A. As specified in Section 16050 - Common Work Results for Electrical.

B. Provide a separate, green insulated, grounding conductor in each raceway independent of raceway material:
   1. Multi-conductor power and control cables shall include an integral green insulated grounding conductor.
   2. Provide a separate grounding conductor in each individual raceway for parallel feeders.

C. Provide a separate grounding conductor for each motor and connect at motor terminal box. Do not use bolts securing motor box to frame or cover for grounding connectors:
   1. When grounding motors driven by variable frequency drives (VFD) comply with the requirements of the VFD manufacturer.

D. Provide a grounding type bushing with lug for connection of grounding conductor for conduits that originate from each motor control center section, switchboard, or panelboard:
   1. Individually bond these raceways to the ground bus in the equipment.

E. Provide grounding type bushings with lugs for connection of grounding conductor at both ends of metallic conduit runs. Bond ground bushings to the grounding system.

F. Provide a green insulated wire-grounding jumper from the ground screw to a box grounding screw and, for grounding type devices, to equipment grounding conductor.

G. Interconnect the secondary switchgear, switchboard, or panelboard neutral bus to the ground bus in the secondary switchgear, switchboard, or panelboard compartment, only at service entrance point or after a transformer.

H. Duct bank ground system:
   1. Provide a bare tinned-copper grounding conductor the entire length of each duct bank. Embed in the concrete for concrete encased duct banks and install above conduit for non-concrete encased ductbanks, or as indicated on the Drawings. Install in accordance with all Specifications.
   2. Bond duct bank ground conductors together where duct banks join, merge, intersect, or split.

I. Grounding at service (600 V or Less):
   1. Connect the neutral to ground only at one point within the enclosure of the first disconnecting means on the load side of the service transformer.

J. Ground connections:
   1. All connections to the ground grid system, the duct bank grounding system, equipment, ground rods, etc., shall be made using exothermic welds as indicated on the Drawings, UL listed, and labeled for the application.
   2. Make ground connections in accordance with the manufacturer's instructions.
   3. Do not conceal or cover any ground connections until the Engineer or authorized representative has established and provided written confirmation that every grounding connection is as indicated on the Drawings and specified in the Specifications.

K. Grounding electrode system:
   1. Ground ring:
      a. Provide all trenching and materials necessary to install the ground ring as indicated on the Drawings.
      b. Ground ring conductor shall be in direct contact with the earth, or where embedded, concrete, of the size as indicated on the Drawings.
      c. Minimum burial depth 36 inches or as indicated on the Drawings.
      d. Re-compact disturbed soils to original density in 6-inch lifts.
   2. Ground rods:
      a. Locations as indicated on the Drawings.
      b. Length of rods forming an individual ground array shall be equal in length.
      c. Drive ground rods and install grounding conductors before construction of concrete slabs and duct banks.
   3. Metal underground water pipe:
      a. Bond metal underground domestic water pipe to grounding electrode system.
   4. Metal frame of building or structure:
      a. Bond metal frame of building or structure to grounding electrode system.
   5. Extend grounding conductors through concrete to accessible points for grounding equipment and electrical enclosures.
   6. Where grounding conductors are not concrete-encased or direct buried, install in Schedule 40 PVC conduit for protection.
   7. Install grounding system at each structure where switchgear, motor control centers, switchboards, panelboards, panels, or other electrical equipment are installed.

L. Shield grounding:
  1. Shielded instrumentation cable shall have its shield grounded at one end only unless shop drawings indicate otherwise:
    a. The grounding point shall be at the control panel or at the power source end of the signal carried by the cable.
  2. Terminate the shield drain wire on a dedicated terminal block.
  3. Use manufacturer’s terminal block jumpers to interconnect ground terminals.
  4. Connection to the panel main ground bus shall be via a green No. 12 conductor to the main ground bus for the panel.

M. Antenna ground:
  1. Install individual ground rod or ground system for communication system antenna:
    a. Install a dedicated grounding electrode conductor from the antenna ground to the grounding electrode system.
    b. Do not connect any other grounds to the antenna grounding electrode conductor.
  2. Install ground rod or ground system in accordance with the radio manufacturer's requirements.

N. Where indicated on the Drawings, install ground rods in precast ground wells.

3.04 ERECTION, INSTALLATION, APPLICATION, CONSTRUCTION (NOT USED)

3.05 REPAIR/RESTORATION (NOT USED)

3.06 RE-INSTALLATION (NOT USED)

3.07 COMMISSIONING

A. As specified in Section 01756 - Commissioning.

3.08 FIELD QUALITY CONTROL

A. As specified in Section 16050 - Common Work Results for Electrical.

B. Measure grounding electrode system resistance to ground in accordance with IEEE 81.

3.09 ADJUSTING

A. Under the direction of the Engineer, add additional parallel connected ground rods and/or deeper driven rods until the ground resistance measurement meets the specified resistance requirements:
  1. Use of salts, water, or compounds to attain the specified ground resistance is not acceptable.

3.10 CLEANING (NOT USED)

3.11 PROTECTION

A. As specified in Section 16050 - Common Work Results for Electrical.

3.12 SCHEDULES (NOT USED)

END OF SECTION

SECTION 16070

HANGERS AND SUPPORTS

PART 1 GENERAL

1.01 SUMMARY

A. Section includes:
   1. Mounting and supporting electrical equipment and components.

1.02 REFERENCES

A. As specified in Section 16050 - Common Work Results for Electrical.

B. ASTM International (ASTM):
   1. A123 - Standard Specification for Zinc (Hot-Dip Galvanized) Coatings on Iron and Steel Products.
   2. A153 - Standard Specification for Zinc Coating (Hot-Dip) on Iron and Steel Hardware.
   3. A240 - Standard Specification for Chromium and Chromium-Nickel Stainless Steel Plate, Sheet, and Strip for Pressure Vessels and for General Applications.

1.03 DEFINITIONS

A. As specified in Section 16050 - Common Work Results for Electrical.

1.04 SYSTEM DESCRIPTION

A. Design requirements:
   1. Conform to the requirements of the Building Code.
   2. Demonstrate the following using generally accepted engineering methods:
      a. That the anchors to the structure are adequate to resist the loads generated in accordance with the Building Code and equipment requirements.
      b. That the required load capacity of the anchors can be fully developed in the structural materials to which they are attached.
   3. Design loading and anchoring requirements:
      a. As indicated in the Building Code unless otherwise specified.
      b. Seismic loading requirements:
         1) Freestanding, suspended, or wall-hung equipment shall be anchored in place by methods that will satisfy the requirements for the seismic design specified in Section 16050 - Common Work Results for Electrical.
      c. Wind loading requirements:
         1) All exterior equipment shall be anchored in place by methods that will satisfy the requirements for wind design specified in Section 16050 - Common Work Results for Electrical.

      d. Minimum safety factor against overturning: 1.5.
      e. The foundation and structures to which hangers and supports are attached shall be capable of withstanding all anchor loads.

B. Performance requirements:
   1. Hangers and supports individually and as a system shall resist all weights and code-required forces without deflections and deformations that would damage the supporting elements, the equipment supported, or the surrounding construction.

1.05 SUBMITTALS

A. Furnish submittals as specified in Sections 01330 - Submittal Procedures and 16050 - Common Work Results for Electrical.

B. Product data:
   1. Supports:
      a. Materials.
      b. Geometry.
      c. Manufacturer.
   2. Hardware:
      a. Materials.
      b. Manufacturer.

C. Shop drawings:
   1. Complete dimensioned and scalable shop drawings of all supporting structures, trapezes, wall supports, etc.
   2. Complete anchoring details for equipment, lighting and raceway, supporting structures, trapezes, wall supports for all equipment in excess of 200 pounds, and all freestanding supports:
      a. Stamped by a professional engineer licensed in the state where the Project is being constructed.
      b. Said submittals, by virtue of the fact that they bear the stamp of a registered engineer, will be reviewed for general consistency with the requirements specified in the Contract Documents, but not for context, accuracy, or method of calculation.
   3. Include data on attachment hardware and construction methods that will satisfy the design loading and anchoring criteria.

D. Installation instructions:
   1. Furnish anchorage instructions and requirements based on the seismic and wind conditions of the Site:
      a. Stamped by a professional engineer licensed in the state where the Project is being constructed.

1.06 QUALITY ASSURANCE

A. As specified in Section 16050 - Common Work Results for Electrical.

1.07 DELIVERY, STORAGE, AND HANDLING

A. As specified in Section 16050 - Common Work Results for Electrical.

1.08 PROJECT OR SITE CONDITIONS

A. As specified in Section 16050 - Common Work Results for Electrical.

1.09 SEQUENCING (NOT USED)

1.10 SCHEDULING (NOT USED)

1.11 WARRANTY

A. As specified in Section 16050 - Common Work Results for Electrical.

1.12 SYSTEM STARTUP

A. As specified in Section 16050 - Common Work Results for Electrical.

1.13 OWNER'S INSTRUCTIONS (NOT USED)

1.14 MAINTENANCE (NOT USED)

PART 2 PRODUCTS

2.01 MANUFACTURERS

A. One of the following or equal:
   1. Thomas & Betts.
   2. Power-Strut.
   3. Unistrut.
   4. Eaton/Cooper B-Line.
   5. Robroy Industries.

2.02 EXISTING PRODUCTS (NOT USED)

2.03 MATERIALS

A. Use materials appropriate for the area as specified in Section 16050 - Common Work Results for Electrical.

B. Stainless steel:
   1. Supports:
      a. In accordance with ASTM A240.
      b. ANSI Type 304 or 316 material.
   2. Hardware:
      a. ANSI Type 304 or 316 material.

C. Aluminum:
   1. Supports:
      a. Extruded Aluminum.
      b. Aluminum Association Alloy 6063.
   2. Hardware:
      a. Aluminum Association Alloy 5052 or ANSI Type 316 Stainless Steel.

2.04 MANUFACTURED UNITS (NOT USED)

2.05 EQUIPMENT (NOT USED)

2.06 COMPONENTS (NOT USED)

2.07 ACCESSORIES

A. Anchor bolts:
   1. As specified in Section 05190 - Mechanical Anchoring and Fastening to Concrete and Masonry.

2.08 MIXES (NOT USED)

2.09 FABRICATION (NOT USED)

2.10 FINISHES

A. Paint and finish all supporting structures as specified in Section 09900 - Painting and Section 09960 - High Performance Coatings.

2.11 SOURCE QUALITY CONTROL (NOT USED)

PART 3 EXECUTION

3.01 EXAMINATION (NOT USED)

3.02 PREPARATION (NOT USED)

3.03 INSTALLATION

A. As specified in Section 16050 - Common Work Results for Electrical.

B. Mount all raceways, cabinets, boxes, fixtures, instruments, and devices on Contractor-fabricated racks unless otherwise indicated on the Drawings.
   1. Provide the necessary sway bracing to keep trapeze type structures from swaying under seismic events or wind loading.

C. Brace and anchor freestanding equipment supports using methods that provide structural support based on the seismic loads and wind loads:
   1. Lateral deflection at top of supports not to exceed support height divided by 240 unless otherwise approved by the Engineer.

D. Provide fabricated steel support pedestals for wall mounted panels that weigh more than 200 pounds:
   1. Fabricate pedestals out of welded angle, tube sections, or preformed channel.
   2. If the supported equipment is a panel or cabinet, match the supported equipment in physical appearance and dimensions.
   3. Provide auxiliary floor supports for transformers hung from stud walls and weighing more than 200 pounds.

4. Mount all equipment, cabinets, boxes, instruments, and devices in damp or wet locations on minimum of 7/8-inch preformed mounting channel.
    a. Mount channel vertically along the length of the device so that water or moisture may run freely behind the device.

E. Corrosion protection:
    1. Isolate dissimilar metals, except where required for electrical continuity.
        a. Use neoprene washers, 9-mil polyethylene tape, or gaskets for isolation.

F. Raceway:
    1. Furnish all racks and trapeze structures needed to support the raceway from the structure.
        a. Group raceway and position on racks to minimize crossovers.
        b. Provide the necessary bracing to keep trapeze type structures from swaying under loads from cable installation, seismic forces, or wind forces.

G. Anchoring methods:
    1. Solid concrete: Anchor bolts, anchor rods or post-installed anchors as specified in Section 05190 - Mechanical Anchoring and Fastening to Concrete and Masonry.
    2. Metal surfaces: Machine screws or bolts.
    3. Hollow masonry units: Post-installed anchors as specified in Section 05190 - Mechanical Anchoring and Fastening to Concrete and Masonry.

H. When supporting devices on metal or wood stud construction, bridge studs with preformed channel, and mount the devices to the channel.

I. Recoat or seal all drilled holes, cut or scratched surfaces or with products recommended by the manufacturer.

3.04 ERECTION, INSTALLATION, APPLICATION, CONSTRUCTION (NOT USED)

3.05 REPAIR/RESTORATION (NOT USED)

3.06 RE-INSTALLATION (NOT USED)

3.07 COMMISSIONING

A. As specified in Section 01756 - Commissioning.

3.08 FIELD QUALITY CONTROL

A. As specified in Section 16050 - Common Work Results for Electrical.

3.09 ADJUSTING (NOT USED)

3.10 CLEANING (NOT USED)

3.11 PROTECTION

A. As specified in Section 16050 - Common Work Results for Electrical.

3.12 SCHEDULES (NOT USED)

END OF SECTION

SECTION 16075

IDENTIFICATION FOR ELECTRICAL SYSTEMS

PART 1 GENERAL

1.01 SUMMARY

A. Section includes:
   1. Identification of electrical equipment, devices, and components.
   2. Material, manufacturing, and installation requirements for identification devices.

1.02 REFERENCES

A. As specified in Section 16050 - Common Work Results for Electrical.

B. Occupational Safety and Health Administration (OSHA).

1.03 DEFINITIONS

A. As specified in Section 16050 - Common Work Results for Electrical.

1.04 SYSTEM DESCRIPTION

A. Nameplates:
   1. Provide a nameplate for each piece of electrical equipment and devices, control panel and control panel components.
   2. Provide all nameplates of identical style, color, and material throughout the facility.
   3. Device nameplates information:
      a. Designations as indicated on the Drawings and identified on the Process and Instrumentation Drawings.

B. Wire numbers:
   1. Coordinate the wire numbering system with all vendors of equipment so that every field wire has a unique number associated with it for the entire system:
      a. Wire numbers shall correspond to the wire numbers on the control drawings or the panel and circuit numbers for receptacles and lighting.
      b. Wire numbers shall correspond to the terminal block number to which they are attached in the control panel.
      c. Internal panel wires on a common terminal shall have the same wire number.
      d. Multi-conductor cables shall be assigned a cable number that shall be attached to the cable at intermediate pull boxes and stub-up locations beneath freestanding equipment. All multi-conductor and instrumentation cables shall be identified at pull points as described above:
         1) Label armored multi-conductor cable using the conduit number as indicated on the Drawings, following the requirements for conduit markers in Section 16130 - Conduits.

2. Provide the following wiring numbering schemes throughout the project for field wires between control panels, (CP), vendor control panels, (VCP), motor control centers, (MCC), field starters, field instruments, etc.

OR

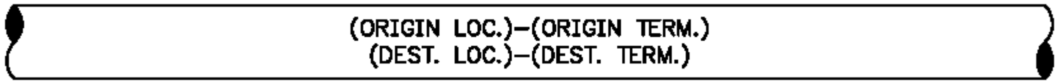

Where:

ORIGIN LOC. = Designation for originating panel or device
ORIGIN TERM. = Terminal designation at originating panel or device
DEST. LOC. = Designation for destination panel or device
DEST. TERM. = Terminal designation at destination panel or device or PLC

I/O address at destination panel:

a. Identify equipment and field instruments as the origin.
b. CPs are always identified as the destination.
c. Location is the panel designation for VCP, LCP, or CP. For connections to MCCs, location is the specific starter tag and loop number. Location is the tag and loop number for motor starters, field instruments and equipment. Any hyphen in the panel designation or tag and loop number shall be omitted.
d. Terminal designation is the actual number on the terminal block where the conductor terminates at field devices and vendor control panels. For multi-conductor cables, all terminal numbers shall be shown, separated by commas.
e. Terminal designations at motor leads shall be the motor manufacturer's standard terminal designation (e.g. T1, T2, T3, etc.).
f. Terminal designations at CPs where the field conductor connects to field terminal blocks for a PLC input or output shall be the PLC address (Note: the following PLC I/O numbering scheme is typical for Allen-Bradley, the numbering scheme should be modified to match that of the actual PLC manufacturer used for the project; coordinate with control system supplier and refer to control panel shop drawings for wiring assignments):
    1) Discrete Point: W:X:Y/Z.
       Analog Point: W:X:Y.Z.
       Where:
       W = I for input, O for output
       X = PLC number (1, 2, 3…)
       Y = Slot number (01, 02, 03…)
       Z = Terminal number (00, 01, 02…) for a discrete point or a word number for an analog point (1, 2, 3…)
g. Terminal designations at CPs where the conductor does not connect to a PLC I/O point shall be the terminal number with a "C" prefix (e.g. C0010). For common power after a fuse or neutrals after a switch, the subsequent points shall have and capital letter suffix starting with "A" (e.g. C0010A).

3. **Case 1**: Vendor control panel (VCP) to control panel (CP):
   Field wire number/label: A-B/C-D
   A = Vendor control panel number without hyphen (VCP#)
   B = Terminal number within VCP (manufacturer's or vendor's standard terminal number)
   C = Control Panel number without hyphen (CP#)
   D = Either the PLC address if the field terminal is connected directly to a PLC input or output point or the terminal number with a "C" prefix if not connected directly to a PLC I/O point (C0010)

   Examples: VCP#-10/CP#-I:1:01/01
   VCP#-10/CP#-O:1:10/07
   VCP#-10/CP#-C0100

4. **Case 2**: Field instrument to control panel (CP):
   Field wire number/label: E-F/C-D
   C = Control Panel number without hyphen (CP#)
   D = Either the PLC address if the field terminal is connected directly to a PLC input or output point or the terminal number with a "C" prefix if not connected directly to a PLC I/O point (C0010)
   E = Field mounted instrument tag and loop numbers without hyphen (EDV#)
   F = Manufacturer's standard terminal number within instrument. Use both terminal numbers for analog points separated by a comma

   Examples: TIT#-2,3/CP#-I:1:01.1
   TSH#-1/CP#-I:2:01/00

5. **Case 3**: Motor control center (MCC) to control panel (CP):
   Field wire number/label: G-B/C-D
   B = Terminal number within Motor Control Center (manufacturer's or vendor's standard terminal number)
   C = Control Panel without hyphen (CP#)
   D = Either the PLC address if the field terminal is connected directly to a PLC input or output point or the terminal number with a "C" prefix if not connected directly to a PLC I/O point (C0010)
   G = Actual starter designation in the motor control center without hyphen (MMS#)

   Examples: MMS#-10/CP#-I:1:01/01
   MMS#-10/CP#-O:1:10/07
   MMS#-10/CP#-C0100

6. **Case 4**: Motor control center (MCC) to vendor control panel (VCP):
   Field wire number/label: G-B/A-B
   A = Vendor control panel number without hyphen (VCP#)
   B = Terminal number within motor control center or vendor control panel (manufacturer's or vendors standard terminal number)
   G = Actual starter designation in the motor control center without hyphen (MMS#)

   Example: MMS#-X2/VCP#-10

7. **Case 5**: Motor leads to a motor control center (MCC):
   Field wire number/label: H-I/G-B
   B = Terminal number within motor control center (manufacturer's standard terminal number)
   G = Actual starter designation in the motor control center without hyphen (MMS#)
   H = Equipment tag and loop number without hyphen (PMP#)
   I = Motor manufacturer's standard motor lead identification (e.g. T1, T2, T3, etc.)

   Example: PMP-#-T3/MMS#-T3

8. **Case 6**: Remote or separately mounted starter or variable frequency drive (VFD) to control panel (CP):
   Field wire number/label: J-B/C-D
   B = Terminal number within starter or variable frequency drive (manufacturer's standard terminal number)
   C = Process control module number without hyphen (VCP#)
   D = Either the PLC address if the field terminal is connected directly to a PLC input or output point or the terminal number with a "C" prefix if not connected directly to a PLC I/O point (C0010)
   J = Starter or variable frequency drive tag and loop number without hyphen (MMS#)

   Examples: MMS#-10/CP#-I:1:01/01
   MMS#-10/CP#-O:2:10/07
   MMS#-10/CP#-C0010

9. **Case 7**: Field bus trunk segment:
   Field cable number/label: C/K-L/M; C/K-L/H; C/K-L/J
   C = Control Panel without hyphen (CP#).
   K = Field bus cable type.
   L = Field bus segment number.
   M = Field Bus field network component without hyphen (PTB1) or
   H = Equipment tag and loop number without hyphen (EMV#) or
   J = Starter or variable frequency drive tag and loop number without hyphen (VFD60.0112)

   Examples: CP#/PA-1A/PTB1PTB1/PA-1B/PTB2
   CP#/DN-1A/VFD#
   CP#/DP-2A/ EMV#

10. **Case 8**: Field bus spur (drop):
    Field cable number/label: E/K-L/M
    E = Field mounted instrument tag and loop numbers without hyphen (FIT#)
    K = Field bus cable type.
    L = Field bus segment number
    M = Field bus field network component without hyphen (PTB1), identify ports on the device.

    Examples: FIT#/PA-1C/PTB1-1
    FIT#/PA-1D/PTB1-2

11. Identify all spare conductors as required for other field wires with an “S” prefix:

    Example: S MMS#-10/CP#-C011

1.05 SUBMITTALS

A. Furnish submittals as specified in Sections 01330 - Submittal Procedures and 16050 - Common Work Results for Electrical.

B. Product data:
   1. Nameplates:
      a. Color.
      b. Size:
         1) Outside dimensions.
         2) Lettering.
      c. Material.
      d. Mounting means.
   2. Nameplate schedule:
      a. Show exact wording for each nameplate.
      b. Include nameplate and letter sizes.
   3. Wire numbers:
      a. Manufacturer’s catalog data for wire labels and label printer.

C. Record documents:
   1. Update the conduit schedule to reflect the exact quantity of wire numbers including spares and destination points for all wires.

1.06 QUALITY ASSURANCE (NOT USED)

1.07 DELIVERY, STORAGE, AND HANDLING

A. As specified in Section 16050 - Common Work Results for Electrical.

1.08 PROJECT SITE CONDITIONS (NOT USED)

1.09 SEQUENCING (NOT USED)

1.10 SCHEDULING (NOT USED)

1.11 WARRANTY

A. As specified in Section 16050 - Common Work Results for Electrical.

1.12 SYSTEM START-UP

A. As specified in Section 16050 - Common Work Results for Electrical.

1.13 OWNER’S INSTRUCTIONS (NOT USED)

1.14 MAINTENANCE (NOT USED)

PART 2 PRODUCTS

2.01 MANUFACTURERS

A. Nameplates and signs:
  1. One of the following or equal:
    a. Brady.
    b. Seton.

B. Conductor and cable markers:
  1. Heat-shrinkable tubing:
    a. One of the following or equal:
      1) Brady
      2) Raychem.
      3) Thomas & Betts.
      4) Kroy.

C. Conduit and raceway markers:
  1. Stainless steel, one of the following or equal:
    a. Panduit: Pan Steel.

2.02 EXISTING PRODUCTS (NOT USED)

2.03 MATERIALS

A. Nameplates:
  1. Colors:
    a. Warning nameplates: White-center, red face.
    b. Other nameplates: Black-center, white face.
  2. Laminated plastic engraving stock:
    a. 3/32-inch thick material.
    b. 2-ply.
    c. With chamfered edges.
  3. Block style engraved characters of adequate size to be read easily from a distance of 6 feet:
    a. No characters smaller than 1/8-inch in height.

B. Signs:
  1. Automatic equipment and high voltage signs:
    a. Suitable for exterior use.
    b. In accordance with OSHA regulations.

C. Conductor and cable markers:
  1. Machine printed black characters on white tubing.
  2. 10-point type or larger.

D. Conduit and raceway markers:
  1. Stainless steel:
    a. Type 304 or 316.
    b. 3/16-inch character height.

2.04 MANUFACTURED UNITS (NOT USED)

2.05 EQUIPMENT (NOT USED)

2.06 COMPONENTS (NOT USED)

2.07 ACCESSORIES (NOT USED)

2.08 MIXES (NOT USED)

2.09 FABRICATION (NOT USED)

2.10 FINISHES (NOT USED)

2.11 SOURCE QUALITY CONTROL

A. Nameplates:
   1. Provide all nameplates for control panel operator devices (e.g. pushbuttons, selector switches, pilot lights, etc.):
      a. Same material and same color and appearance as the device nameplates, in order to achieve an aesthetically consistent and coordinated system.

PART 3 EXECUTION

3.01 EXAMINATION (NOT USED)

3.02 PREPARATION (NOT USED)

3.03 INSTALLATION

A. As specified in Section 16050 - Common Work Results for Electrical.

B. Nameplates:
   1. Attach nameplates to equipment with rivets, bolts or sheet metal screws, approved waterproof epoxy-based cement or install in metal holders welded to the equipment.
   2. On NEMA Type 4, NEMA Type 4X, or NEMA Type 7 enclosures, use epoxy-based cement to attach nameplates.
   3. Nameplates shall be aligned and level or plumb to within 1/64 inch over the entire length:
      a. Misaligned or crooked nameplates shall be remounted or provide new enclosures at the discretion of the Engineer.

C. Conductor and cable markers:
   1. Apply all conductor and cable markers before termination.
   2. Heat-shrinkable tubing:
      a. Tubing shall be shrunk using a heat gun that produces low temperature heated air.
      b. Tubing shall be tight on the wire after it has been heated.
      c. Characters shall face the open panel and shall read from left to right or top to bottom.
      d. Marker shall start within 1/32 inch of the end of the stripped insulation point.

3. Conduit markers:
4. Furnish and install conduit markers for every conduit in the electrical system that is identified in the conduit schedule or part of the process system:
    a. Conduit markings shall match the conduit schedule.
5. Mark conduits at the following locations:
    a. Each end of conduits that are greater than 10 feet in length.
    b. The middle of conduits that are 10 feet or less in length.
    c. Where the conduit penetrates a wall or structure.
    d. Where the conduit emerges from the ground, slab, etc.
6. Mark conduits after the conduits have been fully painted.
7. Position conduit markers so that they are easily read from the floor.
8. Attach stainless steel tags with stainless steel cable ties.
9. Mark conduits before construction review by Engineer for punch list purposes.
10. Label intrinsically safe conduits in accordance with the requirements of the NEC.

D. Signs and labeling:
1. Furnish and install permanent warning signs at mechanical equipment that may be started automatically or from remote locations:
    a. Fasten warning signs with round head stainless steel screws or bolts.
    b. Locate and mount in a manner to be clearly legible to operations personnel.
2. Furnish and install permanent and conspicuous warning signs on equipment (front and back), doorways to equipment rooms, pull boxes, manholes, etc. where the voltage exceeds 600 volts.
3. Furnish and install warning signs on equipment that has more than one source of power.
    a. Warning signs to identify every panel and circuit number of the disconnecting means of all external power sources.
4. Place warning signs on equipment that has 120 VAC control voltage source used for interlocking.
    a. Identify panel and circuit number or conductor tag for control voltage source disconnecting means.

3.04 ERECTION, INSTALLATION, APPLICATION, CONSTRUCTION (NOT USED)

3.05 REPAIR/RESTORATION (NOT USED)

3.06 RE-INSTALLATION (NOT USED)

3.07 COMMISSIONING

A. As specified in Section 01756 - Commissioning.

3.08 FIELD QUALITY CONTROL

A. Replace any nameplates, signs, conductor markers, cable markers, or raceway labels that in the sole opinion of the Engineer do not meet the Engineer’s aesthetic requirements.

3.09 ADJUSTING (NOT USED)

3.10 CLEANING (NOT USED)

3.11 PROTECTION (NOT USED)

3.12 SCHEDULES (NOT USED)

END OF SECTION

THIS PAGE INTENTIONALLY LEFT BLANK

SECTION 16123

600-VOLT OR LESS WIRES AND CABLES

PART 1 GENERAL

1.01 SUMMARY

A. Section includes:
   1. 600-volt class or less wire and cable.

1.02 REFERENCES

A. As specified in Section 16050 - Common Work Results for Electrical.

B. ASTM International (ASTM):
   1. B3 - Standard Specification for Soft or Annealed Copper Wire.
   2. B8 - Standard Specification for Concentric-Lay-Stranded Copper Conductors, Hard, Medium-Hard, or Soft.

C. CSA International (CSA).

D. Insulated Cable Engineers Association (ICEA):
   1. NEMA WC 70/ICEA S-95-658-1999 - Standard for Nonshielded Power Cables Rated 2000 Volts or Less for the Distribution of Electrical Energy.
   2. NEMA WC 57/ICEA S-73-532 - Standard for Control, Thermocouple Extension, and Instrumentation Cables.

E. National Fire Protection Association (NFPA):
   1. 72 - National Fire Alarm and Signaling Code.
   2. 101 - Life Safety Code.

F. Telecommunications Industry Association/Electronics Industry Association (TIA/EIA):
   1. 568-C.2 - Balanced Twisted-Pair Telecommunication Cabling and Components Standard.

G. Underwriter's Laboratories Inc., (UL):
   1. 44 - Thermoset-Insulated Wires and Cables.
   2. 1277 - Standard for Electrical Power and Control Tray Cables with Optional Optical-Fiber Members.
   3. 1424 - Standard for Cables for Power-Limited Fire-Alarm Circuits.
   4. 1569 - Standard for Metal-Clad Cables.
   5. 2196 - Standard for Tests for Fire Resistive Cables.
   6. 2225 - Standard for Cables and Cable-Fittings for Use in Hazardous (Classified) Locations.

1.03 DEFINITIONS

A. As specified in Section 16050 - Common Work Results for Electrical.

B. Specific definitions and abbreviations:
   1. AWG: American wire gauge.
   2. BCCS: Bare copper-covered steel.
   3. CPE: Chlorinated polyethylene.
   4. FEP: Fluorinated ethylene propylene.
   5. FHDPE: Foam high-density polyethylene.
   6. FPE: Foam polyethylene.
   7. OD: Outside diameter.
   8. PVC: Polyvinyl chloride.
   9. XHHW: Cross-linked high heat water resistant insulated wire.

C. Definitions of terms and other electrical considerations as set forth in the:
   1. ASTM.
   2. ICEA.

1.04 SYSTEM DESCRIPTION

A. Furnish and install the complete wire and cable system.

1.05 SUBMITTALS

A. Furnish submittals as specified in Sections 01330 - Submittal Procedures and 16050 - Common Work Results for Electrical.

B. Product data:
   1. Manufacturer of wire and cable.
   2. Insulation:
      a. Type.
      b. Voltage class.
   3. AWG size.
   4. Conductor material.
   5. Pulling compounds.

C. Shop drawings:
   1. Show splice locations.
      a. For each proposed splice location provide written justification describing why the splice is necessary.

D. Test reports:
   1. Submit test reports for meg-ohm tests.

E. Calculations:
   1. Submit cable pulling calculations to the Engineer for review and comment for all cables that will be installed using mechanical pulling equipment. Show that the maximum cable tension and sidewall pressure will not exceed manufacturer recommended values:
      a. Provide a table showing the manufacturer’s recommended maximum cable tension and sidewall pressure for each cable type and size included in the calculations.
      b. Submit the calculations to the Engineer a minimum of 2 weeks before conduit installation.

1.06 QUALITY ASSURANCE

A. As specified in Section 16050 - Common Work Results for Electrical.

B. All wires and cables shall be UL listed and labeled.

1.07 DELIVERY, STORAGE, AND HANDLING

A. As specified in Section 16050 - Common Work Results for Electrical.

1.08 PROJECT OR SITE CONDITIONS (NOT USED)

1.09 SEQUENCING (NOT USED)

1.10 SCHEDULING (NOT USED)

1.11 WARRANTY

A. As specified in Section 16050 - Common Work Results for Electrical.

1.12 SYSTEM START-UP

A. As specified in Section 16050 - Common Work Results for Electrical.

1.13 OWNER`S INSTRUCTIONS (NOT USED)

1.14 MAINTENANCE (NOT USED)

PART 2 PRODUCTS

2.01 MANUFACTURERS

A. One of the following or equal:
  1. 600-volt class wire and cable:
     a. General Cable.
     b. Okonite Co.
     c. Southwire Co.
     d. Service Wire.
  2. Instrumentation class wire and cable:
     a. Belden.
     b. General Cable.
     c. Okonite Co.
     d. Alpha Wire.
  3. Network cables:
     a. Belden.
     b. General Cable.
     c. CommScope.

2.02 EXISTING PRODUCTS (NOT USED)

2.03 MATERIALS

A. Conductors:
  1. Copper in accordance with ASTM B3.

2.04 MANUFACTURED UNITS

A. General:
  1. Provide new wires and cables manufactured within 1 year of the date of delivery to the Site.
  2. Permanently mark each wire and cable with the following at 24-inch intervals:
    a. AWG size.
    b. Voltage rating.
    c. Insulation type.
    d. UL symbol.
    e. Month and year of manufacture.
    f. Manufacturer's name.
  3. Identify and mark wire and cable as specified in Section 16075 - Identification for Electrical Systems:
    a. Use integral color insulation for #2 AWG and smaller wire.
    b. Wrap colored tape around cable larger than #2 AWG.

B. 600-volt class wire and cable:
  1. Provide AWG or kcmil sizes as indicated on the Drawings or in the Conduit Schedules:
    a. When not indicated on the Drawings, size wire as follows:
      1) In accordance with the NEC:
        a) Use 75-degree Celsius ampacity ratings.
        b) Ampacity rating after all derating factors, equal to or greater than rating of the overcurrent device.
      2) Provide #12 AWG minimum for power conductors.
      3) Provide #14 AWG minimum for control conductors.
  2. Provide Class B stranding in accordance with ASTM B8:
    a. Provide Class C stranding where extra flexibility is required.
  3. Insulation:
    a. XHHW-2.
    b. 90-degree Celsius rating.
  4. Multiconductor cables:
    a. Number and size of conductors as indicated on the Drawings or in the Conduit Schedules.
    b. Individual conductors with XHHW-2 insulation.
    c. Overall PVC jacket.
    d. Tray cable rated.
    e. Color-coding for control wire in accordance with ICEA Method 1, E-2 in accordance with NEMA WC 57/ICEA S-73-532.
    f. Ground conductor: Insulated, green:
      1) Sized in accordance with NEC.

C. Instrumentation class cable:
  1. Type TC.
  2. Suitable for use in wet locations.
  3. Voltage rating: 600 volts.
  4. Temperature rating:
    a. 90-degree Celsius rating in dry locations.
    b. 75-degree Celsius rating in wet locations.
  5. Conductors:
    a. Insulation:
      1) Flame-retardant PVC, 15 mils nominal thickness, with nylon jacket 4 mils nominal thickness.
    b. #16 AWG stranded and tinned.
    c. Color code: ICEA Method 1:
      1) Pair: Black and white.
      2) Triad: Black, white and red.
      3) Multiple pairs or triads:
        a) Color-coded and numbered.
  6. Drain wire:
    a. #18 AWG.
    b. Stranded, tinned.
  7. Jacket:
    a. Flame retardant, moisture and sunlight resistant PVC.
    b. Ripcord laid longitudinally under jacket to facilitate removal.
  8. Shielding:
    a. Individual pair/triad:
      1) Minimum 1.35-mil double-faced aluminum foil-polyester tape overlapped to provide 100 percent coverage.
    b. Multiple pair or triad shielding:
      1) Group shield: Minimum 1.35-mil double-faced aluminum foil-polyester tape overlapped to provide 100 percent coverage.
      2) Completely isolate group shields from each other.
      3) Cable shield: 2.35 mils double-faced aluminum and synthetic polymer backed tape overlapped to provide 100 percent coverage.
    c. All shielding to be in contact with the drain wire.

D. Network cables:
  1. Category 6:
    a. General:
      1) Provide all Cat 6 cables meeting the standards set by TIA/EIA-568-C.2.
    b. Conductors:
      1) #24 AWG solid bare copper conductors.
    c. Insulation:
      1) Polyolefin.
      2) 4 non-bonded twisted pair cables formed into a cable core.
    d. Color code:
      1) Pair 1: White/blue stripe and blue.
      2) Pair 2: White/orange stripe and orange.
      3) Pair 3: White/green stripe and green.
      4) Pair 4: White/brown stripe and brown.
    e. Outer jacket:
      1) PVC with ripcord.

f. Electrical characteristics:
  1) Frequency range: 0.772-100 MHz.
  2) Attenuation: 32.1 dB/100 m.
  3) Near-end crosstalk (NEXT): 39.3 dB.
  4) Power sum NEXT: 37.3 dB.
  5) Attenuation to crosstalk ratio (ACR): 7.2 dB.
  6) Power sum attenuation to crosstalk ratio (PSACR): 5.3 dB/100 m.
  7) Equal level far end crosstalk (ELFEXT): 22.8 dB.
  8) Power sum ELFEXT: 19.8 dB/100 m.
  9) Return loss: 17.3 dB.
  10) Propagation delay: 537 ns/100 m.
  11) Delay skew: 45 ns/100 m.
  12) Propagation delay (skew), max: 2.5 ns/100 m.

2. RS-485 cable:
  a. 2-wire:
    1) Shielded twisted pair.
    2) Tinned copper conductors minimum with 7 by 30 stranding.
    3) #22 AWG.
    4) Insulation:
      a) FHDPE.
      b) 300-volt insulation level.
    5) Outer shield:
      a) 100 percent coverage.
      b) Tape/braid.
      c) Aluminum foil-polyester tape.
      d) Tinned copper braid.
    6) Outer shield drain wire:
      a) Tinned copper conductor minimum with 7 by 30 stranding.
      b) #22 AWG.
    7) Outer jacket PVC:
      a) Sunlight resistant.
    8) UL/CSA flame tested.
    9) Minimum bending radius 2.5 inches.
    10) Nominal OD 0.284 inch.
  b. 4-wire:
    1) Shielded twisted 2 pair.
    2) Tinned copper conductors minimum with 7 by 30 stranding.
    3) #22 AWG.
    4) Insulation:
      a) FHDPE.
      b) 300-volt insulation level.
    5) Outer shield:
      a) 100 percent coverage.
      b) Tape/braid.
      c) Aluminum foil-polyester tape.
      d) Tinned copper braid.
    6) Outer shield drain wire:
      a) Tinned copper conductor minimum with 7 by 30 stranding.
      b) #22 AWG.
    7) Outer jacket PVC.
      a) Sunlight resistant.
    8) UL/CSA flame tested.

        9) Minimum bending radius 3.6 inches.
        10) Nominal OD 0.356 inch.

2.05 EQUIPMENT (NOT USED)

2.06 COMPONENTS (NOT USED)

2.07 ACCESSORIES

A. Wire ties:
   1. One of the following or equal:
      a. T&B, "Ty-Rap" cable ties.
      b. Panduit, cable ties.

B. Wire markers:
   1. As specified in Section 16075 - Identification for Electrical Systems.

2.08 MIXES (NOT USED)

2.09 FABRICATION (NOT USED)

2.10 FINISHES (NOT USED)

2.11 SOURCE QUALITY CONTROL

A. Assembly and testing of cable shall comply with the applicable requirements of ICEA S-95-658-1999.

B. Test Type XHHW-2 in accordance with the requirements of UL 44.

PART 3 EXECUTION

3.01 EXAMINATION (NOT USED)

3.02 PREPARATION (NOT USED)

3.03 INSTALLATION

A. As specified in Section 16050 - Common Work Results for Electrical.

B. Color-coding:
   1. Color-coding shall be consistent throughout the facility.
   2. The following color code shall be followed for all 240/120 volt and 208/120 volt systems:
      a. Phase A: Black.
      b. Phase B: Red.
      c. Phase C: Blue.
      d. Single phase system: Black for 1 hot leg, red for the other.
      e. Neutral: White.
      f. High phase or wild leg: Orange.
      g. Equipment ground: Green.

3. The following color code shall be followed for all 480/277 volt systems:
    a. Phase A: Brown.
    b. Phase B: Orange.
    c. Phase C: Yellow.
    d. Neutral: Gray.
    e. Equipment ground: Green.
4. The following color code shall be followed for all 120 VAC control wiring:
    a. Power: Red.
    b. Neutral: White.
5. The following color code shall be followed for all general purpose DC control circuits:
    a. Grounded conductors: White with blue stripe.
    b. Ungrounded conductors: Blue.
6. Switch legs shall be violet. 3-way switch runners shall be pink.
7. Wires in intrinsically safe circuits shall be light blue.
8. Wire colors shall be implemented in the following methods:
    a. Wires manufactured of the desired color.
    b. Continuously spiral wrap the first 6 inches of the wire from the termination point with colored tape:
        1) Colored tape shall be wrapped to overlap 1/2 of the width of the tape.

C. Install conductors only after the conduit installation is complete, and all enclosures have been vacuumed clean, and the affected conduits have been swabbed clean and dry:
1. Install wires only in approved raceways.
2. Do not install wire:
    a. In incomplete conduit runs.
    b. Until after the concrete work and plastering is completed.

D. Properly coat wires and cables with pulling compound before pulling into conduits:
1. For all #4 AWG and larger, use an approved wire-pulling lubricant while cable is being installed in conduit:
    a. Ideal Products.
    b. Polywater Products.
    c. 3M Products.
    d. Greenlee Products.
    e. Or equal as recommended by cable manufacturer.
    f. Do not use oil, grease, or similar substances.

E. Cable pulling:
1. Prevent mechanical damage to conductors during installation.
2. For cables #1 AWG and smaller, install cables by hand.
3. For cables larger than #1 AWG, power pulling winches may be used if they have cable tension monitoring equipment.
4. Provide documentation that maximum cable pulling tension was no more than 75 percent of the maximum recommended level as published by the cable manufacturer. If exceeded, the Engineer may, at his discretion, require replacement of the cable.
5. Ensure cable pulling crews have all calculations and cable pulling limitations while pulling cable.

6. Make splices or add a junction box or pullbox where required to prevent cable pulling tension or sidewall pressure from exceeding 75 percent of manufacturer’s recommendation for the specified cable size:
    a. Make splices in manholes or pull boxes only.
    b. Leave sufficient slack to make proper connections.

F. Use smooth-rolling sheaves and rollers when pulling cable into cable tray to keep pulling tension and bending radius within manufacturer’s recommendations.

G. Install and terminate all wire in accordance with manufacturer's recommendations.

H. Neatly arrange and lace conductors in all switchboards, panelboards, pull boxes, and terminal cabinets by means of wire ties:
    1. Do not lace wires in gutter or panel channel.
    2. Install all wire ties with a flush cutting wire tie installation tool:
        a. Use a tool with an adjustable tension setting.
    3. Do not leave sharp edges on wire ties.

I. Terminate stranded conductors on equipment box lugs such that all conductor strands are confined within the lug:
    1. Use ring type lugs if box lugs are not available on the equipment.

J. Lighting circuits:
    1. Each circuit shall have a dedicated neutral.

K. Splices:
    1. Provide continuous circuits from origin to termination whenever possible:
        a. Obtain Engineer’s approval prior to making any splices.
    2. Lighting and receptacle circuit conductors may be spliced without prior approval from the Engineer.
    3. Where splices are necessary because of extremely long wire or cable lengths that exceed standard manufactured lengths:
        a. Splice box NEMA rating requirements as specified in Section 16050 - Common Work Results for Electrical.
        b. Make splices in labeled junction boxes for power conductors.
        c. Make splices for control and instrument conductors in terminal boxes:
            1) Provide terminal boards with setscrew pressure connectors, with spade or ring lug connectors.
    4. Power and control conductors routed in common raceways may be spliced in common junction boxes.
    5. Clearly label junction and terminal boxes containing splices with the word "SPLICE LOCATED WITHIN”.
    6. Leave sufficient slack at junction boxes and termination boxes to make proper splices and connections. Do not pull splices into conduits.
    7. Install splices with compression type butt splices and insulate using a heat-shrink sleeve:
        a. In NEMA Type 4 or NEMA Type 4X areas, provide heat-shrink sleeves that are listed for submersible applications.
    8. Splices in below grade pull boxes, in any box subject to flooding, and in wet areas shall be made waterproof using:
        a. A heat shrink insulating system listed for submersible applications.
        b. Or an epoxy resin splicing kit.

L. Apply wire markers to all wires at each end after being installed in the conduit and before meg-ohm testing and termination.

M. Instrumentation class cable:
   1. Install instrumentation class cables in separate raceway systems from power cables:
      a. Install instrument cable in metallic conduit within non-dedicated manholes or pull boxes.
      b. Install cable without splices between instruments or between field devices and instrument enclosures or panels.
   2. Do not make intermediate terminations, except in designated terminal boxes as indicated on the Drawings.
   3. Shield grounding requirements as specified in Section 16060 - Grounding and Bonding.

N. Network cables:
   1. Comply with TIA/EIA-568-C.2.
   2. Pathways:
      a. For initial installation, the maximum fill capacity for pathways (i.e. conduit, raceways, trays, baskets) is 40 percent. The maximum fill capacity of 60 percent is allowed to accommodate future additions after initial installation.
      b. Conduit should be run in the most direct route possible with no more than two 90-degree bends between pull boxes and serve no more than 3 outlet boxes.
   3. Cable bend radius:
      a. Proper cable bend radius control must be maintained throughout the pathways. The bend radius needs to be at a minimum 4 times the cable diameter.
   4. Cable pulling:
      a. Provide cable pulling swivel system to prevent winding and tangling of rope and cables during pull.
      b. The maximum pulling tension is not to exceed manufacturer recommendations. Cable installation should not in any way deform the cable jacket.
      c. Do not install bruised, kinked, scored, deformed, or abraded cable. Do not splice cable between termination, tap, or junction points. Remove and discard cable if damaged during installation and replace it with new cable.
   5. Cable management:
      a. Organize and manage cables for quick and easy moves, adds and changes.
   6. Testing:
      a. All cables and termination hardware shall be 100 percent tested for defects in installation and to verify cabling system performance under installed conditions according to the requirements of TIA/EIA-568-C.1 Section 11.
         1) All pairs of each installed cable shall be verified prior to system acceptance.
         2) Any defect in the cabling system installation including but not limited to cable, connectors, feed through couplers, patch panels, and connector blocks shall be repaired or replaced in order to ensure 100 percent useable conductors in all cables installed.

- b. All twisted-pair copper cable links shall be tested for compliance to the requirements in TIA/EIA/568-C.2 for the appropriate Category of cabling installed.
- c. All cables shall be tested in accordance with the contract documents, TIA/EIA standards, and best industry practice.
- d. The field test equipment shall meet the requirements of TIA/EIA-568-C. The appropriate level III tester shall be used to verify Category 6 cabling.
- e. Visually inspect UTP jacket materials for NRTL certification markings. Inspect cabling terminations in communications equipment rooms for compliance with color-coding for pin assignments and inspect cabling connections for compliance with TIA/EIA-568-C.1.
- f. Visually inspect cable placement, cable termination, grounding and bonding, equipment and labeling of all components.
- g. Test UTP copper cabling for DC loop resistance, shorts, opens, intermittent faults, and polarity between conductors.
  - 1) Test operation of shorting bars in connection blocks.
  - 2) Test cables after termination but not cross-connection.
    - a) Test instruments shall meet or exceed applicable requirements in TIA/EIA-568-C.2.
      - (1) Perform tests with a tester that complies with performance requirements in "Test Instruments (Normative)" Annex, complying with measurement accuracy specified in "Measurement Accuracy (Informative)" Annex.
      - (2) Use only test cords and adapters that are qualified by test equipment manufacturer for channel or link test configuration.

7. Separation from EMI sources:
   - a. Comply with TIA/EIA-569-B recommendations for separating unshielded copper voice and data communication cable from potential EMI sources, including electrical power lines and equipment.
   - b. Separation between open communications cables or cables in nonmetallic raceways and unshielded power conductors and electrical equipment shall be as follows:
     - 1) Electrical Equipment Rating Less Than 2 kVA: A minimum of 5 inches.
     - 2) Electrical Equipment Rating between 2 and 5 kVA: A minimum of 12 inches.
     - 3) Electrical Equipment Rating More Than 5 kVA: A minimum of 24 inches
   - c. Separation between communications cables in grounded metallic raceways and unshielded power lines or electrical equipment shall be as follows:
     - 1) Electrical Equipment Rating Less Than 2 kVA: A minimum of 2-1/2 inches.
     - 2) Electrical Equipment Rating between 2 and 5 kVA: A minimum of 6 inches.
     - 3) Electrical Equipment Rating More Than 5 kVA: A minimum of 12 inches.

        d. Separation between communications cables in grounded metallic raceways and power lines and electrical equipment located in grounded metallic conduits or enclosures shall be as follows:
            1) Electrical Equipment Rating Less Than 2 kVA: No requirement.
            2) Electrical Equipment Rating between 2 and 5 kVA: A minimum of 3 inches.
            3) Electrical Equipment Rating More Than 5 kVA: A minimum of 6 inches.
        e. Separation between Communications Cables and Electrical Motors and Transformers, 5 kVA or HP and Larger: A minimum of 48 inches.

O. Multi-conductor cable:
    1. Where cable is not routed in conduit with a separate ground conductor, use 1 conductor in the cable as a ground conductor:
        a) Use an internal ground conductor, if it is no smaller than as indicated on the Drawings and in accordance with NEC requirements for equipment ground conductor size.
        b) Where 2 parallel cables are used, and the internal ground conductor in each cable does not meet NEC requirements for the combined circuit, use 4-conductor cable, with one of the full-sized conductors serving as ground.

P. Signal cable:
    1. Separate and isolate electrical signal cables from sources of electrical noise and power cables by minimum 12 inches.

Q. Submersible cable in wet wells:
    1. Provide Kellem’s grip or stainless steel wire mesh to support cable weight and avoid stress on insulation.

R. Wiring allowances:
    1. Equipment locations may vary slightly from the drawings. Include an allowance for necessary conductors and terminations for motorized equipment, electrical outlets, fixtures, communication outlets, instruments, and devices within 10 linear feet of locations indicated on the Drawings.
    2. Locations for pull boxes, manholes, and duct banks may vary slightly from the drawings. Include an allowance for necessary conductors and related materials to provide conductors to all pull boxes, manholes and duct banks within 20 linear feet of locations indicated on the Drawings.

3.04 ERECTION, INSTALLATION, APPLICATION, CONSTRUCTION (NOT USED)

3.05 REPAIR/RESTORATION (NOT USED)

3.06 RE-INSTALLATION (NOT USED)

3.07 COMMISSIONING

A. As specified in Section 01756 - Commissioning.

3.08 FIELD QUALITY CONTROL

A. As specified in Section 16050 - Common Work Results for Electrical.

B. Grounding:
   1. As specified in Section 16060 - Grounding and Bonding.

3.09 ADJUSTING (NOT USED)

3.10 CLEANING (NOT USED)

3.11 PROTECTION

A. As specified in Section 16050 - Common Work Results for Electrical.

3.12 SCHEDULES (NOT USED)

END OF SECTION

THIS PAGE INTENTIONALLY LEFT BLANK

SECTION 16130

CONDUITS

PART 1 GENERAL

1.01 SUMMARY

A. Section includes:
   1. Metallic conduits.
   2. Nonmetallic conduits.
   3. Conduit bodies.
   4. Conduit fittings and accessories.
   5. Conduit installation.

1.02 REFERENCES

A. As specified in Section 16050 - Common Work Results for Electrical.

B. American National Standards Institute (ANSI):
   1. C80.1 - Electrical Rigid Steel Conduit.
   2. C80.3 - Steel Electrical Metallic Tubing.
   3. C80.5 - Electrical Rigid Aluminum Conduit.
   4. C80.6 - Electrical Intermediate Metal Conduit.

C. National Electrical Manufacturer's Association (NEMA):
   1. RN-1 - Polyvinyl Chloride (PVC) Externally Coated Galvanized Rigid Steel Conduit and Intermediate Steel Conduit.
   2. TC2 - Electrical Polyvinyl Chloride (PVC) Conduit.
   3. TC3 - Polyvinyl Chloride (PVC) Fittings for Use with Rigid PVC Conduit and Tubing.
   4. TC7 - Smooth-Wall Coilable Electrical Polyethylene Conduit.
   5. TC13 - Electrical Nonmetallic Tubing.
   6. TC14 - Reinforced Thermosetting Resin Conduit (RTRC) and Fittings.

D. Underwriters Laboratories (UL):
   1. 1 - Standard for Flexible Metal Conduit.
   2. 6 - Standard for Electrical Rigid Metal Conduit - Steel.
   3. 6A - Standard for Electrical Rigid Metal Conduit - Aluminum, Red Brass, and Stainless Steel.
   4. 360 - Standard for Liquidtight Flexible Steel Conduit.
   5. 651 - Standard for Schedule 40 and 80 Rigid PVC Conduit and Fittings.
   6. 651B - Standard for Continuous Length HDPE Conduit.
   7. 797 - Standard for Electrical Metallic Tubing - Steel.
   8. 1242 - Standard for Electrical Intermediate Metal Conduit - Steel.
   9. 1653 - Standard for Electrical Nonmetallic Tubing.
   10. 1660 - Standard for Liquidtight Flexible Nonmetallic Conduit.
   11. 1684 - Standard for Reinforced Thermosetting Resin Conduit (RTRC) and Fittings.

1.03 DEFINITIONS

A. As specified in Section 16050 - Common Work Results for Electrical.

B. Specific definitions and abbreviations:
   1. Conduit bodies: A separate portion of a conduit system that provides access through a removable cover to the interior of the system at a junction of 2 or more conduit sections. Includes, but not limited to, Shapes C, E, LB, T, X, etc.
   2. Conduit fitting: An accessory that primarily serves a mechanical purpose. Includes, but not limited to, bushings, locknuts, hubs, couplings, reducers, etc.
   3. PCA: Polyvinyl chloride (PVC) coated rigid aluminum conduit.
   4. EMT: Electrical metallic tubing.
   5. PVC: Polyvinyl chloride rigid nonmetallic conduit.
   6. SLT: Sealtight-liquidtight flexible conduit.
   7. RAC: Rigid aluminum conduit.
   8. NPT: National pipe thread.

1.04 SYSTEM DESCRIPTION

A. Provide conduits, conduit bodies, fittings, junction boxes, and all necessary components, whether or not indicated on the Drawings, as required, to install a complete electrical raceway system.

1.05 SUBMITTALS

A. Furnish submittals as specified in Sections 01330 - Submittal Procedures and 16050 - Common Work Results for Electrical.

B. Product data:
   1. Furnish complete manufacturer’s catalog sheets for every type and size of conduit, fitting, conduit body, and accessories to be used on the Project.
   2. Furnish complete manufacturer’s recommended special tools to be used for installation if required.
   3. Certified test results for PVC-coated metallic conduit showing the adhesive bond is stronger than the tensile strength of the PVC.

C. Certifications:
   1. Furnish PVC-coated conduit manufacturer’s certification for each installer.

D. Record Documents:
   1. Incorporate all changes in conduit routing on electrical plan drawings.

1.06 QUALITY ASSURANCE

A. As specified in Section 16050 - Common Work Results for Electrical.

B. All conduits, conduit bodies, and fittings shall be UL listed and labeled.

C. Every installer of PVC-coated metallic conduit shall be certified by the manufacturer for installation of the conduit.

1.07 DELIVERY, STORAGE, AND HANDLING

A. As specified in Section 16050 - Common Work Results for Electrical.

B. Do not expose non-metallic conduit to direct sunlight.

C. Do not store conduit in direct contact with the ground.

D. Do not store aluminum conduit in contact with concrete.

1.08 PROJECT OR SITE CONDITIONS

A. As specified in Section 16050 - Common Work Results for Electrical.

1.09 SEQUENCING

A. Before installing any conduit or locating any device box:
   1. Examine the complete set of Drawings and Specifications, and all applicable shop drawings.
   2. Verify all dimensions and space requirements and make any minor adjustments to the conduit system as required to avoid conflicts with the building structure, other equipment, or the work of other trades.

1.10 SCHEDULING (NOT USED)

1.11 WARRANTY

A. As specified in Section 16050 - Common Work Results for Electrical.

1.12 SYSTEM START-UP

A. As specified in Section 16050 - Common Work Results for Electrical.

1.13 OWNER'S INSTRUCTIONS (NOT USED)

1.14 MAINTENANCE (NOT USED)

PART 2 PRODUCTS

2.01 MANUFACTURERS

A. Electrical metallic tubing:
   1. One of the following or equal:
      a. Allied Tube and Conduit.
      b. Western Tube and Conduit.

B. Rigid aluminum conduit:
   1. One of the following or equal:
      a. Allied Tube and Conduit.
      b. Patriot Aluminum Products.
      c. Republic Conduit.
      d. Wheatland Tube Co.

C. PVC-coated aluminum conduit:
  1. One of the following or equal:
    a. Robroy Ind.
    b. Ocal, Inc.
    c. Calbond.

D. Sealtight-liquidtight flexible conduit:
  1. One of the following or equal:
    a. Southwire.
    b. AFC Cable Systems.
    c. Electri-Flex Co.
    d. Anaconda.

E. Rigid nonmetallic PVC conduit:
  1. One of the following or equal:
    a. Carlon.
    b. Cantex.
    c. Triangle Conduit and Cable.

F. Conduit bodies:
  1. One of the following or equal:
    a. Crouse-Hinds.
    b. Appleton.
    c. O-Z/Gedney.
    d. Ocal, Inc.
    e. Robroy Ind.
    f. Calbond.
    g. Carlon.

G. Joint compound:
  1. The following or equal:
    a. Thomas and Betts.

H. Conduit sleeve:
  1. One of the following or equal:
    a. Crouse-Hinds.
    b. Appleton.
    c. O-Z/Gedney.

I. Conduit hangers and supports:
  1. As specified in Section 16070 - Hangers and Supports.

J. Conduit through wall and floor seals:
  1. The following or equal:
    a. O-Z/Gedney:
      1) Type "WSK."
      2) Type “CSM.”

2.02 EXISTING PRODUCTS (NOT USED)

2.03 MATERIALS (NOT USED)

2.04 MANUFACTURED UNITS (NOT USED)

2.05 EQUIPMENT (NOT USED)

2.06 COMPONENTS

A. EMT:
  1. Hot-dip galvanized inside and out, and exterior chromated and lacquered:
    a. Electro-galvanizing is not acceptable.
  2. Organic corrosion-resistant ID coating.

B. RAC:
  1. Material:
    a. Extruded from 6063 Alloy in Temper Designation T-1.
    b. Maximum 1/10-percent copper content.
    c. Containing lubricating inside liners.
  2. NPT standard threads with a 3/4-inch taper per foot:
    a. Running conduit threads are not acceptable.
  3. Provide aluminum fittings and conduit bodies.

C. PCA:
  1. The aluminum conduit, before PVC coating, shall be new, unused, aluminum conduit and shall conform to the requirements for Type RAC.
  2. Factory-bonded PVC jacket:
    a. Nominal thickness of the exterior PVC coating shall be 0.040 inch except where part configuration or application of the piece dictates otherwise.
    b. PVC coating on conduits and associated fittings shall have no sags, blisters, lumps, or other surface defects and shall be free of holes and holidays.
  3. The PVC adhesive bond on conduits and fittings shall be greater than the tensile strength of the PVC plastic coating:
    a. Confirm bond with certified test results.
  4. A urethane coating shall be uniformly and consistently applied to the interior of all conduits and fittings:
    a. Nominal thickness of 0.002 inch.
    b. Conduits having areas with thin or no coating are not acceptable.
    c. All threads shall be coated with urethane.
  5. The PVC exterior and urethane interior coatings applied to the conduit shall afford sufficient flexibility to permit field bending without cracking or flaking at temperature above 30 degrees Fahrenheit (-1 degree Celsius).
  6. PCA conduit bodies and fittings:
    a. Copper-free cast aluminum.
    b. The conduit body, before PVC coating, shall be new, unused material and shall conform to appropriate UL standards.
    c. The PVC coating on the outside of conduit bodies shall be 0.040-inch thick and have a series of longitudinal ribs to protect the coating from tool damage during installation.
    d. 0.002-inch interior urethane coating.
    e. Utilize the PVC coating as an integral part of the gasket design.
    f. Stainless steel cover screw heads shall be encapsulated with plastic to ensure corrosion protection.

    - g. A PVC sleeve extending 1 conduit diameter or 2 inches, whichever is less, shall be formed at each female conduit opening.
        - 1) The inside diameter of the sleeve shall be the same as the outside diameter of the conduit to be used.
        - 2) The sleeve shall provide a vapor- and moisturetight seal at every connection.

D. SLT:
- 1. Temperature rated for use in the ambient temperature at the installed location but not less than the following:
    - a. General purpose:
        - 1) Temperature range: -20 degrees Celsius to +80 degrees Celsius.
    - b. Oil-resistant:
        - 1) Temperature range: -20 degrees Celsius to +60 degrees Celsius.
- 2. Sunlight-resistant, weatherproof, and watertight.
- 3. Manufactured from single strip steel, hot-dip galvanized on all 4 sides before conduit fabrication.
- 4. Strip steel spiral wound resulting in an interior that is smooth and clean for easy wire pulling.
- 5. Overall PVC jacket.
- 6. With integral copper ground wire, built in the core, in conduit trade sizes 1/2 inch through 1-1/4 inch.

E. PVC:
- 1. Extruded from virgin PVC compound:
    - a. Schedule 80 unless otherwise specified.
- 2. Rated for 90 degrees Celsius conductors or cable.
- 3. Rated for use in direct sunlight.

F. Conduit bodies:
- 1. Material consistent with conduit type:
    - a. Cast aluminum bodies and covers when used with Type RAC.
    - b. PVC bodies and covers when used with Type PVC.
    - c. PVC-coated copper-free cast aluminum bodies and covers when used with Type PCA.
    - d. Malleable iron or aluminum bodies with pressed steel or aluminum covers when used with Type EMT.
- 2. Conduit bodies to conform to Form 8, Mark 9, or Mogul design:
    - a. Mogul design conforming to NEC requirements for bending space for large conductors for conduit trade sizes of 1 inch and larger with conductors #4 AWG and larger, or where required for wire-bending space.
- 3. Gasketed covers attached to bodies with stainless steel screws secured to threaded holes in conduit body.

2.07 ACCESSORIES

A. Connectors and fittings:
- 1. Manufactured with compatible materials to the corresponding conduit.

B. Insulated throat metallic bushings:
- 1. Construction:
    - a. Aluminum when used with aluminum conduit.

    b. Positive metallic conduit end stop.
    c. Integrally molded non-combustible phenolic-insulated surfaces rated at 150 degrees Celsius.
    d. Use fully insulated bushings on nonmetallic conduit system made of high-impact 150 degrees Celsius rated non-combustible thermosetting phenolic.

C. Insulated grounding bushings:
  1. Construction:
    a. Malleable iron or steel, zinc-plated, with a positive metallic end stop.
    b. Integrally molded non-combustible phenolic-insulated surfaces rated at 150 degrees Celsius.
    c. Tin-plated copper grounding saddle for use with copper or aluminum conductors.

D. Electrical unions (Erickson Couplings):
  1. Construction:
    a. Aluminum for use with aluminum conduit.
    b. Concrete tight, 3-piece construction.
    c. Rated for Class I Division 1 Group D in hazardous areas.

E. SLT fittings:
  1. Construction:
    a. Malleable iron.
    b. Furnished with locknut and sealing ring.
    c. Liquidtight, raintight, oiltight.
    d. Insulated throat.
    e. Furnish as straight, 45-degree elbows, and 90-degree elbows.
    f. Designed to prevent sleeving:
      1) Verify complete bonding of the raceway jacket to the plastic gasket seal.
    g. Equipped with grounding device to provide ground continuity irrespective of raceway core construction. Grounding device, if inserted into raceway and directly in contact with conductors, shall have rolled-over edges for sizes under 5 inches.
    h. Where terminated into a threadless opening using a threaded hub fitting, a suitable moisture-resistant/oil-resistant synthetic rubber gasket shall be provided between the outside of the box or enclosure and the fitting shoulder. Gasket shall be adequately protected by and permanently bonded to a metallic retainer.
  2. Corrosion-resistant and outdoor SLT fittings:
    a. Construction:
      1) PVC-coated liquidtight fittings with a bonded 0.040-inch thick PVC coating on the metal connector to form a seal around the SLT conduit.
      2) Insulated throat and an integral sealing ring.

F. Hubs for threaded attachment of steel conduit to sheet metal enclosures:
  1. Construction:
    a. Insulated throat.
    b. PVC-coated when used in corrosive areas.
    c. Bonding locknut.

        d. Recessed neoprene O-ring to ensure watertight and dusttight connector.
        e. 1/2-inch through 1-1/4-inch steel zinc electroplated.
        f. 1-1/2-inch through 6-inch malleable iron zinc plated.
        g. Aluminum with aluminum conduit.
    2. Usage:
        a. All conduits in damp, wet, outdoor, and corrosive areas shall use threaded hubs for connections to sheet metal enclosures.

G. PVC fittings:
    1. Shall include the following:
        a. Couplings.
        b. Terminal adapters.
        c. Female adapters.
        d. Caps.
        e. Reducer bushings.
        f. Duct couplings.
        g. End bells.
        h. Expansion couplings.
        i. Duct couplings: 5 degree.
        j. C-Type pull fittings.
        k. E-Type pull fittings.
        l. LB-Type pull fittings.
        m. LL-Type pull fittings.
        n. LR-Type pull fittings.
        o. T-Type pull fittings.
        p. X-Type pull fittings.
        q. Service entrance caps.
    2. Materials:
        a. All devices shall be made of PVC, using the same materials as used for Type PVC conduit.
        b. All metal hardware shall be stainless steel.

H. Through wall and floor seals:
    1. Materials:
        a. Body: Casting of malleable or ductile iron with a hot-dip galvanized finish.
        b. Grommet: Neoprene.
        c. Pressure rings: PVC-coated steel.
        d. Disc material: PVC-coated steel.

I. Expansion/deflection couplings:
    1. Use to compensate for movement in any directions between 2 conduit ends where they connect.
    2. Shall allow movement of 3/4 inch from the normal in all directions.
    3. Shall allow angular movement for a deflection of 30 degrees from normal in any direction.
    4. Constructed to maintain electrical continuity of the conduit system.
    5. Materials:
        a. End couplings: Bronze or galvanized ductile iron.
        b. Sleeve: Neoprene.
        c. Bands: Stainless steel.
        d. Bonding jumper: Tinned copper braid.

J. Expansion couplings:
  1. Shall allow for expansion and contraction of conduit:
     a. Permitting 8-inch movement, 4 inches in either direction.
  2. Constructed to maintain electrical continuity of the conduit system.
  3. Materials:
     a. Head: Malleable or ductile iron.
     b. Sleeve: Steel.
     c. Insulating bushing: Phenolic.
     d. Finish: Hot-dip galvanized.
     e. Aluminum when used with Type RAC.

K. EMT connectors and couplings:
  1. Construction:
     a. Compression connectors and couplings shall be concrete-tight.
     b. All connectors shall have insulated throats.
     c. All connectors shall be compression-type.

L. Conduit markers:
  1. As specified in Section 16075 - Identification for Electrical Systems.

2.08 MIXES (NOT USED)

2.09 FABRICATION (NOT USED)

2.10 FINISHES (NOT USED)

2.11 SOURCE QUALITY CONTROL

A. As specified in Section 16050 - Common Work Results for Electrical.

PART 3 EXECUTION

3.01 EXAMINATION (NOT USED)

3.02 PREPARATION (NOT USED)

3.03 INSTALLATION

A. As specified in Section 16050 - Common Work Results for Electrical.

B. General:
  1. Conduit routing:
     a. The electrical drawings are diagrammatic in nature:
        1) Install conduit runs as specified with schematic representation indicated on the Drawings and as specified.
        2) Modify conduit runs to suit field conditions, as accepted by the Engineer:
           a) Make changes in conduit locations that are consistent with the design intent but are dimensionally different, or routing to bypass obstructions.
           b) Make changes in conduit routing due to the relocation of equipment.

        3) The electrical drawings do not indicate all required junction boxes and pull boxes:
            a) Provide junction boxes and pull boxes to facilitate wire pulling as required:
                (1) To meet cable manufacturer's pulling tension requirements.
                (2) To limit total conduit bends between pull locations.
            b) Install junction boxes and pull boxes at locations acceptable to the Engineer.
    b. The Contractor is responsible for any deviations in general location, conduit size, routing, or changes to the conduit schedule without the express written approval or direction by the Engineer:
        1) The Engineer is the sole source in determining whether the change is constituted as a deviation:
        2) Perform any changes resulting in additional conduits, or extra work from such deviations.
        3) Incorporate any deviations on the Record Documents.

2. Use only tools recommended by the conduit manufacturer for assembling the conduit system.
3. Provide adequate clearances from high-temperature surfaces for all conduit runs. Provide minimum clearances as follows:
    a. Clearance of 6 inches from surfaces 113 degrees Fahrenheit to 149 degrees Fahrenheit.
    b. Clearance of 12 inches from surfaces greater than 149 degrees Fahrenheit.
    c. Keep conduits at least 6 inches from the coverings on hot water and steam pipes, 18 inches from the coverings on flues and breechings, and 12 inches from fuel lines and gas lines.
    d. Where it is necessary to route conduits close to high-temperature surfaces, provide a high-reflectance thermal barrier between the conduit and the surface.
4. Support conduit runs on water-bearing walls a minimum of 7/8-inch away from wall on an accepted preformed channel:
    a. Do not run conduits within water-bearing walls unless otherwise indicated on the Drawings.
5. Do not install 1-inch or larger conduits in or through structural members unless approved by the Engineer.
6. Run conduits exposed to view parallel with or at right angles to structural members, walls, or lines of the building:
    a. Install straight and true conduit runs with uniform and symmetrical elbows, offsets, and bends.
    b. Make changes in direction with long radius bends or with conduit bodies.
7. Install conduits with total conduit bends between pull locations less than or equal to 270 degrees.
8. Route all exposed conduits to preserve headroom, access space and work space, and to prevent tripping hazards and clearance problems:
    a. Install conduit runs so that runs do not interfere with proper and safe operation of equipment and do not block or interfere with ingress or egress, including equipment-removal hatches.
    b. Route conduits to avoid drains or other gravity lines. Where conflicts occur, relocate the conduit as required.

9. When installing conduits through existing slabs or walls, make provisions for locating any possible conflicting items where the conduit is to penetrate. Use tone signal or X-ray methods to make certain that no penetrations will be made into the existing conduits, piping, cables, post-tensioning cables, etc.
10. Plug conduits brought into pull boxes, manholes, handholes, and other openings until used to prevent entrance of moisture.
11. Install conduits through wall and floor seals where indicated on the Drawings.
12. For existing and new 2-inch and larger conduit runs, snake conduits with a conduit cleaner equipped with a cylindrical mandrel of a diameter not less than 85 percent of nominal diameter of the conduit:
    a. Remove and replace conduits through which mandrel will not pass.
13. Provide all sleeves and openings required for the passage of electrical raceways or cables even when these openings or sleeves are not specifically indicated on the Drawings.
14. Install complete conduit systems before conductors are installed.
15. Provide metallic conduits terminating in transformer, switchgear, motor control center, or other equipment conduit windows with grounding bushings and ground with a minimum No. 6 AWG ground wire.
16. Underground conduits:
    a. Install underground conduits, including conduit runs below slabs-on-grade in duct bank construction:
        1) As specified in Section 16133 - Duct Banks.
    b. Make underground conduit size transitions at handholes and manholes.
    c. Install spare conduits in underground duct banks towards top center of runs to allow for ease of installation of future cables as conduits enter underground manholes and handholes.
    d. Seal around conduit penetrations of below grade walls with a mechanical seal.

C. Lighting and receptacle conduits:
    1. Provide conduit runs for lighting and receptacle circuits, whether or not indicated on the Drawings:
    2. Install conduits in accordance with the requirements of this Section unless otherwise indicated.
    3. Minimum conduit size:
        a. 3/4-inch for exposed conduits.
        b. 1-inch for underground or in-slab conduits.
    4. Provide conduit materials for the installed location as specified in Section 16050 - Common Work Results for Electrical.

D. Conduit usage:
    1. Exposed conduits:
        a. Rigid conduit:
            1) Install the rigid conduit type for each location as specified in Section 16050 - Common Work Results for Electrical.
            2) Minimum size: 3/4-inch.
        b. Flexible conduit:
            1) Use flexible conduit for final connections between rigid conduit and motors, vibrating equipment, instruments, control equipment, or where required for equipment servicing:
                a) Use Type SLT.

        2) Minimum size: 3/4-inch:
            a) 1/2 when required for connection to instruments.
        3) Maximum length:
            a) Fixed equipment:

Conduit Trade Size	Flexible Conduit Length (inch)
3/4	18
1	18
1-1/4	18
1-1/2	18
2	36
2-1/2	36
3	36
3-1/2	38
4	40

            b) Removable instruments or hinged equipment:
                (1) As required to allow complete removal or full movement without disconnecting or stressing the conduit.

2. Concrete-encased and embedded conduits:
    a. Type PVC Schedule 80 and PVC-coated rigid metallic conduit as specified below:
        1) Use Type PCA in underground and embedded installation as follows:
            a) Stub-up and risers to grade floor or equipment from nonmetallic conduits.
            b) Entering and exiting underground or embedded conduit runs a minimum 12 inches above and below grade of finished floor.
            c) For any and all bends where the total deflection is greater than 45 degrees.
    b. Minimum size:
        1) 2-inch in duct banks unless otherwise indicated on the Drawings.
        2) 1-inch for in-slab conduits unless otherwise indicated on the Drawings.
3. PVC-coated rigid metallic conduit:
    a. Use specifically manufactured or machined threading dies to manufacturer’s specifications to accommodate the PVC jacket.
4. EMT:
    a. May be used when specified in Section 16050 - Common Work Results for Electrical.
    b. Provide supports spaced at minimum 5 feet on center and within 2 feet of each outlet box, junction box, pull box, cabinet, or other enclosure.
5. PVC:
    a. Conduit terminations shall be via threaded adapters into threaded hubs on the junction boxes or conduit bodies.
    b. Conduit terminations into boxes without threaded hubs shall utilize a threaded adapter and a flat neoprene washer on the outside of the box.
        1) Use a locknut on the inside of the box to tighten the adapter to the box.

c. Route conduit to afford it the maximum physical protection.
  1) If necessary, cover conduit to afford additional protection when it cannot be shielded by the structure or machinery frames.
    a) Use Schedule 80 where exposed runs may be subject to physical damage.

6. RAC:
  a. Do not use aluminum conduit below grade, cast in concrete, or on concrete or masonry in contact with earth.
  b. When installing RAC on concrete surfaces, mount the RAC on the channel so that only the channel is in contact with the concrete.
  c. When penetrating concrete walls and/or floors, use O-Z/Gedney rubber-gasketed through wall and floor seals so that the aluminum conduit is completely isolated from the concrete by the rubber seal material.

E. Conduit joints and bends:
  1. General:
    a. Where conduit is underground, under slabs on grade, exposed to the weather, or in NEMA Type 4 or NEMA Type 4X locations, make joints liquidtight.
    b. Keep bends and offsets in conduit runs to an absolute minimum.
    c. All bends shall be symmetrical.
    d. The following conduit systems shall use large-radius sweep elbows:
      1) Underground conduits.
      2) Conduits containing shielded cables.
      3) Conduits containing fiber optic cables.
    e. Provide large-radius factory-made bends for 1-1/4-inch trade size or larger.
    f. Make field bends with a radius of not less than the requirements found in the NEC:
      1) The minimum bending radius of the cable must be less than the radius of the conduit bend.
      2) Make all field bends with power bending equipment or manual benders specifically intended for the purpose:
        a) Make bends so that the conduit is not damaged and the internal diameter is not effectively reduced.
        b) For the serving utilities, make bends to meet their requirements.
    g. Replace all deformed, flattened, or kinked conduit.
  2. Threaded conduit:
    a. Cut threads on rigid metallic conduit with a standard conduit-cutting die that provides a 3/4-inch per foot taper and to a length such that all bare metal exposed by the threading operation is completely covered by the couplings or fittings used. In addition, cut the lengths of the thread such that all joints become secure and wrench-tight just preceding the point where the conduit ends would butt together in couplings or where conduit ends would butt into the ends or shoulders of other fittings.
    b. Thoroughly ream conduit after threads have been cut to remove burrs.
    c. Use bushings or conduit fittings at conduit terminations.
    d. On exposed conduits, repair scratches and other defects with galvanizing repair stick, Enterprise Galvanizing “Galvabar™,” or CRC “Zinc It.”

        e. Coat conduit threads with an approved electrically conductive sealant and corrosion inhibitor that is not harmful to the conductor insulation:
            1) Apply to the male threads and tighten joints securely.
            2) Clean excess sealant from exposed threads after assembly.
        f. Securely tighten all threaded connections.
        g. Any exposed threaded surfaces must be cleaned and coated with a galvanizing solution so that all exposed surfaces have a galvanized protective coating.
    3. PVC:
        a. Use approved solvent-weld cement specifically manufactured for the purpose. Spray-type cement is not allowed.
        b. Apply heat for bends so that conduit does not distort or discolor. Use a spring mandrel as required to ensure full inside diameter at all bends:
            1) Utilize a heater specifically for PVC conduit as recommended by the conduit manufacturer.

F. Conduit sealing and drainage:
    1. Conduit drainage and sealing other than required for hazardous and classified areas:
        a. Provide sealing and drainage in vertical drops of long (in excess of 20 feet), exterior, above-grade conduit runs at the points at which the conduit enters buildings, switchgear, control panels, lighting panelboards, and other similar enclosures.
        b. Provide seal fittings with drains in vertical drops directly above grade for exterior and above-grade conduit runs that are extended below grade.
        c. Provide conduit seals with drains in areas of high humidity and rapidly changing temperatures:
            1) Where portions of an interior raceway pass through walls, ceilings, or floors that separate adjacent areas having widely different temperatures.
        d. Provide conduit seals similar to O-Z/Gedney (Type CSM) on all conduits between corrosive and non-corrosive areas.
        e. Seal one end only of all underground conduits at highest point with O-Z/Gedney sealing (non-hazardous) filling, or equal.
    2. Install seals with drains at any location along conduit runs where moisture may condense or accumulate. This requirement includes, but is not limited to, the following locations: control panels, junction boxes, pullboxes, or low points of the conduit.

G. Conduit supports:
    1. General:
        a. Provide appropriate hangers, supports, fasteners, and seismic restraints to suit applications:
            1) As specified in Section 16070 - Hangers and Supports.
            2) Provide support materials consistent with the type of conduit being installed as specified in Section 16050 - Common Work Results for Electrical.
        b. Support conduit at the intervals required by the NEC.
        c. Perforated strap and plumber’s tape are not acceptable for conduit supports.

2. Finished areas:
    a. Above suspended ceilings:
        1) Support conduit on or from the structure. Do not support conduit from hanging wires or suspended ceiling grid.
    b. In steel-stud construction:
        1) Tie conduit at maximum 4-foot intervals with No. 16 gauge double-annealed galvanized wire or conduit clips so that conduit cannot move from vibration or other causes.
3. Conduit on concrete or masonry:
    a. Use 1-hole malleable iron straps with metallic or plastic expansion anchors and screws or support from preset inserts.
    b. Use preset inserts in concrete when possible.
    c. Use pipe spacers (clamp backs) in wet locations.
    d. On plaster or stucco, use 1-hole malleable iron straps with toggle bolts.
4. Conduit on metal decking:
    a. Use 1-hole malleable iron straps with 1-inch long cadmium-plated Type A panhead sheet-metal screws. Fully or partially hammer-driven screws are not acceptable.
5. Suspended conduit:
    a. Use malleable-iron factory-made split-hinged pipe rings with threaded suspension rods sized for the weight to be carried (minimum 3/8-inch diameter), Kindorf, or equal.
    b. For grouped conduits, construct racks with threaded rods and tiered angle iron or preformed channel cross members. Clamp each conduit individually to a cross member. Where rods are more than 2-feet long, provide rigid sway bracing.
6. Supports at structural steel members:
    a. Use beam clamps.
    b. Drilling or welding may be used only as specified or with approval of the Engineer.

H. Expansion or expansion/deflection fittings:
    1. General:
        a. Align expansion coupling with the conduit run to prevent binding.
        b. Follow manufacturer’s instructions to set the piston opening.
        c. Install expansion fittings across concrete expansion joints and at other locations where necessary to compensate for thermal or mechanical expansion and contraction.
        d. Furnish fittings of the same material as the conduit system.
    2. For metallic conduit, provide expansion or expansion/deflection couplings, as appropriate, where:
        a. Install expansion fittings a minimum of every 200 feet in straight conduit runs.

I. Empty conduits:
    1. Provide a polyethylene rope rated at 250 pounds tensile strength in each empty conduit more than 10 feet in length.
    2. Seal ends of all conduits with approved, manufactured conduit seals, caps, or plugs immediately after installation:
        a. Keep ends sealed until immediately before pulling conductors.

J. Miscellaneous:
   1. Provide electrical unions at all points of union between ends of rigid conduit systems that cannot otherwise be coupled:
      a. Running threads and threadless couplings are not allowed.
   2. Replace any conduits installed that the Engineer determines do not meet the requirements of this Specification.
   3. Provide conduit housekeeping curb around all embedded or below-grade conduits exiting or entering the slab, per the Typical Details.

3.04 ERECTION, INSTALLATION, APPLICATIONS, CONSTRUCTION (NOT USED)

3.05 REPAIR/RESTORATION (NOT USED)

3.06 RE-INSTALLATION (NOT USED)

3.07 COMMISSIONING

A. As specified in Section 01756 - Commissioning.

3.08 FIELD QUALITY CONTROL

A. As specified in Section 16050 - Common Work Results for Electrical.

3.09 ADJUSTING (NOT USED)

3.10 CLEANING (NOT USED)

3.11 PROTECTION

A. As specified in Section 16050 - Common Work Results for Electrical.

3.12 SCHEDULES (NOT USED)

END OF SECTION

SECTION 16133

DUCT BANKS

PART 1 GENERAL

1.01 SUMMARY

A. Section includes:
   1. Electrical underground duct banks.
   2. Duct bank installation requirements.

1.02 REFERENCES

A. As specified in Section 16050 - Common Work Results for Electrical.

1.03 DEFINITIONS

A. As specified in Section 16050 - Common Work Results for Electrical.

1.04 SYSTEM DESCRIPTION

A. Provide trenching, forming, spacers, conduit, marking tape, backfill, and compaction necessary for the complete installation of the duct banks.

B. Provide direct bury duct banks with compacted sand backfill for all conduits installed below grade, on the site, below structures, or in contact with the earth, unless otherwise indicated on the Drawings.

1.05 SUBMITTALS

A. Furnish submittals as specified in Sections 01330 - Submittal Procedures and 16050 - Common Work Results for Electrical.

B. Product data:
   1. PVC conduit spacers.
   2. Detectable underground marking tape.
   3. Pull line.

C. Provide applicable submittal documents as specified in:
   1. Section 02318 - Trenching.
   2. Section 03200 - Concrete Reinforcing.
   3. Section 03300 - Cast-In-Place Concrete.

D. Shop drawings:
   1. Submit site plan drawings of duct banks including underground profiles indicating all underground utilities.

1.06 QUALITY ASSURANCE

A. As specified in Section 16050 - Common Work Results for Electrical.

1.07 DELIVERY, STORAGE, AND HANDLING

A. As specified in Section 16050 - Common Work Results for Electrical.

1.08 PROJECT OR SITE CONDITIONS

A. As specified in Section 16050 - Common Work Results for Electrical.

B. Field conditions and related requirements:
   1. Underground water table may be near or above the location of new duct banks.
   2. Include cost for necessary dewatering, and cleaning equipment to perform work in underground duct banks, pullboxes, and manholes before installation.

1.09 SEQUENCING (NOT USED)

1.10 SCHEDULING (NOT USED)

1.11 WARRANTY

A. As specified in Section 16050 - Common Work Results for Electrical.

1.12 SYSTEM START-UP

A. As specified in Section 16050 - Common Work Results for Electrical.

1.13 OWNER'S INSTRUCTIONS (NOT USED)

1.14 MAINTENANCE (NOT USED)

PART 2 PRODUCTS

2.01 MANUFACTURERS

A. Conduit spacers:
   1. One of the following or equal:
      a. Carlon Snap-Loc.
      b. Cantex.
      c. Osburn Associates, Inc.

B. Detectable underground marking tape:
   1. One of the following or equal:
      a. Blackburn Manufacturing Co.
      b. Pro-Line Safety Products.
      c. Panduit.

C. Pull line:
   1. One of the following or equal:
      a. Arnco.
      b. Greenlee.
      c. Osburn Associates, Inc.

2.02 EXISTING PRODUCTS (NOT USED)

2.03 MATERIALS

A. Provide conduit as specified in Section 16130 - Conduits:
   1. Use duct suitable for use with 90-degree Celsius rated conductors.

2.04 MANUFACTURED UNITS

A. Conduit spacers:
   1. Provide conduit spacers recommended by the conduit manufacturer or specified above.
   2. Saddle type.
   3. Non-metallic, non-corrosive, non-conductive.
   4. Interlocking type:
      a. Vertical interlocking.
      b. Horizontal interlocking.
   5. Suitable for concrete encasement.
   6. Molded-in rebar holder.
   7. Accommodates 2-inch through 6-inch conduit sizes.
   8. Relieves the conduit from both horizontal and vertical stresses.

B. Pull line:
   1. Minimum 1/4-inch wide, flat design.
   2. Polyester.
   3. Minimum pulling strength 1,200 pounds.

C. Detectable marking tape:
   1. Provide a detectable tape, locatable by a cable or metal detector from above the undisturbed grade.
   2. Aluminum core laminated between polyethylene film.
   3. 6-inch wide red tape imprinted with black lettering "CAUTION - BURIED ELECTRIC UTILITIES."

2.05 EQUIPMENT (NOT USED)

2.06 COMPONENTS (NOT USED)

2.07 ACCESSORIES (NOT USED)

2.08 MIXES (NOT USED)

2.09 FABRICATION (NOT USED)

2.10 FINISHES (NOT USED)

2.11 SOURCE QUALITY CONTROL (NOT USED)

PART 3 EXECUTION

3.01 EXAMINATION (NOT USED)

3.02 PREPARATION (NOT USED)

3.03 INSTALLATION

A. As specified in Section 16050 - Common Work Results for Electrical.

B. Duct banks:
  1. Install duct banks at least 24 inches below finished grade, unless otherwise indicated on the Drawings.
  2. Damage minimization:
     a. Conduit should not be left exposed in an open trench longer than is necessary.
     b. Protect all underground duct banks against damage during backfilling.
  3. All plastic conduit fittings to be joined should be exposed to the same temperature conditions for a reasonable length of time before assembly.
  4. Provide No. 4/0 American Wire Gauge bare copper ground wire the entire length of duct bank and bond to the grounding system at each end of the duct bank.
  5. Install underground ducts to be self-draining:
     a. Slope duct banks away from buildings to manholes, handholes, or pullboxes.
     b. Slope duct banks uniformly from manholes, handholes, or pullboxes to manholes, handholes, or pullboxes or both ways from high points between manholes, handholes, or pullboxes.
     c. Slope a minimum of 1/4 inch per 10 feet.
  6. Install pull line in spare conduits:
     a. Provide adequate pull line at both ends of conduits to facilitate conductor pulling.
     b. Cap above ground spare conduit risers at each end with screw-on conduit caps.

C. Trenching:
  1. Perform trenching as specified in Section 02318 - Trenching.
  2. Trench must be uniformly graded with the bottom, rock free and covered with select material.
  3. Avoid damaging existing ducts, conduits, cables, and other utilities.

D. Duct spacing:
  1. Separate conduits with manufactured plastic spacers using a minimum space between the outside surfaces of adjacent conduits of 2 inches, unless otherwise indicated on the Drawings:
  2. Install spacers to maintain uniform spacing of duct assembly a minimum of 4 inches above the bottom of the trench during backfill. Install spacers on 8-foot maximum intervals:
     a. Due to some distortion of conduit from heat, and other means, it may be necessary to install extra spacers within the duct bank:
        1) Install the intermediate set of spacers within normal required spacing to maintain the proper horizontal clearance:
           a) Clearance is required to allow the proper amount of backfill to infiltrate vertically among the duct to ensure proper protection.

3. Spacers shall not be located at the center of a bend:
    a. Locate spacer in the tangent, free of the coupling on fabricated bends.
    b. Locate spacers midway between the tangent and the center bend on trench formed sweeps.

E. Terminating:
  1. Use bell ends in duct at entrances into cable vaults.
  2. Make conduit entrances into cable vaults tangential to walls of cable vault.
  3. Form trapezoidal transitions between duct bank and cable vaults as needed in order to ensure adequate cable bending radius for the duct bank-to-vault transition.

F. Marking tape:
  1. Install a detectable marking tape 12 inches above the duct bank the entire length of the duct bank.

G. For conduit installations beneath building slabs:
  1. Duct banks shall be continued under building slabs to the final destination of the conduits.
    a. Construct separate duct banks as required.
    b. For duct banks crossing under building footers or foundations, install the top of the duct bank a minimum of 12 inches below the footer.
    c. Where duct banks enter through building walls, foundation walls, stem walls, etc. make connections as indicated on the Drawings.
    d. Where duct banks terminate with conduit risers entering building walls, install an expansion/deflection fitting or a flat-wise elbow (elbow parallel to building wall) in order to accommodate differential movement between the conduits and structure.

H. Restore all surfaces to their original condition, unless otherwise specified.

3.04 ERECTION, INSTALLATION, APPLICATION, CONSTRUCTION (NOT USED)

3.05 REPAIR/RESTORATION (NOT USED)

3.06 RE-INSTALLATION (NOT USED)

3.07 COMMISSIONING

A. As specified in Section 01756 - Commissioning.

3.08 FIELD QUALITY CONTROL

A. As specified in Section 16050 - Common Work Results for Electrical.

3.09 ADJUSTING (NOT USED)

3.10 CLEANING

A. Clean conduits of dirt and debris by use of an appropriately sized steel mandrel no less than 1/2 inch smaller than the inside diameter of the conduit.

3.11 PROTECTION

A. As specified in Section 16050 - Common Work Results for Electrical.

B. Provide shoring and pumping to protect the excavation and safety of workers.

C. Protect excavations with barricades as required by applicable safety regulations.

3.12 SCHEDULES (NOT USED)

END OF SECTION

SECTION 16134

BOXES

PART 1 GENERAL

1.01 SUMMARY

A. Section includes:
   1. Device boxes.
   2. Raceway system boxes.

1.02 REFERENCES

A. As specified in Section 16050 - Common Work Results for Electrical.

B. ASTM International (ASTM):
   1. A47 - Standard Specification for Ferritic Malleable Iron Castings.
   2. D149 - Standard Test Method for Dielectric Breakdown Voltage and Dielectric Strength of Solid Electrical Insulating Materials at Commercial Power Frequencies.
   3. D495 - Standard Test Method for High-Voltage, Low-Current, Dry Arc Resistance of Solid Electrical Insulation.
   4. D570 - Standard Test Method for Water Absorption of Plastics.
   5. D648 - Standard Test Method for Deflection Temperature of Plastics Under Flexural Load in the Edgewise Position.
   6. D790 - Standard Test Methods for Flexural Properties of Unreinforced and Reinforced Plastics and Electrical Insulating Materials.
   7. D792 - Standard Test Methods for Density and Specific Gravity (Relative Density) of Plastics by Displacement.

C. Joint Industry Conference (JIC).

D. Underwriters Laboratories, Inc. (UL):
   1. 94 - Standard for Tests for Flammability of Plastic Materials for Parts in Devices and Appliances.

1.03 DEFINITIONS

A. As specified in Section 16050 - Common Work Results for Electrical.

B. Specific definitions:
   1. Arcing parts: Circuit breakers, motor controllers, switches, fuses, or any device intended to interrupt current during its operation.
   2. Raceway system boxes: Boxes that are used for wire and cable pullboxes, conduit junction boxes, or terminal boxes.

1.04 SYSTEM DESCRIPTION

A. Provide outlet boxes for devices such as switches, receptacles, telephone and computer jacks, security systems, junction, and pullboxes for use in the raceway systems, etc.

B. Provide boxes as indicated on the Drawings or as needed to complete the raceway installation.

1.05 SUBMITTALS

A. Furnish submittals as specified in Sections 01330 - Submittal Procedures and 16050 - Common Work Results for Electrical.

B. Product data:
  1. Manufacturer.
  2. Materials.
  3. Dimensions:
    a. Height.
    b. Width.
    c. Depth.
    d. Weight.
    e. NEMA rating.
  4. Conduit entry locations.
  5. Catalog cut sheets.
  6. Installation instructions.

C. Shop drawings:
  1. Include identification and sizes of pullboxes.

1.06 QUALITY ASSURANCE

A. As specified in Section 16050 - Common Work Results for Electrical.

B. Regulatory requirements:
  1. Outlet boxes shall comply with all applicable standards of:
    a. JIC.
    b. NEC.
    c. NEMA.
    d. UL.

1.07 DELIVERY, STORAGE, AND HANDLING

A. As specified in Section 16050 - Common Work Results for Electrical.

1.08 PROJECT OR SITE CONDITIONS

A. As specified in Section 16050 - Common Work Results for Electrical.

1.09 SEQUENCING

A. As specified in Section 16050 - Common Work Results for Electrical.

1.10 SCHEDULING (NOT USED)

1.11 WARRANTY

A. As specified in Section 16050 - Common Work Results for Electrical.

1.12 SYSTEM START-UP

A. As specified in Section 16050 - Common Work Results for Electrical.

1.13 OWNER'S INSTRUCTIONS (NOT USED)

1.14 MAINTENANCE (NOT USED)

PART 2 PRODUCTS

2.01 MANUFACTURERS

A. One of the following or equal:
  1. Pressed steel boxes and concrete boxes:
    a. Steel City.
    b. Appleton.
    c. Crouse - Hinds.
    d. Thomas & Betts.
  2. Plastic coated boxes:
    a. Rob Roy.
    b. OCAL.
  3. Cast device boxes:
    a. Appleton.
    b. Crouse - Hinds.
    c. OZ/Gedney.
  4. Stainless steel enclosures:
    a. Hoffman.
    b. Stahlin.
    c. Rittal.

2.02 EXISTING PRODUCTS (NOT USED)

2.03 MATERIALS (NOT USED)

2.04 MANUFACTURED UNITS

A. Pressed steel boxes:
  1. 1-piece galvanized pressed steel.
  2. Knockout type boxes.
  3. Minimum size 4-inch square by 2-1/8-inch deep.

B. Concrete boxes:
  1. For outlets and pullboxes in concrete construction.
  2. Pressed steel or cast construction, concrete tight.
  3. Knockout sizes range from 1/2 inch to 1 inch.
  4. Depth as needed.

5. Types:
    a. Four-inch octagon.
    b. Four-inch octagon ceiling boxes with hanging bars.
    c. Gangable masonry boxes:
        1) 3-1/2-inch deep, 3-3/4-inch high, length as required:
            a) 2-1/2-inch deep boxes may be used where wall thickness precludes the use of the deeper boxes.
        2) With partitions as needed.

C. Cast device boxes:
1. Construction:
    a. With internal green ground screw.
    b. Furnished with a suitable gasketed cover.
    c. With integral cast mounting lugs when surface mounted.
    d. Conduit sizes range from 3/4 inch to 1 inch.
    e. Tapered threaded hubs with integral bushing.
2. Aluminum (copper free) boxes:
    a. High strength copper free 4/10 of 1 percent maximum alloy for use with aluminum rigid conduit.
3. Malleable iron boxes:
    a. Conforming to ASTM A47 Grade 32510.

D. Plastic coated cast device boxes:
1. Construction:
    a. With internal green ground screw.
    b. Furnished with a suitable gasketed cover.
    c. With integral cast mounting lugs when surface mounted.
    d. Conduit sizes range from 3/4 inch to 1 inch.
    e. Double coated with a nominal 0.002-inch (2 mil) urethane on both the interior and exterior before application of PVC coating.
    f. With a minimum 0.040-inch (40 mil) PVC coating bonded to exterior.
    g. With pressure sealing sleeve to protect the connection with conduit.

E. Formed stainless steel enclosures:
1. Stainless steel:
    a. NEMA Type 4X:
        1) Boxes in locations subject to flooding or temporary submersion:
            a) NEMA Type 6.
    b. Fabricated from 14-gauge Type 316 stainless steel.
    c. All seams continuously welded.
    d. Door:
        1) Rolled lip around 3 sides.
        2) Attached to enclosure by means of a continuous stainless steel hinge and pin.
    e. Neoprene door gasket to provide a watertight seal:
        1) Attached with an adhesive.
        2) Retained by a retaining strip.
    f. Fabricate all external removable hardware for clamping the door to the enclosure body from heavy gauge stainless steel:
        1) With a hasp and staple for padlocking.
    g. Provide large enclosures with door and body stiffeners for extra rigidity.

        h. No holes or knockouts.
        i. Finish:
            1) Brushed.
        j. Stainless steel external mounting brackets when surface mounted.

F. Cast iron junction boxes:
    1. NEMA Type 4.
    2. Recessed cover boxes.
    3. Suitable for use outdoors where subject to rain, dripping, or splashing water.
    4. Designed for flush mounting in walls or floors:
        a. Can be surface mounted using mounting lugs.
    5. Construction:
        a. Cast iron box.
        b. Covers:
            1) Checkered plate covers suitable for foot traffic.
            2) When used in areas subject to vehicular traffic H-20 loading.
        c. Hot dip galvanized.
        d. Neoprene gasket.
        e. Stainless steel screw covers.

2.05 EQUIPMENT (NOT USED)

2.06 COMPONENTS (NOT USED)

2.07 ACCESSORIES

A. Fasteners:
    1. Electroplated or stainless steel in boxes with wiring devices.
    2. Screws, nuts, bolts, and other threaded fasteners:
        a. Stainless steel.

B. Provide breather and drain fittings where appropriate.

C. Internal panels:
    1. Provide internal panels where required for mounting of terminal strips or other equipment.
    2. With plated steel shoulder studs.
    3. Steel with white polyester powder finish.

2.08 MIXES (NOT USED)

2.09 FABRICATION (NOT USED)

2.10 FINISHES (NOT USED)

2.11 SOURCE QUALITY CONTROL (NOT USED)

PART 3 EXECUTION

3.01 EXAMINATION (NOT USED)

3.02 PREPARATION (NOT USED)

3.03 INSTALLATION

A. As specified in Section 16050 - Common Work Results for Electrical.

B. General:
1. Provide materials and construction suitable for environmental conditions at the location of the box as specified in Section 16050 - Common Work Results for Electrical.
2. Provide outlet box materials to match the conduit system:
    a. EMT - Pressed metal boxes.
    b. RAC - Aluminum (copper free) boxes.
    c. PVC - PVC boxes.
    d. PCA - PVC coated aluminum boxes.
3. Solid type gang boxes:
    a. For more than 2 devices.
    b. For barriered outlets.
4. Support all wall mounted NEMA Type 4 or NEMA Type 4X boxes to maintain a minimum of 7/8-inch free air space between the back of the enclosure and the wall:
    a. Use machined spacers to maintain air space; built-up washers are not acceptable.
    b. Use stainless steel or nylon materials for spacers.
5. Use cast malleable iron boxes when box must support other devices.
6. Boxes serving luminaires or devices:
    a. Use as pullboxes wherever possible.
7. Fit all cast boxes and pressed steel boxes for flush mounting in concrete with cast, malleable box covers and gaskets.
8. In terminal boxes, furnish terminals as indicated on the Drawings, with a minimum of 50 percent spare terminals:
    a. Furnish wireways for discrete and analog/DC wiring.
    b. Separate analog wiring from 120 V discrete or power wiring.
9. Size boxes in accordance with NEC requirements and to provide sufficient room for the future components and cables indicated on the Drawings.
10. For fire-rated construction, provide materials and installation for use in accordance with the listing requirements of the classified construction.

C. Outlet boxes:
1. Locate outlet boxes as indicated on the Drawings:
    a. Adjust locations so as not to conflict with structural requirements or other trades.
2. Use deep threaded-hub malleable iron or aluminum boxes:
    a. Where exposed to the weather.
    b. In unheated areas.
    c. Where subject to mechanical damage:
        1) Defined as exposed boxes less than 10 feet above the floor.
    d. To act as a pullbox for conductors in a conduit system.

        - e. Accommodate wiring devices.
    3. Use deep threaded-hub plastic coated malleable iron boxes in corrosive and NEMA Type 4X area and when the conduit system is PVC coated steel.
    4. Outlet boxes may be used as junction boxes wherever possible.

D. Pullboxes and junction boxes:
    1. Size pullboxes in accordance with NEC requirements and to provide sufficient room for any future conduits and cables as indicated on the Drawings.
    2. Install pullboxes such that access to them is not restricted.

E. For boxes not indicated:
    1. Provide types and mountings as required to suit the equipment and that will be consistent with the conduit system and environmental conditions as indicated in Section 16050 - Common Work Results for Electrical.
    2. Outlet, switch, and junction boxes for flush-mounting in general purpose locations:
        a. One-piece, galvanized, pressed steel.
    3. Ceiling boxes for flush mounting in concrete:
        a. Deep, galvanized, pressed steel.
    4. Outlet, switch, and junction boxes where surface mounted in exposed locations:
        a. Cast ferrous boxes with mounting lugs, zinc or cadmium plating finish.
    5. Outlet, control station, and junction boxes for installation in corrosive locations:
        a. Fiberglass reinforced polyester, stainless steel, or plastic coated steel to match the conduit system.
        b. Furnished with mounting lugs.
    6. Recessed boxes in fire rated (2 hours maximum) bearing and nonbearing wood or steel stud walls (gypsum wallboard facings):
        a. Use listed single and double gang metallic outlet and switch boxes.
            1) The surface area of individual outlet or switch boxes shall not exceed 16 square inches.
        b. The aggregate surface area of the boxes shall not exceed 100 square inches per 100 square feet of wall surface.
        c. Securely fasten boxes to the studs:
            1) Verify that the opening in the wallboard facing is cut so that the clearance between the box and the wallboard does not exceed 1/8 inch.
        d. Separate boxes located on opposite sides of walls or partitions by a minimum horizontal distance of 24 inches.
            1) This minimum separation distance may be reduced when wall opening protective materials are installed according to the requirements of their classification.
        e. Use wall opening protective material in conjunction with boxes installed on opposite sides of walls or partitions of staggered stud construction in accordance with the classification requirements for the protective material.
    7. Fire rated construction: Use materials and methods to comply with the listing requirements for the classified construction.

F. Recessed boxes:
  1. Support recessed boxes in suspended ceilings or stud partitions with galvanized steel box hangers of types made specifically for the purpose or attach directly to wood members or blocking.
  2. Secure hangers or boxes to wood with 1-inch long cadmium-plated Type A pan head screws:
     a. Fully or partially hammer-driven screws are not acceptable.

3.04 ERECTION, INSTALLATION, APPLICATION, CONSTRUCTION (NOT USED)

3.05 REPAIR/RESTORATION (NOT USED)

3.06 REINSTALLATION (NOT USED)

3.07 COMMISSIONING

A. As specified in Section 01756 - Commissioning.

3.08 FIELD QUALITY CONTROL

A. As specified in Section 16050 - Common Work Results for Electrical.

3.09 ADJUSTING (NOT USED)

3.10 CLEANING

A. As specified in Section 16050 - Common Work Results for Electrical.

3.11 PROTECTION

A. As specified in Section 16050 - Common Work Results for Electrical.

3.12 SCHEDULES (NOT USED)

END OF SECTION

SECTION 16140

WIRING DEVICES

PART 1 GENERAL

1.01 SUMMARY

A. Section includes:
   1. Switches.
   2. Receptacles.
   3. Plates.

1.02 REFERENCES

A. As specified in Section 16050 - Common Work Results for Electrical.

B. Federal Specifications (FS):
   1. W-C 596 - Connector, Electrical, Power, General Specification for.
   2. W-S 896/2 - Switches, Toggle (Toggle and Lock), Flush Mounted (General Specification).

C. National Electrical Manufacturers Association (NEMA):
   1. WD1 - General Color Requirements for Wiring Devices.
   2. ICS 5 - Industrial Control and Systems, Control Circuit and Pilot Devices.
   3. OS1 - Sheet-Steel Outlet Boxes, Device Boxes, Covers and Box Supports.
   4. WD6 - Wiring Devices Dimensional Specifications.

D. Underwriters Laboratories, Inc. (UL):
   1. 20 - General Use Snap Switches.
   2. 498 - Standard for Attachment Plugs and Receptacles.
   3. 514D - Cover Plates for Flush-Mounted Wiring Devices.
   4. 943 - Ground-Fault Circuit-Interrupters.
   5. 1472 - Solid State Dimming Controls.

1.03 DEFINITIONS

A. As specified in Section 16050 - Common Work Results for Electrical.

B. Specific definitions:
   1. GFCI: Ground fault circuit interrupter.

1.04 SYSTEM DESCRIPTION

A. Switches, receptacles, and plates as indicated on the Drawings wired and operable to form a complete system.

1.05 SUBMITTALS

A. Furnish submittals as specified in Sections 01330 - Submittal Procedures and 16050 - Common Work Results for Electrical.

B. Product data:
   1. Catalog cut sheets.

C. Shop drawings:
   1. Engraving schedule:
      a. Furnish complete engraving schedule for engraved nameplates.

1.06 QUALITY ASSURANCE

A. As specified in Section 16050 - Common Work Results for Electrical.

B. Wiring devices shall be UL listed and labeled.

1.07 DELIVERY, STORAGE, AND HANDLING

A. As specified in Section 16050 - Common Work Results for Electrical.

1.08 PROJECT OR SITE CONDITIONS

A. As specified in Section 16050 - Common Work Results for Electrical.

1.09 SEQUENCING (NOT USED)

1.10 SCHEDULING (NOT USED)

1.11 WARRANTY

A. As specified in Section 16050 - Common Work Results for Electrical.

1.12 SYSTEM START-UP

A. As specified in Section 16050 - Common Work Results for Electrical.

1.13 OWNER'S INSTRUCTIONS (NOT USED)

1.14 MAINTENANCE (NOT USED)

PART 2 PRODUCTS

2.01 MANUFACTURERS

A. Switches:
   1. One of the following or equal:
      a. Hubbell.
      b. Pass and Seymour.
      c. Cooper Wiring Devices.
      d. Leviton.
   2. Occupancy sensor switches:
      a. One of the following or equal:
         1) WattStopper.
         2) Hubbell.

            3) Pass and Seymour.
            4) Cooper Wiring Devices.

B. Receptacles:
    1. General purpose receptacles:
        a. One of the following or equal:
            1) Hubbell.
            2) Pass and Seymour.
            3) Cooper Wiring Devices.
            4) Leviton

C. Plates:
    1. General location:
        a. One of the following or equal:
            1) Hubbell
            2) Pass and Seymour.
            3) Cooper Wiring Devices.
            4) Thomas and Betts.
    2. Wet or corrosive areas:
        a. One of the following or equal:
            1) Hubbell.
            2) Pass and Seymour.
            3) Cooper Wiring Devices.
            4) Thomas and Betts.
    3. In-use covers:
        a. One of the following or equal:
            1) Hubbell TayMac.
            2) Pass and Seymour.
            3) Cooper Wiring Devices.
            4) Thomas and Betts.

2.02 EXISTING PRODUCTS (NOT USED)

2.03 MATERIALS (NOT USED)

2.04 MANUFACTURED UNITS

A. Switches:
    1. General:
        a. 120-277 VAC.
        b. 20 amperes.
        c. Listed in accordance with UL 20.
        d. Designed and constructed in accordance with FS W-S-896/2.
        e. Back and side wired unless otherwise indicated.
        f. Integral grounding terminal.
        g. Totally enclosed:
            1) Color-coded body with color corresponding to ampere rating.
        h. Provide switches with the operator style and contact arrangement as indicated on the Drawings and as required for proper operation.
        i. Color:
            1) Ivory in finished areas.
            2) Brown in all other areas.

2. General purpose switches:
    a. Toggle type.
3. Switches for office areas:
    a. Rocker type.
    b. Rectangular.
4. Switches for use with photocell:
    a. Maintained contact.
    b. 2 circuit.
    c. 3 position:
        1) Center off.
5. Occupancy sensor switches:
    a. Wall switch with dual-technology passive infrared and ultrasonic sensor.
        1) Configured such that lights turn on only when both infrared and ultrasonic sensors detect activity, but do not turn off as long as either sensor detects activity.
    b. Selectable “automatic-on” mode activated by sensors or “manual-on” mode activated by pushbutton.
    c. Adjustable 5- to 30-minute time delay.
    d. Selectable audible alert as a warning before lights turn off.
    e. Rated for fluorescent lighting loads of up to 800W.
    f. True multi-way switching allowing identical controls at any location for multi-way switching applications.
6. Dimmer switches:
    a. Shall be rectangular design with LED light level indicators.
    b. Suitable for use with type of lamp switched.

B. Receptacles:
1. General purpose receptacles:
    a. Single or duplex as indicated on the Drawings.
    b. 125 VAC.
    c. 20 ampere or as indicated on the Drawings.
    d. NEMA Type 5-20R configuration for 20 ampere receptacles.
    e. Other NEMA configurations as indicated on the Drawings.
    f. Listed in accordance with UL 498.
    g. Designed and constructed in accordance with FS W-C-596.
    h. Back and side wired.
    i. 1-piece, rivet-less mounting strap.
    j. Color:
        1) Ivory in finished areas.
        2) Brown in all other areas.
        3) Orange when powered by a UPS.
2. Ground fault interrupter receptacles (GFCI):
    a. 125 VAC.
    b. 20 amperes.
    c. Trip level 4-6 milliamperes.
    d. Individual and feed through protection.
    e. UL 943 and UL 498 listed.
    f. NEMA Type 5-20R configuration.
    g. LED Trip Indicator Light.
    h. For damp or wet locations:
        1) Weather resistant, in accordance with UL 498.

C. Plates:
  1. General location:
    a. Type 302 or 304 stainless steel.
    b. Brushed satin finish.
    c. Minimum thickness: 0.032 inches.
    d. Rectangular or square shape.
    e. Engraving:
      1) Engrave each switch plate with the following:
        a) Area served.
        b) Panelboard and Circuit.
      2) Engrave each receptacle plate with the following:
        a) Panelboard and Circuit.
      3) Treat engraving to improve visibility.
      4) Characters shall be block letter pantograph engraved with a minimum character height of 1/8-inch.
    f. Coordinate the number of gangs, number, and type of openings with the specific location.
  2. Outdoor and wet areas requiring NEMA Type 4 or NEMA Type 4X enclosures:
    a. General:
      1) UL listed for wet locations.
      2) Gasketed.
      3) Die cast metal:
        a) Match material to box material.
    b. Switches:
      1) Lever operated:
        a) Provide toggle switch.
    c. Receptacles:
      1) Weatherproof in-use cover:
        a) Die cast metal construction with electrostatic powder coating for corrosion resistance.
        b) Gasketed.
        c) Lockable.
        d) UL listed and in accordance with NEC.
  3. Corrosive areas:
    a. Neoprene.
    b. Gasketed.
    c. Weatherproof.

D. Data and communications jacks:
  1. Network/phone jacks:
    a. Network jacks located in computer rooms shall be installed per the installation details indicated on the Drawings.
    b. Standard Decora wall plates shall be used with QuickPort modules and inserts.
    c. Plugs shall be color coded as indicated in the installation details indicated on the Drawings.
    d. Manufacturers: The following or equal:
      1) Hubbell.
      2) Leviton; Quickport series.

2.05 EQUIPMENT (NOT USED)

2.06 COMPONENTS (NOT USED)

2.07 ACCESSORIES (NOT USED)

2.08 MIXES (NOT USED)

2.09 FABRICATION (NOT USED)

2.10 FINISHES (NOT USED)

2.11 SOURCE QUALITY CONTROL (NOT USED)

PART 3 EXECUTION

3.01 EXAMINATION (NOT USED)

3.02 PREPARATION (NOT USED)

3.03 INSTALLATION

A. As specified in Section 16050 - Common Work Results for Electrical.

B. Mounting heights:
  1. Process and production areas:
    a. Switches and receptacles 48 inches from finished floor to top of plate.
  2. Offices and finished areas:
    a. Switches: 48 inches from finished floor to top of plate.
    b. Receptacles: 18 inches from finished floor to center of plate.

C. Receptacles:
  1. Provide GFCI receptacles as indicated on the Drawings.
    a. Provide weather resistant GFCI receptacles in all wet or damp areas.
      1) As specified in Section 16050 - Common Work Results for Electrical.
  2. Mount non-weatherproof receptacles vertically:
    a. Ground slot down.
  3. Mount weatherproof receptacles horizontally:
    a. Neutral slot up.

D. Ensure all plates make a firm seal with wall for recessed mounted devices:
  1. Outside edges of plates parallel with building lines.

3.04 ERECTION, INSTALLATION, APPLICATION, CONSTRUCTION (NOT USED)

3.05 REPAIR/RESTORATION (NOT USED)

3.06 REINSTALLATION (NOT USED)

3.07 COMMISSIONING

A. As specified in Section 01756 - Commissioning.

3.08 FIELD QUALITY CONTROL

A. As specified in Section 16050 - Common Work Results for Electrical.

3.09 ADJUSTING (NOT USED)

3.10 CLEANING (NOT USED)

3.11 PROTECTION

A. As specified in Section 16050 - Common Work Results for Electrical.

3.12 SCHEDULES (NOT USED)

END OF SECTION

THIS PAGE INTENTIONALLY LEFT BLANK

SECTION 16150

LOW VOLTAGE WIRE CONNECTIONS

PART 1 GENERAL

1.01 SUMMARY

A. Section includes:
   1. Wire connecting devices.
   2. Terminations.
   3. Splices.

1.02 REFERENCES

A. As specified in Section 16050 - Common Work Results for Electrical.

B. ASTM International (ASTM):
   1. D3005 - Standard Specification for Low-Temperature Resistant Vinyl Chloride Plastic Pressure-Sensitive Electrical Insulating Tape.

C. CSA International (CSA):
   1. C22.2 - No.197-M1983 (R2208) - PVC Insulating Tape.

D. Underwriters Laboratories, Inc. (UL):
   1. 510 - Standard for Polyvinyl Chloride, Polyethylene, and Rubber Insulating Tape.

1.03 DEFINITIONS

A. As specified in Section 16050 - Common Work Results for Electrical.

1.04 SYSTEM DESCRIPTION

A. Provide a complete system of wiring connectors, terminators, fittings, etc. for a complete wiring system suitable for the cables and conductors used.

1.05 SUBMITTALS

A. Furnish submittals as specified in Sections 01330 - Submittal Procedures and 16050 - Common Work Results for Electrical.

B. Product data:
   1. Catalog cut sheets.
   2. Installation instructions.

1.06 QUALITY ASSURANCE

A. As specified in Section 16050 - Common Work Results for Electrical.

B. All materials shall be UL listed.

1.07 DELIVERY, STORAGE, AND HANDLING

A. As specified in Section 16050 - Common Work Results for Electrical.

1.08 PROJECT OR SITE CONDITIONS

A. As specified in Section 16050 - Common Work Results for Electrical.

1.09 SEQUENCING (NOT USED)

1.10 SCHEDULING (NOT USED)

1.11 WARRANTY

A. As specified in Section 16050 - Common Work Results for Electrical.

1.12 SYSTEM START-UP

A. As specified in Section 16050 - Common Work Results for Electrical.

1.13 OWNER’S INSTRUCTIONS (NOT USED)

1.14 MAINTENANCE (NOT USED)

PART 2 PRODUCTS

2.01 MANUFACTURERS

A. Manufacturers for each type of technology are specified with the equipment in this Section.

2.02 EXISTING PRODUCTS (NOT USED)

2.03 MATERIALS (NOT USED)

2.04 MANUFACTURED UNITS (NOT USED)

2.05 EQUIPMENT

A. Control connections:
  1. Use insulated ring type wire terminators for connections to all screw terminals:
     a. With chamfered/funneled terminal barrel entry.
     b. Deep internal serrations.
     c. Long barrel design to reduce electrical resistance and increased insulator-barrel surface area to ensure that the insulator remains in contact with the barrel.
     d. Electroplated-tin copper conductor.
     e. Manufacturers: The following or equal:
        1) Thomas and Betts, Stakon.
  2. For process equipment connections work from manufacturer's drawings.

B. Joints, splices, taps, and connections:
   1. 600-volt conductors:
      a. Use solderless connectors.
      b. Use only plated copper alloy connectors or lugs:
         1) Aluminum connectors or lugs are not acceptable for copper conductors.
      c. Under those specific conditions where aluminum conductors have been allowed or are specified then the connectors for aluminum conductors shall be specifically designed for that purpose.
      d. For wire Number 10 AWG and smaller use compression splice caps, with insulating caps:
         1) Manufacturers: The following or equal:
            a) Buchanan, 2006S or 2011S, with 2007 or 2014 insulating caps.
      e. For wire Number 8 AWG and larger, use heavy duty copper compression connectors:
         1) Manufacturers: One of the following or equal:
            a) Burndy.
            b) Thomas and Betts.
      f. Heat shrink tubing:
         1) Suitable for indoors, outdoors, overhead, direct burial or submerged applications.
         2) Minimum shrink ratio: 4 to 1.
         3) Continuous operating temperature: -55 degrees Celsius to 110 degrees Celsius.
         4) Internally applied adhesive sealant.
         5) Cross-linked polyolefin:
            a) Manufacturers: One of the following or equal:
               (1) 3M, ITCSN.
               (2) Thomas & Betts, Shrink-Kon.
   2. Instrumentation class cable splices:
      a. Suitable for indoor, outdoors, weather exposed, direct buried, or submersed applications.
      b. Utilizing an epoxy, polyurethane, and re-enterable compounds.
      c. For use with shielded or unshielded plastic- and rubber-jacketed, signal, control, and power cables rated up to 1 kilovolt.
      d. Two-part mold body with tongue and groove seams and built in spacer webbing.
      e. Manufacturers: The following or equal:
         1) 3M, Scotchcast 72-N.

C. Insulating tape:
   1. General purpose insulating tape:
      a. Minimum 7 mil vinyl tape.
      b. Suitable for application in an ambient of -18 degrees Celsius (0 degrees Fahrenheit).
      c. Operating range up to 105 degrees Celsius (220 degrees Fahrenheit).
      d. Flame retardant, hot- and cold- weather resistant, UV resistant.
      e. For use as a primary insulation for wire cable splices up to 600 VAC.
      f. Meeting and complying with:
         1) ASTM D3005 Type I.
         2) UL 510.
         3) CSA C22.2.

        g. Manufacturers: The following or equal:
            1) 3M, Scotch Number Super 33+.
    2. General-purpose color-coding tape:
        a. Minimum 7 mil vinyl tape.
        b. Suitable for application on PVC and polyethylene jacketed cables.
        c. For use indoors and outdoors in weather protected enclosures.
        d. Available with the following colors:
            1) Red.
            2) Yellow.
            3) Blue.
            4) Brown.
            5) Gray.
            6) White.
            7) Green.
            8) Orange.
            9) Violet.
        e. For use as phase identification, marking, insulating, and harnessing.
        f. Meeting and complying with:
            1) UL 510.
            2) CSA C22.2.
        g. Manufacturers: The following or equal:
            1) 3M, Scotch Number 35.

2.06 COMPONENTS (NOT USED)

2.07 ACCESSORIES (NOT USED)

2.08 MIXES (NOT USED)

2.09 FABRICATION (NOT USED)

2.10 FINISHES (NOT USED)

2.11 SOURCE QUALITY CONTROL (NOT USED)

PART 3 EXECUTION

3.01 EXAMINATION (NOT USED)

3.02 PREPARATION (NOT USED)

3.03 INSTALLATION

A. As specified in Section 16050 - Common Work Results for Electrical.

B. Load connections:
    1. Connect loads to the circuits as indicated. Color-code all branch circuits as specified in Section 16123 - 600-Volt or Less Wires and Cables.

C. Zero to 600-volt systems:
   1. Make all connections with the proper tool and die as specified by the device manufacturer.
   2. Use only tooling and dies manufactured by the device manufacturer.
   3. Insulate all connections and splices with Scotch 33+ tape and Scotchfill, or pre-molded plastic covers, or heat shrink tubing and caps.
   4. Number all power and control wires before termination.

D. Motor connections (600 volts and below):
   1. Terminate all leads and wires with compression type ring lugs.
   2. Terminations on all motor leads, including leads that are connected together to accommodate the motor voltage, and the machine wires entering the motor terminal box from the power source, shall have ring type compression lugs.
   3. Cover bolted connectors with a heat shrinkable, cross-linked polyolefin material formed as a single opening boot:
      a. In damp and wet locations, use a complete kit containing mastic that shall seal out moisture and contamination.
      b. Shrink cap with low heat as recommended by manufacturer.
   4. Wire markers shall be readable after boot installation.
   5. Manufacturers: The following or equal:
      a. Raychem, MCK.

3.04 ERECTION, INSTALLATION, APPLICATION, CONSTRUCTION (NOT USED)

3.05 REPAIR/RESTORATION (NOT USED)

3.06 RE-INSTALLATION (NOT USED)

3.07 COMMISSIONING

A. As specified in Section 01756 - Commissioning.

3.08 FIELD QUALITY CONTROL

A. As specified in Section 16050 - Common Work Results for Electrical.

3.09 ADJUSTING (NOT USED)

3.10 CLEANING (NOT USED)

3.11 PROTECTION

A. As specified in Section 16050 - Common Work Results for Electrical.

3.12 SCHEDULES (NOT USED)

END OF SECTION

SECTION 16210

UTILITY COORDINATION

PART 1 GENERAL

1.01 SUMMARY

A. Section includes:
  1. Coordination with the utility companies to provide service.
  2. Contractor's responsibilities for connecting to utilities and providing utility service to the facilities.
  3. Descriptions of utility services required.

1.02 REFERENCES

A. As specified in Section 16050 - Common Work Results for Electrical.

1.03 DEFINITIONS

A. As specified in Section 16050 - Common Work Results for Electrical.

B. Electric utility contacts:
  1. For Gibson Oaks and Lake Gibson sites:
    a. Name: Wilfred Alvayero.
    b. Utility: Lakeland Electric.
    c. Address: 501 E. Lemon St., Lakeland, FL 33801.
    d. Phone number: 863-834-9535.
    e. E-mail: wilfred.alvayero@lakelandelectric.com.
  2. For Sherwood Lakes site:
    a. Name: Colin Knowles.
    b. Utility: Lakeland Electric.
    c. Address: 501 E. Lemon St., Lakeland, FL 33801.
    d. Phone number: 863-834-5851.
    e. E-mail: colin.knowles@lakelandgov.net.

1.04 SYSTEM DESCRIPTION

A. Electrical service:
  1. Provide all Work and materials and bear all costs for providing temporary construction power and the permanent electrical service, including but not limited to:
    a. All Work and materials not provided by the electric utility.
    b. All permits and fees required by the electric utility.
  2. Provide electrical ducts, raceways, conductors, and connections indicated on the Drawings, and all other Work and materials required for a complete electrical service, including but not limited to the following:
    a. Electrical service conduits and conductors from the point of electric utility connection to the service entrance equipment.

B. General:
   1. Coordinate and obtain inspections and final installation approval from the serving utilities and other authorities having jurisdiction.

1.05 SUBMITTALS

A. Furnish submittals as specified in Sections 01330 - Submittal Procedures and 16050 - Common Work Results for Electrical.

B. Certification:
   1. Submit certification that the intended installation has been coordinated with the utility companies.
   2. Include a narrative description of the utility's requirements and points of connection, names and telephone numbers for contacts at the utilities.

1.06 QUALITY ASSURANCE

A. As specified in Section 16050 - Common Work Results for Electrical.

B. Materials and equipment used in performance of Electrical Work shall be listed or labeled by UL, or other equivalent recognized independent testing laboratory, for the class of service intended.

1.07 DELIVERY, STORAGE, AND HANDLING (NOT USED)

1.08 PROJECT OR SITE CONDITIONS

A. As specified in Section 16050 - Common Work Results for Electrical.

1.09 SEQUENCING (NOT USED)

1.10 SCHEDULING

A. General:
   1. Before start of Site Work, make arrangements for temporary telephone and electrical service as required.

B. Electrical systems:
   1. Before bidding, the electrical contractor shall contact the utilities to determine the Work and materials that will be required from the Contractor, and all fees and permits that will be required, so that all utility systems furnished by the Contractor will be included in the bid.
   2. Coordinate Work with Engineer to minimize downtime of existing operating equipment and electrical distribution systems and to preclude unsafe operation:
      a. Notify Owner 10 days before power interruptions.
      b. Coordinate downtime with Owner and local electric utility.
   3. Before commencing Work, coordinate electric service entrance requirements with local electric utility to ensure that the installation will be complete as specified in these Contract Documents:
      a. Ensure power transformer size, electrical characteristics, and location are consistent with the design and service voltage provided by the electric utility coordinated with other trades.

   b. Arrange for utility revenue meter.
   c. Coordinate installation of metering CTs and PTs furnished by the electric utility.
   d. Pay any charges required by the electric utility for connection and turn-on.

C. Before commencing Site Work, coordinate underground conduit installations with other Work to eliminate conflicts and avoid interferences with other underground systems.

1.11 WARRANTY

A. As specified in Section 16050 - Common Work Results for Electrical.

1.12 SYSTEM START-UP

A. As specified in Section 16050 - Common Work Results for Electrical.

1.13 OWNER'S INSTRUCTIONS (NOT USED)

1.14 MAINTENANCE (NOT USED)

PART 2 PRODUCTS

2.01 MANUFACTURERS (NOT USED)

2.02 EXISTING PRODUCTS (NOT USED)

2.03 MATERIALS

A. Furnish materials in accordance with the applicable requirements of the utilities and as specified in these Specifications.

2.04 MANUFACTURED UNITS (NOT USED)

2.05 EQUIPMENT

A. Furnish equipment in accordance with the applicable requirements of the utilities and as specified in these Specifications.

2.06 COMPONENTS (NOT USED)

2.07 ACCESSORIES (NOT USED)

2.08 MIXES (NOT USED)

2.09 FABRICATION (NOT USED)

2.10 FINISHES (NOT USED)

2.11 SOURCE QUALITY CONTROL (NOT USED)

PART 3 EXECUTION

3.01 EXAMINATION (NOT USED)

3.02 PREPARATION (NOT USED)

3.03 INSTALLATION

A. As specified in Section 16050 - Common Work Results for Electrical.

3.04 ERECTION, INSTALLATION, APPLICATION, CONSTRUCTION (NOT USED)

3.05 REPAIR/RESTORATION (NOT USED)

3.06 RE-INSTALLATION (NOT USED)

3.07 COMMISSIONING

A. As specified in Section 01756 - Commissioning.

3.08 FIELD QUALITY CONTROL

A. As specified in Section 16050 - Common Work Results for Electrical.

3.09 ADJUSTING (NOT USED)

3.10 CLEANING

A. As specified in Section 16050 - Common Work Results for Electrical.

3.11 PROTECTION

A. As specified in Section 16050 - Common Work Results for Electrical.

3.12 SCHEDULES (NOT USED)

END OF SECTION

SECTION 16222

LOW VOLTAGE MOTORS UP TO 500 HORSEPOWER

PART 1 GENERAL

1.01 SUMMARY

A. Section includes:
   1. Low voltage motors up to 500 horsepower (hp).

1.02 REFERENCES

A. As specified in Section 16050 - Common Work Results for Electrical.

B. American Bearing Manufacturers Association (ABMA):
   1. 9 - Load Ratings and Fatigue Life for Ball Bearings.
   2. 11 - Load Ratings and Fatigue Life for Roller Bearings.

C. American Petroleum Institute (API):
   1. 670 - Vibration, Axial Position, and Bearing Temperature Monitoring Systems.

D. ASTM International (ASTM).
   1. B117 - Standard Practice for Operating Salt Spray (Fog) Apparatus.

E. Institute of Electrical and Electronic Engineers (IEEE):
   1. 43 - IEEE Recommended Practice for Testing Insulation Resistance of Rotating Machinery.
   2. 112 - IEEE Standard Test Procedure for Polyphase Induction Motors and Generators.
   3. 841 - IEEE Standard for Petroleum and Chemical Industry-Premium-Efficiency, Severe Duty, Totally Enclosed Fan-Cooled (TEFC) Squirrel Cage Induction Motors - Up to and Including 370 kW (500 hp).

F. National Electrical Manufacturers' Association (NEMA):
   1. MG-1 - Motors and Generators.
   2. MG-2 - Safety Standard for Construction and Guide for Selection, Installation, and Use of Electric Motors and Generators.

G. Underwriters Laboratories Inc. (UL):
   1. 674 - Electric Motors and Generators for Use in Division 1 Hazardous (Classified) Locations.

1.03 DEFINITIONS

A. As specified in Section 16050 - Common Work Results for Electrical.

1.04 SYSTEM DESCRIPTION

A. Furnish and install electric motors and accessories as specified in this Section and the Sections specifying driven equipment to provide a complete and operable installation.

1.05 SUBMITTALS

A. Furnish submittals as specified in Sections 01330 - Submittal Procedures and 16050 - Common Work Results for Electrical.

B. Submit completed motor data sheets for each motor supplied:
   1. Conform to data sheet in the appendix of this Section.
   2. Manufacturer’s or other data sheets are not acceptable.

C. Product data:
   1. Descriptive bulletins.
   2. Machine tag and loop number as indicated on the Drawings and in the specification section number of the driven machine.
   3. Complete electrical data.
   4. Motor nameplate data in accordance with NEMA MG 1.
   5. Torque, current, and power factor versus speed curves:
      a. At 100 percent rated voltage for all full voltage started and VFD-driven motors.
      b. For motors on reduced voltage start at 70, 80, 90, and 100 percent rated voltage.
   6. Accessories data:
      a. Power factor correction capacitors:
         1) Size in KVAR, for all motors not connected to variable frequency drives.
      b. Motor winding heaters:
         1) Voltage.
         2) Watts.
      c. Winding temperature detectors:
         1) Type.
         2) Rating.
      d. Moisture detectors.
   7. Mechanical data:
      a. Bearing design and bearing life calculations.
      b. Resonant frequencies for all VFD-driven motors 50 hp or greater.

D. Shop drawings:
   1. Motor weight.
   2. Frame size.
   3. Conduit box(es), size(s), and location(s).
   4. Outline drawings with dimensions.
   5. Installation details for the project seismic criteria.

E. Test reports:
   1. Factory test reports with test reference standard identified.

F. Certification:
   1. When motors are driven by variable speed drive systems, submit certification that selected motor:
      a. Is capable of satisfactory performance under the intended load.
      b. Meets the requirements of the latest edition of NEMA MG-1 Part 31.

G. Calculations:
   1. Where site conditions specified in Section 16050 - Common Work Results for Electrical exceed manufacturer's ratings, provide derating calculations for each motor.

1.06 QUALITY ASSURANCE

A. As specified in Section 16050 - Common Work Results for Electrical.

1.07 DELIVERY, STORAGE, AND HANDLING

A. As specified in Section 16050 - Common Work Results for Electrical.

B. Motors 200 hp and larger:
   1. Rotate shaft 90 degrees once per month.

1.08 PROJECT OR SITE CONDITIONS

A. As specified in Section 16050 - Common Work Results for Electrical.

1.09 SEQUENCING (NOT USED)

1.10 SCHEDULING (NOT USED)

1.11 WARRANTY

A. As specified in Section 16050 - Common Work Results for Electrical.

1.12 SYSTEM START-UP

A. As specified in Section 16050 - Common Work Results for Electrical.

1.13 OWNER'S INSTRUCTION (NOT USED)

1.14 MAINTENANCE (NOT USED)

PART 2 PRODUCTS

2.01 MANUFACTURERS

A. One of the following or equal:
   1. US Motors.
   2. General Electric.
   3. ABB / Baldor-Reliance.
   4. Toshiba.

2.02 EXISTING PRODUCTS (NOT USED)

2.03 MATERIALS (NOT USED)

2.04 MANUFACTURED UNITS (NOT USED)

2.05 EQUIPMENT

A. 3-phase induction motors - general:
  1. Voltage:
    a. All motors 1/2 hp and larger shall be rated 460 V, 3-phase unless otherwise indicated on the Drawings.
    b. Dual voltage motors rated 230/460 V, 3-phase are acceptable provided all leads are brought to the conduit box.
  2. Motors driving identical machines shall be identical.
  3. All motors greater than 1 hp and up to 500 hp shall meet the "NEMA Premium Efficiency" percent listed in NEMA MG-1.
  4. Horsepower as indicated on the Drawings:
    a. Horsepower ratings indicated on the Drawings are based on vendor’s estimates. Provide motors sized for the load of the actual equipment furnished without operating in the service factor.
  5. Service factor:
    a. 1.15 service factor on sine wave power.
    b. 1.0 when driven by VFD.
  6. Torque:
    a. Provide motors that develop sufficient torque for acceleration to full speed at voltage 10 percent less than motor nameplate rating.
    b. When started using reduced voltage starters:
      1) Provide motors that develop sufficient torque for acceleration to full speed.
    c. NEMA Design B except where driven load characteristics require other than normal starting torque:
      1) In no case shall starting torque or breakdown torque be less than the values specified in NEMA MG-1.
  7. Enclosures:
    a. As specified in the individual equipment Specifications or in this Section.
    b. Totally enclosed fan cooled:
      1) Cast iron conduit box.
      2) Tapped drain holes with Type 316 stainless steel plugs for frames 286 and smaller, and automatic breather and drain devices for frames 324 and larger.
    c. Lifting devices: All motors weighing 265 pounds (120 kilograms) or more shall have suitable lifting devices for installation and removal.
  8. Manufactured with cast iron frames in accordance with NEMA MG-1 or manufacturer’s standard material for the specified rating.
  9. Nameplates:
    a. Provide all motors with a permanent, stainless steel nameplate indelibly stamped or engraved with:
      1) NEMA standard motor data.
        a) Indicate compliance with NEMA MG-1 Part 31 for inverter duty motors.
      2) AFBMA bearing numbers and lubrication instructions.

10. Hardware:
    a. Type 316 stainless steel.
11. Conduit boxes:
    a. Cast iron or stamped steel.
    b. Split from top to bottom.
    c. Provide gaskets at the following interfaces:
        1) Frames and conduit boxes.
        2) Conduit boxes and box covers.
    d. Rotatable through 360 degrees in 90-degree increments.
        1) Where available based on the size of the conduit box.
    e. Exceeding the dimensions defined in NEMA MG-1.
    f. Provide grounding lugs inside conduit boxes for motor frame grounding.
12. Motor bearings:
    a. Antifriction.
    b. Regreasable and initially filled with grease for horizontal motors and vertical motors per manufacturer's standard design.
    c. Bearings and lubrication suitable for ambient temperature and temperature rise.
    d. Suitable for intended application and have ABMA L-10 rating life of 60,000 hours or more.
    e. Fit bearings with easily accessible grease supply, flush, drain, and relief fittings using extension tubes where necessary.
    f. Where specified in the equipment Specifications, provide split-sleeve type hydrodynamic radial bearings. Provide a bearing isolator to protect bearings from contaminants.
13. Insulation systems:
    a. Motors installed in ambient temperatures 40 degrees Celsius or less:
        1) Provide Class F insulation.
        2) Design temperature rise consistent with Class B insulation.
        3) Rated to operate at an ambient temperature of 40 degrees Celsius at the altitude where the motor will be installed.
    b. Motors installed in ambient temperatures between 40 degrees Celsius and 50 degrees Celsius:
        1) Provide Class F insulation.
        2) Design temperature rise consistent with Class B insulation.
        3) Rated to operate at an ambient temperature of 50 degrees Celsius at the altitude where the motor will be installed.
    c. Motors installed in ambient temperatures between 50 degrees Celsius and 65 degrees Celsius:
        1) Provide Class H insulation.
        2) Design temperature rise consistent with Class F insulation.
        3) Rated to operate at an ambient temperature of 65 degrees Celsius at the altitude where the motors will be installed.
14. Motor leads:
    a. Insulated leads with non-wicking, non-hydroscopic material. Class F insulation.
15. Noise:
    a. Maximum operating noise level in accordance with NEMA MG-1.

B. Vertical motors:
   1. Enclosures:
      a. Totally enclosed fan cooled (TEFC) for motors 200 hp and less installed outdoors.
      b. Weather protected Type I (WPI) where installed indoors.
   2. Thrust bearings:
      a. Selected for combined rotor and driven equipment loads.
      b. Coordinate with driven equipment supplier for maximum vertical thrust of driven equipment.
   3. Anti-reverse ratchet.

C. Motors driven by variable frequency drives:
   1. Compatible with the variable frequency drives specified.
   2. Inverter duty rated and labeled.
   3. Meet the requirements of NEMA MG-1 Part 31.
   4. Winding insulation meets the requirements of NEMA MG-1 Part 31.4.4.2.
   5. Capable of running continuously at 1/10th of full speed, with no harmful effects or overheating.
   6. Shaft grounding ring:
      a. Provide a shaft grounding ring for each VFD-driven motor.
      b. Aluminum frame and internal components.
      c. Conductive microfiber brushes.
      d. Maintenance free design.
      e. Aegis Bearing Protection ring as manufactured by Electro Static Technology or equal.
   7. On motors over 100 HP, provide insulated bearings on bearings on both ends of the motor or on the end opposite of the shaft ground ring as recommended by the motor manufacturer.

D. Motors installed in corrosive environments:
   1. Stator double dipped in varnish and baked.
   2. Stator and rotor coated with corrosion resistant epoxy.
   3. Frame, brackets, fan guard and conduit box coated with minimum of 2 coats of epoxy paint.
   4. Withstand salt spray tests in accordance with ASTM B117.

E. Single-phase motors:
   1. Capacitor start type rated for operation at 115 volts, 60 hertz, unless otherwise specified or as indicated on the Drawings.
   2. Totally enclosed fan cooled (TEFC) motors manufactured in accordance with NEMA MG 1.
   3. Ball bearings: Sealed.
   4. 1/2 hp or less fan motors:
      a. Split-phase or shaded pole type when standard for the equipment.
      b. Open type when suitably protected from moisture, dripping water, and lint accumulation.
   5. Wound rotor or commutator type single-phase motors only when their specific characteristics are necessary for application and their use is acceptable to the Engineer.
   6. Integral overload protection.

2.06 COMPONENTS (NOT USED)

2.07 ACCESSORIES

A. Motor winding heaters:
   1. Provide all 3-phase motors with belted or cartridge space heaters mounted within the motor enclosure.
   2. Space heater rating shall be 120 volts, single-phase, unless otherwise indicated on the Drawings.
   3. Power leads for heaters wired into conduit box.
   4. Installed within motor enclosure adjacent to core iron.

B. Winding temperature detectors:
   1. Provide factory installed winding temperature detector with leads terminating in the conduit box:
      a. Where required by the driven equipment Specification or as indicated on the Drawings.
      b. RTD type, 2 per phase, 100-ohm platinum.
   2. Temperature switches with normally closed contacts as indicated on the Drawings.

C. Vibration detectors:
   1. Where required by the driven equipment Specification.
   2. As specified in the driven equipment Specification.

2.08 MIXES (NOT USED)

2.09 FABRICATION (NOT USED)

2.10 FINISHES (NOT USED)

2.11 SOURCE QUALITY CONTROL (NOT USED)

PART 3 EXECUTION

3.01 EXAMINATION (NOT USED)

3.02 PREPARATION (NOT USED)

3.03 INSTALLATION

A. As specified in Section 16050 - Common Work Results for Electrical.

B. Install motors in accordance with manufacturer's instructions.

C. Install shaft grounding ring on VFD-driven motors in accordance with the manufacturer’s instructions.

3.04 ERECTION, INSTALLATION, APPLICATION, CONSTRUCTION (NOT USED)

3.05 REPAIR/RESTORATION (NOT USED)

3.06 RE-INSTALLATION (NOT USED)

3.07 COMMISSIONING AND PROCESS START-UP

A. As specified in Section 01756 - Commissioning.

B. Factory testing:
  1. Motors less than 250 hp:
    a. Perform manufacturer's standard production tests including but not limited to:
      1) No load current.
      2) High potential test.
      3) Winding resistance.
    b. Furnish copies of standard test reports on prototype or identical units.

3.08 FIELD QUALITY CONTROL

A. As specified in Section 16050 - Common Work Results for Electrical.

B. Before start-up, perform insulation resistance test on each motor furnished or installed on this project:
  1. Windings energized to 1,000 volts DC for 1 minute.
  2. Resistance measured at the end of the test, recorded, and submitted to the Engineer for review.
  3. Inform the Engineer of any unusual or unacceptable test results.
  4. This test is in addition to the acceptance tests in Section 16950 - Field Electrical Acceptance Tests.

3.09 ADJUSTING (NOT USED)

3.10 CLEANING (NOT USED)

3.11 PROTECTION

A. As specified in Section 16050 - Common Work Results for Electrical.

END OF SECTION

MOTOR DATA SHEET

MOTOR/ EQUIPMENT TAG ______________ MOTOR NUMBER ______________

SPECIFICATION NUMBER OF DRIVEN MACHINE ______________

MOTOR NAMEPLATE DATA

MANUFACTURER ______ MODEL/SERIES ______ MODEL NO. ______

FRAME ______ ENCLOSURE ______ NEMA DESIGN ______

HP ______ SERVICE FACTOR ______ RPM ______

INSULATION CLASS ______ VOLTS ______ FULL LOAD AMPS ______

AMBIENT TEMP ______ PHASE ______ NO LOAD AMPS ______

DESIGN TEMP ______ HERTZ ______ LOCK ROTOR AMPS ______

INRUSH CODE LETTER ______

	100% LOAD	75% LOAD	50% LOAD
GUARANTEED MINIMUM EFFICIENCIES:	______	______	______
GUARANTEED MINIMUM POWER FACTOR:	______	______	______

MAXIMUM SIZE OF POWER FACTOR CORRECTION CAPACITOR: ______ KVAR

ACCESSORIES

MOTOR WINDING HEATER ______ VOLTS ______ WATTS

WINDING THERMAL PROTECTION

WINDING TEMP SWITCHES (YES/NO) ______

RTD:

TYPE ______ QUANTITY PER PHASE ______ # OF WIRES ______

NOMINAL RESISTANCE ______ NOMINAL TEMP ______ COEFFICIENT ______

RECOMMENDED ALARM ______ DEGREES CELSIUS RECOMMENDED TRIP ______ DEGREES CELSIUS

SPECIAL APPLICATIONS

INVERTER DUTY* (YES/NO) ______ PART WINDING (YES/NO) ______ WYE - DELTA (YES/NO) ______

2 SPEED, 1 WINDING (YES/NO) ______ 2 SPEED, 2 WINDING (YES/NO) ______

AREA CLASSIFICATION:

CLASS ______ DIVISION ______ GROUP ______ TEMP CODE ______

* Conforms to NEMA MG-1 Part 31.

SECTION 16232

SINGLE DIESEL FUELED ENGINE GENERATOR ABOVE 200 KW

PART 1 GENERAL

1.01 SUMMARY

A. Section includes:
   1. Packaged automatic "standby" diesel engine generator systems.

1.02 REFERENCES

A. As specified in Section 16050 - Common Work Results for Electrical.

B. ASTM International (ASTM):
   1. A106 - Standard Specification for Seamless Carbon Steel Pipe for High-Temperature Service.

C. National Electrical Manufacturers Association (NEMA):
   1. 250 - Enclosures for Electrical Equipment (1,000 Volts Maximum).
   2. MG-1 - Motor and Generators.

D. National Fire Protection Association (NFPA):
   1. 30 - Flammable and Combustible Liquids Code.
   2. 37 - Standard for the Installation and Use of Stationary Combustion Engines and Gas Turbines.
   3. 110 - Standard for Emergency and Standby Power Systems.
   4. 820 - Standard for Fire Protection in Wastewater Treatment and Collection Facilities.

E. Underwriters Laboratories (UL):
   1. 142 - Standard for Steel Aboveground Tanks for Flammable and Combustible Liquids.
   2. 2200 - Standard for Stationary Engine Generator Assemblies.

1.03 DEFINITIONS

A. As specified in Section 16050 - Common Work Results for Electrical.

B. NEMA:
   1. Type 4X enclosure in accordance with NEMA 250.

C. Specific definitions:
   1. Standby rated duty: Continuous operation for the duration of any power outage of a utility power source.

1.04 SYSTEM DESCRIPTION

A. Provide a complete automatic diesel engine driven generator system, with all necessary components and accessories to make a complete and operating standby power supply.
   1. Coordinate the generator control system with the transfer equipment specified in the Electrical Specifications and as indicated on the Drawings.

B. Provide such minor details of electrical, plumbing, or mechanical work not specified or indicated on the Drawings, which are necessary for the successful operation of the diesel engine-driven generator required by these Specifications.

C. Description of operation:
   1. The standby emergency generator shall operate on loss of utility power to provide emergency backup power to the water plant. Upon loss of utility power detected by the automatic transfer switch (ATS), the ATS sends a start command to the generator and the generator starts. When generator power is detected, the ATS will switch to generator power and the base load that is uncontrolled will start. The plant process control system will sequence additional loads on and off in accordance with the process control descriptions.
   2. Upon restoration of utility power detected by the ATS, the ATS will switch back to utility power after a delay time set at the ATS and send a stop command to the standby generator. The standby generator will enter a cooldown mode initially set to 10 minutes and then shutoff.
   3. A test schedule set at the ATS or plant control PLC will initiate a weekly generator test. Operation from utility to generator and back to utility from generator will follow the same sequence.
   4. The plant control system PLC will have the ability to start and stop the generator and switch power from utility to generator and back to utility.

D. Step sequence (Gibson Oaks):
   1. Step 1:
      a. Base load: LP-1 and HVAC. LP-1 powers lighting systems, computer equipment, and miscellaneous small loads.
   2. Step 2:
      a. Jockey Pump 1 or 2.
   3. Step 3:
      a. Well Pump 1.
   4. Additional Steps:
      a. High service pumps 1-4(future) will be sequenced on and off based on the control system pressure control strategy.

E. Step sequence (Sherwood Lakes):
   1. Step 1:
      a. Base load: LP-91 and HVAC. LP-91 powers lighting systems, computer equipment, and miscellaneous small loads.
   2. Step 2:
      a. Well Pump 3 or 4 (well pumps operate in a duty/standby configuration).

1.05 SUBMITTALS

A. Furnish submittals as specified in Sections 01330 - Submittal Procedures and 16050 - Common Work Results for Electrical.

B. Product data:
  1. General:
    a. Manufacturer of:
      1) Engine.
      2) Generator.
      3) Governor.
      4) Voltage regulator.
      5) Generator control panel.
      6) Radiator.
      7) Battery charger.
      8) Batteries.
      9) Silencer.
      10) Enclosure.
      11) Fuel storage tank.
    b. Wet weight of engine generator system:
      1) List weight of fuel separately.
    c. Dimensions of engine generator system:
      1) Length.
      2) Width.
      3) Height.
    d. Type and grade of fuel recommended.
    e. Fuel oil consumption at:
      1) 50 percent load.
      2) 75 percent load.
      3) 100 percent load.
    f. Type and grade lubricating oil recommended.
    g. Amount of lubricating oil required per oil change.
    h. Normal lubricating oil consumption.
    i. Recommended lubricating oil change periods:
      1) By hours run.
      2) By time.
    j. Heat rejection by engine generator to the room area.
    k. Time interval from start-up contact closure until full load capabilities are available.
  2. Engine:
    a. Number of cylinders, bore, stroke, and piston speed.
    b. Displacement in cubic inches.
    c. Compression ratio.
    d. Engine RPM at 60 hertz.
    e. Combustion air required.
    f. Cooling air required.
    g. Size of exhaust outlet.
    h. Gauges.
    i. Jacket water heater:
      1) Rating.
      2) Voltage and phase requirements.
  3. Emissions:
    a. Certification of EPA compliance.
    b. Other exhaust emissions as required by the local air quality management district issuing the permit for the engine generator system.
    c. Reported at rated speed and load as measured by SAE J177 and J215 or ISO 8178 recommended practices.

4. Generator (alternator):
   a. Rated output:
      1) kW standby.
      2) Power factor.
      3) Voltage.
      4) Current.
   b. Number of poles.
   c. Number of leads and wires per lead.
   d. Pitch.
   e. Stator and field ratings including temperature rise at full and overload conditions.
   f. Insulation system:
      1) Insulation class.
      2) Stator rise.
      3) Rotor rise.
      4) Heat dissipated (kW).
      5) Air flow (m^3/min).
   g. Impedances (per unit and ohms):
      1) Synchronous reactance: Direct axis (X_d).
      2) Synchronous reactance: Quadrature axis (X_q).
      3) Transient reactance: Saturated (X'_d).
      4) Subtransient reactance: Direct axis (X''_d).
      5) Subtransient reactance: Quadrature axis (X''_q).
      6) Negative sequence reactance (X_2).
      7) Zero sequence reactance (X_0).
   h. Time constants:
      1) Open circuit transient: Direct axis.
      2) Short circuit transient: Direct axis.
      3) Open circuit subtransient: Direct axis.
      4) Short circuit Subtransient: Direct axis.
      5) Open circuit subtransient: Quadrature axis.
      6) Short circuit Subtransient: Quadrature axis.
      7) Exciter time constant.
      8) Armature short circuit.
   i. Short circuit ratio.
   j. Stator resistance.
   k. Field resistance.
   l. I^2t or K (heating time constant).
   m. Voltage and frequency variation and duration with the step application and removal of 25 percent, 50 percent, 75 percent, and 100 percent of resistive load maximum.
   n. Generator efficiency at:
      1) 25 percent load.
      2) 50 percent load.
      3) 75 percent load.
      4) 100 percent load.
   o. Generator output characteristic curves:
      1) Open circuit.
      2) Short circuit.
      3) Zero power factor.
      4) Air gap.
   p. Reactive capability curve.

        - q. Certified published engine horsepower curves showing manufacturer's engine rating for generator set standby and prime power application.
        - r. Decrement curve.
        - s. Thermal damage curve.
    - 5. Governor.
    - 6. Voltage regulator.
    - 7. Generator control panel:
        - a. Dimensions:
            - 1) Length.
            - 2) Width.
            - 3) Height.
            - 4) Weight.
        - b. Power requirements.
        - c. Controls.
        - d. NEMA enclosure rating.
    - 8. Space and ambient temperature requirements.
    - 9. Battery system:
        - a. Battery charger:
            - 1) Dimensions:
                - a) Length.
                - b) Width.
                - c) Height.
                - d) Weight.
            - 2) Input power requirements.
        - b. Batteries:
            - 1) Number.
            - 2) Dimensions:
                - a) Length.
                - b) Width.
                - c) Height.
                - d) Weight.
            - 3) Amount of electrolyte.
            - 4) Enclosure or rack.
    - 10. Silencer:
        - a. Grade.
        - b. Dimensions:
            - 1) Length.
            - 2) Width.
            - 3) Height.
            - 4) Weight.
    - 11. Free field mechanical noise level at 23 feet. Provide overall decibels (dBA) rating referenced at 20 μPa.
    - 12. Exhaust sound level in dBA at 5 feet from discharge end of silencer.
    - 13. Recommended spare parts and special tools lists, specifying quantity of each item.
    - 14. Weatherproof acoustical housing:
        - a. Dimensions:
            - 1) Length.
            - 2) Width.
            - 3) Height.
            - 4) Weight.
        - b. Materials.

        c. Acoustic rating.
        d. Door locations and access requirements.
        e. Finish.

C. Shop drawings:
    1. Provide detailed dimensional and to-scale layout drawings including:
        a. A single drawing incorporating all equipment furnished:
            1) Submittals that consist solely of individual drawings for each component and require that these sheets be compiled by the Engineer, in order to view the entire piece of equipment, are not acceptable.
        b. Conduit stub-out locations.
    2. Detailed electrical wiring diagrams of the engine and generator including:
        a. Engine interconnection terminal box.
        b. Generator interconnection terminal box.
        c. Fuel system.
        d. All interfaces between the engine driven generator skid and the transfer equipment.
        e. All wire numbers and terminal block identifications:
            1) Wire numbers are to correspond to the wire number on the equipment.
            2) All wires are to be numbered.
        f. Complete interior and exterior control panel layout:
            1) Scaled.
            2) With device descriptions.
            3) With nameplates.
    3. Piping connection and instrumentation diagrams.
    4. Mounting and installation drawings:
        a. Detailing mounting requirements for the Project Site seismic requirements as specified in Section 16050 - Common Work Results for Electrical.
        b. Prepared and sealed by a registered structural professional engineer in the state where the Project is being constructed.

D. Operation and maintenance manuals:
    1. Submit operating instructions and a maintenance manual presenting full details for care and maintenance of equipment of every nature furnished and/or installed under this Section.
    2. Operating manual:
        a. The manual must detail the operational functions of all normally used controls that have been placed on the front of the control equipment.
        b. Standard operational manuals normally furnished by the manufacturer.
    3. Maintenance manual:
        a. Printed and bound instructions covering all details pertaining to care and maintenance of all equipment as well as data identifying all parts.
        b. These manuals must include but are not limited to the following:
            1) Electrical controls:
                a) Adjustment and test instructions covering the steps involved in the initial test, adjustment, and start-up procedures.
                b) Detailed control instructions, which outline the purpose and operation of every control device used in normal operation.

            - c) Description of the sequence of operation that outlines the steps the controls follow during normal power failure and normal power return conditions.
            - d) All schematic, wiring, and external diagrams. Also, internal device wiring and schematic diagrams for all sub-assemblies used in the equipment:
                - (1) Drawing to be furnished in a reduced 11-inch by 17-inch format and shall be fully legible at that drawing size.
        - 2) Engine and generator:
            - a) Repair parts manuals normally furnished by the manufacturer.
                - (1) Detailing all parts and sub-assemblies, which are available as repair parts.
        - 3) Shop maintenance manuals:
            - a) Provide 1 shop manual on-site that is equivalent to the manual used by factory-authorized shop repair personnel.
            - b) Manuals for the following equipment:
                - (1) Engine.
                - (2) Radiator.
                - (3) Generator.
                - (4) Engine generator control panel.
    - c. Material safety data sheets:
        - 1) Complete MSDS forms for all substances.
        - 2) Located in O&M manual.
        - 3) Include separate manual labeled MSDS with additional copies of all MSDS forms.
- 4. Warranty data.
- 5. Maintenance Contract information (if applicable).

E. Test reports:
- 1. Furnish complete test reports as specified in this Section.

F. Certificates:
- 1. Certification of the emissions performance of the generator set engine by the engine manufacturer.
- 2. Certification that a torsional analysis between the engine and generator has been completed.
- 3. Seismic certification, as required.
- 4. Upon completion of installation, manufacturer must issue a certification of compliance with the Contract Documents.

G. Calculations:
- 1. Complete loading calculations to support the recommended size of the engine generator based upon actual facility loads and specified maximum allowable voltage drop.
- 2. Supply documentation identifying the maximum static pressure acceptable for the radiator fan. It is the manufacturer's responsibility to then provide calculations as part of the layout drawings, to ensure that the transition ductwork at the discharge of the radiator does not exceed the maximum static pressure acceptable for the radiator fan.

3. Submit exhaust system silencer noise attenuation curves.
4. Structural support system, mounting, and seismic calculations to be signed and stamped by a licensed structural professional engineer, registered in the state where the Project is located:
    a. Vibration isolator selection calculations.
    b. Vibration isolator anchoring calculations.
5. Submit factory certification of the radiator ambient capability.
6. Submit exhaust system pressure loss calculations:
    a. Include piping, fittings, silencer, and rain cap in loss calculations on indoor applications.

1.06 QUALITY ASSURANCE

A. As specified in Section 16050 - Common Work Results for Electrical.

B. Manufacturer qualifications:
1. The manufacturer of the engine, generator, and all major items of auxiliary equipment must be in current production of such equipment.
2. A factory authorized parts and service facility located within 100 miles of the Project Site.
3. Manufacturer is responsible for furnishing, testing, installation, supervising, testing, and guaranteeing the system.

C. Regulatory requirements:
1. In accordance with NFPA-110 Type 10 (ten second) transfer requirements.
2. Fuel tanks:
    a. UL listed.
    b. Primary and secondary tanks shall be tested under pressure per the manufacturer’s recommendation to check for leaks.
    c. Comply with the following, if applicable:
        1) NFPA 30 - Flammable and Combustible Liquids.
        2) NFPA 37 - Standard for Installation and Use of Stationary Combustible and Gas Turbines.
        3) NFPA 110 - Standard for Emergency and Standby Power Systems.
3. Regulations of the Fire Prevention Bureau of the fire department having jurisdiction.
4. Fire Code as specified by Florida Building Code.
5. Other applicable state and local codes.
6. EPA approved.
7. Requirements of local Air Quality Management District or Air Pollution Control District.
8. Comply with the Specifications that may be in excess of, and not contrary to, the regulations.

D. The generator set(s) shall be manufactured to the applicable specifications on file with UL and labeled with the UL 2200 mark.

1.07 DELIVERY, STORAGE, AND HANDLING

A. As specified in Section 16050 - Common Work Results for Electrical.

B. Furnish the generator skid with removable lifting and jacking angles, eye bolts, etc., attached to the structural base to facilitate unloading and move-in operations.

C. Provisions on skid for the use of "Multiton" type rollers for moving the generator skid into position and then removal of the "Multiton" rollers and then for setting the engine generator skid in place.

D. Provide the services of a manufacturer’s authorized representative to:
   1. Be present at the jobsite when the engine-driven generator arrives:
      a. Act as an advisor in assisting the Contractor regarding the unloading and move-in operations.
   2. Coordinate the delivery of the shipment with the Contractor.

1.08 PROJECT OR SITE CONDITIONS

A. As specified in Section 16050 - Common Work Results for Electrical.

1.09 SEQUENCING

A. Complete factory prototype and factory production tests in accordance with NFPA 110 before equipment is shipped.

1.10 SCHEDULING (NOT USED)

1.11 WARRANTY

A. As specified in Section 16050 - Common Work Results for Electrical.

1.12 SYSTEM START-UP

A. As specified in Section 16050 - Common Work Results for Electrical.

1.13 OWNER'S INSTRUCTIONS (NOT USED)

1.14 MAINTENANCE

A. Furnish the following spare parts:
   1. 3 sets of lube oil filters, fuel filters, and gaskets.
   2. 2 sets of air filters.
   3. 2 spare lamps of each different lamp type.
   4. 2 fuses (for each control circuit).
   5. 1 set of crankcase breather filters, when used.

B. Special tools: Furnish a set of specialty tools necessary for routine maintenance of the equipment.
   1. Special tools are those that only the manufacturer provides, for special purposes, or to reach otherwise inaccessible parts.

PART 2 PRODUCTS

2.01 MANUFACTURERS

A. The following list of manufacturers is a general guideline and makes no statement as to the capability of the manufacturer to meet the Specification requirements. The burden of proof of conformance with these Specifications lies with the Contractor and manufacturer. The Contractor must make special written application to use other than these named manufacturers:

1. Engine generators:
    a. One of the following or equal:
        1) Caterpillar.
        2) Cummins Power Generation.
        3) Kohler.
2. Governor:
    a. One of the following or equal:
        1) Woodward.
        2) Isochronous electronic by engine manufacturer.
3. Stand-alone fuel tank (Gibson Oaks):
    a. One of the following or equal:
        1) Convault.
        2) Modern Welding Co.
        3) Phoenix Products.
4. Base mounted fuel tank (Sherwood Lakes):
    a. One of the following or equal:
        1) Pryco.
        2) Tramont.
        3) Engine-generator manufacturer's equivalent.

B. Exhaust system:

1. One of the following or equal:
    a. Silencer:
        1) Silex Innovations.
        2) GTE Ind.
        3) Harco Manufacturing.
    b. Corrugated, flexible engine connector:
        1) DME.
        2) GTE Ind.
        3) Engine-generator manufacturer's equivalent.
    c. Expansion joint:
        1) DME, Inc.
        2) GTE Ind.
    d. Exhaust pipe insulation:
        1) As specified in Section 15050-Common Work Results for Mechanical.
    e. Expansion joint insulation:
        1) Pittsburgh-Corning/JPS Composite Materials Corp., Temp-Mat.

2.02 EXISTING PRODUCTS (NOT USED)

2.03 MATERIALS (NOT USED)

2.04 MANUFACTURED UNITS (NOT USED)

2.05 EQUIPMENT

A. Characteristics of assembled unit:
   1. The engine-driven generator consists of a diesel engine directly coupled to an electric generator providing electric power.
   2. The engine shall start, attain full speed, voltage, and assume full load within a maximum of 10 seconds, with jacket water at 85 degrees Fahrenheit.
   3. Furnish the engine-driven generator on a steel sub-base to support engine, generator, and accessories as a unit:
      a. Base: Welded construction.
      b. Engine direct connected through a flexible coupling to a single bearing generator.
      c. System free of injurious torsional and bending vibrations within a speed range from 10 percent below to 10 percent above synchronous speed.
      d. Engine-driven generator balanced such that the peak-to-peak amplitude of vibration velocity in any direction does not exceed the engine or generator manufacturer's published limits.
      e. If shims are required under the feet of the generator for alignment purposes, use 1-piece laminated shim stock that covers at least 90 percent of the foot.
      f. Provide a complete assembled engine-driven generator skid requiring only field electrical and mechanical connections.
   4. Connections to engine-driven generator skid:
      a. Flexible connections are required on all connections to the engine generator.
      b. These connections include but are not limited to:
         1) Exhaust.
         2) Fuel lines.
         3) Radiator discharge air ductwork.
      c. The length of all flexible connections to exceed the flexible connector manufacturer’s minimum length recommendations for the diameter used and for the misalignment as measured after installation.

B. Generator system performance requirements:
   1. Power output rating:
      a. Minimum kilowatts and voltage as indicated on the Drawings.
      b. 0.8 power factor.
      c. 3-phase, 4-wire, 60 hertz.
      d. In accordance with NEMA MG-1 temperature rise limits.
   2. It is the manufacturer's responsibility to properly size the engine generator based upon site conditions and actual loads:
      a. Allowable voltage drop: 10 percent.
      b. The Drawings and Specifications indicate a minimum size that the Engineer has determined based upon non-certified information.

        - c. No increase in Contract amount will be considered if the equipment size needs to be increased to meet the load requirements after bids have been submitted.
        - d. Provide all changes to the electrical system as required as a result of manufacturers sizing including but not limited to:
            - 1) Conduit.
            - 2) Wire: Provide Nehr-McGrath calculations to verify appropriate cable sizing in accordance with NEC when additional wire is required.
            - 3) Circuit breakers.
            - 4) Transfer equipment.
    - 3. Regulatory requirements:
        - a. Specifically designed to meet the discharge of gaseous pollutants to the atmosphere as required by the EPA statute and local agency issuing the permit for the engine generator system.

2.06 COMPONENTS

- A. Engine generator base:
    - 1. Support system:
        - a. Bolt the engine-driven generator to steel pads that are an integral part of structural support base.
        - b. Vibration isolators shall be provided with the engine-driven generator and be installed between the engine generator and structural support base or between the base and the floor:
            - 1) As recommended by the isolator manufacturer.
            - 2) Located for equal load distribution and deflection per isolator.
            - 3) Designed for the load and seismic conditions as identified for the site.

- B. Engine:
    - 1. Full compression ignition, 4-cycle, turbocharged, and aftercooled meeting the required emissions rating.
    - 2. The rated net horsepower of the engine with all accessories, including radiator fan, must not be less than that required to produce the minimum specified generator capacity at site altitude and maximum ambient temperature.
    - 3. Equipped and designed as follows:
        - a. Spin-on type replaceable lube oil filters.
        - b. Spin-on type replaceable fuel filters.
        - c. Heat treated forged steel crankshaft:
            - 1) Dynamically balanced.
        - d. Forged steel connecting rods.
        - e. Crankshaft driven gear type lubricating pump.
        - f. Electric fuel shut-off valve.
        - g. Engine air cleaner: Dry type replaceable filter.
        - h. 12- or 24-VDC positive engagement solenoid shift-starting motor:
            - 1) The starting equipment must include the necessary devices to prevent an overcrank and lockout if the starter pinion fails to engage the flywheel ring gear on the initial crank attempt.
            - 2) This starter disconnect shall electronically sense the speed of the flywheel and when the flywheel setpoint speed has been reached, the electronic control signals the starter disconnect to disengage.

        i. Oil level dip stick and oil drainpipe with valve and pipe plug:
            1) Oil drainpipe and valve are to extend 3 inches beyond edge of engine base.
        j. Engines requiring glow plugs are not acceptable.
        k. Crankcase breather filter for engines not equipped with EPA Tier certified engine's crankcase emissions control equipment:
            1) Provide crankcase ventilation system with coalescing filter/trap for blowby:
                a) Coalescing filter to be replaceable.
            2) If engine manufacturer recommends an open crankcase breather system, route outlet of breather filter to outside at 3 inches above grade and away from engine components:
                a) Provide on breather outlet Nelson "EcoVent" or equal, sized to match engine breather flow.
            3) If engine manufacturer recommends a closed crankcase breather system, provide integral crankcase pressure regulator with an automatic internal filter bypass and bypass indicator:
                a) Racor Model CCV 4500 or equal.

C. Governor:
    1. Isochronous type to maintain engine speed:
        a. Within 0.5 percent for steady state conditions.
        b. Within 5 percent for a no load to full load step with recovery to within 4 seconds of step load application.
        c. Suitable for use on diesel engines.
        d. Electronic governor control of fuel.
        e. Suitable for automatic, unattended starts.
        f. Speed sensing failure circuit to signal actuator to close if speed pick-up signal is lost.
        g. With speed pick-up sensor.
        h. With capabilities of local speed settings.
        i. Adjustable acceleration rate control from 0 to 8 seconds.
        j. Personnel guards over all exposed moving parts.
        k. Equipped with a continuous duty shutdown system for normal remote stopping.

D. Engine jacket water heater:
    1. Provide an in-line thermostat that disconnects power when coolant temperature exceeds the manufacturer's suggested setpoint.
    2. Contacts from an oil pressure switch or control panel contacts disconnect the heater power when the engine is running.
    3. Provided with shutoff valves and unions to allow heater replacement without draining the cooling system.
    4. Make all water heater connections with high temperature silicon type hoses and constant torque hose clamps.
    5. Size heater such that the engine block temperature is maintained at 85 degrees Fahrenheit at the specified minimum ambient temperature.
    6. Connect water heater and thermostat to the engine to minimize heated water circulation through the radiator circuit.
    7. Power supply:
        a. Water heaters smaller than 3,000 watts shall be 120 volts, 1-phase.
        b. Heaters 3,000 watts and larger shall be 460 volts, 1-phase.

E. Alternator (generator):
  1. Brushless synchronous alternator.
  2. Re-connectable 12 lead if available.
  3. Self-ventilated.
  4. Full amortisseur windings.
  5. 2/3 pitch windings, skewed for smooth voltage waveform.
  6. With permanent magnet generator pilot exciter.
  7. Drip-proof enclosure.
  8. Protected against corrosion.
  9. Single bearing design.
     a. Alternators over 2,000 kW may be 2 bearing design.
  10. Insulation:
      a. Insulated for continuous operation at 40 degrees Celsius ambient temperature.
      b. Class F (105 degrees Celsius rise by resistance) for medium voltage or Class H (125 degrees Celsius rise by resistance) for low voltage generators.
      c. Vacuum impregnated with epoxy varnish to be fungus resistant per MIL I-24092.
      d. Multiple dipped and baked with a non-hygroscopic varnish with a final dip of epoxy.
  11. Terminate alternator power leads using compression lugs on an insulator and bus bar system within the alternator junction box:
      a. These terminations must not require any taping to complete the connection.
      b. Provide a ground terminal inside the junction box to terminate the ground cables between the alternator to the automatic transfer equipment ground bus:
         1) Minimum size of the equipment-grounding conductor: 12-1/2 percent of the size of the phase conductors.
  12. 120 VAC integral alternator winding heaters.
  13. Maximum balanced telephone interference factor not to exceed 50.
  14. Designed to supply power to the non-linear loads as specified and as indicated on the Drawings:

F. Alternator digital voltage regulator:
  1. Located in the engine control panel.
  2. Performance requirements:
     a. Maintain the steady state voltage within 1 percent:
        1) From 40 degrees Fahrenheit to 120 degrees Fahrenheit.
        2) From no load to full load conditions.
  3. Constant volts per hertz characteristics with under frequency roll-off for better transient response.
  4. Static type.
  5. Sized to match the power requirements of the exciter circuit and power from the permanent magnet generator pilot exciter.
  6. Include manual control to adjust voltage drop, voltage level, and voltage gain.
  7. With 3-phase sensing.
  8. Sealed from the environment and isolated from the load to prevent tracking when connected to SCR loads.
  9. Include loss of sensing shutdown to protect the generator against uncontrolled voltage output when the sensing circuit to the regulator is opened.

10. Shut down regulator when the sensing circuit to the regulator does not have continuity.
11. Include over-excitation shutdown to protect the generator against thermal damage caused by prolonged field forcing.

G. Exhaust system:
   1. General:
      a. Provide a complete exhaust system following as indicated on the Drawings and as specified.
      b. Back pressure:
         1) Provide components such that the maximum back pressure in the exhaust system including piping and silencer is less than the maximum allowable back pressure published by the engine manufacturer, measured at the exhaust manifold header:
            a) Reduce back pressure when recommended by the engine manufacturer.
      c. Provide each exhaust manifold header with a plugged, tapped connection for the attachment of a test manometer.
   2. Exhaust silencer:
      a. Heavy-duty UL 2561 listed industrial type fabricated of welded steel with ported tubes and snubbing chambers, and a rating meeting the specified sound attenuation.
      b. Grade: Critical.
      c. Mounting: As indicated on the Drawings.
      d. End connections: Steel flanges with Class 150-pound drilling pattern.
      e. Shell:
         1) Sufficiently heavy and reinforced to eliminate excessive vibration, stress, or deflection and to support all operating loads with the silencer at elevated temperatures and insulated as specified.
         2) Loads include insulation weight and connecting piping.
      f. Drain: Provide threaded, plugged condensate drain.
      g. Sound attenuation: Attain the following minimum sound attenuation at the listed octave band center frequencies with the engine at full load:

      h. Supports: Provide shell lug supports suitable for supporting and mounting the silencer as indicated on the Drawings; support design to account for elevated temperatures under insulated shell.
      i. Insulate as specified for engine exhaust piping in Section 15050 - Common Work Results for Mechanical.
      j. Pressure drop not to exceed manufacturer’s recommendation at maximum engine rating.

H. Radiator and cooling system:
   1. Unit mounted:
      a. Furnish a skid mounted closed type radiator system for the engine driven generator:
      b. Sized and selected by engine manufacturer to cool the engine and turbo charge aftercooler under ambient conditions.
      c. Provide all necessary coolant specifically suitable for the location and conditions of service throughout the year:
      d. Ship both the engine and the radiator with the coolant installed.

I. Generator control panel:
  1. Microprocessor-based control system that is designed to provide automatic starting, monitoring, protection, and control functions for the generator set.
  2. Mounted on the generator set:
    a. Provide vibration isolation:
      1) Prototype tested to verify the durability of all components in the system under the vibration conditions encountered.
  3. Control system features and functions:
    a. Control switches:
      1) Mode selector switch:
        a) Provide a rotary switch or control panel keypads with status indicators.
        b) The mode select switch initiates the following control modes:
          (1) RUN or Manual position:
            (a) Generator set starts and accelerates to rated speed and voltage.
          (2) OFF or STOP position:
            (a) Generator set immediately stops, bypassing all time delays.
          (3) AUTO position:
            (a) Generator set accepts a signal from a remote device to start and accelerate to rated speed and voltage.
      2) EMERGENCY STOP switch:
        a) Red “mushroom-head” pushbutton.
        b) Activating the emergency stop switch causes the engine to immediately stop and be locked out from automatic restarting.
      3) RESET switch:
        a) Clears all faults and allow restarting the engine generator after it has shut down for any fault condition.
      4) PANEL LAMP switch or automatic display panel illumination.
    b. AC output metering: Provide the control system with metering including the following features and functions:
      1) Provide digital metering:
        a) 1.0 percent accuracy.
      2) Voltmeter:
        a) RMS voltage.
        b) Line-to-line.
        c) Line-to-neutral.
      3) Ammeter:
        a) RMS current.
      4) Frequency.
      5) Power Factor.
      6) Kilowatts (kW):
        a) kW-hours.
        b) Output kW.
      7) Kilovars (kVars):
        a) kVar-hours.
        b) Output kVar.

c. Generator alarm and status display:
  1) Provide high-intensity LED alarm and status indication lamps. Functions indicated include:
    a) Red alarm-indicating lamps.
    b) Red common shutdown lamp.
    c) Green lamp to indicate the engine generator is running at rated frequency and voltage based on actual sensed voltage and frequency on the output terminals of the generator set.
    d) Flashing red lamp to indicate that the control is not in automatic state.
    e) Amber common warning indication lamp.
  2) Display the following alarm and shutdown conditions on an alphanumeric digital display panel:
    a) Low oil pressure (alarm).
    b) Low oil pressure (shutdown).
    c) Oil pressure sender failure (alarm or indication).
    d) Low coolant temperature (alarm).
    e) High coolant temperature (alarm).
    f) High coolant temperature (shutdown).
    g) Engine temperature sender failure (alarm or indication).
    h) Low coolant level (alarm or shutdown - selectable).
    i) Fail to crank (shutdown).
    j) Fail to start/overcrank (shutdown).
    k) Overspeed (shutdown).
    l) Low DC battery voltage (alarm).
    m) High DC battery voltage (alarm).
    n) High AC voltage (shutdown).
    o) Low AC voltage (shutdown).
    p) Under frequency (programmable for alarm or shutdown).
    q) Overcurrent (programmed for warning or shutdown).
    r) Short circuit - circuit breaker function (trip).
    s) Emergency stop (shutdown).
  3) The control shutdown fault conditions shall be configurable for fault bypass.

d. Engine status monitoring:
  1) Display the following status conditions on an alphanumeric digital display panel:
    a) Engine oil pressure (pounds per square inch or kilopascal).
    b) Engine coolant temperature (degrees Fahrenheit or Celsius).
    c) Engine oil temperature (degrees Fahrenheit or Celsius).
    d) Engine speed (revolutions per minute).
    e) Number of start attempts.
    f) Battery voltage (DC volts).

e. Data logging and display provision:
  1) Log the last 10 warning or shutdown indications on the engine generator.
  2) Monitor the total load on the generator:
    a) Maintain data logs of total operating hours at specific load levels ranging from 0 to 110 percent of rated load, in 10 percent increments.
    b) Display total hours of operation at less than 30 percent load and total hours of operation at more than 90 percent of rated load.

            - 3) The control system to log:
                - a) Total number of operating hours.
                - b) Total kW hours.
                - c) Total control operational hours.
        - f. Engine control functions:
            - 1) Provide a cycle cranking system, which allows for user selected crank time, rest time, and number of cycles:
                - a) Initial settings shall be for 3 cranking periods of 15 seconds each, with 15-second rest period between cranking periods.
            - 2) Provide an engine governor control, which functions to provide steady state frequency regulation as noted elsewhere in this Specification, including adjustments for gain, damping, and a ramping function to control engine speed and limit exhaust smoke while the unit is starting.
            - 3) Provide time delay start (adjustable 0 to 300 seconds) and time delay stop (adjustable 0 to 600 seconds) functions.
        - g. Battery monitoring system:
            - 1) Initiate alarms when the DC control and starting voltage is outside the manufacturer's tolerances.
            - 2) Disable the low voltage limit during engine cranking (starter engaged).
            - 3) Monitor DC voltage as load is applied to the battery, to detect impending battery failure or deteriorated battery condition.
        - h. Remote control interface:
            - 1) Provide a minimum of 4 programmable output relays:
                - a) Configurable for any alarm, shutdown, or status condition.
            - 2) Provide a minimum of 4 programmable inputs:
                - a) Label as indicated on the Drawings.
                - b) Labels shall match other control labels.
    - 4. Communications:
        - a. MODBUS RS-485.

- J. Battery system:
    - 1. Installed on the engine-driven generator skid.
    - 2. Provide extra flexible minimum 4/0 welding cable to make the connection between the battery and the engine:
        - a. Proper compression lugs and tooling must be used to terminate these cables.
    - 3. Provide a 12- or 24-volt lead acid recombination no maintenance engine start battery system:
        - a. The battery shall have sufficient capacity, at the minimum and maximum temperature specified, to provide the specified cranking periods.
    - 4. Charger:
        - a. Sized to provide sufficient power to both fully charge a drained battery.
        - b. Location: On the engine skid.
        - c. DC ammeter and DC voltmeter.
        - d. On-Off switch.
        - e. Solid-state device with adjustable float voltage control.
        - f. Constant voltage design with current limit.
        - g. With an equalize switch which will allow the battery to be overcharged for maintenance purposes or an automatic charging cycle that has an equalize period.

        h. Designed to meet the charge, float, and equalize requirement of the battery furnished.
        i. Overload and short circuit protection.

2.07 ACCESSORIES

A. Fuel system:
  1. Base mounted fuel tank (Sherwood Lakes):
    a. Unit mounted base tank with the capacity to hold 48 hours of fuel with the engine generator set operating at full load.
    b. UL 142 listed tank with secondary containment rupture basin.
    c. Construction:
      1) Reinforced steel channel system.
      2) Minimum thickness of 7-gauge for channels.
      3) Minimum 12-gauge for tank construction.
    d. Provide tank baffle to separate hot fuel return from cooler supply fuel.
    e. Connections:
      1) 1.25-inch minimum vents:
        a) Pipe vent outside any room or enclosure containing the generator set, using Schedule 40 black steel pipe.
      2) 2-inch minimum fill connection.
      3) 2-inch minimum main fuel storage level gauge.
      4) 1.25-inch minimum low fuel level alarm with level switch connected to control panel.
      5) 0.5-inch minimum fuel supply with dip tube.
      6) 0.5-inch minimum fuel return with dip tube.
    f. Rupture basin level switch and alarm.
    g. Finish:
      1) Interior: Treated to inhibit corrosion until fuel is added.
      2) Exterior: Epoxy coating with urethane top coat.
    h. Ancillary equipment:
      1) Provide the following base tank accessories as required by NFPA 30 for project application:
        a) Low fuel level float switch, set at 50 percent.
        b) High fuel level / overfill prevention, audible alarm, set at 90 percent.
        c) Overfill prevention valve on tank fill port, set at 95 percent.
        d) Fill port drop tube to within 6 inches of the bottom of the tank.
        e) Spill containment bucket or basin around fill port.
        f) Interstitial monitoring float switch (leak detection).
        g) Normal vents, extended 13 feet above grade, flame arrester caps.
        h) Emergency vents, on tank and containment basin.
        i) Provisions for connection of grounding conductor.
        j) Tank calibration chart in inches to gallons.
    i. Warning signage:
      1) No Smoking.
      2) Flammable Liquids.
      3) Diesel Fuel.
      4) NFPA 704 Placards.
  2. Engine fuel pump:
    a. Positive displacement pump.

        b. Capable of 5-foot lift minimum.

B. Weatherproof acoustical housing:
    1. Provide engine enclosure to protect engine, generator, starting system, batteries, and other specified accessories from weather exposure.
    2. Meet seismic and wind requirements at the Project Site.
    3. Construction:
        a. Minimum 14-gauge steel panel thickness.
        b. All panels and members hot dip galvanized after fabrication.
        c. Enclosure removable to allow for maintenance.
        d. Fitted with lockable latches.
        e. Stainless steel latches and hinges.
    4. Finishing: Factory or shop finished in epoxy and urethane coating system as specified in Section 09960 - High-Performance Coatings.
    5. Noise reduction:
        a. Provide acoustical insulation and acoustical enclosure ventilation louvers and fan discharge silencers as necessary to achieve a measured sound pressure level of 75 dBA when measured at 23 feet from the enclosure.
        b. Protect acoustical insulation with perforated metal covers and plastic bagging to prevent damage from abrasion or weather elements.
        c. Provide an exhaust silencer matched to the enclosure to reduce the overall noise emissions level of the engine/generator assembly to the levels required above.
        d. Doors:
            1) Lockable with 3-point latches:
                a) Keyed alike.
            2) Stainless steel latches and hinges.
    6. Interior light:
        a. Pre-wired battery-operated light powered from the engine cranking batteries.
        b. Located within the enclosure to illuminate the automatic transfer equipment as well as the engine generator control panel.
        c. Controlled by a switch located by one of the entrance doors:
            1) Wind-up timer type switch that automatically shuts off after a preset interval not to exceed 1 hour.
        d. Increase the size of the battery charger and battery to accommodate this additional load.
    7. The engine generator manufacturer is solely responsible for all connections within the generator, the enclosure power system, and the enclosure so that the enclosure and engine generator are a single fully functional system.

C. Wiring:
    1. All external wiring connections to and from the engine and alternator shall be made via 2 engine mounted junction boxes:
        a. One box shall be used for all control and DC power connections.
        b. The other box shall be used for the alternator output connections:
            1) The alternator output breaker may be used for these connections.
    2. Enclose wiring in an NEC approved and recognized conduit system selected and sized by the engine generator manufacturer:
        a. Suitable for the temperatures, vibrations, and conditions on the engine-driven generator skid.

3. Control wiring shall terminate on terminal blocks in the control junction box:
    a. All connections shall be made to terminal blocks:
        1) 600-volt rated.
        2) Wires terminated on box with compression type ring type lugs, installed with proper tooling.
        3) Terminal blocks shall be numbered.
        4) All wiring in terminal box both internal and field connections shall be routed in plastic wire duct.
4. Terminate alternator output connection wires using solderless compression type lugs when connecting to bus bar:
    a. Lug manufacturer's termination methods and tools must be used.
5. Splices are not allowed:
    a. All connections are to be made at the terminal blocks in the control junction boxes.

D. Miscellaneous engine generator skid items:
1. Provide the following items:
    a. Sectionalized drip pans.
    b. Rain shields for exhaust lines.
    c. Roof jacks.

E. Generator output circuit breaker:
1. Engine generator skid mounted and line side connected to alternator.
2. Manually resettable.
3. Line current sensing.
4. Inverse time versus current response.
5. Sized and coordinated to protect the generator from damage from overload and/or short circuit:
    a. Coordinated with downstream devices:
        1) As specified in Section 16305 - Electrical System Studies.
6. Breakers shall be as specified in Section 16412 - Low Voltage Molded Case Circuit Breakers.
7. Provide breakers with proper number of lugs to match cables as indicated on the Drawings.
8. Provide with shunt trip as shown on drawings for emergency disconnect.

2.08 MIXES (NOT USED)

2.09 FABRICATION (NOT USED)

2.10 FINISHES (NOT USED)

2.11 SOURCE QUALITY CONTROL (NOT USED)

PART 3 EXECUTION

3.01 EXAMINATION (NOT USED)

3.02 PREPARATION (NOT USED)

3.03 INSTALLATION

A. As specified in Section 16050 - Common Work Results for Electrical.

B. General:
   1. Install the equipment as indicated on the Drawings.
   2. Perform all Work in accordance with manufacturer’s instructions and shop drawings.
   3. Before start-up, furnish written certification that the entire installation and all connections, both mechanical and electrical, have been inspected and are proper and consistent with the Drawings and Specifications.

C. Installation shall be by personnel experienced and regularly engaged in field installation of power generation systems:
   1. Make all field mechanical and electrical connections.

3.04 ERECTION, INSTALLATION, APPLICATION, CONSTRUCTION (NOT USED)

3.05 REPAIR/RESTORATION (NOT USED)

3.06 RE-INSTALLATION (NOT USED)

3.07 COMMISSIONING

A. As specified in Section 01756 - Commissioning.

B. Design prototype tests as follows:
   1. Use design prototypes similar to the equipment specified in this Section for testing, and not the actual equipment for the Project.
   2. Minimum testing requirements:
      a. In accordance with NFPA.
      b. Maximum power in kW.
      c. Maximum starting kilovolt-ampere at 35 percent instantaneous voltage dip.
      d. Alternator temperature rise:
         1) By embedded thermocouple.
         2) By resistance method.
         3) In accordance with NEMA MG1-22.40 and 16.40.
      e. Governor speed regulation under steady state and transient conditions.
      f. Fuel consumption at 25 percent, 50 percent, 75 percent, and 100 percent load.
      g. Harmonic analysis, voltage wave form deviation, and telephone influence factor.
      h. Cooling airflow.
      i. Torsional analysis testing to verify that the generator set is free of harmful torsional stresses.

        - j. Endurance testing.
        - k. A certified copy of the test results will be furnished to the Owner.

- C. Test each engine generator under varying loads with all machine safety guards and exhaust system in place.

- D. Test the complete engine generator system at full load and rated power factor with a reactive load bank in the manufacturer's factory:
    - 1. Tests shall include:
        - a. Radiator.
        - b. Engine control panel.
        - c. Single-step load pickup.
        - d. Transient and steady-state governing.
        - e. Safety shutdown device testing.
        - f. Rated power.
        - g. Maximum power.
    - 2. During the tests, re-circulate the radiator cooling air through the radiator as necessary to test the system under the maximum ambient conditions specified in this Section.
    - 3. Run the unit for 2 hours with the following recordings made hourly:
        - a. Frequency.
        - b. Voltage.
        - c. Amperage.
        - d. Kilowatts.
        - e. Room temperature measured at the generator end of the unit.
        - f. Radiator air inlet temperature.
        - g. Coolant temperature.
        - h. Oil pressure.
    - 4. Record the following items:
        - a. Time required for the engine/generator to start and reach rated voltage and frequency in seconds.
        - b. Maximum block load capabilities of the unit.
        - c. Point at which overtemperature shutdown occurs.
        - d. Point at which overspeed shutdown occurs.
        - e. Point at which low oil pressure shutdown occurs.
        - f. Point at which overcrank shutdown occurs.
        - g. Low water temperature alarm.
        - h. Low fuel level alarm.
        - i. Fuel leak alarm.
        - j. Overvoltage alarm and shutdown.
        - k. Undervoltage alarm and shutdown.
        - l. Under frequency alarm and shutdown.
        - m. Low battery voltage alarm.
    - 5. Furnish a certified copy of the test results to the Owner:
        - a. Record any minor adjustments made during the test.
        - b. If major changes, as determined by the Engineer, are made, the 2-hour test must be repeated.

- E. Owner training:
    - 1. As specified in Sections 01756 - Commissioning and 16050 - Common Work Results for Electrical.

3.08 FIELD QUALITY CONTROL

A. As specified in Section 16050 - Common Work Results for Electrical.

B. Provide the services of a manufacturer’s representative for the following:
   1. Before start-up, furnish written certification that the entire installation and all connections, both mechanical and electrical, have been inspected and are proper and consistent with all Drawings and Specifications.
   2. Furnish the services of factory-certified technicians during the start-up and adjustment period to make sure all items furnished are in proper operating condition:
      a. Engine technician must be completely knowledgeable in the operation, maintenance, and start-up of the mechanical system.
      b. Electrical technician must be completely knowledgeable in the operation, maintenance, and start-up of the electrical system.
      c. These technicians to instruct the Owner's personnel regarding the operation and maintenance of all items supplied:
         1) Supply written handouts during the training period, and these handouts should be suitable for future reference after the training period is completed.
      d. Furnish a written report after the start-up:
         1) Report must state that the installation is complete and satisfactory.
         2) List the items requiring additional attention.

C. Manufacturer to perform installation check, start-up, and load test.

D. Certify that fuel, lubricating oil, and antifreeze conform to the manufacturer's recommendations under the environmental conditions present.

E. Check accessories that normally function while the equipment is in standby mode for proper operation, before cranking the engine:
   1. These accessories include but are not limited to:
      a. Jacket water heaters.
      b. Fuel heaters, when used.
      c. Battery charger.
      d. Generator strip heaters, when used.

F. Start-up under manual mode:
   1. Check for the following items:
      a. Exhaust leaks.
      b. External path for exhaust gases.
      c. Cooling airflow.
      d. Movement during starting and stopping.
      e. Vibration during running.
      f. Normal and emergency line-to-line voltage and phase rotation.

G. Perform field acceptance tests as specified in Section 16950 - Field Electrical Acceptance Tests.

3.09 ADJUSTING

A. Make adjustments as necessary and recommended by the manufacturer, Engineer, or testing firm.

3.10 CLEANING (NOT USED)

3.11 PROTECTION

A. As specified in Section 16050 - Common Work Results for Electrical.

3.12 SCHEDULES (NOT USED)

END OF SECTION

SECTION 16264

VARIABLE FREQUENCY DRIVES 60 - 500 HORSEPOWER

PART 1 GENERAL

1.01 SUMMARY

A. Section includes:
   1. Clean power 18-pulse or active front-end variable frequency drives (VFD), 60 to 500 horsepower for control of standard NEMA Design B squirrel cage induction motors.

1.02 REFERENCES

A. As specified in Section 16050 - Common Work Results for Electrical.

B. National Electrical Manufacturers Association (NEMA): MGI, Part 31 - Motors with higher peak voltage capability.

C. Institute of Electrical and Electronics Engineers (IEEE):
   1. 519 - IEEE Recommended Practices and Requirements for Harmonic Control in Electrical Power Systems.

D. Underwriters' Laboratories (UL):
   1. 50 - Standards for Enclosures for Electrical Equipment.
   2. 508A - Standard for Safety for Industrial Control Panels.

1.03 DEFINITIONS

A. As specified in Section 16050 - Common Work Results for Electrical.

1.04 SYSTEM DESCRIPTION

A. Design requirements:
   1. Each VFD system shall consist of all components required to meet the performance, protection, safety, testing, and certification criteria of this Section.
   2. The VFD system:
      a. Is a fully integrated package.
      b. Includes all material necessary to interconnect VFD system elements, even if shipped separately.
   3. Any modifications to a standard product necessary to meet this Section shall be made only by the VFD manufacturer.

4. Each VFD shall be completely factory pre-wired, assembled, and then tested as a complete package by the VFD manufacturer to ensure a properly coordinated, fully integrated drive system. The VFD shall be capable of operating standard NEMA Design B motors. It is the responsibility of the VFD manufacturer to ensure that the drive will not damage motor insulation due to high carrier frequency, reflected wave, dv/dt or other drive electrical characteristics:
    a. The VFD manufacturer shall furnish equipment necessary to mitigate potential damage to motor insulation.
    b. Coordinate bearing protection methods with the supplier of the driven equipment.
    c. Motors as specified in Section 16222 - Low Voltage Motors up to 500 Horsepower.
5. Provide VFDs with layouts having all components accessible that are required for general drive maintenance.
    a. General maintenance components include drive fans, relays, control wiring, surge protective devices, overcurrent protection, transformers, indicating lights, and switches.
    b. Drives shall be laid out so that these components can be maintained, removed, and replaced without having to remove any other drive components or wiring. To meet these requirements, drives may be assembled by the manufacturer, or a certified third-party drive integrator may package the drives.
    c. Overall drive size shall not exceed sizes shown on the Drawings.
    d. The use of drives employing active front end technology meeting the total harmonic distortion requirements of IEEE 519 at the drive terminals may be substituted for 18-pulse drives to meet this requirement.

B. Performance:
1. Operating envelope:
    a. Speed and torque requirements:
        1) Provide a variable torque or constant torque VFD as required by the driven load.
        2) The VFD shall be capable of producing a variable alternating voltage/frequency output to provide continuous operation over the 40 to 110 percent (25 to 66 hertz) speed range.
    b. Current requirements:
        1) Provide 100 percent of rated output current on a continuous basis.
        2) Variable torque VFD:
            a) Minimum 110 percent current overload for 1 minute.
        3) Constant torque VFD:
            a) Minimum 150 percent current overload for 1 minute.
2. Harmonics:
    a. The VFD shall comply with IEEE 519 for total harmonic and current distortion calculations and measurements. The VFD shall meet the following distortion limits:
        1) Voltage harmonics: Individual or simultaneous operation of the VFD(s) shall not add more than 3 percent total harmonic voltage distortion THD, while operating from the utility source or more than 5 percent total harmonic voltage distortion while operating from standby generation at the input terminals of the VFD system.

            2) Current harmonics: The maximum allowable total harmonic current distortion limit, TDD, for each VFD shall not exceed 5 percent as measured at the input terminals of the VFD system.
    3. Efficiency:
        a. VFD system minimum efficiency shall be 93 percent at rated kilowatt output of the VFD. VFD system efficiency shall be calculated as follows:

$$Efficiency\ (\%) = \frac{Power\,(Load\,)}{Power\,(Supply\,)}\ x\ 100$$

        b. Power:
            1) Load power is the total 3-phase power measured at the output terminals of the drive system, including output filters.
            2) Supply power is the total power measured at the input terminals of the VFD including input filters, line reactors, phase shifting transformer, harmonic distortion attenuation equipment and auxiliary equipment (e.g., controls, fans) for complete system operation.
    4. Total power factor:
        a. Minimum of 0.96 lagging across the entire speed range.
        b. Under no operating conditions shall the VFD have a leading power factor.
    5. Frequency accuracy:
        a. Minimum of within 0.01 percent.
    6. Speed regulation:
        a. Minimum of within 0.5 percent across the entire speed range.

1.05 SUBMITTALS

A. Furnish submittals as specified in Sections 01330 - Submittal Procedures and 16050 - Common Work Results for Electrical:
    1. Custom prepared by the VFD manufacturer and specific for the equipment furnished.

B. Product data:
    1. Manufacturer of the VFD.
    2. Manufacturer of all components of the VFD.
    3. Dimensions:
        a. Height.
        b. Width.
        c. Depth.
    4. Weight.
    5. Nameplate schedule.
    6. Bill of material.
    7. Ratings:
        a. Voltage.
        b. Phase.
        c. Input current.
        d. Output current.
        e. Interrupting rating.
        f. Momentary current rating.
    8. Catalog cut sheets for major components.
    9. Surge protection data.

10. Design data:
    a. Efficiency and power factor values.
    b. Certification that the drive is sized for the full nameplate motor horsepower and current (at rated RPM) of the driven load at the installed altitude.
    c. Certification that based upon VFD design, cable length to motor, and motor dielectric insulation level that the VFD will not damage motor insulation due to carrier frequency, reflected wave, dv/dt, or other VFD produced characteristics.
    d. Certification that all electronic circuits and printed circuit boards are conformably coated.
11. List of recommended spare parts.
12. For equipment installed in structures designated as seismic design category C, D, E, or F submit the following as specified in Section 16050 - Common Work Results for Electrical:
    a. Manufacturer’s statement of seismic qualification with substantiating test data.
    b. Manufacturer’s special seismic certification with substantiating test data.

C. Shop drawings:
   1. Complete plan and elevation drawings showing:
      a. All dimensions.
      b. Panel, sub-panel and component layout indexed to the bill of material.
      c. Conduit connections.
      d. Required clearance around equipment.
   2. Block diagram showing the basic control and protection systems identifying the protection, control, trip and alarm functions, the reference signals and commands and the auxiliary devices.
   3. Complete schematic, wiring and interconnection diagrams showing connections to both internal and external devices:
      a. Wiring diagrams shall include terminal number and wire numbers.
   4. Complete 1-line and 3-line diagrams including, but not limited to, circuit breakers, motor circuit protectors, contactors, instrument transformers, meters, relays, timers, control devices, and other equipment comprising the complete system:
      a. Device electrical ratings shall be clearly indicated on the Drawings.

D. Installation instructions:
   1. Detail the complete installation of the equipment including rigging, moving, and setting into place.
   2. For equipment installed in structures designated as seismic design category A or B:
      a. Provide manufacturer’s installation instructions and anchoring details for connecting equipment to supports and structures.

E. Calculations:
   1. Harmonic study:
      a. A preliminary harmonic analysis shall be performed. A power system short circuit ratio of 20 shall be used. All VFDs shall be assumed to be operating at maximum speed and maximum load. The short circuit current (ISC) utilized for the harmonic analysis calculations is defined as:
         1) ISC = 20 * (Sum Total Full Load Amps of all VFDs).

        b. A separate harmonic analysis shall be performed based on the standby generator system. Coordinate with the generator manufacturer and the VFD manufacturer so the actual characteristics for the generator supplied, or existing, for this Project are used in the harmonic analysis.
    2. Detailed calculations or details of the actual physical testing performed on the VFD to prove the VFD is suitable for the seismic conditions at the Project Site.

F. Test forms and reports:
    1. Submit complete factory acceptance test procedures and all forms used during the test.
        a. For VFD units less than 250 horsepower, provide certified test results for the actual VFD being furnished or prototype units.
        b. Provide the following certified test reports:
            1) Efficiency at rated power output and output frequency of 60 hertz.
            2) Power factor at 0 percent, 25 percent, 50 percent, 75 percent, and 100 percent speed.
            3) Harmonics at the input terminals of the VFD at 100 percent speed and 100 percent load.
                a) Voltage distortion: Measure individual harmonics up to and including the 50th harmonic and total harmonic distortion.
                b) Current distortion: Measure individual harmonics up to and including the 50th harmonic and total demand distortion.
        c. Submit complete field acceptance test procedures and all forms used during the test:
            1) Certification that the actual measured harmonic distortion for both voltage and current is within the specification limits at the installed site.
            2) Certification that the actual measured peak voltage at the motor terminations is less than 90 percent of the motor insulation dielectric withstand level.

G. Record documents:
    1. Certified record documents of all equipment with information listed above.

H. Manufacturer's field reports:
    1. Certification letter from the VFD manufacturer that the VFD(s) has been inspected and installed in accordance with the manufacturer's requirements.
    2. Report listing the setting of all VFD adjustable parameters and their values after start-up.

I. Operation and maintenance manuals:
    1. Spare parts list with supplier names and part numbers.
    2. Start-up and commissioning instructions and data.
    3. Complete bill of material indexed to the drawings, identifying the catalog or part numbers, manufacturer, and quantities of components of the VFD system.
    4. Operating manuals:
        a. Submit operating instructions and a maintenance manual presenting full details for care and maintenance of each model of VFD provided under this Contract.
    5. Operating instructions:
        a. The written descriptions shall detail the operational functions of all controls on the front panel including keypad functions and parameters.

6. Maintenance manual:
    a. Furnish maintenance manuals with instructions covering all details pertaining to care and maintenance of all equipment as well as identifying all parts.
    b. Manuals shall include but are not limited to the following:
        1) Adjustment and test instructions covering the steps involved in the initial test, adjustment, and start-up procedures.
        2) Detailed control instructions that outline the purpose and operation of every control device used in normal operation.
        3) All schematic wiring and external diagrams:
            a) Furnish drawings in a fully legible reduced 11-inch by 17-inch format.

1.06 QUALITY ASSURANCE

A. As specified in Section 16050 - Common Work Results for Electrical.

B. Qualifications:
1. Any third-party certification, safety or protection requirements shall be applied to the VFD system as a whole. Certification or protection of system elements or individual components by themselves is not acceptable.
2. VFDs shall be UL 508C listed and labeled.
3. VFD systems (packaged VFD panels) shall be UL 508A listed and labeled.
4. VFDs shall be manufactured by the VFD manufacturer at its own facility, which shall have a quality assurance program that is certified in accordance with ISO 9001.

1.07 DELIVERY, STORAGE, AND HANDLING

A. As specified in Section 16050 - Common Work Results for Electrical.

B. Ship VFDs to the job site on a dedicated air ride vehicle that will allow the Contractor to utilize on site off-loading equipment:
1. VFDs shall be delivered to the site pre-assembled and wired.
2. Ship each VFD with 2 tamperproof accelerometers that record the maximum shock and vibration experienced by the VFD during shipping and handling.

C. Furnish temporary equipment heaters within the VFD to prevent condensation from forming.

1.08 PROJECT OR SITE CONDITIONS

A. As specified in Section 16050 - Common Work Results for Electrical.

1.09 SEQUENCING

A. Conduct factory acceptance test and submit certified test results for Engineer’s review.

B. Ship equipment to Project Site after successful completion of factory acceptance test.

C. Assemble equipment in the field.

D. Conduct field acceptance tests including harmonic testing and submit results for Engineer's review.

E. Submit manufacturer's certification that equipment has been properly installed and is fully functional for Engineer's review.

F. Conduct Owner's training sessions.

G. Commissioning and process start-up as specified in Section 01756 - Commissioning.

1.10 SCHEDULING

A. As specified in Section 16050 - Common Work Results for Electrical.

1.11 WARRANTY

A. As specified in Section 16050 - Common Work Results for Electrical.

1.12 SYSTEM START-UP

A. As specified in Section 16050 - Common Work Results for Electrical.

B. The VFD manufacturer shall be responsible for start-up of the VFDs in the presence of the equipment suppliers, Contractor, Engineer, and Owner.

1.13 OWNERS INSTRUCTIONS (NOT USED)

1.14 MAINTENANCE

A. As specified in Section 16050 - Common Work Results for Electrical.

B. Maintenance service: Manufacturer shall describe the field service system available to support the proposed VFD system. As a minimum describe:
   1. Type of technical support available (e.g., system engineering and technician).
   2. Location of field service personnel.
   3. Field service daily rates in dollars per hour and dollars per day.
   4. Guaranteed response times to service requests.

C. Spare parts:
   1. The following spare parts shall be furnished:
      a. Any special dedicated tools for emergency service and troubleshooting.
      b. All hardware and software required for configuration, maintenance, troubleshooting and inquiry of all drive parameters.

PART 2 PRODUCTS

2.01 MANUFACTURERS

A. One of the following or equal:
   1. Schneider-Electric.
   2. Delta Products.

2.02 EXISTING PRODUCTS (NOT USED)

2.03 MATERIALS (NOT USED)

2.04 MANUFACTURED UNITS (NOT USED)

2.05 EQUIPMENT

A. General:
  1. Active front-end type drive shall consist of the following:
    a. Insulated gate bipolar transistor (IGBT), inverter section.
    b. Microprocessor based controls.
    c. Output filter.
  2. Sinusoidal pulse width modulated (PWM) voltage source type drive shall consist of the following:
    a. Integral phase shifting autotransformer:
      1) Converts 3-phase utility power to 3 sets of 3 power circuits with each set phase shifted and powering its own 3-phase bridge rectifier.
    b. Direct current link with capacitors.
    c. Minimum 18-pulse diode rectifier section consisting of 3 three-phase bridge rectifiers.
      1) Specifically designed as a system to share currents between the bridges to within 1 percent.
    d. Insulated gate bipolar transistor (IGBT), inverter section.
    e. Microprocessor based controls.
    f. Output filter.

B. Ratings:
  1. Voltage:
    a. Input voltage: 480 Volts plus or minus 10 percent, 3-phase 60 hertz.
  2. Short-circuit rating:
    a. 65 kA RMS symmetrical.

C. Operational features:
  1. Protective features:
    a. Include the following protective features:
      1) Motor overload protection.
      2) Instantaneous overcurrent.
      3) Instantaneous overvoltage.
      4) Undervoltage.
      5) Power unit overtemperature.
      6) Phase loss.
      7) VFD output short circuit.
      8) VFD output ground fault.
      9) Blown fuse.
  2. Control mode:
    a. The VFD shall operate in a either a constant volts/hertz or sensorless vector mode. Selectable using the programming keypad.
  3. Frequency control:
    a. Minimum of 3 selectable skip frequencies with adjustable bandwidths.
    b. Programmable minimum frequency.
    c. Programmable maximum frequency.

4. Acceleration/Deceleration:
    a. Separately adjustable acceleration and deceleration rates.
    b. Each rate shall be adjustable from 0.01 to 1,800 seconds.
5. Spinning load:
    a. Capable of determining the speed and direction of a spinning load, “catch” the load and accelerate or decelerate it without damage to the load.
6. Programmable loss of signal:
    a. Upon loss of reference speed signal the VFD shall be programmable to either stop, maintain current speed, or default to preselected speed.
7. Power interrupt ride through:
    a. Capable of continuous operation in the event of a power loss of 5 cycles or less.
8. Hardwired inputs and outputs:
    a. Manufacturer’s standard number the following:
        1) Analog inputs:
            a) Configurable as either 0 to 10 volts or 4 to 20 milliamperes.
        2) Analog outputs:
            a) Programmable 4 to 20 milliamperes isolated.
        3) Discrete inputs:
            a) Programmable.
        4) Discrete outputs:
            a) Programmable.
            b) Form C relay contacts.
        5) Potentiometer 3-wire input.
    b. Provide additional inputs and outputs as required to meet the control functions indicated on the Drawings.
9. Communications:
    a. Provide each VFD with a Modbus TCP Ethernet communications interface module.
10. Diagnostics:
    a. Minimum of 4 fault conditions in memory on a first in - first out basis.
    b. Operating frequency, drive status and power mode shall also be stored at the time of the fault.
    c. Fault memory shall be maintained in the event of a power outage.
    d. The fault memory shall be accessible via RS-232, RS-422 or RS-485.
11. Automatic restart:
    a. User selectable, automatic restart feature allowing the VFD to restart following a momentary power failure or other VFD fault:
        1) Programmable for up to 9 automatic restart attempts with an adjustable time delay between restart attempts.

2.06 COMPONENTS

A. Enclosure:
1. NEMA Type 1 enclosure.
2. Provide cooling devices required to maintain the VFD within the manufacturer’s specified temperature limits for the Project conditions:
    a. Provide cooling device alarm.

B. Power disconnect:
1. Flange mounted thermal magnetic circuit breaker:
    a. Lockable in the OFF position.

C. Output Device:
  1. dV/dt filter:
    a. Common mode reduction: 30 percent minimum.
    b. Motor terminal peak voltage limit: 150 percent of dc bus voltage with a motor lead length up to 1000 feet.
    c. Carrier frequency range: up to 12 khz.
    d. Efficiency: 98 percent minimum.
    e. Class H insulation minimum.

D. Keypad:
  1. Furnished with a keypad for programming and control.
  2. Password security to protect drive parameters.
  3. Mounted on the door of the VFD.
  4. Back-lit LCD with a minimum of 2 lines of a minimum of 16 characters each.
  5. Programming and display features language: English.
  6. Capable of displaying the following parameters:
    a. Speed (percent).
    b. Input current (amperes).
    c. Output current (amperes).
    d. Output frequency (hertz).
    e. Input voltage.
    f. Output voltage.
    g. Total 3-phase kilowatt.
    h. Kilowatt hour meter.
    i. Elapsed run time meter.
    j. Revolutions per minute.
    k. Direct current bus voltage.
  7. In addition to all keys required for programming, the keypad shall have the following:
    a. Automatic/Manual selector.
    b. Start pushbutton.
    c. Stop pushbutton.
    d. Jog pushbutton.
    e. Speed increment.
    f. Speed decrement.
    g. Forward/Reverse selector.
    h. RUN indicator.
    i. PROGRAM indicator.
    j. FAULT indicator.
    k. DRIVE READY indicator.
    l. Diagnostics.
  8. Provide the VFD with the hardwired controls indicated on the Drawings.

E. Control power transformer:
  1. Furnish a control power transformer mounted and wired inside the drive enclosure:
    a. Primary and secondary fusing.
  2. Size the transformer to supply power to all VFD controls and options as well as any external devices indicated on the Drawings including the motor winding heater.

2.07 ACCESSORIES

A. Surge protection:
  1. Metal oxide varistors:
    a. Provide protection for the VFD against:
      1) Line transients: 5,000-volt peak minimum.
      2) Line to ground transients: 7,000 peak minimum.

B. Conformal coating:
  1. Provide conformal coating material applied to electronic circuitry and printed circuit boards to act as protection against moisture, dust, temperature extremes, and chemicals such as H_2S and chlorine.

C. Air filters:
  1. Mounted on the outside of the VFD enclosure:
    a. Replaceable without requiring that the VFD be turned off or the door opened.
  2. Located on the front or top of the VFD enclosure.
    a. Side or rear mounted air filters are not acceptable.

2.08 MIXES (NOT USED)

2.09 FABRICATION (NOT USED)

2.10 FINISHES

A. Enclosure finish shall be manufacturer’s standard gray.

2.11 SOURCE QUALITY CONTROL (NOT USED)

PART 3 EXECUTION

3.01 EXAMINATION (NOT USED)

3.02 PREPARATION (NOT USED)

3.03 INSTALLATION

A. As specified in Section 16050 - Common Work Results for Electrical.

B. Install the equipment in accordance with the accepted installation instructions and anchorage details to meet the seismic and wind load requirements at the Project site.

C. General:
  1. Furnish all cables, conduit, lugs, bolts, expansion anchors, sealants, and other accessories needed to complete installation of the VFD (free-standing or within motor control center).
  2. Assemble and install the VFD in the locations and with the layouts indicated on the Drawings.
  3. Perform Work in accordance with the manufacturer’s instructions and shop drawings.

4. Furnish components, and equipment as required to complete the installation.
5. Replace any hardware lost or damaged during the installation or handling to provide a complete installation.
6. Install free-standing enclosures on 3-1/2-inch raised concrete housekeeping pad:
    a. Provide structural leveling channels in accordance with the manufacturer’s recommendations to provide proper alignment of the units.
    b. Weld and/or bolt the VFD frame to the leveling channels.
7. Provide openings in top or bottom of the VFD (free-standing or within motor control center) enclosure for conduit only, no additional openings will be allowed:
    a. Improperly cut holes will require that the entire panel be replaced:
        1) No hole closers or patches will be allowed.
8. Bundle circuits together and terminate in each unit:
    a. Tie with nylon wire ties. As specified in Section 16123 - 600-Volt or Less Wires and Cables.
    b. Label all wires at each end with wire numbers shown on the approved Control Drawings.
    c. All connections to and from the VFD (free-standing or within motor control center) enclosure must be made via terminal blocks.

3.04 ERECTION, INSTALLATION, APPLICATION, CONSTRUCTION (NOT USED)

3.05 REPAIR/RESTORATION (NOT USED)

3.06 RE-INSTALLATION (NOT USED)

3.07 COMMISSIONING

A. As specified in Section 01756 - Commissioning.

B. Factory testing:
1. Owner and Engineer will witness the factory acceptance test as specified in Section 16050 - Common Work Results for Electrical.
2. General:
    a. All VFDs furnished under this Section shall be tested and inspected as specified below.
    b. The testing procedures specified are the minimum acceptable requirements. The manufacturer may perform additional tests at its discretion.
3. Failure of any component during testing requires replacement of the faulted component and a complete retest.
4. Testing sequence:
    a. Submit a detailed test procedure for the VFD factory test:
        1) A minimum of 8 weeks in advance of the proposed testing date.
        2) No tests shall be performed until the test procedure is reviewed and accepted by the Engineer.
5. Component tests:
    a. Preliminary inspection:
        1) Verify that all components are correct.
        2) Verify that all connections are properly torqued.

b. Printed circuit boards:
  1) Test each printed circuit board per the manufacturer’s standard testing procedure.

c. Wiring:
  1) Control and power wiring continuity verified point-to-point.
  2) Hi-pot power and control wiring at manufacturer’s recommended levels.
  3) Verify ground bond resistance.

d. Load testing:
  1) No load testing in accordance with the manufacturer’s standard factory test procedure.
  2) Full load testing:
    a) Test each VFD and all control logic with a representative motor or dynamometer load to simulate field operation conditions at 25 percent, 50 percent, and 100 percent full load current.
    b) Tests shall be conducted in a manner in which the inverter (IGBT) section supplies all the output power (kw) of the VFD system. Control strategies using a contactor or other means of bypassing the VFD when operating at the line frequency shall not be permitted.
    c) Tests shall be conducted using a minimum output frequency of 60 hertz, and a minimum switching frequency of 2.5 kHz.

C. Owner training:
  1. As specified in Sections 01756 - Commissioning and 16050 - Common Work Results for Electrical.

3.08 FIELD QUALITY CONTROL

A. As specified in Section 16050 - Common Work Results for Electrical.

B. Provide the services of a VFD manufacturer representative for start-up assistance and training:
  1. Inspection and field adjustment:
    a. Supervise the following and submit written certification that the equipment and controls have been properly installed, aligned, adjusted, and readied for operation.
  2. Start-up field testing:
    a. Provide technical direction for testing, checkout, and startup of the VFD equipment in the field.
    b. Under no circumstances are any portions of the drive system to be energized without authorization from the manufacturer's representative.
    c. Compliance with the following specified parameters shall be verified by the VFD manufacturer:
      1) Motor terminal voltage:
        a) Make field measurements at the motor connection box.
        b) Make measurements of the full speed range of the VFD.
        c) Make measurements with a recording type oscilloscope.
      2) Harmonics:
        a) Make field measurements at the input terminals of the VFD with and without the VFD in operation.

            - b) Harmonic testing shall include utility power as well as generator standby power.
            - c) Make measurements with a recording type harmonic analyzer displaying individual and total harmonic currents and voltages:
                - (1) Record currents and voltages for a minimum of 10 minutes.
                - (2) Analyzers using snapshots are not acceptable.

3.09 ADJUSTING

A. Make all adjustments as necessary and recommended by the manufacturer, Engineer, or testing firm.

B. Provide the services of a VFD manufacturer factory technician to make all drive parameter and protective device settings:

1. Protective device settings provided by the VFD manufacturer in accordance with the manufacturer of the driven equipment requirements.
2. Provide documentation of VFD settings included but not limited to:
    - a. Minimum speed.
    - b. Maximum speed.
    - c. Skip speeds.
    - d. Current limit.
    - e. Acceleration time.
    - f. Deceleration time.
    - g. Carrier frequency.

3.10 CLEANING

A. As specified in Section 16050 - Common Work Results for Electrical.

B. Clean interior of all VFDs to ensure all dust and debris have been removed. Clean or provide new air filters at completion of construction to ensure there is no construction dust in the filters.

3.11 PROTECTION

A. As specified in Section 16050 - Common Work Results for Electrical.

3.12 SCHEDULES (NOT USED)

END OF SECTION

SECTION 16272

DRY-TYPE TRANSFORMERS

PART 1 GENERAL

1.01 SUMMARY

A. Section includes:
   1. Enclosed dry-type transformers:
      a. Rated 1 to 1,000 kilovolt-amperes, single and 3-phase.
      b. Primary voltage 600 volts and below.

1.02 REFERENCES

A. As specified in Section 16050 - Common Work Results for Electrical.

B. Institute of Electrical and Electronics Engineers (IEEE):
   1. 389 - IEEE Recommended Practice for Testing Electronics Transformers and Inductors.
   2. C57.12.01 - IEEE Standard General Requirements for Dry-Type Distribution and Power Transformers Including Those with Solid Cast and/or Resin Encapsulated Windings.
   3. C57.96 - IEEE Guide for Loading Dry-Type Distribution and Power Transformers.

C. National Electrical Manufacturers Association (NEMA):
   1. 250 - Enclosures for Electrical Equipment (1000 V Maximum).

D. Underwriters Laboratory (UL):
   1. 1561 - Standard for Dry-Type General Purpose and Power Transformers.

E. U.S. Department of Energy (DOE):
   1. 10 CFR Part 431 - Energy Efficiency Program for Certain Commercial and Industrial Equipment.

1.03 DEFINITIONS

A. As specified in Section 16050 - Common Work Results for Electrical.

B. NEMA:
   1. Type 2 enclosure in accordance with NEMA 250.
   2. Type 3R enclosure in accordance with NEMA 250.

1.04 SYSTEM DESCRIPTIONS

A. Provide 3-phase or 1-phase, 60 hertz dry-type with voltage ratings, kilovolt-ampere capacities, and connections as indicated on the Drawings:
   1. Transformers shall provide full capacity at the Project elevation and environmental conditions as specified in Section 16050 - Common Work Results for Electrical after all derating factors have been applied.
   2. Suitable for continuous operation at full rating with normal life expectancy in accordance with IEEE C57.96.

1.05 SUBMITTALS

A. Furnish submittals as specified in Sections 01330 - Submittal Procedures and 16050 - Common Work Results for Electrical.

B. Product data:
   1. Catalog cut sheets.
   2. Nameplate data.
   3. Dimensions:
      a. Height.
      b. Width.
      c. Depth.
   4. Inrush current.
   5. Insulation system and temperature constraints.
   6. Number and rating of taps.
   7. Sound levels.
   8. Connection diagrams:
      a. Primary.
      b. Secondary.
   9. BIL rating.
   10. Required clearances.
   11. Percent impedance.
   12. Efficiency.
   13. Certification of full capacity capability at the Project elevation and ambient conditions.

C. Installation instructions:
   1. Detail the complete installation of the equipment including rigging, moving, and setting into place.
   2. For equipment installed in structures designated as seismic design category A:
      a. Provide manufacturer’s installation instructions and anchoring details for connecting equipment to supports and structures.

1.06 QUALITY ASSURANCE

A. As specified in Section 16050 - Common Work Results for Electrical.

1.07 DELIVERY, STORAGE, AND HANDLING

A. As specified in Section 16050 - Common Work Results for Electrical.

1.08 PROJECT OR SITE CONDITIONS

A. As specified in Section 16050 - Common Work Results for Electrical.

1.09 SEQUENCING (NOT USED)

1.10 SCHEDULING (NOT USED)

1.11 WARRANTY

A. As specified in Section 16050 - Common Work Results for Electrical.

1.12 SYSTEM START-UP

A. As specified in Section 16050 - Common Work Results for Electrical.

1.13 OWNER'S INSTRUCTIONS (NOT USED)

1.14 MAINTENANCE (NOT USED)

PART 2 PRODUCTS

2.01 MANUFACTURERS

A. One of the following or equal:
   1. Schneider Electric - Square D.

2.02 EXISTING PRODUCTS (NOT USED)

2.03 MATERIALS

A. Cores:
   1. Non-aging, grain-oriented silicon steel.
   2. Magnetic flux densities below the saturation point.

B. Windings:
   1. High-grade magnet wire.
   2. Impregnated assembly with non-hydroscopic, thermo-setting varnish:
      a. Cured to reduce hot-spots and seal out moisture.
   3. Material electrical grade:
      a. Copper.

2.04 MANUFACTURED UNITS (NOT USED)

2.05 EQUIPMENT

A. General:
   1. 10 kilovolts BIL for 600-volt class windings.

2. Sound levels, in accordance with IEEE 389 test conditions, not to exceed:

Kilovolt-Amperes Range	Audible Sound Level (db)
1-9	40
10-50	45
51-150	50
151-300	55
301-500	60
501-700	62
701-1000	64

3. Taps:
    a. 15 kilovolt-amperes and less:
        1) Two 5 percent full capacity primary taps below rated voltage.
    b. 25 kilovolt-amperes and larger:
        1) Four 2.5 percent full capacity primary taps below rated voltage.
        2) Two 2.5 percent full capacity primary taps above rated voltage.
    c. Operated by a tap changer handle or tap jumpers accessible through a panel.
4. Terminals:
    a. UL listed for either copper or aluminum conductors.
    b. Rated for 75 degrees Celsius.
5. Daily overload capacities, at rated voltage and without reduction in life, in accordance with IEEE C57.96.

B. Transformers less than 15 kilovolt-amperes:
    1. Insulation class: 185 degrees Celsius.
    2. Temperature rise: 115 degrees Celsius.

C. Low temperature rise transformers 15 kilovolt-amperes and larger:
    1. Insulation class: 220 degrees Celsius.
    2. Temperature rise: 80 degrees Celsius.
    3. Efficiency:
        a. Minimum of 95 percent for 80-degree rise.
        b. Minimum of 96 percent for 115-degree rise.

D. Enclosures:
    1. Heavy gauge steel:
        a. Outdoor: Moisture and water resistant with rodent screens over all openings and in a weather-protected enclosure, NEMA Type 3R.
        b. Indoor: NEMA Type 2.
    2. Louvers to limit coil temperature rise to the value stated above, and case temperature rise to 50 degrees Celsius.
    3. Built-in vibration dampeners to isolate the core and coils from the enclosure:
        a. Neoprene vibration pads and sleeves.

2.06 COMPONENTS (NOT USED)

2.07 ACCESSORIES

A. Nameplates:
   1. Non-corrosive metal or UL listed non-metallic:
      a. Stamped, engraved or printed with the following information:
         1) Phases.
         2) Frequency.
         3) Kilovolt-ampere rating.
         4) Voltage ratings.
         5) Temperature rise.
         6) Impedance.
         7) Insulation class.
         8) BIL rating.
         9) Connection diagram.
         10) Weight.
         11) Manufacturer.
         12) The identification "transformer".
         13) Classes of cooling.
         14) Tap voltage(s).
         15) Vector diagram.

2.08 MIXES (NOT USED)

2.09 FABRICATION (NOT USED)

2.10 FINISHES

A. Finish to consist of de-greasing, phosphate cleaning, and an electrodeposited manufacturer's standard gray enamel rust-inhibiting paint.

2.11 SOURCE QUALITY CONTROL (NOT USED)

PART 3 EXECUTION

3.01 EXAMINATION (NOT USED)

3.02 PREPARATION (NOT USED)

3.03 INSTALLATION

A. As specified in Section 16050 - Common Work Results for Electrical.

B. Install the equipment in accordance with the accepted installation instructions and anchorage details to meet the seismic and wind load requirements at the Project site.

C. General:
   1. Floor, wall, platform, motor control center, packaged power supply, or roof mounted, as indicated on the Drawings.
   2. Install where not in direct contact with building structure.

3. Install on single layer vibration pad under the entire mounting surface.
    a. Manufacturers: The following or equal:
        1) Korfund.
4. Make any necessary connections to the enclosure with liquidtight flexible conduit having neoprene gaskets and insulated ground bushings.
5. Ground the enclosure:
    a. To an equipment ground conductor in the conduit.
    b. To the facility grounding electrode system.
6. Floor mounted transformers:
    a. Install transformers on 3-1/2-inch housekeeping pads.
    b. Install transformers with adequate space from walls or other enclosures for proper ventilation in accordance with the manufacturer's recommendations.

3.04 ERECTION, INSTALLATION, APPLICATIONS, CONSTRUCTION (NOT USED)

3.05 REPAIR/RESTORATION (NOT USED)

3.06 RE-INSTALLATION (NOT USED)

3.07 COMMISSIONING

A. As specified in Section 01756 - Commissioning.

B. Factory tests:
1. Applied voltage test to each winding and from each winding to the core:
    a. 600-volt class winding 4.5 kilovolt.
2. Induced voltage test at 2 times normal voltage and 400 hertz for 1,080 cycles.
3. Voltage ratio and polarity.
4. Sound level, performed in a test room with ambient sound level not exceeding 24 db.
5. Perform all tests in accordance with UL 1561.

3.08 FIELD QUALITY CONTROL

A. As specified in Section 16050 - Common Work Results for Electrical.

3.09 ADJUSTING

A. Set the transformer taps as required to obtain nominal output voltage on the secondary terminals.

3.10 CLEANING

A. As specified in Section 16050 - Common Work Results for Electrical.

3.11 PROTECTION

A. As specified in Section 16050 - Common Work Results for Electrical.

3.12 SCHEDULES (NOT USED)

END OF SECTION

SECTION 16285

SURGE PROTECTIVE DEVICES

PART 1 GENERAL

1.01 SUMMARY

A. Section includes:
   1. High-energy surge protective devices.

1.02 REFERENCES

A. As specified in Section 16050 - Common Work Results for Electrical.

B. Institute of Electrical and Electronics Engineers (IEEE):
   1. C62.41 - Recommended Practice on Surge Voltages in Low Voltage AC Power Circuits.
   2. C62.45 -Guide on Surge Testing for Equipment Connected to Low-Voltage (1000 V and Less) AC Power Circuits.
   3. C62.62- Standard Test Specifications for Surge Protective Devices for Low Voltage AC Power Circuits.

C. National Electrical Manufacturers Association (NEMA):
   1. 250 - Enclosures for Electrical Equipment (1000 V Maximum).

D. Underwriters Laboratory:
   1. 1449, 4th Edition, Standard for Surge Protective Devices.

1.03 DEFINITIONS

A. As specified in Section 16050 - Common Work Results for Electrical.

B. NEMA:
   1. Type 1 enclosure in accordance with NEMA 250.
   2. Type 4 enclosure in accordance with NEMA 250.
   3. Type 4X enclosure in accordance with NEMA 250.
   4. Type 12 enclosure in accordance with NEMA 250.

C. Specific definitions:
   1. SPD: Surge protective device.
   2. SAD: Silicon avalanche diode.
   3. MOV: Metal oxide varistor.
   4. MCOV: Maximum continuous operating voltage.
   5. I_n: Nominal discharge current.
   6. VPR: Voltage protection rating.
   7. SCCR: Short circuit current rating.

1.04 SYSTEM DESCRIPTION

A. Surge protective devices as an integral component of the electrical equipment or externally mounted as indicated on the Drawings.

1.05 SUBMITTALS

A. Furnish submittals as specified in Sections 01330 - Submittal Procedures and 16050 - Common Work Results for Electrical.

B. Product data:
  1. Furnish complete product data confirming detailed compliance or exception statements to all provisions of this Section.
  2. Manufacturer’s catalog cut sheets indicating:
     a. Manufacturer and model numbers.
     b. Ratings of each SPD including but not limited to:
        1) Short circuit current rating.
        2) Nominal discharge current.
        3) Maximum continuous operating voltage.
        4) Voltage protection rating.
        5) System voltage.
        6) System frequency.
        7) Surge current capacity.
  3. Submit independent test data from a nationally recognized testing laboratory verifying the following:
     a. Overcurrent protection.
     b. UL 1449.

C. Shop drawings:
  1. Provide electrical and mechanical drawings by the manufacturer that detail:
     a. Unit dimensions.
     b. Weights.
     c. Components.
     d. Field connection locations.
     e. Mounting provisions.
     f. Connection details.
     g. Wiring diagram.

D. Operation and maintenance manuals:
  1. Provide the manufacturer’s manual with installation, start-up, spare parts lists, and operating instructions for the specified system.

1.06 QUALITY ASSURANCE

A. As specified in Section 16050 - Common Work Results for Electrical.

B. Provide SPD units that are designed, manufactured, tested and installed in compliance with the following codes and standards:
  1. Institute of Electrical and Electronics Engineers (IEEE C62.41, C62.45, C62.62).
  2. Federal Information Processing Standards Publication 94 (FIBS PUB 94).
  3. National Electrical Manufacturer Association.
  4. National Fire Protection Association (NFPA 20, 75 and 780).

5. National Electric Code (NFPA 70).
6. Underwriters Laboratories (UL 1449 4th Edition and UL 1283).
7. International Electrotechnical Commission (IEC 801).

1.07 DELIVERY, STORAGE, AND HANDLING

A. As specified in Section 16050 - Common Work Results for Electrical.

1.08 PROJECT OR SITE CONDITIONS

A. As specified in Section 16050 - Common Work Results for Electrical.

1.09 SEQUENCING

A. Coordinate with and provide SPD equipment to the electrical equipment manufacturer before final assembly and factory testing.

1.10 SCHEDULING (NOT USED)

1.11 WARRANTY

A. As specified in Section 16050 - Common Work Results for Electrical.

B. Extended warranty:
   1. Furnish a manufacturer’s full 5-year parts and labor warranty from date of shipment against any part failure when installed in compliance with manufacturer's written instructions, UL listing requirements, and any applicable national, state, or local electrical codes.
   2. Warranty shall include:
      a. Direct, factory trained employees must be available within 48 hours for assessment of the problem.
      b. A 24-hour toll-free 800-number for warranty support.

1.12 SYSTEM START-UP

A. As specified in Section 16050 - Common Work Results for Electrical.

1.13 OWNER'S INSTRUCTIONS (NOT USED)

1.14 MAINTENANCE (NOT USED)

PART 2 PRODUCTS

2.01 MANUFACTURERS

A. One of the following or equal:
   1. Schneider Electric.
   2. Eaton.
   3. Innovative Technology.

2.02 EXISTING PRODUCTS (NOT USED)

2.03 MATERIALS (NOT USED)

2.04 MANUFACTURED UNITS

A. Provide Type 1 or Type 2 SPD units as required for the locations indicated on the Drawings.

B. Electrical requirements:
   1. SPD ratings are to be consistent with the nominal system operating voltage, phase, and configuration as indicated on the Drawings.
   2. MCOV:
      a. For the SPD and all components in the suppression path (including all MOVs, SADs, and selenium cells): Greater than 115 percent of the nominal system operating voltage.
   3. Operating frequency:
      a. 47 to 63 hertz.
   4. SCCR:
      a. 65 kAIC minimum, but not less than the equipment it is connected to as indicated on the Drawings.
      b. The SCCR shall be marked on the SPD in accordance with UL 1449 and the NEC.
   5. Nominal discharge current I_n:
      a. 20 kA.
   6. Maximum VPR:

Modes	240/120	208Y/120	480Y/277
L-N, L-G, N-G	900	900	1,500
L-L	1,200	1,200	2000

   7. Peak surge current:
      a. Service entrance locations:
         1) 240 kA per phase minimum.
         2) 120 kA per mode minimum.
      b. Branch locations:
         1) 120 kA per phase, minimum.
         2) 60 kA per mode minimum.

C. Protection modes:
   1. Provide SPD protection modes as follows:
      a. Line to Neutral (L-N) where applicable.
      b. Line to Ground (L-G).
      c. Neutral to Ground (N-G), where applicable.

D. Environmental requirements:
   1. Storage temperature:
      a. -40 degrees to +50 degrees Celsius.
   2. Operating temperature:
      a. -0 degrees to +60 Celsius.
   3. Relative humidity:
      a. 5 percent to 95 percent.
   4. Audible noise:
      a. Less than 45 dBa at 5 feet (1.5 m).

    5. Operating altitude:
        a. Zero to 12,000 feet above sea level.

E. Provide surge protective devices that are suitable for application in IEEE C62.41 Category A, B and C3 environments, as tested to IEEE C62.45.

2.05 EQUIPMENT (NOT USED)

2.06 COMPONENTS

A. Enclosure:
    1. Located in electrical equipment as indicated on the Drawings.

B. Internal connections:
    1. Provide low impedance copper plates for intra-unit connections:
        a. Attach surge modules using bolted connections to the plates for low impedance connections.
    2. Size all connections, conductors, and terminals for the specified surge current capacity.

C. Surge diversion modules:
    1. MOV:
        a. Where multiple MOVs are used in parallel, utilize computer matched MOVs to within 1 volt variance and tested for manufacturer's defects.

D. Overcurrent protection:
    1. Individually fuse all components, including suppression, filtering, and monitoring components:
        a. Rated to allow maximum specified nominal discharge current capacity.
        b. Overcurrent protection that limits specified surge currents is not acceptable.

E. Connections:
    1. Provide terminals to accommodate wire sizes up to #2 AWG.

2.07 ACCESSORIES

A. Unit status indicators:
    1. Provide red and green solid-state indicators, with printed labels, on the front cover to redundantly indicate on-line unit status:
        a. The absence of the green light and the presence of the red light indicate that surge protection is reduced and service is needed to restore full operation.
        b. Indicates the status of protection on each mode or phase.

B. Dry contacts for remote monitoring:
    1. Electrically isolated Form C dry contacts (1 A/125 VAC) for remote monitoring of system integrity, and indication of under voltage, phase and/or power loss.

C. Provide an audible alarm which activates under any fault condition.
    1. Provide an alarm On/Off switch to silence the alarm.
    2. A visible LED will confirm whether alarm is On or Disabled.
    3. Locate both switches and the audible alarm on the unit’s front cover.

2.08 MIXES (NOT USED)

2.09 FABRICATION (NOT USED)

2.10 FINISHES (NOT USED)

2.11 SOURCE QUALITY CONTROL

A. Permanently affix surge rating to the SPD.

B. Perform manufacturer’s standard factory test:
   1. Perform testing in accordance with UL 1449.

PART 3 EXECUTION

3.01 EXAMINATION (NOT USED)

3.02 PREPARATION (NOT USED)

3.03 INSTALLATION

A. As specified in Section 16050 - Common Work Results for Electrical.

B. Follow the manufacturer's recommended installation practices and comply with all applicable codes.

C. Special techniques:
   1. Install the SPD with as short and straight conductors including ground conductor as practically possible:
      a. Twist the input conductors together to reduce input conductor inductance.
   2. Do not subject SPD to insulation resistance testing.

3.04 ERECTION, INSTALLATION, APPLICATION, CONSTRUCTION (NOT USED)

3.05 REPAIR/RESTORATION (NOT USED)

3.06 RE-INSTALLATION (NOT USED)

3.07 COMMISSIONING

A. As specified in Section 01756 - Commissioning.

3.08 FIELD QUALITY CONTROL

A. As specified in Section 16950 - Field Electrical Acceptance Tests.

3.09 ADJUSTING (NOT USED)

3.10 CLEANING (NOT USED)

3.11 PROTECTION

A. As specified in Section 16050 - Common Work Results for Electrical.

3.12 SCHEDULES (NOT USED)

END OF SECTION

THIS PAGE INTENTIONALLY LEFT BLANK

SECTION 16290

ELECTRICAL POWER MONITORING

PART 1 GENERAL

1.01 SUMMARY

A. Section includes:
   1. Power meters.

1.02 REFERENCES

A. As specified in Section 16050 - Common Work Results for Electrical.

B. American National Standard Institute (ANSI):
   1. C12.20 - Electricity Meters - 0.2 and 0.5 Accuracy Classes.

C. Institute of Electrical and Electronics Engineers (IEEE):
   1. C57.13.6 - Standard for High Accuracy Instrument Transformers.

1.03 DEFINITIONS

A. As specified in Section 16050 - Common Work Results for Electrical.

B. Specific definitions:
   1. FS - Full Scale.
   2. RDG - Of Reading.
   3. SSM - Solid State Multifunction Power Meter.
   4. THD - Total Harmonic Distortion.

1.04 SYSTEM DESCRIPTION (NOT USED)

1.05 SUBMITTALS

A. Furnish submittals as specified in Sections 01330 - Submittal Procedures and 16050 - Common Work Results for Electrical.

B. Product data:
   1. Power meter data including but not limited to:
      a. Power requirements.
      b. Communications protocols.
      c. Input/outputs.
      d. Dimensions.
      e. Measurement functions.
      f. Front panel controls.
      g. Display characteristics.

C. Operation and maintenance manuals:
   1. Descriptive and technical bulletins and sales aids edited to reflect only the equipment to be provided and covering each of the components in the system.
   2. A maintenance section including all instruction leaflets and technical data necessary to setup, change setup and maintain the power meters.
   3. Original licensed copies of all software and software manuals.

1.06 QUALITY ASSURANCE

A. As specified in Section 16050 - Common Work Results for Electrical.

1.07 DELIVERY, STORAGE, AND HANDLING

A. As specified in Section 16050 - Common Work Results for Electrical.

1.08 PROJECT OR SITE CONDITIONS

A. As specified in Section 16050 - Common Work Results for Electrical.

1.09 SEQUENCING (NOT USED)

1.10 SCHEDULING (NOT USED)

1.11 WARRANTY

A. As specified in Section 16050 - Common Work Results for Electrical.

1.12 SYSTEM START-UP

A. As specified in Section 16050 - Common Work Results for Electrical.

1.13 OWNER'S INSTRUCTIONS (NOT USED)

1.14 MAINTENANCE (NOT USED)

PART 2 PRODUCTS

2.01 MANUFACTURERS

A. One of the following, or equal:
   1. Schneider Electric, PM 5320.

B. Provide power meters of the same manufacturer as the main electrical gear.

2.02 EXISTING PRODUCTS (NOT USED)

2.03 MATERIALS (NOT USED)

2.04 MANUFACTURED UNITS (NOT USED)

2.05 EQUIPMENT (NOT USED)

2.06 COMPONENTS

A. Power meters:
  1. Power meter (SSM) device which shall include at a minimum:
    a. Individual phase currents, plus or minus 0.3 percent FS.
    b. Phase-to-phase and phase-to-neutral voltages, plus or minus 3 percent FS.
    c. Watts, VARs, VA, plus or minus 6 percent FS.
    d. Watt-hours 0.6 percent FS; VAR-hours 0.6 percent FS; VA-hours 0.6 percent FS.
    e. PF apparent 1 percent FS; PF displacement 1 percent FS.
    f. Frequency 0.17 percent FS.
    g. THD:
      1) Voltage - 31st harmonic.
      2) Current - 31st harmonic.
    h. Demand:
      1) Ampere, plus or minus 0.3 percent FS.
      2) Watt, VAR, VA, plus or minus 0.6 percent FS.
    i. Minimum and maximum values:
      1) Volts (L-L), volts (L-N), current (L), watts, VARs, VA.
      2) PF (apparent and displacement).
      3) Frequency.
      4) THD-amps, THD-volts.
      5) Demand:
        a) Ampere, watt, VAR, VA.
    j. Trend analysis:
      1) 2 selectable parameters.
    k. Other features:
      1) 2 Discrete Inputs.
      2) 2 Discrete Outputs.
    l. Graphic LCD with LED backlight:
      1) 7 lines, 147 characters.

2.07 ACCESSORIES

A. Current transformers:
  1. Ring type current transformers:
    a. Suitable for service within low or medium voltage equipment as indicated on the Drawings.
    b. Designed to have a mechanical and thermal rating to withstand short-circuit current, stresses, and heating effects equal to the rating of the equipment of the application.
  2. Current ratio: As required, refer to drawings for applicable current ratings:
    a. It is the manufacturer’s responsibility to size the current transformers to ensure that they will not saturate under the maximum available fault current at the installed location based upon the fault current study as specified in Section 16305 - Electrical System Studies.
  3. Rated in accordance with IEEE C57.13.6 with accuracy of the current transformers suitable for relay accuracy class and rated for 200 percent burden for the required connected devices.

4. Identify polarity with standard marking or symbols.
5. Capable of carrying rated primary current continuously without damage.
6. Install secondary wiring from current transformers in a suitable wiring trough, or conduit to proper short-circuiting type terminal blocks for connection to relays, instruments, and other devices.

B. Potential transformers:
   1. Indoor dry type, single-phase, 60 hertz, with a minimum thermal capacity of not less than 400 volt-amperes at 55 Celsius rise above 40 Celsius ambient.
   2. Accuracy classification determined in accordance with IEEE C57.13.6, suitable for relay accuracy class, and 200 percent burden, for the required connected devices, with the secondary voltage 120 volts.
   3. Insulation levels as required for the equipment system voltage but not less than:
      a. 600 VAC, 10 kV BIL for 480 VAC systems.
   4. Identify polarity with standard markings or symbols.
   5. Connect transformer secondary to potential buses as required.
   6. Protect low voltage potential transformers on the primary side and secondary side with current-limiting fuses.

2.08 MIXES (NOT USED)

2.09 FABRICATION (NOT USED)

2.10 FINISHES (NOT USED)

2.11 SOURCE QUALITY CONTROL (NOT USED)

PART 3 EXECUTION

3.01 EXAMINATION (NOT USED)

3.02 PREPARATION (NOT USED)

3.03 INSTALLATION

A. As specified in Section 16050 - Common Work Results for Electrical.

B. Install power meters in the electrical equipment as indicated on the Drawings.

3.04 ERECTION, INSTALLATION, APPLICATION, CONSTRUCTION (NOT USED)

3.05 REPAIR/RESTORATION (NOT USED)

3.06 RE-INSTALLATION (NOT USED)

3.07 COMMISSIONING

A. As specified in Section 01756 - Commissioning.

3.08 FIELD QUALITY CONTROL

A. As specified in Section 16050 - Common Work Results for Electrical.

3.09 ADJUSTING (NOT USED)

3.10 CLEANING

A. As specified in Section 16050 - Common Work Results for Electrical.

3.11 PROTECTION

A. As specified in Section 16050 - Common Work Results for Electrical.

3.12 SCHEDULES (NOT USED)

END OF SECTION

THIS PAGE INTENTIONALLY LEFT BLANK

SECTION 16305

ELECTRICAL SYSTEM STUDIES

PART 1 GENERAL

1.01 SUMMARY

A. Section includes:
  1. Short-circuit fault analysis study.
  2. Protective device coordination study.
  3. Arc-flash hazard study.

1.02 REFERENCES

A. As specified in Section 16050 - Common Work Results for Electrical.

B. Institute of Electrical and Electronics Engineers (IEEE):
  1. 1584 - IEEE Guide for Performing Arc Flash Hazard Calculations.

C. National Fire Protection Association (NFPA).

1.03 DEFINITIONS

A. As specified in Section 16050 - Common Work Results for Electrical.

1.04 SYSTEM DESCRIPTION

A. General study requirements:
  1. Scope:
    a. The short-circuit fault analysis, protective device coordination, and arc-flash hazard studies shall include all equipment in the power distribution system including, but not limited to:
      1) Utility equipment.
      2) Switchgear.
      3) Switchboards.
      4) Generators.
      5) Transformers:
        a) Including all dry-type transformers.
      6) Motor control centers.
      7) Freestanding variable frequency drives and starters.
      8) Disconnect switches.
      9) Motors.
      10) Panelboards:
        a) Including all 240- and 208-volt systems.
      11) Vendor control panels.
      12) HVAC equipment.

- b. Study scenarios:
  - 1) The studies shall include all possible electrical system configurations, for example:
    - a) Operation on normal (utility) source.
    - b) Operation on generator source.
    - c) Main-breakers closed, tie-breaker open.
    - d) Either main-breaker open, tie-breaker closed.

2. Obtain, for all equipment, the required data for preparation of the study including, but not limited to:
   - a. Transformer kilovolt-ampere (kVA) and impedances.
   - b. Generator impedances.
   - c. Generator decrement curves.
   - d. Bus withstand ratings.
   - e. Cable and bus data.
   - f. Protective device taps, time dials, instantaneous pickups, and time-delay settings.
3. Obtain the Electric Utility information on the minimum and maximum available fault current, minimum and maximum utility impedances, utility protective device settings including manufacturer and model number, interrupting ratings, X/R ratios, and model information one level above the point of connection:
   - a. Utility tolerances and voltage variations.
4. The individual performing the studies shall visit the site and collect all necessary field data in order to perform and complete comprehensive electrical system studies.
5. Obtain equipment layouts and configurations from the manufacturer’s final submittal requirements and project layout drawings as required.
6. Bus and conductor data:
   - a. Use impedances of the actual installed or specified conductors, unless otherwise indicated.
   - b. Use cable and bus impedances calculated at 25 degrees Celsius, unless otherwise indicated.
   - c. Use 600-volt cable reactance based on typical dimensions of actual installed or specified conductors, unless otherwise indicated.
   - d. Use bus withstand values for all equipment having buses.
   - e. Use medium-voltage cable reactances based on typical dimensions of shielded cables with 133-percent insulation levels, unless otherwise indicated.
7. Motors:
   - a. Each motor shall be individually modeled:
     - 1) Grouping of motors for fault contribution current is not acceptable.
   - b. Motors with variable frequency drives may be assumed to have no contribution to fault current.
8. Use the equipment, bus, and device designations as indicated on the Drawings for all studies.

B. Short-circuit fault analysis study additional requirements:

1. The short-circuit fault analysis shall be performed and submitted in 2 phases:
   - a. Initial short-circuit fault analysis:
     - 1) Based on the Contract Documents and Electric Utility information.
     - 2) The initial short-circuit fault analysis study shall indicate the estimated available short-circuit current at the line side terminals of each piece of equipment covered by the scope of the study.

        3) This analysis is required before submittal of equipment to ensure equipment provided will meet the fault current requirements.
        4) Provide a list of assumptions used in the initial study.
    b. Final short-circuit fault analysis:
        1) The final short-circuit fault analysis shall modify the initial analysis as follows:
            a) Utilize the actual equipment provided on the project.
            b) Utilize conductor lengths based on installation.
            c) This study shall provide accurate as-built fault condition analysis and be used to generate arc flash safety labels and exact settings for coordination.

2. Calculate 3-phase bolted fault, line-to-line fault, line-to-ground fault, double line-to-ground fault, short-circuit 1/2 cycle momentary symmetrical and asymmetrical RMS, 1-1/2 to 4 cycle interrupting symmetrical RMS, and 30-cycle steady-state short-circuit current values at each piece of equipment in the distribution system.
3. Evaluate bus bracing, short-circuit ratings, fuse interrupting capacity and circuit-breaker-adjusted interrupting capacities against the fault currents, and calculate X/R values:
    a. Identify and document all devices and equipment as either inadequate or acceptable.
4. Calculate line-to-ground and double line-to-ground momentary short-circuit values at all buses having ground-fault devices.
5. Provide calculation methods, assumptions, one-line diagrams, and source impedance data, including utility X/R ratios, typical values, recommendations, and areas of concern.

C. Protective device coordination study additional requirements:
1. Furnish protective device settings for all functions indicated on the Drawings including, but not limited to:
    a. Current.
    b. Voltage:
        1) Provide settings for all voltage relays based upon actual utility and generator tolerances and specifications.
    c. Frequency:
        1) Provide settings for all frequency relays based upon actual utility and generator tolerances and specifications.
    d. Negative sequence.
    e. Reverse power.
    f. Machine protection functions:
        1) Provide settings for all motor and generator protective relays based on the manufacturer’s recommended protection requirements.
2. Provide log-log form time-current curves (TCCs) graphically indicating the coordination proposed for the system:
    a. Include with each TCC a complete title and one-line diagram with legend identifying the specific portion of the system covered by the particular TCC:
        1) Typical TCCs for identical portions of the system, such as motor circuits, are acceptable as allowed by the Engineer.
    b. Include a detailed description of each protective device identifying its type, function, manufacturer, and time-current characteristics:
        1) These details can be included on the TCC.

        c. Include a detailed description of each protective device tap, time dial, pickup, instantaneous, and time delay settings:
            1) These details can be included on the TCC.
    3. TCCs shall include all equipment in the power distribution system where required to demonstrate coordination. Include utility relay and fuse characteristics, medium-voltage equipment protective relay and fuse characteristics, low-voltage equipment circuit breaker trip device characteristics, transformer characteristics, motor and generator characteristics, and characteristics of other system load protective devices:
        a. Include all devices down to the largest branch circuit and largest feeder circuit breaker in each motor control center, main breaker in branch panelboards, and fused disconnect switches.
        b. Provide ground fault TCCs with all adjustable settings for ground fault protective devices.
        c. Include manufacturing tolerances and damage bands in plotted fuse and circuit breaker characteristics.
        d. On the TCCs, show transformer full load currents, transformer magnetizing inrush, ANSI transformer withstand parameters, and transformer damage curves.
        e. Cable damage curves.
        f. Terminate device characteristic curves at a point reflecting the maximum symmetrical or asymmetrical fault current to which the device is exposed based on the short-circuit fault analysis study.
        g. Coordinate time interval medium-voltage relay characteristics with upstream and downstream devices to avoid nuisance tripping.
    4. Site generation: When site generation (including cogeneration, standby, and emergency generators) is part of the electrical system, include phase and ground coordination of the generator protective devices:
        a. Show the generator decrement curve and damage curve along with the operating characteristic of the protective devices.
    5. Suggest modifications or additions to equipment rating or settings in a tabulated form.

D. Arc-flash hazard study additional requirements:
    1. Include the calculated arc-flash boundary and incident energy (calories/square centimeter) at each piece of equipment in the distribution system:
        a. Perform study with 15 percent arcing fault variation as defined by IEEE 1584.
        b. Perform arc-flash calculations at minimum and maximum utility and generator fault contributions.
        c. Perform arc-flash calculations for both the line side and load side of the switchgear, switchboard, motor control center, and panelboard main breakers.
        d. Perform arc-flash calculations for all short-circuit scenarios with all motors on for 3 to 5 cycles and with all motors off.
    2. Provide executive summary of the study results:
        a. Provide summary based upon worst case results.
    3. Provide a detailed written discussion and explanation of the tabulated outputs:
        a. Include all scenarios.

4. Provide alternative device settings to allow the Owner to select the desired functionality of the system:
   a. Minimize the arc-flash energy by selective trip and time settings for equipment maintenance purposes.
   b. Identify the arc-flash energy based upon the criteria of maintaining coordination and selectivity of the protective devices.

E. Electrical system study meetings:
   1. The individual conducting the short-circuit fault analysis, protective device coordination, and the arc-flash hazard studies shall meet with the Owner 2 times.
   2. The purpose of the 2 meetings is as follows:
      a. Preliminary results meeting:
         1) This meeting will be held after the studies have been completed, reviewed, and accepted by the Engineer.
         2) The purpose of this meeting is to inform the Owner of the results of the study and impacts on normal operation and maintenance including:
            a) Protective device coordination problems and recommended solutions.
            b) Explanation of the arc-flash hazard study results and its potential impact on operations.
            c) Recommendations for reduction of arc-flash category levels including reduction of protective device settings or changes in operational practices.
      b. Final meeting:
         1) Discuss changes to the studies based on the previous meeting.
         2) Discuss with the Owner how changes to the electrical system may change the arc-flash hazard category.
         3) Deliver the final electrical system studies report.
   3. The meetings will be at the Owner's facility:
      a. Provide a minimum of 3 weeks' notice to the Owner and Engineer in advance of the projected meeting date.
      b. Submit a draft of the meeting agenda when each meeting is requested.
   4. Meeting materials:
      a. Prepare and provide the following materials:
         1) Meeting agenda. Include, at a minimum, the scope of the meeting, estimated time length for the meeting, and meeting goals.
         2) 3 copies of the project one-line diagrams for the initial meeting.
         3) 3 copies of the submitted studies.

F. By virtue of the fact that this is a professional study, the Owner reserves the right to modify the requirements of the study to comply with its operational requirements. The protective device coordination study and the arc-flash hazard study shall be modified based on the results of the meetings with the Owner.

1.05 SUBMITTALS

A. Furnish submittals as specified in Sections 01330 - Submittal Procedures and 16050 - Common Work Results for Electrical.

B. Initial studies and reports:
  1. Include the following in the initial short-circuit current report:
    a. List of all devices included in the studies.
    b. A description of all operating scenarios.
    c. Form and format of arc-flash labels.

C. Final studies and reports:
  1. Format and quantity:
    a. Provide 6 bound copies of all final reports.
    b. Provide 3 complete sets of electronic files on CD or DVD media, including the electrical system model(s), configuration files, custom libraries, and any other files used to perform the studies and produce the reports. Also provide an electronic version of the bound reports in PDF format. All study files must be provided to the Owner in their native format to allow the Owner the ability to update calculations as changes are made to the system.
    c. Provide the number of copies specified in Section 01330 - Submittal Procedures.
  2. Include the sections below in the final report:
    a. Copies of correspondence and data obtained from the electric utility company.
    b. Letter certifying the inspection and verification of existing equipment.
    c. One-line diagrams:
      1) The following information shall be included at a minimum:
        a) Motor horsepower.
        b) Transformer data:
          (1) kVA.
          (2) Configuration.
        c) Cable data:
          (1) Insulation.
          (2) Size.
          (3) Length.
      2) One-line diagrams shall be fully legible at 11-inch by 17-inch size.
    d. Include in the short-circuit fault analysis study:
      1) Descriptions, purpose, basis, assumptions, recommendations, and scope of the study.
      2) Normal system connections and those that result in maximum fault conditions.
      3) Tabulation of circuit breaker, fuse, and other protective device ratings compared to maximum calculated short-circuit duties.
      4) Fault current calculations for the cases run including a definition of terms and guide for interpretation of computer software printouts.
    e. Protective device coordination study shall include:
      1) Descriptions, purpose, basis, assumptions, recommendations, and scope of the study.
      2) List all requirements used in the selection and setting criteria for any protective devices.
      3) Manufacturer’s time-current curves for circuit breakers, fuses, motor circuit protectors, and other protective devices for all new equipment.
      4) TCCs graphically indicating the coordination proposed for the system on log-log graphs. At least 3 of the copies shall be in color.

            5) Tabulation of relay, fuse, circuit breaker, and other protective devices in graphical form with a one-line diagram to display area coordination.
            6) Where coordination could not be achieved, an explanation shall be included in the report to support the statement along with recommendations to improve coordination. Recommended equipment modifications or settings shall be in a tabulated form.
        f. Include in the arc-flash hazard study:
            1) Descriptions, purpose, basis, assumptions, recommendations, and scope of the study.
            2) Normal system connections and those that result in maximum arc-flash conditions.
            3) Arc-flash raw data, calculations, and assumptions.
            4) Arc-flash label data:
                a) Identifying the content of each label.
                b) Identifying the location of each label.

D. Certification:
    1. Submit written certification, sealed and signed by the professional engineer conducting the study, equipment supplier, and electrical subcontractor stating that the data used in the study is correct.

E. Submit the credentials of the individual(s) performing the study and the individual in responsible charge of the study.

F. The Engineer will review all studies and reports. After review, the Engineer will make recommendations and/or require changes to be made to the short-circuit fault analysis, protective device coordination, or arc-flash hazard studies. These changes shall be provided as part of the scope of work.

G. Submit course outline for Owner’s training.

1.06 QUALITY ASSURANCE

A. As specified in Section 16050 - Common Work Results for Electrical.

B. Qualifications of the entity responsible for electrical system studies:
    1. The studies shall be performed, stamped, and signed by a professional engineer registered in the state where the project is located.
    2. A minimum of 5 years of experience in power system analysis is required for the individual in responsible charge of the studies.
    3. The short-circuit fault analysis, protective device coordination, and arc-flash hazard studies shall be performed with the aid of a digital computer program:
        a. Point-to-point calculations are not acceptable.

C. The study shall be performed by the equipment manufacturer of the main electrical gear.

1.07 DELIVERY, STORAGE, AND HANDLING (NOT USED)

1.08 PROJECT/SITE CONDITIONS (NOT USED)

1.09 SEQUENCING

A. Submit the initial short-circuit fault analysis study before submittal of any electrical equipment.

B. Initial electrical system study meeting.

C. Submit the preliminary short-circuit fault analysis, protective device coordination, and arc-flash hazard studies.

D. Second electrical system study meeting for preliminary results.

E. Final arc-flash meeting and final short-circuit fault analysis, protective device coordination, and arc-flash hazard studies.

F. Label equipment with approved arc-flash labels.

G. Owner’s training.

1.10 SCHEDULING (NOT USED)

1.11 WARRANTY (NOT USED)

1.12 SYSTEM START-UP (NOT USED)

1.13 OWNER’S INSTRUCTIONS (NOT USED)

1.14 MAINTENANCE (NOT USED)

PART 2 PRODUCTS

2.01 MANUFACTURERS

A. Electrical system study software: One of the following or equal:
   1. Operation Technology, Inc., ETAP.
   2. SKM Systems Analysis, Powertools.
   3. EasyPower.

2.02 EXISTING PRODUCTS (NOT USED)

2.03 MATERIALS (NOT USED)

2.04 MANUFACTURED UNITS (NOT USED)

2.05 EQUIPMENT (NOT USED)

2.06 COMPONENTS

A. Arc-flash hazard labels:
   1. Dimensions:
      a. Minimum 5 inches by 3.5 inches.

2. Materials:
    a. Polyester with polyvinyl polymer over-laminate.
    b. Self-adhesive.
    c. Resistant to:
        1) UV.
        2) Chemicals and common cleaning solvents.
        3) Scuffing.
        4) Wide temperature changes.
3. Contents:
    a. Short-circuit bus identification.
    b. Calculated incident energy (calories/square centimeter) range:
        1) Based on worst-case study results.
    c. Personnel protective equipment level number.
    d. Arc-flash protection boundary.
    e. Shock hazard boundary:
        1) The Contractor may provide separate labels for indication of the shock hazard boundary.
    f. Description of the combined level of personnel protective equipment.
4. Color scheme:
    a. For locations above 40 calories/square centimeter:
        1) White label with red “DANGER” strip across the top.
        2) Black lettering.
    b. For locations below 40 calories/square centimeter:
        1) White label with orange “WARNING” strip across the top.
        2) Black lettering.

2.07 ACCESSORIES (NOT USED)

2.08 MIXES (NOT USED)

2.09 FABRICATION (NOT USED)

2.10 FINISHES (NOT USED)

2.11 SOURCE QUALITY CONTROL (NOT USED)

PART 3 EXECUTION

3.01 EXAMINATION (NOT USED)

3.02 PREPARATION (NOT USED)

3.03 INSTALLATION

A. As specified in Section 16050 - Common Work Results for Electrical.

B. After review and acceptance of the arc-flash hazard study by the Engineer, install all arc-flash hazard labels:
1. Install labels at all locations required by NFPA, ANSI, or IEEE standards.
2. At a minimum, install labels in the following locations:
    a. The front of each main or incoming service compartment.
    b. The front of each low-voltage switchgear section.

c. The front of each medium-voltage circuit breaker door.
d. The front of each accessible auxiliary or conductor compartment.
e. Each accessible rear or side vertical section.
f. Each motor control center vertical section.
g. Each panelboard covered by the study.
h. Each control panel, individual starter or VFD, or other equipment covered by the scope of the study.

3. Install labels prior to equipment energization.

C. After review and acceptance of the arc-flash hazard study and protective device coordination study by the Engineer, adjust protective device settings per final study prior to equipment energization.
   1. Devices that require power for configuration may be set during energization, but before any subfed loads are energized.
   2. Ensure that settings for upstream equipment are set prior to energizing downstream devices.

3.04 ERECTION, INSTALLATION, APPLICATION, AND CONSTRUCTION (NOT USED)

3.05 REPAIR/RESTORATION (NOT USED)

3.06 RE-INSTALLATION (NOT USED)

3.07 COMMISSIONING

A. As specified in Section 01756 - Commissioning.

3.08 FIELD QUALITY CONTROL

A. As specified in Section 16050 - Common Work Results for Electrical.

B. The individual performing the arc-flash hazard study shall direct the installation of the arc-flash hazard labels:
   1. Remove and replace any improperly applied labels.
   2. Repair the equipment finish damaged by removal of any label.
   3. Install labels level or plumb across the entire dimension of the label.

3.09 ADJUSTING (NOT USED)

3.10 CLEANING (NOT USED)

3.11 PROTECTION (NOT USED)

3.12 SCHEDULES (NOT USED)

END OF SECTION

SECTION 16411

DISCONNECT SWITCHES

PART 1 GENERAL

1.01 SUMMARY

A. Section includes:
   1. Fusible and non-fusible disconnect switches.

1.02 REFERENCES

A. As specified in Section 16050 - Common Work Results for Electrical.

B. National Electric Manufacturer's Association (NEMA):
   1. 250 - Enclosures for Electrical Equipment.
   2. KS 1-2001 - Enclosed and Miscellaneous Distribution Equipment Switches (600 Volts Maximum).

C. Underwriters Laboratories Inc. (UL):
   1. 20 - General-Use Snap Switches.
   2. 98 - Enclosed and Dead-Front Switches.
   3. 508 - Standard for Industrial Control Equipment.

1.03 DEFINITIONS

A. As specified in Section 16050 - Common Work Results for Electrical.

B. Specific definitions:
   1. Safety switches and disconnect switches are to be considered synonymous.

1.04 SYSTEM DESCRIPTION

A. Provide heavy-duty type disconnect switches as indicated on the Drawings and specified in the Contract Documents.

B. Provide disconnect switches with the number of poles, voltage, current, short circuit, and horsepower ratings as required by the load and the power system.

1.05 SUBMITTALS

A. Furnish submittals as specified in Sections 01330 - Submittal Procedures and 16050 - Common Work Results for Electrical.

B. Product data:
   1. Manufacturer.
   2. Manufacturer's specifications and description.
   3. Ratings:
      a. Voltage.
      b. Current.

        c. Horsepower.
        d. Short circuit rating.
    4. Fused or non-fused.
    5. NEMA enclosure type.
    6. Dimensions:
        a. Height.
        b. Width.
        c. Depth.
    7. Weight.
    8. Cross-referenced to the disconnect schedule indicated on the Drawings.

C. Shop drawings:
    1. Manufacturer's installation instructions:
        a. Indicate application conditions and limitations of use stipulated by product testing agency specified under Quality Assurance, Regulatory Requirements below.
        b. Include instructions for storage, handling, protection, examination, preparation, installation, and operation of product.
    2. Identify motor or equipment served by each switch; indicate nameplate inscription.

D. Installation instructions:
    1. Provide anchorage instructions and requirement based on the seismic requirements at the Project Site as specified in Section 16050 - Common Work Results for Electrical and calculations:
        a. Stamped by a professional engineer registered in the state where the Project is being constructed.

1.06 QUALITY ASSURANCE

A. As specified in Section 16050 - Common Work Results for Electrical.

B. Regulatory requirements:
    1. NEMA KS1- Enclosed and Miscellaneous Distribution Switches (600 V Maximum).
    2. UL 98 - Enclosed and Dead-Front Switches.

C. Disconnect switches shall be UL listed and labeled.

1.07 DELIVERY, STORAGE, AND HANDLING

A. As specified in Section 16050 - Common Work Results for Electrical.

1.08 PROJECT OR SITE CONDITIONS

A. As specified in Section 16050 - Common Work Results for Electrical.

1.09 SEQUENCING

A. Conduct the initial fault current study as specified in Section 16305 - Electrical System Studies and submit results for Engineer’s review.

B. After successful review of the initial fault current study, submit complete equipment submittal.

1.10 SCHEDULING (NOT USED)

1.11 WARRANTY

A. As specified in Section 16050 - Common Work Results for Electrical.

1.12 SYSTEM START-UP

A. As specified in Section 16050 - Common Work Results for Electrical.

1.13 OWNER'S INSTRUCTIONS (NOT USED)

1.14 MAINTENANCE (NOT USED)

PART 2 PRODUCTS

2.01 MANUFACTURERS

A. One of the following or equal:
   1. Schneider Electric.

2.02 EXISTING PRODUCTS (NOT USED)

2.03 MATERIALS (NOT USED)

2.04 MANUFACTURED UNITS (NOT USED)

2.05 EQUIPMENT

A. Switch mechanism:
   1. Quick-make, quick-break heavy-duty operating mechanisms:
      a. Provisions for padlocking the switch in the OFF position.
      b. A minimum of 90-degree handle travel position between OFF and ON positions:
         1) Provide handle position indicators to identify the handle position.
      c. Full cover interlock to prevent opening of the switch door in the ON position and to prevent closing the switch mechanism with the door open:
         1) With an externally operated override.

B. Switch interior:
   1. Switch blades visible when the switch is OFF and the cover is open.
   2. Lugs:
      a. Front accessible.
      b. Removable.
      c. UL listed for 60/75-degree Celsius copper conductors.
   3. Current carrying parts completely plated to resist corrosion.
   4. Removable arc suppressors to facilitate easy access to line side lugs.
   5. Furnish equipment ground kits for every switch.

C. Ratings:
   1. UL horsepower rated for AC or DC with the rating not less than the load served.
   2. Current:
      a. 30 to 1,200 amperes.
   3. Voltage:
      a. 250 volts AC, DC.
      b. 600 volts (30 A to 200 A, 600 volts DC).
   4. Poles:
      a. 2, 3, 4, and 6 poles.
   5. UL listed short circuit ratings:
      a. 10,000 RMS symmetrical amperes when used with or protected by Class H or K fuses (30-600 amperes).
      b. 200,000 RMS symmetrical amperes when used with or protected by Class R or J fuses (30-600 amperes employing appropriate fuse rejection).
      c. 200,000 RMS symmetrical amperes when used with or protected by Class L fuses (800-1,200 amperes).
   6. Where not indicated on the Drawings, provide switches with the NEMA ratings specified in Section 16050 - Common Work Results for Electrical for the installed location.

D. Size, fusing and number poles as indicated on the Drawings or as required:
   1. Provide solid neutral where indicated on the Drawings.

2.06 COMPONENTS (NOT USED)

2.07 ACCESSORIES

A. Disconnect switches to have provisions for a field installable “B” type electrical interlock for position indication as indicated on the Drawings.

B. Disconnect switches to have provisions for a field installed insulated groundable neutral kit as indicated on the Drawings.

C. Disconnect switches to be provided with auxiliary contacts, as indicated on the Drawings.

D. NEMA Type 7 and 9 enclosures furnished with drain and breather kit when used in outdoor applications.

2.08 MIXES (NOT USED)

2.09 FABRICATION (NOT USED)

2.10 FINISHES (NOT USED)

2.11 SOURCE QUALITY CONTROL (NOT USED)

PART 3 EXECUTION

3.01 EXAMINATION (NOT USED)

3.02 PREPARATION (NOT USED)

3.03 INSTALLATION

A. As specified in Section 16050 - Common Work Results for Electrical.

B. Install the equipment in accordance with the accepted installation instructions and anchorage details to meet the seismic and wind load requirements at the Project site.

C. General:
   1. Use Myers hubs or bolt-on hubs for all conduit penetrations on NEMA Type 12, Type 4, and Type 4X enclosures.
   2. Provide all mounting brackets, stands, supports and hardware as required:
      a. Match finish and materials for all brackets, stands, and hardware with the switch installed.
      b. Provide adequate supporting pillar(s) for disconnect switches in accordance with the approved seismic calculations, and locate aboveground or above decks, where there is no structural wall or surface for box.
   3. When possible, mount switches rigidly to exposed building structure or equipment structural members:
      a. For NEMA Type 4 and Type 4X locations, maintain a minimum of 7/8 inch air space between the enclosure and supporting surface.
      b. When mounting on preformed channel, position channel vertically so that water may freely run behind the enclosure.
   4. Provide a nameplate for each disconnect switch:
      a. Provide per requirements specified in Section 16075 - Identification for Electrical Systems.
      b. Identify voltage, circuit, fuse size, and equipment served on the nameplate.

3.04 ERECTION, INSTALLATION, APPLICATION, CONSTRUCTION (NOT USED)

3.05 REPAIR/RESTORATION (NOT USED)

3.06 RE-INSTALLATION (NOT USED)

3.07 COMMISSIONING

A. As specified in Section 01756 - Commissioning.

3.08 FIELD QUALITY CONTROL

A. As specified in Section 16050 - Common Work Results for Electrical.

3.09 ADJUSTING (NOT USED)

3.10 CLEANING

A. As specified in Section 16050 - Common Work Results for Electrical.

3.11 PROTECTION

A. As specified in Section 16050 - Common Work Results for Electrical.

3.12 SCHEDULES (NOT USED)

END OF SECTION

SECTION 16412

LOW VOLTAGE MOLDED CASE CIRCUIT BREAKERS

PART 1 GENERAL

1.01 SUMMARY

A. Section includes:
   1. Low voltage molded case circuit breakers.

1.02 REFERENCES

A. As specified in Section 16050 - Common Work Results for Electrical.

B. National Electrical Manufacturers Association (NEMA):
   1. AB 3. - Molded Case Circuit Breakers and Their Application.

C. Underwriter’s Laboratories (UL):
   1. 489 - Molded-Case Circuit Breakers, Molded-Case Switches, and Circuit-Breaker Enclosures.
   2. 943 - Ground Fault Circuit Interrupters.

1.03 DEFINITIONS

A. As specified in Section 16050 - Common Work Results for Electrical.

B. In accordance with UL 489.

1.04 SYSTEM DESCRIPTION

A. Molded case thermal magnetic or motor circuit protector type circuit breakers as indicated on the Drawings and connected to form a completed system.

1.05 SUBMITTALS

A. Furnish submittals as specified in Sections 01330 - Submittal Procedures and 16050 - Common Work Results for Electrical.

B. Product data:
   1. Catalog cut sheets.
   2. Manufacturer’s time-current curves for all molded case circuit breakers furnished.

1.06 QUALITY ASSURANCE

A. As specified in Section 16050 - Common Work Results for Electrical.

B. Low voltage molded case circuit breakers shall be UL listed and labeled.

1.07 DELIVERY, STORAGE AND HANDLING

A. As specified in Section 16050 - Common Work Results for Electrical.

1.08 PROJECT OR SITE CONDITIONS

A. As specified in Section 16050 - Common Work Results for Electrical.

1.09 SEQUENCING (NOT USED)

1.10 SCHEDULING (NOT USED)

1.11 WARRANTY

A. As specified in Section 16050 - Common Work Results for Electrical.

1.12 SYSTEM START-UP

A. As specified in Section 16050 - Common Work Results for Electrical.

1.13 OWNER’S INSTRUCTIONS (NOT USED)

1.14 MAINTENANCE (NOT USED)

PART 2 PRODUCTS

2.01 MANUFACTURERS

A. One of the following or equal:
  1. Schneider Electric.

2.02 EXISTING PRODUCTS (NOT USED)

2.03 MATERIALS (NOT USED)

2.04 MANUFACTURED UNITS

A. General:
  1. Conforming to UL 489.
  2. Operating mechanism:
    a. Quick-make, quick-break, non-welding silver alloy contacts.
    b. Common Trip, Open and Close for multi-pole breakers such that all poles open and close simultaneously.
    c. Mechanically trip free from the handle.
    d. Trip indicating handle - automatically assumes a position midway between the manual ON and OFF positions to clearly indicate the circuit breaker has tripped.
    e. Lockable in the "OFF" position.
  3. Arc extinction:
    a. In arc chutes.

4. Voltage and current ratings:
    a. Minimum ratings as indicated on the Drawings.
    b. Minimum frame size 100A.
5. Interrupting ratings:
    a. Minimum ratings as indicated on the Drawings.
    b. Modify as required to meet requirements of the short circuit fault analysis - as specified in Section 16305 - Electrical System Studies.
    c. Not less than the rating of the assembly (panelboard, switchboard, motor control center, etc.).

B. Motor circuit protectors:
1. Instantaneous only circuit breaker as part of a listed combination motor controller.
2. Each pole continuously adjustable in a linear scale with ‘LO’ and ‘HI’ settings factory calibrated.

2.05 EQUIPMENT (NOT USED)

2.06 COMPONENTS

A. Terminals:
1. Line and load terminals suitable for the conductor type, size, and number of conductors in accordance with UL 489.

B. Case:
1. Molded polyester glass reinforced.
2. Ratings clearly marked.

C. Trip units:
1. Provide thermal magnetic or solid-state trip units as indicated on the Drawings.
2. Thermal magnetic:
    a. Instantaneous short circuit protection.
    b. Inverse time delay overload.
    c. Ambient or enclosure compensated by means of a bimetallic element.
3. Solid state:
    a. With the following settings as indicated on the Drawings.
        1) Adjustable long time current setting.
        2) Adjustable long time delay.
        3) Adjustable short time pickup.
        4) Adjustable short time delay.
        5) Adjustable instantaneous pickup.
        6) Adjustable ground fault pickup as indicated on the Drawings.
        7) Adjustable ground fault delay as indicated on the Drawings.

D. Provide ground fault trip devices as indicated on the Drawings.

E. Molded case circuit breakers for use in panelboards:
1. Bolt-on type:
    a. Plug-in type breakers are not acceptable.
2. Ground fault trip devices as indicated on the Drawings.

2.07 ACCESSORIES

A. Shunt trip:
   1. Provide a trip coil to remotely open breaker as indicated on the Drawings.

B. Lockable handle:
   1. Provide assembly to lock operating handle in ‘OPEN’ position.
   2. Where a molded case circuit breaker is located in a dedicated enclosure, provide a lockable handle. Reference the Electrical Specifications for additional locking requirements associated with other mounting installations.

C. Key interlocks:
   1. Provide key operated interlocks to ensure safe switching procedures as indicated on the Drawings.

2.08 MIXES (NOT USED)

2.09 FABRICATION (NOT USED)

2.10 FINISHES (NOT USED)

2.11 SOURCE QUALITY CONTROL

A. Test breakers in accordance with:
   1. UL 489.
   2. Manufacturer’s standard testing procedures.

PART 3 EXECUTION

3.01 EXAMINATION (NOT USED)

3.02 PREPARATION (NOT USED)

3.03 INSTALLATION

A. Install breakers to correspond to the accepted shop drawings.

3.04 ERECTION, INSTALLATION, APPLICATION, CONSTRUCTION (NOT USED)

3.05 REPAIR/RESTORATION (NOT USED)

3.06 RE-INSTALLATION (NOT USED)

3.07 COMMISSIONING

A. As specified in Section 01756 - Commissioning.

3.08 FIELD QUALITY CONTROL

A. As specified in Section 16050 - Common Work Results for Electrical.

3.09 ADJUSTING

A. Adjust trip settings in accordance with Protective Device Coordination Study as accepted by the Engineer and in accordance with manufacturer's recommendations.

B. Adjust motor circuit protectors in accordance with NEC and the manufacturer's recommendation based on the nameplate values of the installed motor.

3.10 CLEANING (NOT USED)

3.11 PROTECTION

A. As specified in Section 16050 - Common Work Results for Electrical.

3.12 SCHEDULES (NOT USED)

END OF SECTION

SECTION 16422

MOTOR STARTERS

PART 1 GENERAL

1.01 SUMMARY

A. Section includes:
   1. Motor starters and contactors.

1.02 REFERENCES

A. As specified in Section 16050 - Common Work Results for Electrical.

B. International Electrotechnical Commission (IEC):
   1. 60 947-4 - Low-Voltage Switchgear and Control Gear.
   2. 801-1 - Electromagnetic Compatibility for Industrial-Process Measurement and Control Equipment - Part 1: General Information.

C. National Electrical Manufacturer's Association (NEMA):
   1. ICS 2 - Industrial Control and Systems: Controllers, Contactors, and Overload Relays Rated 600 V.

D. Underwriters Laboratories (UL):
   1. 508 - Standard for Industrial Control Equipment.
   2. 508A - Standard for Industrial Control Panels.

1.03 DEFINITIONS

A. As specified in Section 16050 - Common Work Results for Electrical.

B. Specific definitions and abbreviations:
   1. FVNR: Full voltage non-reversing.
   2. RVSS: Reduced voltage solid state.
   3. Overload relay class: A classification of an overload relay time current characteristic by means of a number which designates the maximum time in seconds at which it will operate when carrying a current equal to 600 percent of its current rating.

1.04 SYSTEM DESCRIPTION

A. General requirements:
   1. Starters for motor control centers, individual enclosed starters, or control panels.

1.05 SUBMITTALS

A. Furnish submittals as specified in Sections 01330 - Submittal Procedures and 16050 - Common Work Results for Electrical:
   1. Submit motor starter data with equipment submittal.

B. Product data:
  1. Manufacturer.
  2. Catalog cut sheets.
  3. Technical information.
  4. Complete nameplate schedule.
  5. Complete bill of material.
  6. List of recommended spare parts.
  7. Confirmation that the overload relay class for each starter meets the requirements of the equipment and motor supplier.
  8. Electrical ratings:
    a. Phase.
    b. Wire.
    c. Voltage.
    d. Ampacity.
    e. Horsepower.
  9. Individually enclosed starters:
    a. Dimensions:
      1) Height.
      2) Width.
      3) Depth.
      4) Weight.
    b. Enclosure information:
      1) NEMA rating.
      2) Materials.
  10. Furnish circuit breaker submittals as specified in Section 16412 - Low Voltage Molded Case Circuit Breakers.

C. Shop drawings:
  1. Elementary and schematic diagrams:
    a. Provide 1 diagram for every starter and contactor.
    b. Indicate wire numbers for all control wires on the diagrams:
      1) Wire numbering as specified in Section 16075 - Identification for Electrical Systems.
    c. Indicate interfaces with other equipment on the drawings.
  2. Individually enclosed starters:
    a. Layout drawings:
      1) Complete dimensioned component and starter unit layout drawings.
      2) Allowable top and bottom conduit windows.

D. Installation instructions:
  1. Detail the complete installation of the individually enclosed starters including rigging, moving, and setting into place.
  2. For equipment installed in structures designated as seismic design category A or B:
    a. Provide manufacturer’s installation instructions and anchoring details for connecting equipment to supports and structures.

E. Operation and maintenance manuals:
  1. Submit complete operating and maintenance instructions presenting full details for care and maintenance of equipment furnished or installed under this Section. Including but not limited to:
    a. Electrical ratings:
      1) Phase.
      2) Wire.
      3) Voltage.
      4) Ampacity.
    b. Complete bill of material.
    c. Manufacturer's operating and maintenance instructions starter and/or contactor component parts, including:
      1) Protective devices (fuses, breakers, overload relays, heater elements, etc.).
      2) Pilot devices.
    d. Complete renewal parts list.
    e. As-built drawings:
      1) Furnish as-built drawings for each starter and contactor indicating final:
        a) Wire numbers.
        b) Interfaces with other equipment.
      2) 11-inch by 17-inch format.

F. Certifications:
  1. Provide manufacturer's certification that the reduced voltage solid state starter will reliably control the acceleration and deceleration of the driven load at the installed conditions:
    a. Failure of the manufacturer to provide said certification will be interpreted to mean that the manufacturer has agreed that the reduced voltage solid state starter is matched to the driven load at the installed conditions and will function without fault.
    b. If the reduced voltage solid-state starter fails to perform as desired, replace or modify the reduced voltage solid-state starter in order to achieve the desired operational conditions, as directed by the Engineer.

1.06 QUALITY ASSURANCE

A. As specified in Section 16050 - Common Work Results for Electrical.

B. Regulatory requirements:
  1. All starters and components shall be UL listed and labeled:
    a. UL 508 - Industrial Control Equipment.
    b. UL 508A - Industrial Control Panels.
  2. NEMA ICS 2 - Industrial Control and System Controllers; Contactors and Overload Relays Rated: 600 Volts.
  3. Combination starters shall be UL listed and labeled.

1.07 DELIVERY, STORAGE, AND HANDLING

A. As specified in Section 16050 - Common Work Results for Electrical.

1.08 PROJECT OR SITE CONDITIONS

A. As specified in Section 16050 - Common Work Results for Electrical.

1.09 SEQUENCING (NOT USED)

1.10 SCHEDULING

A. Reduced voltage solid state starters:
   1. Submit certification that the RVSS will reliably accelerate and decelerate the driven load at the installed conditions as part of the equipment submittal.
   2. RVSS start-up and testing by manufacturer after connection to equipment.
   3. RVSS training by manufacturer after start-up and testing, and before plant commissioning.

1.11 WARRANTY

A. As specified in Section 16050 - Common Work Results for Electrical.

1.12 SYSTEM START-UP

A. As specified in Section 16050 - Common Work Results for Electrical.

B. RVSS:
   1. Provide the services of the manufacturer's technical representative for start-up, adjustment, and troubleshooting, a minimum of 2 hours per starter at the Owner's facility.

1.13 OWNER’S INSTRUCTIONS (NOT USED)

1.14 MAINTENANCE

A. Spare parts:
   1. Provide the following spare parts, suitably packaged and labeled with the corresponding equipment number:
      a. 1 spare fuse of each size and type per starter.

PART 2 PRODUCTS

2.01 MANUFACTURERS

A. One of the following or equal:
   1. NEMA starters and contactors:
      a. Schneider Electric.
   2. Reduced voltage solid state starters:
      a. Schneider Electric.

2.02 EXISTING PRODUCTS (NOT USED)

2.03 MATERIALS (NOT USED)

2.04 MANUFACTURED UNITS

A. General:
   1. Provide combination type starters with motor circuit protector or thermal-magnetic circuit breaker and control power transformer with ratings as indicated on the Drawings.
   2. NEMA size, design, and rated:
      a. NEMA Size 1 minimum.
   3. Coordinate motor circuit protector, thermal magnetic circuit breaker, or fusible disconnect, and overload trip ratings with nameplate horsepower and current ratings of the installed motor:
      a. If motors provided are different in horsepower rating than those specified or indicated on the Drawings, provide starters coordinated to the actual motors furnished.
   4. Provide starters NEMA Size 2 and larger with arc quenchers on load breaking contacts.
   5. Mount extended overload reset buttons to be accessible for operation without opening starter enclosure door.

B. Full voltage starters (FVNR):
   1. Across-the-line full voltage magnetic starters.
   2. Rated for 600 volts.
   3. Electrical characteristics as indicated on the Drawings.
   4. Provide positive, quick-make, quick-break mechanisms, pad lockable enclosure doors.
   5. Furnish starter with bi-metallic overload relays.
   6. Double-break silver alloy contacts.

C. RVSS:
   1. Manufactured and tested in accordance with the applicable requirements of IEEE, UL, and NEMA, including the following:
      a. Dielectric withstand per UL 508.
      b. Noise and RF immunity per NEMA ICS-2-230.
   2. Furnish with a motor circuit protector or thermal magnetic circuit breaker as indicated on the Drawings.
   3. Provide protection against internal faults and high SCR temperature during operation of the motor including starting, running (except when bypassed), and stopping modes.
   4. Capable of continuously delivering full rated current of the motor plus the motor service factor in ambient temperatures from 0 degrees Celsius to 40 degrees Celsius at the installed altitude.
   5. Provide a magnetically operated bypass contactor in parallel with the solid state starter:
      a. The bypass contactor to energize when the motor has reached full speed:
         1) The electronic overload protection circuits must be fully functional with the bypass contactor closed.
   6. RVSS control module requirements:
      a. Microcomputer based and contains the required circuitry to drive the power semiconductors in the power section of the starter.
      b. Integrally mounted on the power section and requires no additional panel space or wiring.
      c. Mounted for easy wiring, testing, service, and replacement.

    - d. Provide 3-phase current sensing.
    - e. Quick disconnect plug-in connectors for current transformer inputs, line and load voltage inputs, and SCR gate firing output circuits.
    - f. Operates on power supplied from a control power transformer.
    - g. Phase insensitive or with phase rotation protection.
    - h. Control modes:
        - 1) Soft start with adjustable linear ramp time and a “kick start” or “boost” feature to provide a short time (typically 0.1 seconds) application of approximately full voltage.
        - 2) Soft start with adjustable linear ramp time, with a current limit:
            - a) The current limit shall be adjustable over the range of 2 to 4 times normal full load current.
        - 3) Reverse voltage ramp (line voltage to zero voltage):
            - a) Adjustable from 2 to 30 seconds to provide smooth stop.
            - b) Automatic shutdown at end of voltage ramp.
    - i. Protective functions:
        - 1) Single phase protection.
        - 2) Under voltage protection.
        - 3) Short circuit electronic trip overcurrent protection. Time not to exceed 3 cycles.
        - 4) Inverse time running overcurrent protection.
        - 5) Auxiliary trip circuitry.
        - 6) Gate firing circuit lockout protection on trip.
        - 7) Jam and stall detection.
        - 8) Fault relay lockout protection.
        - 9) 100 percent to 130 percent full load running current trip adjustment.
        - 10) 100 percent to 450 percent of starting current limit adjustment.
        - 11) Dwell time at current limit with ramp continuation after acceleration.
        - 12) Individual light emitting diodes (LEDs) for trip and phase loss.
        - 13) Minimum and maximum initial starting voltage adjustments.
        - 14) Initial torque adjustment.
- 7. RVSS power section requirements:
    - a. 3 sets of back-to-back phase-controlled power semiconductors:
        - 1) Minimum repetitive peak inverse voltage of 1,500 volts at 480 VAC.
        - 2) Resistor/capacitor snubber networks to prevent false firing of the SCRs.
        - 3) Equipped with individual heat sink assemblies.
        - 4) Provide high-speed fuses for protection of the SCR stacks against short circuit conditions.
    - b. Provide metal oxide varistors for surge protection on the line side power terminal connections:
        - 1) Rated for a minimum of 120 joules.
    - c. Capable of supplying the following current levels:
        - 1) 600 percent of full load current for a minimum of 10 seconds.
        - 2) 450 percent of full load for a minimum of 30 seconds.
    - d. Furnish ground lugs, one for incoming and one for outgoing ground connections.
    - e. Furnish pressure type terminals for top or bottom entry power terminations.

8. Remote indicators:
    a. Provide Form C dry contacts for remote indication of:
        1) Internal fault error.
        2) Undervoltage.
        3) Overvoltage.
        4) Phase reversal.
        5) Phase loss.
        6) Overload.
        7) Frequency out of range.
        8) Excessive starts per hour.
        9) Drive electronics over temperature.
        10) Stall.
        11) Jam.
        12) System failure.
        13) Starter failure.
        14) Run status.
        15) Full speed.

2.05 COMPONENTS

A. Molded case circuit breakers:
   1. Circuit breaker type and ratings as indicated on the Drawings.
   2. Provide as specified in Section 16412 - Low Voltage Molded Case Circuit Breakers.

B. Contactors:
   1. NEMA size as indicated on the Drawings.
   2. Electrically held:
       a. For lighting loads designed to withstand the initial inrush currents of ballast and lamp loads.
   3. Factory adjusted and chatter free.
   4. Auxiliary contacts:
       a. Contact ratings as per NEMA A 600 rating:
           1) Auxiliary contacts rated 10 amps at 600 volts.
       b. Provide all contacts indicated on the Drawings, and any additional contacts required for proper operation.
       c. Provide at least 1 normally open and 1 normally closed spare auxiliary contact.
   5. Constructed in accordance with the following standards:
       a. UL 508.
       b. IEC 947-4:
           1) Type 1 coordination when protected by a circuit breaker.
           2) Type 2 coordination when protected by a suitable UL listed fuse.
       c. IEC 801-1 parts 2 through 6.

C. Overloads:
   1. Bi-metallic overload relay:
       a. Class 20 protection.
       b. Ambient compensated.
       c. Interchangeable heater pack:
           1) 1 heater per phase.
           2) Coordinate with installed motor full load amps and service factor.

        - d. Visible trip indicator.
        - e. Push-to-trip test.
        - f. Isolated normally open alarm contact.
        - g. Normally closed trip contacts.
        - h. Manual reset.

- D. Control power transformer:
    - 1. Furnish integral control power transformer capacity to power:
        - a. All motor controls; Motor and starter accessories indicated on the Drawings or specified.
    - 2. Primary and secondary fusing as indicated on the Drawings:
        - a. Fusing sized by the manufacturer for the rating of the transformer furnished.
    - 3. Control power transformer secondary voltage:
        - a. As indicated on the Drawings.

- E. Enclosures for individually enclosed starters:
    - 1. NEMA type specified for the location as specified in Section 16050 - Common Work Results for Electrical.
    - 2. Flange-mounted handle mechanism to operate disconnect switch or circuit breaker:
        - a. Door mounted operators or operator handles are not acceptable.
        - b. Handle mechanism features:
            - 1) Engaged with the disconnect device at all times as an integral part of the unit independent of the door position.
            - 2) Lockable in the Off position.
            - 3) Mechanically interlocked so that the disconnect cannot be switched to the On position with the door open:
                - a) Provide a means for qualified personnel to defeat this interlock during maintenance and testing.
            - 4) Lockable in the On position:
                - a) This feature shall not prevent the circuit breaker from operating during a fault condition.
    - 3. Provide a thermostatically controlled space heater for equipment located outdoors or in unheated areas:
        - a. Powered from the control power transformer.

2.06 ACCESSORIES

- A. Lugs and terminals:
    - 1. For all external connections of No. 6 AWG and larger.
    - 2. UL listed for either copper or aluminum conductors.

- B. Surge protective devices:
    - 1. Furnish surge protection devices across the coil of each starter, contactor, and relay.

- C. Pilot devices:
    - 1. Provide pilot lights, switches, elapsed time meters, and other devices as specified or as indicated on the Drawings.
    - 2. As specified in Section 17710 - Control Systems: Panels, Enclosures, and Panel Components.

D. Nameplates and wire markers:
    1. As specified in Section 16075 - Identification for Electrical Systems.

E. Conformal coating:
    1. Provide conformal coating material applied to electronic circuitry and printed circuit boards to act as protection against moisture, dust, temperature extremes, and chemicals such as H_2S and chlorine.

2.07 MIXES (NOT USED)

2.08 FABRICATION (NOT USED)

2.09 FINISHES (NOT USED)

2.10 SOURCE QUALITY CONTROL

A. RVSS starters:
    1. The manufacturer of the respective RVSS starter shall supply certified test results to confirm that the controller has been tested to substantiate designs according to applicable ANSI and NEMA standards.
    2. The tests shall verify not only the performance of the unit and integrated assembly, but also the suitability of the enclosure venting, rigidity, and bus bracing. In addition, the unit shall be factory tested in accordance with ANSI standards.
    3. The RVSS starter manufacturer shall test for noise immunity on both input and output power connections and provide test results to the Engineer. Noise testing shall be performed in accordance with NEMA ICS 2-230.40.

PART 3 EXECUTION

3.01 EXAMINATION (NOT USED)

3.02 PREPARATION (NOT USED)

3.03 INSTALLATION

A. As specified in Section 16050 - Common Work Results for Electrical.

B. Install the equipment in accordance with the accepted installation instructions and anchorage details to meet the seismic and wind load requirements at the Project site.

C. Starters in motor control centers:
    1. Install as specified in Section 16444 - Low Voltage Motor Control Centers.

D. Starters in control panels:
    1. Install as specified in Section 17710 - Control Systems: Panels, Enclosures, and Panel Components.

E. Individually enclosed starters:
  1. Furnish all cables, conduit, lugs, bolts, expansion anchors, sealants, mounting structures and other accessories needed to completely install the starters.
  2. Assemble and install the starters in the locations and with the layouts indicated on the Drawings.
  3. Install floor-standing starters on a 3-1/2 inch raised concrete housekeeping pad:
     a. Provide structural leveling channels in accordance with the manufacturer's recommendations to provide proper alignment of the units.
     b. Weld and/or bolt the starter frame to the leveling channels.
  4. Install wall mounted starters as specified in Section 16070 - Hangers and Supports.
  5. Provide openings in top or bottom of the enclosure for conduit only, no additional openings will be allowed:
     a. Mis-cut holes will require that the entire enclosure or removable panel be replaced. No hole closers or patches will be allowed.
  6. Bundle circuits together and terminate in each unit:
     a. Tie with nylon wire ties as specified in Section 16123 - 600-Volt or Less Wires and Cables.
     b. Label all wires at each end with wire numbers shown on the approved control drawings.
     c. Make all connections to and from the motor starter via terminal blocks.
  7. Furnish all mounting brackets, stands, etc. that may be required to physically mount the motor starter.

3.04 ERECTION, INSTALLATION, APPLICATION, CONSTRUCTION (NOT USED)

3.05 REPAIR/RESTORATION (NOT USED)

3.06 RE-INSTALLATION (NOT USED)

3.07 COMMISSIONING

A. As specified in Section 01756 - Commissioning.

B. Factory testing:
  1. Owner and Engineer will witness the factory acceptance test as specified in Section 16050 - Common Work Results for Electrical.

3.08 FIELD QUALITY CONTROL

A. As specified in Section 16050 - Common Work Results for Electrical.

3.09 ADJUSTING

A. Make all adjustments as necessary and recommended by the manufacturer, Engineer, or testing firm.

B. Set all overloads and motor circuit protectors based on the nameplate values of the installed motor.

3.10 CLEANING

A. As specified in Section 16050 - Common Work Results for Electrical.

3.11 PROTECTION

A. As specified in Section 16050 - Common Work Results for Electrical.

3.12 SCHEDULES (NOT USED)

END OF SECTION

THIS PAGE INTENTIONALLY LEFT BLANK

SECTION 16441

GROUP-MOUNTED CIRCUIT BREAKER SWITCHBOARDS

PART 1 GENERAL

1.01 SUMMARY

A. Section includes:
   1. Free standing, dead-front type metal-enclosed distribution, low voltage switchboards, utilizing group mounted circuit protective devices.

1.02 REFERENCES

A. As specified in Section 16050 - Common Work Results for Electrical.

B. National Electrical Manufacturers' Association (NEMA):
   1. PB-2 - Dead-front Distribution Switchboards.

C. Underwriters' Laboratories, Inc. (UL):
   1. 50 - Standard for Enclosures for Electrical Equipment.
   2. 891 - Switchboards.

1.03 DEFINITIONS

A. As specified in Section 16050 - Common Work Results for Electrical.

1.04 SYSTEM DESCRIPTION

A. Factory assembled, wired, and tested switchboards, with major components being products of a single manufacturer, including but not limited to, circuit breakers, bus and enclosure with accessories and features specified in this Section and indicated on the Drawings.

1.05 SUBMITTALS

A. Furnish submittals as specified in Sections 01330 - Submittal Procedures and 16050 - Common Work Results for Electrical.

B. Product data:
   1. Manufacturer of switchboard.
   2. Manufacturer of all component parts of switchboard.
   3. Weight of switchboard.
   4. Dimensions:
      a. Height.
      b. Length.
      c. Width.
   5. Nameplate schedule.
   6. Bill of material.
   7. Ratings:
      a. Voltage.

        - b. Phase.
        - c. Current.
        - d. Interrupting rating (circuit breakers and fuses).
        - e. Momentary current rating.
    - 8. List of recommended spare parts.
    - 9. Name and telephone number of manufacturer’s authorized parts and repair provider.
    - 10. Furnish circuit breaker submittals as specified in:
        - a. Section 16412 - Low Voltage Molded Case Circuit Breakers.

- C. Shop drawings:
    - 1. Layout drawings:
        - a. Complete, detailed, and scaled switchboard layout:
            - 1) Front panel.
            - 2) Sub-panels.
            - 3) Interior panels.
            - 4) Top and bottom conduit windows.
    - 2. Complete electrical wiring diagrams:
        - a. Point-to-point connections.
        - b. Indicate wire numbers.

- D. Installation instructions:
    - 1. Detail the complete installation of the equipment including rigging, moving, and setting into place.
    - 2. For equipment installed in structures designated as seismic design category A or B:
        - a. Provide manufacturer’s installation instructions and anchoring details for connecting equipment to supports and structures.
    - 3. For equipment installed in structures designated as seismic design category C, D, E, or F:
        - a. Provide project-specific installation instructions and anchoring details based on support conditions and requirements to resist seismic and wind loads as specified in Section 16050 - Common Work Results for Electrical.
        - b. Submit anchoring drawings with supporting calculations.
        - c. Drawings and calculations shall be stamped by a professional engineer registered in the state where the Project is being constructed.

- E. Operating and maintenance manuals:
    - 1. Submit operating instructions and a maintenance manual for the switchboard(s) furnished and/or installed under this Contract.
    - 2. Operating instructions.
    - 3. Maintenance manual:
        - a. Furnish maintenance manuals with instructions covering all details pertaining to care and maintenance of all equipment as well as data identifying all parts.
        - b. Manuals to include but are not limited to the following:
            - 1) Adjustment and test instructions covering the steps involved in the initial test, adjustment, and start-up procedures.
            - 2) All schematic, wiring, and external diagrams:
                - a) Furnished in a reduced 11-inch by 17-inch fully legible format.

F. Test forms and reports:
   1. Submit complete factory acceptance test procedures and all forms used during the test.
   2. Manufacturer to furnish a certified report after the shop tests.
   3. Manufacturer to furnish a certified report after the start-up:
      a. Report must state that the installation is complete and satisfactory, or list items requiring additional work and a proposal for the corrective actions.

G. Certification letters:
   1. Provide a letter from the switchboard manufacturer that lists every paragraph, subparagraph etc. of this Section and states compliance or non-compliance with said paragraph. If non-compliance is indicated, provide an explanation for the deviation and alternative method to address the non-compliance.

H. Calculations:
   1. Detailed calculations or details of the actual physical testing performed on the switchboard to prove the switchboard is suitable for the seismic requirements at the Project Site.

1.06 QUALITY ASSURANCE

A. As specified in Section 16050 - Common Work Results for Electrical.

B. Sections and devices shall be UL listed and labeled.

C. The manufacturer of this equipment shall have produced similar electrical equipment for a minimum period of 5 years. When requested by the Engineer, an acceptable list of installations with similar equipment shall be provided demonstrating compliance with this requirement.

1.07 DELIVERY STORAGE AND HANDLING

A. As specified in Section 16050 - Common Work Results for Electrical.

B. Ship the switchboard to the job site on a dedicated air ride vehicle that will allow the Contractor to utilize onsite off-loading equipment:

C. Furnish temporary equipment heaters within the switchboard to prevent condensation from forming.

1.08 PROJECT OR SITE CONDITIONS

A. As specified in Section 16050 - Common Work Results for Electrical.

1.09 SEQUENCING

A. Conduct the initial fault current study as specified in Section 16305 - Electrical System Studies and submit results for Engineer’s review.

B. After successful review of the initial fault current study, submit complete equipment submittal.

C. Conduct factory acceptance test and submit certified test results for Engineer’s review.

D. Ship equipment to Project Site after successful completion of factory acceptance test.

E. Assemble equipment in the field.

F. Conduct final fault current and coordination study.

G. Conduct field acceptance test and submit results for Engineer’s review.

H. Submit manufacturer’s certification that equipment has been properly installed and is fully functional for Engineer’s review.

I. Conduct Owner’s training sessions.

J. Commissioning as specified in Section 01756 - Commissioning.

1.10 SCHEDULING

A. As specified in Section 16050 - Common Work Results for Electrical.

1.11 WARRANTY

A. As specified in Section 16050 - Common Work Results for Electrical.

1.12 SYSTEM START-UP

A. As specified in Section 16050 - Common Work Results for Electrical.

1.13 OWNER’S INSTRUCTIONS (NOT USED)

1.14 MAINTENANCE (NOT USED)

PART 2 PRODUCTS

2.01 MANUFACTURERS

A. One of the following or equal:
   1. Schneider Electric, “Power-Style QED.”

B. Circuit breakers: Same manufacturer as the switchboard.

2.02 EXISTING PRODUCTS (NOT USED)

2.03 MATERIALS (NOT USED)

2.04 MANUFACTURED UNITS (NOT USED)

2.05 EQUIPMENT

A. Switchboard:
   1. Furnish low voltage Class 2 switchboards as specified and indicated on the Drawings.
   2. Provide complete and functional switchboards with required controls.
   3. Furnish and install devices or accessories not described in this Section but necessary for the proper installation and operation of the equipment.

B. Voltage ratings:
   1. Voltage level and configuration: As indicated on the Drawings.
   2. Frequency: 60 hertz.
   3. Insulation level:
      a. Twice the rated voltage plus 1,000 volts.

C. Bus:
   1. General:
      a. Tin-plated copper.
      b. Bus cross-section in accordance with UL heat rise requirements.
      c. Current density of 1,000 amperes per square inch.
      d. Mounted on supports of high-impact, non-tracking insulators.
      e. Phase A-B-C bus arrangement:
         1) Top-to-bottom, left-to-right, front-to-back throughout the switchboard.
      f. Symmetrical short circuit current bracing of as indicated on the Drawings.
      g. Continuous current rating as indicated on the Drawings.
   2. Horizontal bus:
      a. Provisions for future connections to additional switchboard sections.
   3. Ground bus:
      a. Sized per UL 891.

D. Enclosure:
   1. General:
      a. Self-supporting structures bolted together to form the required line-up.
      b. All sections rear aligned.
      c. Dead-front.
      d. Conduit entry:
         1) Open-bottom.
         2) Removable top cover.
   2. Frame:
      a. Die-formed 12 gauge steel.
   3. Covers:
      a. Bolt-on.
      b. Code gauge steel.
      c. Removable front covers.
         1) Held in place by captive screws.
   4. Rating:
      a. NEMA Type 1.

2.06 COMPONENTS

A. Circuit breakers:
  1. General:
    a. Molded case circuit breakers as specified in Section 16412 - Low Voltage Molded Case Circuit Breakers.
  2. Main circuit breakers shall be 100 percent rated, fixed mounted molded case breaker with frame and trip ratings as indicated on the Drawings.
    a. Breaker with rating of 1,000 amperes or more shall be provided with ground fault shunt trip.
  3. Individually fixed mounted feeder devices shall be molded case breaker with ratings as indicated on the Drawings.
  4. Circuit breakers shall have a minimum interrupting rating equal to the bus rating or as indicated on the Drawings.

B. Wiring:
  1. Provide all necessary internal wiring, fuse blocks, and terminal blocks as required.
  2. Number all wires at each end and indicate wire numbers on shop drawings.
  3. Type SIS switchboard wire with at least 26 strands.
  4. Minimum wire size:
    a. No. 14 for control circuits.
    b. No. 12 for potential and current transformer circuits.
  5. Numbered and labeled in accordance with Section 16075 - Identification for Electrical Systems.

2.07 ACCESSORIES

A. Surge protective devices:
  1. Provide surge protective devices as indicated on the Drawings and as specified in Section 16285 - Surge Protective Devices.

B. Nameplates:
  1. Provide engraved plastic nameplates to identify:
    a. Switchboard units.
    b. Door mounted components.
    c. Interior mounted devices.
  2. As specified in Section 16075 - Identification for Electrical Systems.
  3. Engraved with the circuit number and circuit name as indicated on the Drawings.
  4. Manufacturers labels:
    a. Each vertical section shall have a label identifying:
      1) Serial number.
      2) Shop order number.
      3) Bus rating.
      4) Vertical section reference number.
      5) Date of manufacture.

C. Warning signs:
  1. Voltage:
    a. Provide a minimum of 2 warning signs on the front of the switchboard lineup and 2 on the back.

            b. Red laminated plastic engraved with white letters approximately 1/2 inch high.
            c. Signs shall read:
                1) "WARNING-HIGH VOLTAGE-KEEP OUT".
        2. Arc flash:
            a. Provide one warning sign for each switchboard compartment.
            b. Signs shall have read a minimum of:
                1) “DANGER ELECTRIC ARC FLASH HAZARD.”
                2) Signs shall meet the requirements of NFPA 70E and NEC Article 110.16.

D. Lugs:
    1. For all external connections of No. 6 AWG or larger.
    2. UL listed for copper or aluminum conductors.
    3. Rated for 75-degree Celsius conductors.
    4. Lugs shall be of the compression type in design requiring a hydraulic press and die for installation.

2.08 MIXES (NOT USED)

2.09 FABRICATION (NOT USED)

2.10 FINISHES

A. Chemically clean all steel surfaces before painting.

B. Exterior color manufacturer’s standard gray over phosphate-type rust inhibitor.

2.11 SOURCE QUALITY CONTROL (NOT USED)

PART 3 EXECUTION

3.01 EXAMINATION (NOT USED)

3.02 PREPARATION (NOT USED)

3.03 INSTALLATION

A. As specified in Section 16050 - Common Work Results for Electrical.

B. Install the equipment in accordance with the accepted installation instructions and anchorage details to meet the seismic and wind load requirements at the Project site.

C. General:
    1. Furnish all cables, conduit, lugs, bolts, expansion anchors, sealants, and other accessories needed to complete the installation of the switchboard.
    2. Assemble and install the switchboard in the location and layout indicated on the Drawings.
    3. Perform work in accordance with manufacturer’s instructions and shop drawings.
    4. Furnish components and equipment as required to complete the installation.

5. Replace any hardware lost or damaged during the installation or handling to provide a complete installation.
6. Install the switchboard on a raised concrete housekeeping pad:
    a. Provide structural leveling channels in accordance with the manufacturer's recommendations to provide proper alignment of the units.
    b. Weld and/or bolt the switchboard frame to be to the leveling channels.

3.04 ERECTION, INSTALLATION, APPLICATION, CONSTRUCTION (NOT USED)

3.05 REPAIR/RESTORATION (NOT USED)

3.06 REINSTALLATION (NOT USED)

3.07 COMMISSIONING

A. As specified in Section 01756 - Commissioning.

B. Factory tests:
1. Owner and Engineer will witness the factory acceptance test as specified in Section 16050 - Common Work Results for Electrical.
2. Completely assemble, wire and test the switchboard:
    a. Provide groups of wires leaving the shipping-assembled equipment with terminal blocks with suitable numbering strips.

3.08 FIELD QUALITY CONTROL

A. As specified in Section 16050 - Common Work Results for Electrical.

3.09 ADJUSTING

A. Make all adjustments as necessary and recommended by the manufacturer, Engineer, or testing firm.

3.10 CLEANING

A. As specified in Section 16050 - Common Work Results for Electrical.

3.11 PROTECTION

A. As specified in Section 16050 - Common Work Results for Electrical.

3.12 SCHEDULES (NOT USED)

END OF SECTION

SECTION 16444

LOW VOLTAGE MOTOR CONTROL CENTERS

PART 1 GENERAL

1.01 SUMMARY

A. Section includes:
   1. Low voltage motor control centers.

1.02 REFERENCES

A. As specified in Section 16050 - Common Work Results for Electrical.

B. National Electrical Manufacturer's Association (NEMA):
   1. ICS 18-2001 - Motor Control Centers.

C. Underwriters Laboratories (UL):
   1. 845 - Motor Control Centers.

1.03 DEFINITIONS

A. As specified in Section 16050 - Common Work Results for Electrical.

1.04 SYSTEM DESCRIPTION

A. Factory assembled, factory wired and factory tested motor control centers:
   1. Motor control centers and major components to be products of a single manufacturer.

1.05 SUBMITTALS

A. Furnish submittals as specified in Sections 01330 - Submittal Procedures and 16050 - Common Work Results for Electrical.

B. Product data:
   1. Manufacturer of motor control center.
   2. Manufacturer of motor control center parts.
   3. Nameplate schedule.
   4. Bill of material.
   5. Enclosure:
      a. NEMA rating.
      b. Finish color.
   6. Ratings:
      a. Voltage.
      b. Phase.
      c. Current:
         1) Horizontal bus ampacity.
         2) Vertical bus ampacity.
         3) Ground bus ampacity.

        - d. Short circuit withstand rating.
        - e. Protective device interrupting rating.
    - 7. List of recommended spare parts.
    - 8. Catalog cut sheets:
        - a. Submit complete manufacturer's catalog information:
            - 1) Clearly indicate the features of the equipment including any options necessary to meet the required functionality.
    - 9. Furnish component submittals as specified in the appropriate Section.
    - 10. For equipment installed in structures designated as seismic design category C, D, E, or F submit the following as specified in Section 16050 - Common Work Results for Electrical:
        - a. Manufacturer's statement of seismic qualification with substantiating test data.
        - b. Manufacturer's special seismic certification with substantiating test data.

- C. Shop drawings:
    - 1. Layout drawings:
        - a. Provide fully dimensioned and to scale layout drawings which include:
            - 1) Dimensions:
                - a) Overall length.
                - b) Overall width.
                - c) Overall height.
                - d) Overall weight and weight of individual shipping splits.
    - 2. Interfaces to other equipment.
    - 3. Shipping splits.
    - 4. Allowable top and bottom conduit windows.
    - 5. Complete component and unit layout drawings.
    - 6. Indicate lug sizes, type, and manufacturer based on the cable size specified in the Contract Documents and as indicated on the Drawings.
    - 7. Elementary schematics:
        - a. Provide one custom schematic diagram for each compartment:
            - 1) Include all remote devices.
            - 2) Show wire numbers on the schematics:
                - a) Provide wire numbering as specified in Section 16075 - Identification for Electrical Systems.
    - 8. External connection diagram showing the wiring to the external controls and devices associated with the motor control center.
    - 9. One-line diagrams:
        - a. Provide complete one-line diagrams for each motor control center, including but not limited to: protective devices, starters, drives, metering, and other equipment.
        - b. Indicate electrical ratings of the equipment shown on the one-line diagrams.

- D. Installation instructions:
    - 1. Detail the complete installation of the equipment including rigging, moving, and setting into place.
    - 2. For equipment installed in structures designated as seismic design category A or B:
        - a. Provide manufacturer's installation instructions and anchoring details for connecting equipment to supports and structures.

E. Operation and maintenance manuals:
  1. Provide complete operating and maintenance instructions presenting full details for care and maintenance of all types of equipment furnished and/or installed under this Section. Include the following:
    a. Electrical ratings:
      1) Phase.
      2) Wire.
      3) Voltage.
      4) Ampacity.
      5) Bus bracing and protective device interrupting ratings.
    b. Manufacturer's operating and maintenance instructions for the motor control center and all component parts, including:
      1) Starters.
      2) Overload relays and heater elements.
      3) Variable frequency drives.
      4) Protective devices including, but not limited to, fuses, circuit breakers and protective relays.
      5) Pilot devices.
    c. Complete renewal parts list.

F. Test forms and reports:
  1. Submit complete factory acceptance test procedures and all forms used during the test.

G. Manufacturer's Certificate of Installation and Functionality Compliance.

H. Record Documents:
  1. Elementary schematics:
    a. Furnish as-built elementary schematics indicating final:
      1) Wire numbers.
      2) Interfaces with other equipment.
    b. Provide one custom schematic diagram for each compartment:
      1) Include all remote devices.
      2) Show wire numbers on the schematics.
    c. Layout drawings: Provide complete dimensioned component and unit layout drawings.
  2. The Record Documents shall reflect all modifications made during the submittal review process and during construction.

I. Calculations:
  1. Detailed calculations or details of the actual physical testing performed on the motor control center to prove the motor control center is suitable for the seismic requirements at the Project Site.

1.06 QUALITY ASSURANCE

A. As specified in Section 16050 - Common Work Results for Electrical.

B. All portions of the motor control center, vertical bays, and components shall be UL listed and labeled.
  1. Where indicated as service entrance equipment, the motor control center shall be UL labeled and listed "Suitable for Service Entrance".

1.07 DELIVERY, STORAGE AND HANDLING

A. As specified in Section 16050 - Common Work Results for Electrical.

B. Ship the motor control center and associated equipment to the job site on a dedicated air ride vehicle that will allow the Contractor to utilize onsite off-loading equipment.

C. Furnish temporary equipment heaters within the motor control center to prevent condensation from forming.

1.08 PROJECT OR SITE CONDITIONS

A. As specified in Section 16050 - Common Work Results for Electrical.

1.09 SEQUENCING

A. Conduct the initial fault current study as specified in Section 16305 - Electrical System Studies and submit results for Engineer’s review.

B. After successful review of the initial fault current study, as specified in Section 16305 - Electrical System Studies, submit complete equipment submittal.

C. Conduct factory acceptance test.

D. Submit Manufacturer’s Certificate of Installation and Functionality Compliance.

E. Ship equipment to the Project Site after successful completion of factory acceptance test.

F. Assemble equipment in the field.

G. Conduct field acceptance test and submit results for Engineer’s review.

H. Submit manufacturer’s certification that the equipment has been properly installed and is fully functional for Engineer’s review.

I. Conduct Owner’s training sessions.

J. Commissioning and process start-up as specified in Section 01756 - Commissioning.

1.10 SCHEDULING

A. As specified in Section 16050 - Common Work Results for Electrical.

1.11 WARRANTY

A. As specified in Section 16050 - Common Work Results for Electrical.

1.12 SYSTEM START-UP

A. As specified in Section 16050 - Common Work Results for Electrical.

1.13 OWNER'S INSTRUCTION (NOT USED)

1.14 MAINTENANCE (NOT USED)

PART 2 PRODUCTS

2.01 MANUFACTURERS

A. One of the following or equal:
   1. Schneider Electric, Model 6 Industrial.

2.02 EXISTING PRODUCTS (NOT USED)

2.03 MATERIALS (NOT USED)

2.04 MANUFACTURED UNITS (NOT USED)

2.05 EQUIPMENT

A. General:
   1. Furnish motor control centers as specified in the Contract Documents and indicated on the Drawings.
   2. Arrange the equipped sections to form continuous motor control center lineups as indicated on the Drawings:
      a. Identify any deviations from the Drawings in writing and submit for approval.
   3. Provide wire markers at each end of every wire as specified in Section 16075 - Identification for Electrical Systems.
   4. Provide complete and functional motor control centers.
   5. Provide devices or accessories not specified in this Section but necessary for the proper installation and operation of the equipment.

B. Design and construct motor control center to operate at the voltage level and configuration indicated on the Drawings.

C. Bus system:
   1. Material:
      a. Tin-plated copper.
      b. Short-circuit rating:
         1) As indicated on the Drawings.
      c. Bus bar supports:
         1) High impact strength, non-tracking glass-polyester material that is impervious to moisture and gases.
   2. Horizontal power bus:
      a. Current-carrying capacity as indicated on the Drawings.
      b. Mounting:
         1) Mount horizontal bus bars edgewise, one above the other, and fully isolated from all wireways and units.

    - c. Temperature rise:
        - 1) In accordance with UL 845.
        - 2) De-rate the temperature rating of the bus for the specified conditions of ambient temperature and altitude as specified in Section 16050 - Common Work Results for Electrical.
- 3. Vertical power bus:
    - a. Current-carrying capacity of not less than 600 amps.
    - b. Mounting:
        - 1) Enclose the vertical bus in a polyester-glass cover with small openings to permit unit stabs to mate with the bus:
            - a) Provide a shutter mechanism to cover the stab openings when plug-in units are removed.
        - 2) Provide top and bottom bus covers for insulation and isolation of the ends of the bus.
    - c. Isolated from the unit compartments by a full height barrier.
- 4. Ground bus:
    - a. Horizontal ground bus:
        - 1) Current-carrying capacity:
            - a) 300 amps when the horizontal bus is 2,000 amps or less.
            - b) 600 amps when the horizontal bus is greater than 2,000 amps.
        - 2) Mounting:
            - a) Full width, firmly secured to each vertical section structure:
                - (1) Located in the top or bottom wireway.
            - b) Pre-drilled and furnished with lugs for connection to equipment ground wires:
                - (1) Furnish a minimum of 10 lugs per vertical section of MCC.
    - b. Vertical ground bus.
        - 1) Mounting:
            - a) Furnish in each vertical section.
            - b) Bolted to the horizontal ground bus.
            - c) Install parallel to the vertical power bus.
            - d) Mount vertical ground bus such that plug-in units engage the ground bus before any connection to the power bus is made. Upon removal of plug-in units, ground stabs are disconnected from the ground bus after the power stabs have been disconnected.
- 5. Bus splice bars:
    - a. Provided to join the bus at the splits.
    - b. Connected to each horizontal bus bar with a minimum of two bolts.
    - c. Employ conical or spring washers at connections, designed to maintain constant pressure against the splice joint.
    - d. Same ampacity rating as the horizontal bus.
- 6. Provide bus system configured for back-to-back MCCs, where required.

D. Enclosures:

- 1. Each motor control center shall consist of 1 or more vertical sections bolted together:
    - a. Freestanding.
    - b. Totally enclosed.
    - c. Dead-front assembly.
    - d. Designed for modification and/or addition of future vertical sections.
    - e. Form each vertical section of heavy gauge steel.

        - f. Designed for back-to-back arrangement installation, where required and/or as indicated on the Drawings.
    - 2. Enclosure rating:
        - a. Indoor:
            - 1) NEMA Type 1 gasketed.
    - 3. Standard section dimensions:
        - a. Nominal height: 90 inches.
        - b. Nominal depth: 20 inches.
        - c. Vertical section width as indicated on the Drawings.
    - 4. Wireways:
        - a. Provide each vertical section with a horizontal wireway at the top and bottom of the section:
            - 1) Arranged to provide a full-width metal enclosed wiring trough across the entire motor control center assembly.
        - b. Provide each vertical section with a full-height vertical wireway.
        - c. Completely isolated from the vertical and horizontal bus bars.
        - d. Provide a removable, hinged door.
    - 5. Shipping splits:
        - a. No more than 3 vertical sections and not more than 60 inches in width.
        - b. Solid bussing between vertical sections in a shipping split is not acceptable.
    - 6. Lifting angles:
        - a. Furnish each vertical section and/or shipping split with a removable lifting angle mounted to the top of the enclosure:
            - 1) Extending the entire width of the shipping split.
    - 7. Mounting channels:
        - a. Mount each vertical section and/or shipping split on an external 1.5-inch by 3-inch mounting channel.

- E. Units:
    - 1. A plug-in unit consists of:
        - a. Unit assembly.
        - b. Unit support pan.
        - c. Unit door assembly.
    - 2. Completely enclosed and isolated from adjacent units, buses, and wireways, except for conductor entries into the unit, by a metal enclosure.
    - 3. Constructed so that any fault will be contained in the unit compartment.
    - 4. Supported and guided by a removable unit support pan:
        - a. Re-arrangement of units and the removal of a unit so that a new and possibly larger unit can be added without the removal of an in-service unit to gain access to the unit support pan.
    - 5. Held in place by screws or other positive locking means after insertion.
    - 6. Provide a test position with the unit supported in the structure but disengaged from the bus.
    - 7. Integral plug-in ground stab.
    - 8. Stabs:
        - a. Free floating.
        - b. Self-aligning.
        - c. Backed by spring steel clips to ensure high pressure contacts:
        - d. Electrolytically tin-plated copper.

9. Handle:
    a. Provide a flange mounted handle mechanism to operate each disconnect switch or circuit breaker.
    b. Door mounted operators or operator handles are not acceptable.
    c. Engaged with the disconnect device at all times as an integral part of the unit independent of the door position.
    d. Lockable in the “OFF” position with up to 3 padlocks.
    e. Mechanically interlocked so that the door cannot be opened with the handle in the “ON” position.
        1) Provide a means for qualified personnel to defeat this interlock.
    f. Interlocked so the unit cannot be inserted or withdrawn with the handle in the “ON” position.
    g. Lockable in the “ON” position:
        1) This shall not prevent the circuit breaker from operating and opening the contacts in the event of a fault condition.
    h. Color-coded to indicate position.
    i. Located so the center of the grip when it is in its highest position is not more than 6 feet 7 inches above the finished floor, including the height of the housekeeping pad and mounting channels.
10. Where indicated on the Drawings, provide units for spaces and future equipment:
    a. Equip these units to accept a future plug-in unit without modification to the vertical sections.

2.06 COMPONENTS

A. Provide components contained within the motor control center as specified in:
    1. Section 16075 - Identification for Electrical Systems.
    2. Section 16123 - 600-Volt or Less Wires and Cables.
    3. Section 16150 - Low Voltage Wire Connections.
    4. Section 16290 - Electrical Power Monitoring.
    5. Section 16285 - Surge Protective Devices.
    6. Section 16412 - Low Voltage Molded Case Circuit Breakers.
    7. Section 16422 - Motor Starters.

2.07 ACCESSORIES

A. Wiring:
    1. Wire the motor control center in accordance with the following NEMA Class and Type as defined by NEMA ICS 18-2001:
        a. NEMA Class II-S:
            1) Furnish wiring diagrams for individual units consisting of drawings that identify electrical devices, electrical connections, and indicate terminal numbering designations.
            2) Furnish individual unit diagrams with each unit and include inter-wiring between units, i.e. electrical interlocking, etc., as specifically specified in the Contract Documents.
            3) Provide custom drawings with unique terminal numbering designations in lieu of standard manufacturer drawings.
        b. NEMA Type B wiring:
            1) Control wiring:
                a) Type B-T pull-apart terminal blocks.

        2) Power wiring:
            a) Type B-T for Size 1 starters.
            b) Type B-T or B-D for Size 2 and 3 starters.
            c) Type B for Size 4 and larger starters and feeder units.

B. Lugs and terminals:
    1. For all external connections of No. 6 AWG wire or larger:
        a. UL listed for copper or aluminum conductors.
    2. Compression type, requiring a hydraulic press and die for installation.
    3. Provide 20 percent spare control block terminals.

C. Nameplates:
    1. Provide nameplates as specified in Section 16075 - Identification for Electrical Systems:
        a. Identifying the motor control center designation as indicated on the Drawings.
    2. Identifying each vertical section:
        a. Mounted and centered on the top horizontal wireway of the vertical section.
    3. Furnish individual nameplates for each unit indicated on the Drawings:
        a. 1 nameplate to identify the unit designation.
        b. 1 nameplate to identify the load served.
        c. Furnish space units with blank nameplates.
    4. Manufacturer’s labels:
        a. Furnish each vertical section with a label identifying:
            1) Serial number.
            2) Bus rating.
            3) Vertical section reference number.
            4) Date of manufacture.
            5) Catalog number of section.

2.08 MIXES (NOT USED)

2.09 FABRICATION (NOT USED)

2.10 FINISHES

A. Finish metal surfaces and structural parts with phosphatizing, or equal, treatment before painting.

B. Finish interior surfaces including bus support angles, control unit back plates, and top and bottom barrier plates with baked white enamel.

C. Finish exterior of enclosure with manufacturer’s standard gray.

D. Finish NEMA Type 3R exterior cabinets with ultraviolet resistant enamel paint that is UL recognized for outdoor use.

2.11 SOURCE QUALITY CONTROL

A. Perform manufacturer’s standard factory test on all motor control centers prior to shipment.

PART 3 EXECUTION

3.01 EXAMINATION (NOT USED)

3.02 PREPARATION (NOT USED)

3.03 INSTALLATION

A. As specified in Section 16050 - Common Work Results for Electrical.

B. Install the equipment in accordance with the accepted installation instructions and anchorage details to meet the seismic and wind load requirements at the Project site.

C. General:
   1. Furnish all cables, conduit, lugs, bolts, expansion anchors, sealants, and other accessories necessary to completely install the motor control center for the line, load, and control connections.
   2. Assemble and install the motor control center in the locations and with the layouts as indicated on the Drawings.
   3. Make bus splice connections.
   4. Perform work in accordance with manufacturer’s instruction and shop drawings.
   5. Furnish all components, and equipment necessary to complete the installation.
   6. Replace hardware, lost or damaged during installation or handling, in order to provide a complete installation.
   7. Install the MCC on a 3-1/2-inch raised concrete housekeeping pad:
      a. Provide structural leveling channels in accordance with the manufacturer’s recommendations to provide proper alignment of the units.
         1) Remove the manufacturer’s supplied mounting channels as required by the manufacturer’s installation instructions.
      b. Weld and/or bolt the motor control center frame to leveling channels.

D. Provide openings in the top or bottom of the motor control center for conduit only.
   1. No additional openings will be accepted:
      a. Miscut holes will require that the entire vertical section or removable panel be replaced.
      b. No hole closers or patches will be accepted.

E. Bundle circuits together and terminate in each unit:
   1. Tie with nylon wire ties as specified in Section 16123 - 600-Volt or Less Wires and Cables.
   2. Label all wires at each end with wire markers as specified in Section 16075 - Identification for Electrical Systems as shown on the approved elementary schematics.

3.04 ERECTION, INSTALLATION, APPLICATION CONSTRUCTION (NOT USED)

3.05 REPAIR/RESTORATION (NOT USED)

3.06 REINSTALLATION (NOT USED)

3.07 COMMISSIONING

A. As specified in Section 01756 - Commissioning.

B. Source testing (Factory Acceptance Tests):
   1. Owner and Engineer will witness the factory acceptance test as specified in Section 16050 - Common Work Results for Electrical.
   2. Test the complete motor control center at the manufacturer's establishment. Completely assemble, wire and test the motor control center:
      a. Detailed inspections before and after assembly to ensure correctness of design and workmanship.
      b. Provide groups of wires leaving the shipping-assembled equipment with terminal blocks with suitable numbering strips.
   3. Provide Manufacturer's Certificate of Installation and Functionality Compliance as specified in Section 01756 - Commissioning.

3.08 FIELD QUALITY CONTROL

A. As specified in Section 16050 - Common Work Results for Electrical.

B. Provide the services of a manufacturer's representative to:
   1. Inspect, verify, and certify that the motor control center installation meets the manufacturer's requirements.

3.09 ADJUSTING

A. Make all adjustments as necessary and recommended by the manufacturer, Engineer, or testing firm.

3.10 CLEANING

A. As specified in Section 16050 - Common Work Results for Electrical.

3.11 PROTECTION

A. As specified in Section 16050 - Common Work Results for Electrical.

3.12 SCHEDULES (NOT USED)

END OF SECTION

THIS PAGE INTENTIONALLY LEFT BLANK

SECTION 16445

PANELBOARDS

PART 1 GENERAL

1.01 SUMMARY

A. Section includes:
   1. Panelboards serving feeder circuits and branch circuits.

1.02 REFERENCES

A. As specified in Section 16050 - Common Work Results for Electrical.

B. Underwriter's Laboratories, Inc. (UL):
   1. 67 - Standard for Panelboards.

1.03 DEFINITIONS

A. As specified in Section 16050 - Common Work Results for Electrical.

1.04 SYSTEM DESCRIPTION

A. Circuit breaker panelboards as indicated in the panelboard schedules, one-lines, and where indicated on the Drawings:
   1. Service voltage and configuration as indicated on the panel schedules.

1.05 SUBMITTALS

A. Furnish submittals as specified in Sections 01330 - Submittal Procedures and 16050 - Common Work Results for Electrical.

B. Product data:
   1. Manufacturer of panelboard.
   2. Bill of material.
   3. Assembly ratings including:
      a. Voltage.
      b. Phase.
      c. Continuous current.
      d. Short circuit interrupting rating.
   4. NEMA enclosure type.
   5. Cable terminal sizes based upon actual feeder and sub-feeder conductors used.
   6. Furnish circuit breaker submittals as specified in Section 16412 - Low Voltage Molded Case Circuit Breakers.

C. Shop drawings:
  1. Drawings to contain:
    a. Overall panelboard dimensions, interior panel dimensions, and wiring gutter dimensions:
      1) Height.
      2) Length.
      3) Width.
    b. Weight.
    c. Anchoring locations.
    d. Breaker layout drawing with dimensions:
      1) Location of the main, branches, solid neutral, and ground.
    e. Conduit entry/exit locations:
      1) Identify all conduit entry/exit locations and restrictions.
    f. Individual panel schedules identifying breaker locations, ratings, and nameplate designations within the panelboard, for every panelboard.

D. Installation instructions:
  1. Detail the complete installation of the equipment including rigging, moving, and setting into place.
  2. For equipment installed in structures designated as seismic design category A or B:
    a. Provide manufacturer's installation instructions and anchoring details for connecting equipment to supports and structures.

E. Operations and maintenance manual:
  1. Provide a complete manual for the operation and maintenance of the panelboard, circuit breakers, devices, and accessories:
    a. Including but not limited to:
      1) Instruction narratives and bulletins.
      2) Renewal parts lists.
      3) Time-current curves for all devices.

1.06 QUALITY ASSURANCE

A. As specified in Section 16050 - Common Work Results for Electrical.

B. Panelboards shall be UL listed and labeled.
  1. Where indicated as service entrance equipment, panelboards shall be UL labeled and listed "Suitable for Service Entrance."

1.07 DELIVERY, STORAGE, AND HANDLING

A. As specified in Section 16050 - Common Work Results for Electrical.

1.08 PROJECT OR SITE CONDITIONS

A. As specified in Section 16050 - Common Work Results for Electrical.

1.09 SEQUENCING (NOT USED)

1.10 SCHEDULING (NOT USED)

1.11 WARRANTY

A. As specified in Section 16050 - Common Work Results for Electrical.

1.12 SYSTEM START-UP

A. As specified in Section 16050 - Common Work Results for Electrical.

1.13 OWNER'S INSTRUCTIONS (NOT USED)

1.14 MAINTENANCE (NOT USED)

PART 2 PRODUCTS

2.01 MANUFACTURERS

A. One of the following or equal:
   1. Schneider Electric.

B. Circuit breakers:
   1. Same manufacturer as the panelboard.

2.02 EXISTING PRODUCTS (NOT USED)

2.03 MATERIALS (NOT USED)

2.04 MANUFACTURED UNITS (NOT USED)

2.05 EQUIPMENT

A. Provide panelboards with:
   1. Molded-case circuit breakers with trip ratings as shown on the panel schedules.
   2. Spares and spaces for future circuit breakers in panels as shown on the panel schedules.

B. Short circuit rating:
   1. Provide panelboards with short-circuit ratings as indicated on the Drawings:
   2. Testing method in accordance with UL 67.
   3. Mark each panelboard with its maximum short circuit rating at the supply voltage.
   4. Panelboards shall be fully rated.

2.06 COMPONENTS

A. Enclosure:

   1. NEMA enclosure type as indicated on the Drawings.
      a. Where not indicated on the Drawings, as specified in Section 16050 - Common Work Results for Electrical for the installed location.
   2. Minimum width: 20 inches.
   3. Gutter space in accordance with the NEC:
      a. Minimum of 4 inches of gutter space.

    4. Dead-front, no live parts when the panelboard is in service.
    5. Enclose entire panelboard bus assembly in a corrosion resistant galvanized steel cabinet.
    6. 4-piece front to provide ease of wiring access.
    7. Lockable, hinged door over the protective devices with a flush, cylinder tumbler-type lock with catch and door pull.
        a. Minimum 2 keys per panelboard.
        b. Key all panelboard locks alike.
    8. Circuit directory frame and card on the inside of the door.
    9. Interior design such that replacement of circuit breakers does not require disturbing adjacent units or removal of the main bus connectors.
    10. Outdoor locations: Provide NEMA Type 4X enclosures with a NEMA Type 4X stainless steel outer enclosure (with a hinged door) and a NEMA Type 1 interior panelboard, unless otherwise indicated.

B. Bus:
    1. General:
        a. Tin-plated copper.
    2. Phase bus:
        a. Full size and height without reduction.
        b. Sized in accordance with UL standards to limit temperature rise on any current carrying part to a maximum of 50 degrees Celsius:
            1) Limit current density to less than 1,000 amps per square inch.
        c. Insulate all current carrying parts from ground and phase-to-phase with a high dielectric strength insulator.
    3. Ground bus:
        a. Copper, solidly bonded.
    4. Neutral bus:
        a. Provide where indicated on the Drawings.
        b. 100 percent rated.
        c. Provide lugs for each outgoing feeder requiring a neutral connection.
    5. Provide insulation barriers over the vertical bus behind the dead front shield to provide increased safety during field service.

C. Lugs:
    1. UL listed for copper and aluminum wire:
        a. Provide lugs rated for 75-degree Celsius terminations.
        b. Provide bolted or compression main lug terminations as required for the incoming cable size.

D. Circuit breakers: As specified in Section 16412 - Low Voltage Molded Case Circuit Breakers and as indicated on the Drawings:
    1. Provide all circuit breakers with bolt-on connections:
        a. Plug-in circuit breakers are not allowed.

2.07 ACCESSORIES

A. Surge protective devices:
    1. Furnish panelboards with surge protective devices as indicated on the Drawings.
    2. As specified in Section 16285 - Surge Protective Devices.

B. Nameplates:
   1. As specified in Section 16075 - Identification for Electrical Systems.
   2. Install on outside of door.
   3. Indicating:
      a. Panel designation.
      b. Voltage.
      c. Number of phases and configuration.

C. Circuit identification labels:
   1. Provide index cards behind heavy clear plastic in cardholders on the inside of the doors.
   2. Type all information on the cards using designations in the panel schedules.
   3. Laminated on both sides.

D. Pad locking mechanism:
   1. Provide a pad locking attachment to allow circuit breakers to be locked in the off position.
   2. At a minimum, provide 1 mechanism per panelboard:
      a. Provide multiple mechanisms if required to accommodate all circuit breaker frame sizes in the panelboard.

2.08 MIXES (NOT USED)

2.09 FABRICATION (NOT USED)

2.10 FINISHES

A. Finish stand-alone panelboards with a primer, rust-resistant phosphate undercoat, and 2 coats of oven-baked enamel with manufacturer’s standard gray.

B. Finish panelboards mounted in motor control centers to match the motor control center finish and color.

2.11 SOURCE QUALITY CONTROL (NOT USED)

PART 3 EXECUTION

3.01 EXAMINATION (NOT USED)

3.02 PREPARATION (NOT USED)

3.03 INSTALLATION

A. As specified in Section 16050 - Common Work Results for Electrical.

B. Install the equipment in accordance with the accepted installation instructions and anchorage details to meet the seismic and wind load requirements at the Project site.

C. General:
   1. Surface, flush or MCC mounted as indicated on the Drawings.
   2. Mount rigidly to structural members with exposed surfaces plumb and level to within 1/32 inch.
   3. Perform work in accordance with the manufacturer's instructions and shop drawings.
   4. Provide all brackets, hangers, supports, and hardware for mounting as required.
   5. In all NEMA Type 4 and NEMA Type 4X locations, mount panelboards on 7/8-inch deep stainless steel preformed channel, with channel running vertically from top to bottom of panelboard:
      a. Use only stainless steel mounting hardware.
   6. Mount panelboard so that top operating handle is not more than 6 feet and 7 inches above the operating floor.

3.04 ERECTION, INSTALLATION, APPLICATION, CONSTRUCTION (NOT USED)

3.05 REPAIR/RESTORATION (NOT USED)

3.06 RE-INSTALLATION (NOT USED)

3.07 COMMISSIONING

A. As specified in Section 01756 - Commissioning.

B. Factory testing:
   1. Perform standard factory tests on the panelboards:
   2. Test in accordance with the latest version of NEMA and UL standards.

3.08 FIELD QUALITY CONTROL

A. As specified in Section 16050 - Common Work Results for Electrical.

3.09 ADJUSTING (NOT USED)

3.10 CLEANING

A. As specified in Section 16050 - Common Work Results for Electrical.

3.11 PROTECTION

A. As specified in Section 16050 - Common Work Results for Electrical.

3.12 SCHEDULES

A. Circuiting within the panelboard shall match the panel schedules as indicated on the Drawings.

B. Provide typewritten schedule in each panelboard.

END OF SECTION

SECTION 16491

TRANSFER SWITCHES

PART 1 GENERAL

1.01 SUMMARY

A. Section includes:
   1. Transfer switches.

1.02 REFERENCES

A. As specified in Section 16050 - Common Work Results for Electrical.

B. Underwriters Laboratories (UL):
   1. UL 1008 Transfer Switch Equipment.

1.03 DEFINITIONS

A. As specified in Section 16050 - Common Work Results for Electrical.

B. Specific definitions:
   1. ATS: Automatic transfer switch.
   2. MTS: Manually initiated, electrically operated transfer switch.

1.04 SYSTEM DESCRIPTION

A. Provide transfer switches capable of transferring load circuits from utility power to standby power and back.

B. ATS sequence of operation:
   1. When the voltage of any normal source phase drops below 80 percent and after an adjustable time delay (0 to 6 seconds minimum), the transfer switch shall start the standby generator.
   2. When standby voltage reaches 90 percent of nominal, and frequency is within 2 hertz of nominal, following an adjustable time delay (0 to 10 seconds), the switch shall transfer to standby power.
   3. When normal power has been restored to 90 percent of nominal on all phases, following an adjustable time delay (0 to 30 minutes), the switch shall retransfer to normal power.
      a. If the standby source fails during this time delay, the switch shall automatically retransfer to normal power.
   4. Following an adjustable generator cool-down timer (0 to 60 minutes), the switch shall stop the generator.

1.05 SUBMITTALS

A. Furnish submittals as specified in Sections 01330 - Submittal Procedures and 16050 - Common Work Results for Electrical.

B. Product data:
  1. Manufacturer of transfer switch.
  2. Manufacturer of all component parts of the ATS.
  3. Dimensions:
    a. Width.
    b. Length.
    c. Height.
    d. Weight.
  4. Bill of material.
  5. Description of operation.
  6. Ratings:
    a. Voltage.
    b. Phase.
    c. Current.
    d. Number of poles.
  7. List of recommended spare parts.

C. Shop drawings:
  1. Layout drawings:
    a. Furnish full-dimension and to-scale equipment layout drawings which include:
      1) Plan, front, and side views.
      2) Sub-panels.
      3) Interior panels.
      4) Top and bottom conduit windows.
  2. Complete electrical wiring diagrams:
    a. Point-to-point connections.
    b. Indicate wire numbers.
  3. Complete interface and connection diagrams.

D. Installation instructions:
  1. Detail the complete installation of the equipment including rigging, moving, and setting into place.
  2. For equipment installed in structures designated as Seismic Design Category A or B:
    a. Provide manufacturer’s installation instructions and anchoring details for connecting equipment to supports and structures.

E. Operation and maintenance manuals:
  1. Operating instructions:
    a. Printed and framed instruction chart suitable for wall hanging.
    b. Detail the operational functions of all transfer switch controls.
  2. Maintenance manual:
    a. Furnish maintenance manuals with instructions covering maintenance of all equipment and data identifying all parts.
    b. Furnish all information needed to maintain the transfer switch including, but not limited to, the following:
      1) Instructions for testing, adjustment, and start-up.
      2) Detailed control instructions that outline the purpose and operation of every control device used in normal operation.

            3) Description of the sequence of operation that outlines the steps that follow normal power failure, transfer to standby power, return to normal power, and fault conditions.
            4) Schematics and wiring:
                a) Furnished in a reduced 11-inch-by-17-inch fully legible format.
            5) Report listing the installed setting of all adjustable parameters for the automatic transfer system.

F. Test forms and reports:
    1. Submit complete factory acceptance test procedures and all forms used during the test.
    2. Manufacturer to furnish certified report after the factory tests.
    3. Manufacturer to furnish written report after start-up:
        a. Report must state that the installation is complete and satisfactory, or list items requiring additional attention and a proposal for the corrective actions.
        b. If the items require attention after the initial start-up, a final report is required stating that the installation is complete and satisfactory.

G. Warranty.

1.06 QUALITY ASSURANCE

A. As specified in Section 16050 - Common Work Results for Electrical.

B. Transfer switches shall be UL listed and labeled.
    1. Where indicated on the Drawings the transfer switch shall be UL labeled and listed “Suitable for Service Entrance.”

1.07 DELIVERY, STORAGE, AND HANDLING

A. As specified in Section 16050 - Common Work Results for Electrical.

B. Ship the transfer switch to the job site on a dedicated air-ride vehicle that will allow the Contractor to utilize on-site off-loading equipment.

C. Furnish temporary equipment heaters within the transfer switch to prevent condensation from forming.

1.08 PROJECT OR SITE CONDITIONS

A. As specified in Section 16050 - Common Work Results for Electrical.

1.09 SEQUENCING (NOT USED)

1.10 SCHEDULING (NOT USED)

1.11 WARRANTY

A. As specified in Section 16050 - Common Work Results for Electrical.

1.12 SYSTEM START-UP

A. As specified in Section 16050 - Common Work Results for Electrical.

1.13 OWNER'S INSTRUCTIONS (NOT USED)

1.14 MAINTENANCE (NOT USED)

PART 2 PRODUCTS

2.01 MANUFACTURERS

A. Transfer switch: One of the following or equal:
   1. Schneider Electric / ASCO.
   2. Russelectric, Inc.
   3. Eaton.

2.02 EXISTING PRODUCTS (NOT USED)

2.03 MATERIALS (NOT USED)

2.04 MANUFACTURED UNITS (NOT USED)

2.05 EQUIPMENT

A. General:
   1. Capable of switching all classes of load.
   2. Rated for continuous duty when installed in a non-ventilated enclosure.
   3. Provide circuit breakers or contactors rated for continuous duty.
   4. Minimum transfer time for delayed transition ATS: 1 second.
   5. Capable of transferring successfully in either direction with 70 percent of rated voltage applied to the terminals.
   6. Provide automatic transfer switches with provisions for manual operation under no load.
   7. Provide automatic transfer switches with bypass isolation switch to allow maintenance of the switch without interrupting power to the load.

B. Electrical ratings:
   1. Voltage, configuration, and amp ratings as indicated on the Drawings.
   2. Withstand and close into fault ratings in accordance with UL 1008.

C. Contacts:
   1. Mechanically held.
   2. Mechanically interlocked to prevent normal and standby sources from being closed at the same time.
   3. Silver alloy construction.
   4. Neutral contact, when indicated on the Drawings:
      a. Same ratings as the phase contacts.
      b. Break last and make first operation.

D. Controls:
  1. ATS shall have 3-phase over-voltage, under-voltage, over-frequency, and under-frequency on both normal and standby sources.
  2. Control panel:
     a. Microprocessor based.
     b. 4-line, 20-character LCD display. Displayed data shall include:
        1) Normal and standby source parameters.
        2) Diagnostic information.
        3) Switch and timer status.
     c. Keypad for making all ATS settings and operating parameters.
        1) All settings shall be password protected.
     d. LED display of the following:
        1) Normal source available.
        2) Connected to normal source.
        3) Standby source available.
        4) Connected to standby source.
     e. Communications: Modbus TCP and embedded webserver.
     f. Provisions for testing ATS operation by simulating a normal source failure.
     g. Generator exerciser:
        1) Programmable to start the generator on a daily, weekly, monthly, or yearly basis for an adjustable period of time.
        2) Load or no load selectable.
           a) When load is selected, ATS will transfer to the generator for the duration of the exercise period. Re-transfer back and cool down the generator.
           b) When no load is selected, the ATS will run the generator for the duration of the exercise period and then stop the generator.
  3. Status and control contacts:
     a. Generator start/stop contact:
        1) Single-pole, double-throw.
        2) Rated for 5 amps at 30 VDC.
     b. Status contacts:
        1) Single-pole, double-throw.
        2) Rated for 10 amps at 250 VAC.
        3) Provide contacts for the following:
           a) Normal source available.
           b) Normal source failure.
           c) Connected to normal source.
           d) Standby source available.
           e) Standby source failure.
           f) Connected to standby source.

E. Enclosure:
  1. NEMA 12.

F. Bypass-isolation switch:
  1. Provide a bypass-isolation transfer switch to allow electrical bypass and isolation of the ATS:
     a. Bypass of the load to either normal or standby source with complete isolation of the automatic transfer switch shall be possible.

    b. The load shall not be interrupted during bypass or isolation functions.
        1) Configurations that include load break contacts causing load interruption are not acceptable.
        2) Bypass-isolation contacts shall not be in the circuit except during bypass-isolation operation.
    c. All operations shall be possible with the enclosure door closed.
2. The isolation handle shall have 3 positions: Automatic, Test, and Isolate:
    a. The Test position shall permit electrical testing of the automatic transfer switch without load interruption.
    b. The Isolate position shall completely isolate the transfer switch from both sources and load without actual removal of the line or load conductors:
        1) Allows for removal of the transfer switch.
    c. While in the Test or Isolate positions, the bypass-isolation switch shall function as a manual transfer switch:
        1) Manual transfer shall be independent of the transfer switch position, including transfer switch removal.
        2) Reconnection of load terminals shall not be required.
    d. Operating speed of the bypass-isolation switch contacts shall be independent of the speed of the isolation handle.
3. Furnished with a diagnostic instruction plate located on the enclosure door including the following indication lights:
    a. Normal source available.
    b. Emergency source available.
    c. Bypass switch in normal position.
    d. Bypass switch in emergency position.
    e. Automatic transfer switch in Test position.
    f. Automatic transfer switch isolated.
    g. Automatic transfer switch inhibited.
    h. Automatic transfer switch operator disconnect switch "OFF.”
    i. Automatic transfer switch in normal position.
    j. Automatic transfer switch in emergency position.
4. Furnish an independent engine start circuit:
    a. Automatically starts the generator in bypass-normal/ATS isolated configuration and allows immediate selection of the standby source.

2.06 COMPONENTS (NOT USED)

2.07 ACCESSORIES (NOT USED)

2.08 MIXES (NOT USED)

2.09 FABRICATION (NOT USED)

2.10 FINISHES (NOT USED)

2.11 SOURCE QUALITY CONTROL (NOT USED)

PART 3 EXECUTION

3.01 EXAMINATION (NOT USED)

3.02 PREPARATION (NOT USED)

3.03 INSTALLATION

A. As specified in Section 16050 - Common Work Results for Electrical.

B. Install the equipment in accordance with the accepted installation instructions and anchorage details to meet the seismic and wind load requirements at the Project site.

3.04 ERECTION, INSTALLATION, APPLICATION, AND CONSTRUCTION (NOT USED)

3.05 REPAIR/RESTORATION (NOT USED)

3.06 RE-INSTALLATION (NOT USED)

3.07 COMMISSIONING

A. As specified in Section 01756 - Commissioning.

B. Factory testing:
   1. Complete factory test to verify proper operation of all timers, settings, and operation.
   2. In accordance with UL-1008.

3.08 FIELD QUALITY CONTROL

A. As specified in Section 16050 - Common Work Results for Electrical.

3.09 ADJUSTING (NOT USED)

3.10 CLEANING

A. As specified in Section 16050 - Common Work Results for Electrical.

3.11 PROTECTION

A. As specified in Section 16050 - Common Work Results for Electrical.

3.12 SCHEDULES (NOT USED)

END OF SECTION

THIS PAGE INTENTIONALLY LEFT BLANK

SECTION 16510

LIGHTING: LED LUMINAIRES

PART 1 GENERAL

1.01 SUMMARY

A. Section includes: LED luminaires, drivers, poles, and accessories.

1.02 REFERENCES

A. As specified in Section 16050 - Common Work Results for Electrical.

B. Illuminating Engineering Society of North America (IESNA):
  1. LM-79 - IES Approved Method for the Electrical and Photometric Measurements of Solid-State Lighting Products.
  2. LM-80 - IES Approved Method: Measuring Lumen Maintenance of LED Light Sources.
  3. TM-21 - Projecting Long Term Lumen Maintenance of LED Light Sources.

C. Institute of Electrical and Electronics Engineers (IEEE):
  1. C62.41 - IEEE Recommended Practice for Surge Voltages in Low-Voltage AC Power Circuits.

D. National Electrical Manufacturers Association (NEMA):
  1. 410 - Performance Testing for Lighting Controls and Switching Devices with Electronic Drivers and Discharge Ballasts.

E. Underwriters Laboratories (UL):
  1. 1598 - Luminaires.
  2. 8750 - Light Emitting Diode (LED) Equipment For Use In Lighting Products.

1.03 DEFINITIONS

A. As specified in Section 16050 - Common Work Results for Electrical.

B. Specific definitions and abbreviations:
  1. CCT: Correlated color temperature - Scientific scale to describe how “warm” or how “cool” the light source is, measured in Kelvin. The lower the Kelvin temperature, the warmer the light feels, or appears.
  2. CRI: Color Rendering Index - A quantitative measure of the ability of a light source to reveal the colors of various objects faithfully in comparison with an ideal or natural light source.
  3. Driver - Device that manages power and controls the current flow from AC to DC for an LED lighting product.
  4. Efficacy - Lumen output of a light source per unit of power supplied to that source (lumens per watt).
  5. EMI: Electromagnetic Interference - Electrical interference (noise) generated by electrical and electronic devices.
  6. FC: Foot Candles - Measure of light level on a surface being illuminated.

7. L70 - The extrapolated life in hours of the luminaire when the luminous output depreciates 30 percent from initial values.
8. LED: Light emitting diode - A solid-state semiconductor device that produces light when electrical current flows through it.
9. LED light source - See LED luminaire.
10. LED luminaire - A complete lighting unit consisting of LED-based light emitting elements and a matched driver together with parts to distribute light, to position and protect the light emitting elements, and to connect the unit to a branch circuit.
11. Lumen - The international (SI) unit of luminous flux or quantity of light. The amount of light that is spread over a square foot of surface by one candle power when all parts of the surface are exactly one foot from the light source.
12. Lumen ambient temperature multiplier - LED light source relative lumen output when compared to a standard ambient temperature.
13. Lumen maintenance factor - How well an LED light source is able to retain its intensity when compared to new.
14. Luminaire - Lighting unit.
15. THD: Total harmonic distortion - The combined effect of harmonic Distortion on the AC waveform produced by a driver or other device.

1.04 SYSTEM DESCRIPTION

A. Provide luminaires, and accessories for all lighting systems, complete and operable, in accordance with the requirements of the Contract Documents.

B. Individual luminaire types are indicated on the Drawings and on the Luminaire Schedule.

1.05 SUBMITTALS

A. Furnish submittals as specified in Sections 01330 - Submittal Procedures and 16050 - Common Work Results for Electrical.

B. Product data:
1. LED Luminaires:
    a. Catalog literature for each luminaire specified, cross-referenced to the luminaire type on the Luminaire Schedule in the Drawings.
    b. Provide for each luminaire type:
        1) Materials.
        2) Type of diffuser.
        3) Hardware.
        4) Gasketing.
        5) Reflector.
        6) Chassis.
        7) Finish and color.
        8) Driver type and protection.
        9) LED luminaire:
            a) Initial lumen output at 40 degrees Celsius ambient.
            b) Correlated color temperature.
            c) Lumen maintenance factors.
            d) Lumen ambient temperature multipliers.
            e) Drive current.

        - f) Efficacy.
    - 10) Picture of luminaire.
    - 11) Dimensioned drawings:
        - a) Effective projected area rating for pole mounted luminaires.
    - 12) Weight.
    - 13) Photometric data:
        - a) Coefficient of utilization tables based on the IES zonal cavity system by an approved testing laboratory.
        - b) Luminaire dirt depreciation factor.
        - c) Candlepower distribution curves.
        - d) Average luminaire brightness.
        - e) Lumen output charts.
    - 14) Furnish support method for interior luminaires weighing more than 30 pounds and all wall-mounted luminaires:
        - a) Support methods shall be based on seismic requirements at the project site as specified in Section 16050 - Common Work Results for Electrical.
- c. Luminaire substitutions:
    - 1) Provide complete literature for each luminaire substitution:
    - 2) Submittals for substituted luminaires shall be sufficient for competent comparison of the proposed luminaire to the originally specified luminaire:
        - a) Photometric data:
            - (1) IES file in standard IES format.
            - (2) Coefficient of utilization tables based on the IES zonal cavity system by an approved testing laboratory.
            - (3) Candlepower distribution curves.
            - (4) Average luminaire brightness.
            - (5) Lumen output charts.
            - (6) Power requirements in watts and volt-amperes.
        - b) Calculations:
            - (1) Provide software generated calculations showing illuminance levels in footcandles and power usage in watts per square foot for each of the areas in which substitutions are proposed:
                - (a) Use surface reflectance values and luminaire light loss factors approved by the Engineer to perform all calculations.
        - c) Specification sheets:
            - (1) If lacking sufficient detail to indicate compliance with contract documents, standard specification sheets will not be accepted. This includes, but is not limited to, luminaire type designation, manufacturer's complete catalog number, voltage, LED type, CCT, CRI, specific driver information, system efficacy, L70 life rating, and any modifications necessary to meet the requirements of the contract documents.
    - 3) Substitutions for specified luminaires will be evaluated upon quality of construction, light distribution, energy use, appearance, and maintenance.
    - 4) Substitutions shall comply with all applicable building and energy codes.

2. Driver: Provide for each driver type:
    a. Catalog number.
    b. Type of driver.
    c. Output wattage.
    d. Input voltage.
    e. Operating voltage range.
    f. Maximum input power.
    g. Efficiency.
    h. Operating line current.
    i. Power factor.
    j. Operating temperature range.
    k. Current output range in ambient temperatures of 30 to 55 degrees Celsius.
    l. Surge suppression data.
3. Photocell:
    a. Provide for each photocell type:
        1) Switching capacity.
        2) Life expectancy when used on LED sources.
        3) The means of adjusting the lighting pickup level.
        4) Enclosure type.
        5) Mounting method.
4. Luminaire poles:
    a. Submit complete data for each pole type including but not limited to:
        1) Material.
        2) Finish and color.
        3) Handholes.
        4) Anchoring.
        5) Luminaire attachment methods and fittings.
        6) Pole height.
        7) Pole dimensions.
        8) Bolt hole circle layout and hardware.
        9) Accessories.
        10) Provide the EPA wind load rating.

C. Calculations:
1. Provide complete design calculations and installation documents for pole mounting piers and poles mounted from structures:
    a. Include in the calculations the wind and seismic requirements at the project site.
    b. Calculations and design shall be performed by and signed by a Professional Engineer registered in the state where the project is being constructed:

D. Record documents:
1. Update the Luminaire Schedule in the Drawings to reflect the acceptable substitutions, after the substitution has been reviewed and accepted by the Engineer.

1.06 QUALITY ASSURANCE

A. As specified in Section 16050 - Common Work Results for Electrical.

1.07 DELIVERY, STORAGE, AND HANDLING

A. As specified in Section 16050 - Common Work Results for Electrical.

1.08 PROJECT OR SITE CONDITIONS

A. As specified in Section 16050 - Common Work Results for Electrical.

1.09 SEQUENCING (NOT USED)

1.10 SCHEDULING

A. Exterior and outdoor lighting system operation shall be demonstrated during the hours of darkness.

B. Lighting demonstration shall occur within 2 weeks before substantial completion.

1.11 WARRANTY

A. As specified in Section 16050 - Common Work Results for Electrical.

B. LED luminaire:
   1. 5-year warranty from the date of installation including material, workmanship, photometrics, driver, and LED modules.

1.12 SYSTEM START-UP

A. As specified in Section 16050 - Common Work Results for Electrical.

1.13 OWNER’S INSTRUCTIONS (NOT USED)

1.14 MAINTENANCE

A. Furnish 1 complete spare LED luminaire, with driver, of each type used.

PART 2 PRODUCTS

2.01 MANUFACTURERS

A. Luminaires:
   1. The following or equal:
      a. As noted on the Luminaire Schedule.

B. Drivers:
   1. One of the following or equal:
      a. Philips Advance.
      b. Thomas Research.
      c. Sylvannia.

C. Photo-electric cells:
   1. One of the following or equal:
      a. Inetermatic.

        b. Legrand / Wattstopper.
        c. Tork.

D. Substitutions:
    1. The lighting design and luminaire selection has been based upon the photometric data of the identified luminaire. It is the Contractor's responsibility to ensure and prove to the Engineer at time of submittal the substitutions meet the quality and photometric requirements of the original design.

2.02 EXISTING PRODUCTS (NOT USED)

2.03 MATERIALS (NOT USED)

2.04 MANUFACTURED UNITS (NOT USED)

2.05 EQUIPMENT

A. LED Luminaires:
    1. General:
        a. Pre-wired with leads of 18-AWG, minimum, for connection to building circuits.
        b. Provide the luminaires furnished per the Luminaire Schedule in the Drawings:
            1) The Specifications noted in this Section are an addition or supplement to the Luminaire Schedule.
        c. Individual LEDs connected such that a catastrophic loss or the failure of 1 LED will not result in the loss of the entire luminaire.
    2. Minimum ambient temperature range of 0 degrees Celsius to 40 degrees Celsius.
    3. Minimum rated life:
        a. Office Areas: 70,000 hours when operated at 25 degrees Celsius.
        b. Process Areas: 60,000 hours when operated at 40 degrees Celsius.
        c. Hazardous Areas: 50,000 hours when operated at 40 degrees Celsius.
    4. Minimum efficacy of 70 lumens/watt.
        a. Hazardous Areas: Minimum 60 lumens/watt.
    5. Minimum Color Rendering Index of 70.
    6. Tested according to IESNA LM-79 and LM-80.
    7. Lumen maintenance projection in accordance with IESNA TM-21.
    8. RoHS compliant.
    9. Integral driver.
    10. Suitable for dry, damp, or wet locations as indicated on the Drawings or on the Luminaire Schedule.
        a. Wet or damp locations: UL 1598 listed.
    11. Designed as a complete LED assembly. Retrofit LED lamps in luminaires not designed specifically for LED light sources shall not be used.
    12. Exterior/outdoor luminaires:
        a. Luminaires in combination with their mounting pole and bracket shall be capable of withstanding:
            1) Wind levels at the project site without damage.
        b. Corrosion-resistant hardware and hinged doors or lens retainer.
        c. Luminaires furnished with integral photoelectrical control shall be of the luminaire manufacturer's standard design.

B. Photo-electric cells:
  1. Photoelectric cells for control of multiple luminaires:
    a. Self-contained.
    b. Weatherproof.
    c. Provided with time-delay features.
    d. Sized to meet switching capacity of the circuit:
      1) Based on luminaire VA as indicated on the Drawings.
  2. Photoelectric cell for control of a single luminaire:
    a. Integral to the luminaire.

C. Luminaire control:
  1. Lighting control relays or contactors as specified in Section 16422 - Motor Starters.

D. Drivers:
  1. Dimmable, with dimming signal protocol of 0-10 VDC or DALI.
  2. Input power source:
    a. As indicated on the Drawings.
  3. Drive current:
    a. As indicated in the Luminaire Schedule.
  4. Power factor: greater than 0.90.
  5. Efficiency: greater than 80 percent.
  6. Total harmonic distortion (THD) of the input current less than 20 percent.
  7. Rated life of 60,000 hours in an LED luminaire operated at an ambient temperature of 40 degrees Celsius.
  8. Minimum operating temperature of 0 degrees Celsius.
  9. Sound rating: Class A+ or quieter.
  10. UL listed Class 2 Outdoor in accordance with UL 8750.
  11. In accordance with IEEE C62.41 Category A for transient protection.
  12. Driver must limit inrush current:
    a. Meet or exceed NEMA 410 driver inrush standard:
      1) 230 Amps per 10 Amp load with a maximum of 106 Amps squared-seconds at 120V.
      2) 430 Amps per 10 Amp load with a maximum of 370 Amps squared-seconds at 277V.

2.06 COMPONENTS

A. Luminaire poles:
  1. As indicated on the Luminaire Schedule.
  2. Anchor bolts:
    a. Use anchor bolts, bolts, or welded studs for anchors for resisting seismic and wind forces.
      1) Standard hex bolt head.
      2) Do not use anchor bolts fabricated from rod stock with an L or J-shape.
    b. Complete with leveling shims.
  3. Anchor base:
    a. Fabricated from the same type of material as the pole shaft.
    b. Base plate to telescope the pole shaft.
    c. Welded top and bottom along the entire perimeter.
    d. With slotted bolt holes on the bolt circles as submitted.

4. Pole shaft:
   a. As indicated on the Luminaire Schedule.
5. Handhole:
   a. Reinforced handhole located approximately 18 inches above the base.
   b. Complete with cover fabricated from the same material as the pole shaft and stainless steel attachment screws.
   c. With an integral ground connection nut, 1/2 inch by 13-inch UNC welded to the pole for connection to the grounding system.
6. Shroud:
   a. Fabricated from the same type of material as the pole shaft.
   b. 1-piece formed channel section that shall conform to the pole shaft taper.
   c. Secured by a locking device with provisions for a padlock to prevent accidental lowering.
7. Fastening hardware:
   a. All fasteners shall be stainless steel.
8. Finish:
   a. As indicated on the Luminaire Schedule.

2.07 ACCESSORIES

A. Pole mounted convenience outlet:
   1. Where indicated, furnish a 120 Volt, GFCI protected receptacle:
      a. Integrally mounted in the pole shaft at 24 inches above the base.
   2. Complete with corrosion resistant and weatherproof cover.

2.08 MIXES (NOT USED)

2.09 FABRICATION (NOT USED)

2.10 FINISHES (NOT USED)

2.11 SOURCE QUALITY CONTROL (NOT USED)

PART 3 EXECUTION

3.01 EXAMINATION (NOT USED)

3.02 PREPARATION (NOT USED)

3.03 INSTALLATION

A. As specified in Section 16050 - Common Work Results for Electrical.

B. Install luminaires per the manufacturer’s guidelines and submitted installation calculations to meet seismic and wind requirements at the project site.

C. Special techniques:
   1. Support luminaires from structural elements capable of carrying the total weight.

2. Install luminaires plumb and square with building and wall intersections:
    a. Suspend pendant-mounted luminaries that are mounted from sloping ceilings with ball hangers, unless otherwise indicated on the Drawings.
    b. Install luminaires in machinery rooms after machines have been installed, so as to ensure no conflict with machinery, piping, or ductwork.
3. In all cases, coordinate luminaire locations with work of other trades to prevent obstruction of light from the fixtures:
    a. Locate bottom of luminaire approximately at the bottom of ductwork, unless otherwise specified or indicated on the Drawings.
4. Support luminaires weighing more than 25 pounds independently of the outlet box and the conduit.
5. Provide ceiling or pendent mounted luminaires with a safety chain connecting the lens, driver, and other components to the building structure.
6. Provide recessed luminaires with auxiliary safety supports attached directly to the building structure:
    a. The safety supports shall consist of number 12 AWG soft drawn galvanized wires.
7. Install luminaires in accordance with the architectural reflected ceiling Drawings:
    a. Center luminaires on ceiling tiles unless otherwise indicated.
8. Support luminaires installed in suspended grid ceilings, independently of the grid:
    a. Provide seismic restraint clips for all luminaires installed in suspended grid ceilings.

D. Luminaire poles:
1. Set poles on anchor bolts and secured with double nuts on each bolt.
2. Dry pack the pole base, after the luminaire and pole has been leveled and plumbed.
3. Bond metal poles to the plant grounding system, utilizing a ground lug connection within the pole:
    a. Route ground conductor through pier and pole base sleeve using Schedule 40 PVC conduit.

3.04 ERECTION, INSTALLATION, APPLICATION, CONSTRUCTION (NOT USED)

3.05 REPAIR/RESTORATION (NOT USED)

3.06 RE-INSTALLATION (NOT USED)

3.07 COMMISSIONING

A. As specified in Section 01756 - Commissioning.

3.08 FIELD QUALITY CONTROL

A. As specified in Section 16050 - Common Work Results for Electrical.

3.09 ADJUSTING

A. Aim and verify all exterior and outdoor luminaires alignment, during dark evening hours, as directed by Owner or the Engineer.

3.10 CLEANING

A. As specified in Section 16050 - Common Work Results for Electrical.

B. Clean all lenses, diffusers, and reflectors.

C. Refinish all luminaires’ trim, poles, and support brackets, where finish has been damaged.

D. Clean all LED luminaires (new and old), used during construction for construction lighting, before substantial completion.

E. Clean and re-lamp all existing fluorescent and HID luminaires used during construction for construction lighting, before substantial completion.

3.11 PROTECTION

A. As specified in Section 16050 - Common Work Results for Electrical.

3.12 SCHEDULES

A. Refer to the Luminaire Schedule in the Drawings.

END OF SECTION

SECTION 16670

LIGHTNING PROTECTION

PART 1 GENERAL

1.01 SUMMARY

A. Section includes:
   1. Design and installation of a complete lightning protection system.
   2. Materials and components for the lightning protection system.

1.02 REFERENCES

A. As specified in Section 16050 - Common Work Results for Electrical.

B. Lightning Protection Institute (LPI).

C. National Fire Protection Association (NFPA):
   1. 780 - Standard for the Installation of Lightning Protection Systems.

D. Underwriters Laboratories, Inc. (UL):
   1. 96 - Standard for Lightning Protection Components.
   2. 96A - Standard for Installation Requirements for Lightning Protection Systems.

1.03 DEFINITIONS

A. As specified in Section 16050 - Common Work Results for Electrical.

B. Specific definitions:
   1. LPI: Lightning Protection Institute.

1.04 SYSTEM DESCRIPTION

A. Retain the services of a lightning protection contractor to design, furnish, and install a complete lightning protection system, connected to the facility grounding system.

B. Lightning protection system: NFPA 780; Class I UL 96A; master labeled system(s) protecting structures and personnel, consisting of:
   1. Air terminals on roof(s).
   2. Bonding of structure and other metal objects.
   3. Grounding electrodes.
   4. Interconnecting conductors.

C. Connect the lightning protection system to the facility grounding electrode:
   1. Provide common ground connections as necessary to the electric and communication service conductors.

D. Coordinate requirements of lightning protection system with surge protective devices and verify surge protective devices are installed correctly and meet the requirements of UL 96A.

E. The installing contractor is responsible for all costs associated with UL inspection of the lightning protection system, including any costs associated with re-inspection necessary to obtain the UL 96A Master Label.

F. Structures to be protected:
   1. Electrical / Control Building.
   2. Ground Storage Tank.
   3. Sodium Hypochlorite Canopy.

1.05 SUBMITTALS

A. Furnish submittals as specified in Sections 01330 - Submittal Procedures and 16050 - Common Work Results for Electrical.

B. Product data:
   1. Provide samples and pertinent catalog data for:
      a. Air terminals.
      b. Conductors.
      c. Connectors.
      d. Accessories.
      e. Include dimensions and materials of each component and include indication of listing in accordance with UL 96.

C. Shop drawings:
   1. Including but not limited to:
      a. Layout of air terminals with the respective configuration of the zone of protection.
      b. Grounding electrodes, and bonding connections to structure and other metal objects.
      c. Type, size and locations for:
         1) Terminal.
         2) Electrode.
         3) Conductor.
      d. Conductor routing details.
      e. Connection details.
      f. Termination details.
      g. Applicable air terminal and other calculations.
   2. Details showing installation of air terminals, conductors, and connectors.

D. Certificates:
   1. Submit 2 notarized photocopies of the completed Application for UL Master Label for each lightning protection system.
   2. Submit written confirmation of having obtained UL Master Label for each lightning protection system.
   3. Photocopy of UL Installers' Certificate(s) for installation of lightning protection systems.

E. Record Documents:
   1. Provide Record Documents as specified in Sections 01770 - Closeout Procedures and 16050 - Common Work Results for Electrical.
   2. Accurately record actual locations of air terminals, grounding electrodes, bonding connections, and routing of system conductors.
   3. Manufacturer's installation instructions.

1.06 QUALITY ASSURANCE

A. As specified in Section 16050 - Common Work Results for Electrical.

B. Conform to the requirements of the UL and NFPA standards for lightning protection systems:
  1. Components shall be listed in accordance with UL 96.

C. Manufacturer's qualifications:
  1. Company specializing in lightning protection equipment with minimum 5 years of documented experience and a fully certified manufacturer member of the Lightning Protection Institute.

D. Installers qualifications:
  1. Authorized installer for manufacturer with minimum 5 years of experience.

E. The lightning protection system shall meet the applicable requirements of NFPA 780.

F. Upon completion of installation the lightning protection contractor to have the building lightning system physically inspected by UL and furnish a UL Master Label for the building:
  1. Application for the UL Master Label without a physical inspection by UL is unacceptable.

1.07 DELIVERY, STORAGE, AND HANDLING

A. As specified in Section 16050 - Common Work Results for Electrical.

1.08 PROJECT OR SITE CONDITIONS (NOT USED)

1.09 SEQUENCING

A. Pre-installation conference:
  1. Convene a pre-installation conference 1 week before commencing the Work of this Section, as specified in Sections 01312 - Project Meetings and 16050 - Common Work Results for Electrical.

B. Coordinate Work with other trades to ensure neat, correct, and unobtrusive installation.

C. Coordinate the Work of this Section with roofing and exterior and interior finish installations.

1.10 SCHEDULING (NOT USED)

1.11 WARRANTY

A. As specified in Section 16050 - Common Work Results for Electrical.

1.12 SYSTEM START-UP

A. As specified in Section 16050 - Common Work Results for Electrical.

1.13 OWNER'S INSTRUCTIONS (NOT USED)

1.14 MAINTENANCE (NOT USED)

PART 2 PRODUCTS

2.01 MANUFACTURERS

A. One of the following or equal:
  1. Erico.
  2. Thompson Lightning Protection, Inc.
  3. Harger Lightning and Grounding.

2.02 EXISTING PRODUCTS (NOT USED)

2.03 MATERIALS

A. Air terminals:
  1. Material: Copper.
  2. Size: 3/8-inch by 18-inch minimum extending a minimum of 12 inches above the object to be protected.
  3. On flat or walkable roofs, provide air terminals with:
    a. Mushroom type blunt tip incapable of impalement if fallen upon.
    b. Spring mounted and capable of being pushed flush to the roof.
  4. Air terminal bases:
    a. Cast bronze with bolt pressure cable connections securely mounted with stainless steel screws and bolts.

B. Ground rods:
  1. As specified in Section 16060 - Grounding and Bonding.

C. Ground plate: Copper.

D. Conductors:
  1. Perimeters:
    a. Copper.
  2. Down conductors:
    a. Copper.
  3. At least 32 strands of 17 gauge or larger copper wire weighing not less than 215 pounds per 1000 feet.
  4. UL listed for the application.
  5. Copper:
    a. Perimeters and down conductors:
      1) At least 32 strands of 17 gauge or larger copper wire weighing not less than 215 pounds per 1,000 feet.
      2) UL listed for the application.
  6. Cable fasteners:
    a. Electrolytically compatible with conductors and mounting surface:
      1) Spaced in accordance with LPI and NFPA requirements.

E. Connectors and splicers: Bronze:
   1. Make connections between dissimilar metals with approved bimetallic connectors.

F. Miscellaneous materials:
   1. Copper of type and size recommended by the manufacturer of the lightning protection system.
   2. Stainless steel bolts, screws, and other threaded fasteners.

G. System: Aluminum components for aluminum roofing, compatible with aluminum roofing materials; mechanical connectors and transition joints between aluminum and copper, suitable, properly installed by trained personnel.

2.04 MANUFACTURED UNITS (NOT USED)

2.05 EQUIPMENT (NOT USED)

2.06 COMPONENTS (NOT USED)

2.07 ACCESSORIES (NOT USED)

2.08 MIXES (NOT USED)

2.09 FABRICATION (NOT USED)

2.10 FINISHES (NOT USED)

2.11 SOURCE QUALITY CONTROL (NOT USED)

PART 3 EXECUTION

3.01 EXAMINATION

A. It is the responsibility of the lightning protection subcontractor to review the electrical system design and provide any and all additional equipment and materials needed in order to construct a master labeled UL lightning protection system.

B. Verify that surfaces are ready to receive work.

C. Verify that field measurements are as indicated on the Drawings. Scale lengths from civil and mechanical drawings.

D. Protect elements surrounding Work of this Section from damage or disfiguration.

3.02 PREPARATION (NOT USED)

3.03 INSTALLATION

A. As specified in Section 16050 - Common Work Results for Electrical.

B. Install systems in accordance with manufacturer's instructions unless otherwise specified in this Section.

C. Installation must be made under the supervision of an LPI certified master installer.

D. Conductor installations:
   1. Install the lightning protection roof system(s) grounding and bending conductors exposed on flat roof areas and concealed at ridge roof areas.
   2. Install main downleads completely concealed and sleeved.
   3. Use minimum 1-inch PVC conduits to protect lightning system conductors from damage.

E. Clearances: Ensure 6-foot minimum distance required by NEC:
   1. From lightning rod conductors to non-current-carrying metal parts of electrical equipment unless they are bonded to the rods.
   2. From lightning system conductors to open conductors of communication systems.
   3. From lightning protection grounding electrodes to electrodes of other grounding systems.

F. Extend air terminals a minimum of 12 inches above object to be protected.

G. Maintain horizontal or downward coursing of main conductor and ensure that bends have at least an 8-inch radius and that no bend of a conductor forms an included angle of less than 90 degrees.

H. Install ground electrodes not less than 1 foot below grade and not less than 2 feet from foundation walls.

I. Interconnection of metals:
   1. Bond all metal bodies within 6 feet of the conductor to the system with approved fittings and conductor.
   2. Connections between dissimilar metals shall be made with approved bimetallic connections.
   3. Bond metal bodies of inductance located within 6 feet of a conductor or object with secondary bonds.

J. Bond all isolated metallic bodies at or below the roof subject to inductance and within 6 feet of lightning protection system conductors.

K. Provide necessary common grounds between the lightning protections system and the electric and telephone service entrance wires, TV and radio antenna grounds.

L. Ensure that air terminals are installed to withstand calculated wind force due to 100 miles per hour winds or as specified in Section 01614 - Wind Design Criteria, whichever is greater with a 1.3 gust factor without structural damage and without damage to integrity of the lightning protection system.

M. Protect down conductors entering corrosive soil against corrosion by a protective coating for not less than 3 feet above grade level and for the entire length below grade level until connection to the ground ring and rods.

3.04 ERECTION, INSTALLATION, APPLICATION, CONSTRUCTION (NOT USED)

3.05 REPAIR/RESTORATION (NOT USED)

3.06 REINSTALLATION (NOT USED)

3.07 COMMISSIONING

A. As specified in Section 01756 - Commissioning.

3.08 FIELD QUALITY CONTROL

A. As specified in Section 16050 - Common Work Results for Electrical.

B. Provide the services of UL to physically inspect the entire lightning protection system and issue the UL Master Label:
   1. Furnish UL Master Label as evidence that the installation has met with UL 96A code requirements.

3.09 ADJUSTING (NOT USED)

3.10 CLEANING (NOT USED)

3.11 PROTECTION

A. As specified in Section 16050 - Common Work Results for Electrical.

3.12 SCHEDULES (NOT USED)

END OF SECTION

THIS PAGE INTENTIONALLY LEFT BLANK

SECTION 16756

VIDEO SURVEILLANCE REMOTE DEVICES AND SENSORS

PART 1 GENERAL

1.01 SUMMARY

A. Section includes:
  1. Closed circuit television security systems.

1.02 REFERENCES

A. As specified in Section 16050 - Common Work Results for Electrical.

B. Institute of Electrical and Electronics Engineers (IEEE):
  1. 802.3 - Standard for Information Technology-Specific requirements - Part 3: Carrier Sense Multiple Access with Collision Detection (CSMA/CD) Access Method and Physical Layer Specifications.

C. National Electrical Manufacturers Association (NEMA):
  1. 250 - Enclosures for Electrical Equipment (1000 V Maximum).

D. Underwriters Laboratories, Inc. (UL).

1.03 DEFINITIONS

A. As specified in Section 16050 - Common Work Results for Electrical.

B. NEMA:
  1. Type 4 enclosure in accordance with NEMA 250.

1.04 SYSTEM DESCRIPTION

A. The close circuit television (CCTV) system is comprised of a series of devices including:
  1. Pan tilt zoom (PTZ) hi-speed dome or platform cameras monitoring perimeter and other areas.
  2. Fixed cameras monitoring gates and internal areas.

B. Where possible, and unless otherwise approved by the Engineer and the Owner, all CCTV products shall be from the same manufacturer.

C. This Project requires the installation of IP video cameras. All cameras will be available for viewing and control from workstations and servers located on a security WAN or LAN.
  1. A networked digital video management system (NDVMS) will be provide by the Owner for viewing, recording, and management of digital video. The digital recorders will record all cameras.
  2. Operators will have the capability to control the PTZ cameras through the IP interface with the NDVMS.

3. The completed installation will be fully functional with approved components. No custom design will be allowed without prior written approval from the Owner.
4. All components provided will be compatible with the Owner's Exacqvision Video Management System.

1.05 SUBMITTALS

A. Furnish submittals as specified in Sections 01330 - Submittal Procedures and 16050 - Common Work Results for Electrical.

B. Product data:
   1. Manufacturer of all equipment.
   2. Model numbers of all components.
   3. Bill of material.
   4. Electrical requirements:
      a. Voltage.
      b. Power.
   5. Manufacturer's catalog data sheets for all components.
   6. Warranty documentation.

C. Shop drawings:
   1. Complete engineered drawings indicating:
      a. Layout, wiring diagrams and dimensions.
      b. Point-to-point wiring diagrams for all devices.
      c. Termination details for all devices.
      d. Single-line system architecture drawings representing the entire system.

D. Installation instructions:
   1. Manufacturer's installation instructions.

E. Operation and maintenance manuals:
   1. Complete documentation shall be provided with the system.
      a. The documentation shall completely describe all operations, each program, data sets, and the hardware and peripherals.
      b. All updates, addendum, and adjustments to the documentation shall be provided at no additional charge, in the same quantities as originally required.
      c. Each Division shall define the initial quantities:
         1) System administrator manual: Overview and step-by-step guide and instructions detailing all system administrator responsibility and authority.
         2) User manual: Step-by-step guide and instructions detailing all system user functions and responsibilities.
         3) Photo imaging user's manual: Step-by-step guide and instructions detailing all image capture, badge creation, cardholder modification, and all photo imaging user functions and responsibilities.
         4) Alarm monitoring manual: Step-by-step guide and instructions detailing all alarm monitoring system user functions, and responsibilities.
         5) Technical maintenance manual: Shall be a comprehensive and detailed document providing all maintenance action, system testing

schedules, troubleshooting flowcharts, functional system layout and block diagrams, and schematic diagrams of all system wiring.

6) Where appropriate, this documentation may have been provided as part of the head end.

1.06 QUALITY ASSURANCE

A. As specified in Section 16050 - Common Work Results for Electrical.

B. CCTV supplier/installer qualifications:
   1. Company specializing in the installation of CCTV, networked digital video management systems (NDVMS), and design and installation of cabling and fiber infrastructures with a minimum of 5 years documented experience in successful completion of a minimum of 3 projects similar in scope and cost.
   2. Minimum of 2 factory-trained and certified technicians on staff for the duration of the project and the warranty period.

1.07 DELIVERY HANDLING AND STORAGE

A. As specified in Section 16050 - Common Work Results for Electrical.

1.08 PROJECT OR SITE CONDITIONS

A. As specified in Section 16050 - Common Work Results for Electrical.

1.09 SEQUENCING (NOT USED)

1.10 SCHEDULING (NOT USED)

1.11 WARRANTY

A. As specified in Section 16050 - Common Work Results for Electrical.

1.12 SYSTEM START-UP (NOT USED)

1.13 OWNERS INSTRUCTIONS (NOT USED)

1.14 MAINTENANCE (NOT USED)

PART 2 PRODUCTS

2.01 MANUFACTURERS

A. One of the following or equal:
   1. Axis.
   2. Schneider Electric - Pelco.
   3. Bosch.

2.02 EXISTING PRODUCTS (NOT USED)

2.03 MATERIALS (NOT USED)

2.04 MANUFACTURED UNITS (NOT USED)

2.05 EQUIPMENT

A. Outdoor fixed cameras:
   1. Fixed (Non-PTZ) PoE camera:
      a. 1/3-inch 3-megapixel (MPx) resolution.
      b. Progressive scan.
      c. Automatic day/night mode (color/black white).
      d. IR illumination: Up to 35 m, auto ON in night mode, or OFF.
      e. Minimum 52 db S/N ratio.
      f. Digital noise reduction: On/Off selectable.
      g. Minimum illumination of .01 lux at F 1.2, in night (BW) mode.
   2. Lens:
      a. Camera to include a built-in CS mount 1/3-inch, 3- to 9-millimeter varifocal aspherical DC auto-iris lens.
      b. Autofocus, motorized.
      c. Zoom: Remote.
   3. Video specifications:
      a. Video streams: Up to 2 simultaneous streams; plus service stream; the second stream is variable based on the setup of the primary stream.
      b. Text overlay: Camera name, time, date, and customizable text with multiple languages supported.
      c. Available resolutions: 2 configurable streams as follows:
         1) 3.1 megapixel 2,048 by 1,536; 4:3 aspect ratio.
      d. Frame rate: Up to 30, 25, 20, 16.67,15, 12.5, 10, 5, 1 (depending on the coding, resolution, and stream configuration).
      e. Video encoding: H.264 high or main profiles; and MJPEG.
      f. Bit rate control: Constant bit rate (CBR), constrained variable bitrate (CVBR) with configurable maximum value.
      g. Service stream: 640 x 480 or 640 x 352;2 ips, JPEG.
      h. Window blanking: 4 configurable windows.
      i. Supported protocols: TCP/IP, UDP/IP (Unicast, Multicast IGMP), ICMP, IPv4, IPv6, SNMP v2c/v3, HTTP, HTTPS, SSL, SSH, SMTP, FTP, RTSP, UPnP, DNS, NTP, RTP, RTCP, LDAP (client), QoS.
      j. Users:
         1) Unicast: 1 administrator, up to 4 viewers.
         2) Multicast: Unlimited H.264.
      k. Security access: Multiple user access levels password protection.
      l. Web browser access.
   4. Environmental:
      a. PoE power: Provide manufacturer PoE injector. Provide additional long-span injectors as required for installations over 300 feet.
      b. Operating temperature: -40 degrees Celsius to 50 degrees Celsius (-40 degrees Fahrenheit to 122 degrees Fahrenheit).
      c. Operating humidity:15 to 85 percent, RH condensing.
      d. Shock and vibration: IEC 60068:2-27; IEC 60062:2-6.
      e. Ingress protection: IP66 per IEC 60529; NEMA Type 4X.
      f. Vandal resistance: IK10 (20J impact) per IEC 62262.
      g. Mounted in an extruded and die-cast aluminum wall mount housing meeting NEMA Type 4 and IP66 standards, with a heater and blower.

B. PTZ camera:

1. Camera specifications:
    a. Sensor type: 1/3-inch CMOS Sensor.
    b. Images per Second (ips): 30.
    c. Optical zoom: 20X.
    d. Digital zoom: 12X.
    e. Maximum resolution: 1,920 by 1,080.
    f. Lens: f/1.6 ~ f/4.2focal length 4.3 millimeters (wide) ~ 86.0 millimeters (tele).
    g. Horizontal angle of view: 55.4 degrees (wide) ~ 2.9 degrees (tele).
    h. Aspect ratio:16:9.
    i. Dynamic range: 60 dB.
    j. White balance range: 2,5000 degrees to 8,000 degrees K.
    k. 3D noise reduction: Yes (ON/OFF selectable).
    l. Signal to noise ratio: 50 dB.
    m. Light sensitivity: Sensitivity in lux for 90 percent reflectance,f/1.6 (wide angle), 24 dB noise at 30 IRE (30 percent of signal level):
        1) Color: (33 ms) 0.3 lux.
        2) Color: (200 ms) 0.08 lux.
        3) Mono: (33 ms) 0.1 lux.
        4) Mono: (200 ms) 0.015 lux.
    n. Day/night capabilities: Yes.
    o. IR cut filter: Yes.
    p. Iris control: Auto iris.
    q. Automatic gain control: Yes.
    r. Active noise filtering: Yes.
2. Video specifications:
    a. Video encoding: H.264 high, main, or base profiles and MJPEG.
    b. Video streams: Up to 2 simultaneous streams, the second stream is variable based on the setup of the primary stream.
    c. Frame rate: Up to 30, 25, 20, 16.67, 15, 12.5, 10, 7.5,5, 3, 2, 1 (depending upon coding,resolution, and stream configuration).
    d. Available resolutions:
        1) 16:9 aspect ratio: 2.07 MPx (1920 x 1080); 30 ips max.
        0.92 MPx (1280 x 720); 30 ips max.
        0.59 MPx (1024 x 576); 30 ips max.
        0.52 MPx (960 x 540); 25 ips max.
        0.23 MPx (640 x 352); 30 ips max.
        0.06 MPx (320 x 180); 30 ips max.
    e. Supported protocols: TCP/IP, UDP/IP (Unicast, Multicast IGMP), UPnP, DNS, DHCP, RTP, RTSP, NTP, IPv4, SNMP v2c/v3, QoS, HTTP, HTTPS, LDAP (client), SSH, SSL, SMTP, FTP, and 802.1x (EAP).
    f. Users:
        1) Unicast: 1 admin and up to 4 viewers simultaneously depending on resolution settings (2 guaranteed streams).
        2) Multicast: Unlimited H.264.
    g. Security: Access password protected.
    h. Software interface: Web browser view and setup.
    i. Open API: ONVIF.

        j. Video motion detection: Simple motion detection and camera sabotage:
            1) Local storage up to 32GB SD onboard; Micro SD, SDHC compatible (see manual for details) Capture 1-, 5-, or 10-second video clips on camera sabotage, motion detection, or alarm input (accessible using FTP protocol); record video continuously using ONVIF Profile G
    3. Electrical specifications:
        a. Ports RJ-45 for 100 Base-TX; Auto MDI/MDI-X;Auto negotiate/manual setting.
        b. Power PoE: Provide manufacturer PoE injector. Provide additional long-span injectors as required for installations over 300 feet.
    4. Dome drive specifications:
        a. Pan movement: 360 degrees continuous pan rotation.
        b. Presets: 128 positions.
        c. Tours: 16.
        d. Preset accuracy: Pan ±0.1 degrees; Tilt ±0.05 degrees.
        e. Motor: Continuous duty and variable speed.
        f. Window blanking: 8 blanked windows, configurable in size.
        g. Auto flip: Rotates dome 180 degrees at bottom of tilt travel.
    5. Back box and lower dome specifications:
        a. Pendant, environmental:
            1) Cable entry: Through 1.5-inch NPT fitting.
            2) Environmental features: Factory-installed heaters.
            3) Environmental rating: Type 4X Enclosure, IP66.
            4) Operating temperatures: -40 degrees Celsius to 50 degrees Celsius (-40 degrees Fahrenheit to 122 degrees Fahrenheit).
            5) Operating humidity: 20 percent to 80 percent (non-condensing).
            6) Vandal resistance: K10 (20J).
            7) Construction: Aluminum.
            8) Dome: Smoked.

C. Environmental enclosure (domes):
    1. Environmental housing with heater/blower functions.
    2. Vandal and bullet resistant.
    3. NEMA Type 4/IP66 rated:
        a. Suitable for corrosive and caustic environments.

D. Brackets:
    1. Extruded and die-cast aluminum wall mount housing meeting NEMA Type 4 and IP66 standards.

E. Power supply:
    1. Power over Ethernet (PoE).
    2. Provide manufacturer’s PoE injectors.
    3. Provide mid-span or long-span injectors as required for long runs or separately power cameras with 120Vac and provide fiber optic communication to cameras.
    4. UL listed and labeled.
    5. Specifically designed for CCTV installations.

F. Media converter:
    1. Provide media converters in accordance with Section 17733 - Network Materials and Equipment.

PART 3 EXECUTION

3.01 EXAMINATION (NOT USED)

3.02 PREPARATION (NOT USED)

3.03 INSTALLATION

A. Installation shall include the appropriate equipment and shall be performed by a factory-trained and certified contractor. The installation shall be completed to the Contract Documents as required by the Owner or prime Contractors. The installation shall include the following:
   1. Site planning and system configuration of field hardware.
      a. The Contractor shall consult with the Owner and Engineer for final required camera settings and placements, home positions, alarm positions, and pan, tilt, and zoom settings.
      b. Owner will complete setup of cameras and configuration of recording devices.
   2. Owner will complete system setup at the head end and workstations.
   3. Owner will setup specific network software configuration requirements.
   4. Complete system diagnostics verification.
   5. Complete system operation verification.
   6. Test operation of cameras with Owner to ensure cameras operate in accordance with specifications and drawings.

B. All wire and cable will be labeled with an appropriate identification code attached to the cable near the termination. This code will indicate the source camera. Codes will be similarly addressed in the as-built drawings.

3.04 ERECTION, INSTALLATION, APPLICATION, CONSTRUCTION (NOT USED)

3.05 REPAIR RESTORATION (NOT USED)

3.06 RE-INSTALLATION (NOT USED)

3.07 COMMISSIONING

A. As specified in Section 01756 - Commissioning.

3.08 FIELD QUALITY CONTROL

A. Install cameras in compliance with the manufacturer’s instructions.
   1. Anchor products securely in place, accurately located and aligned with other work.

3.09 ADJUSTING

A. Adjust all cameras to avoid obstructions and provide a clear field of view.

3.10 CLEANING

A. As specified in Section 16050 - Common Work Results for Electrical.

3.11 PROTECTION

A. As specified in Section 16050 - Common Work Results for Electrical.

3.12 SCHEDULES (NOT USED)

END OF SECTION

SECTION 16950

FIELD ELECTRICAL ACCEPTANCE TESTS

PART 1 GENERAL

1.01 SUMMARY

A. Section includes:
   1. Responsibilities for testing the electrical installation.
   2. Adjusting and calibration.
   3. Acceptance tests.

B. Copyright information:
   1. Some portions of this Section are copyrighted by the InterNational Electrical Testing Association, Inc. (NETA). See NETA publication ATS for details.

1.02 REFERENCES

A. As specified in Section 16050 - Common Work Results for Electrical.

B. American National Standards Institute (ANSI).

C. ASTM International (ASTM):
   1. D877 - Standard Test Method for Dielectric Breakdown Voltage of Insulating Liquids Using Disk Electrodes.
   2. D923 - Standard Practices for Sampling Electrical Insulating Liquids.
   3. D971 - Standard Test Method for Interfacial Tension of Oil against Water by the Ring Method.
   4. D974 - Standard Test Method for Acid and Base Number by Color-Indicator Titration.
   5. D1298 - Standard Test Method for Density, Relative Density, or API Gravity of Crude Petroleum and Liquid Petroleum Products by Hydrometer Method.
   6. D1500 - Standard Test Method for ASTM Color of Petroleum Products (ASTM Color Scale).
   7. D1524 - Standard Test Method for Visual Examination of Used Electrical Insulating Oils of Petroleum Origin in the Field.
   8. D1816 - Standard Test Method for Dielectric Breakdown Voltage of Insulating Liquids Using VDE Electrodes.
   9. D2285 - Standard Test Method for Interfacial Tension of Electrical Insulating Oils of Petroleum Origin against Water by the Drop Weight Method.
   10. D3612 - Standard Test Method for Analysis of Gases Dissolved in Electrical Insulating Oil by Gas Chromatography.

D. Institute of Electrical and Electronics Engineers (IEEE):
   1. 43 - IEEE Recommended Practice for Testing Insulation Resistance of Rotating Machinery.
   2. 81 - IEEE Guide for Measuring Earth Resistivity, Ground Impedance, and Earth Surface Potentials of a Grounding System.
   3. 95 - IEEE Recommended Practice for Insulation Testing of AC Electric Machinery (2300 V and Above) With High Direct Voltage.

4. 421.3 - IEEE Standard for High-Potential Test Requirement for Excitation Systems for Synchronous Machines.
5. 450 - IEEE Recommended Practice for Maintenance, Testing, and Replacement of Vented Lead-Acid Batteries for Stationary Applications.
6. 1106 - IEEE Recommended Practice for Installation, Maintenance, Testing, and Replacement of Vented Nickel-Cadmium Batteries for Stationary Applications.
7. 1188 - IEEE Recommended Practice for Maintenance, Testing, and Replacement of Valve-Regulated Lead-Acid (VRLA) Batteries for Stationary Applications.
8. C57.13 - IEEE Standard Requirements for Instrument Transformers.
9. C57.13.1 - IEEE Guide for Field Testing of Relaying Current Transformers.
10. C57.13.3 - IEEE Guide for Grounding of Instrument Transformer Secondary Circuits and Cases.
11. C57.104 - IEEE Guide for the Interpretation of Gases Generated in Oil-Immersed Transformers.

E. Insulated Cable Engineer's Association (ICEA).

F. International Electrical Testing Association (NETA).
  1. ATS-2009 Standard for Standard for Acceptance Testing Specifications for Electrical Power Equipment and Systems.

G. International Electrotechnical Commission (IEC).

H. Manufacturer's testing recommendations and instruction manuals.

I. National Fire Protection Association (NFPA):
  1. 70 - National Electrical Code (NEC).
  2. 110 - Standard for Emergency and Standby Power Systems.

J. National Institute of Standards and Technology (NIST).

K. Specification sections for the electrical equipment being tested.

L. Shop drawings.

1.03 DEFINITIONS

A. As specified in Sections 01756 - Commissioning and 16050 - Common Work Results for Electrical.

B. Specific definitions:
  1. Testing laboratory: The organization performing acceptance tests.

1.04 SYSTEM DESCRIPTION

A. Testing of all electrical equipment installed under this Contract in accordance with the manufacturer's requirements and as specified in this Section.

B. Conduct all tests in the presence of the Engineer or the Engineer's representative:
  1. Engineer will witness all visual, mechanical, and electrical tests, and inspections.

C. The testing and inspections shall verify that the equipment is operational within the tolerances required and expected by the manufacturer, and these Specifications.

D. Responsibilities:
   1. Contractor responsibilities:
      a. Ensure that all resources are made available for testing, and that all testing requirements are met.
   2. Electrical subcontractor responsibilities:
      a. Perform routine tests during installation.
      b. Demonstrate operation of electrical equipment.
      c. Commission the electrical installation.
      d. Provide the necessary services during testing, and provide these services to the testing laboratory, Contractor, and other subcontractors, including but not limited to:
         1) Providing electrical power as required.
         2) Operating of electrical equipment in conjunction with testing of other equipment.
         3) Activating and shutting down electrical circuits.
         4) Making and recording electrical measurements.
         5) Replacing blown fuses.
         6) Installing temporary jumpers.
   3. Testing laboratory responsibilities:
      a. Perform all acceptance tests specified in this Section.
      b. Provide all required equipment, materials, labor, and technical support during acceptance tests.

E. Upon completion of testing or calibration, attach a label to all serviced devices:
   1. The label shall indicate the date serviced and the company that performed the service.

1.05 SUBMITTALS

A. Furnish submittals as specified in Sections 01330 - Submittal Procedures and 16050 - Common Work Results for Electrical.

B. LAN cable test form:
   1. LAN cable test reports:
      a. Submit 3 copies of test reports showing the results of all tests specified in this Section:
         1) Test type.
         2) Test location.
         3) Test date.
         4) Cable number.
         5) Cable length.
         6) Certification that the cable meets or exceeds the specified standard.
      b. Furnish hard copy and electronic copy for all traces.

C. Manufacturers’ testing procedures:
   1. Submit manufacturers’ recommended testing procedures and acceptable test results for review by the Engineer.

D. Test report:
    1. Include the following:
        a. Summary of Project.
        b. Description of equipment tested.
        c. Description of tests performed.
        d. Test results.
        e. Conclusions and recommendations.
        f. Completed test forms.
        g. List of test equipment used and calibration dates.
        h. LAN cable test reports.

E. Testing laboratory qualifications:
    1. Submit a complete resume and statement of qualifications from the proposed testing laboratory detailing their experiences in performing the tests specified:
        a. This statement will be used to determine whether the laboratory is acceptable, and shall include:
            1) Corporate history and references.
            2) Resume of individual performing test.
            3) Equipment list and test calibration data.

F. Division of responsibilities:
    1. Submit a list identifying who is responsible for performing each portion of the testing.

1.06 QUALITY ASSURANCE

A. As specified in Section 16050 - Common Work Results for Electrical.

B. Testing laboratory qualifications:
    1. The testing laboratory may be qualified testing personnel from the electrical subcontractor’s staff or an independent testing company.
    2. Selection of the testing laboratory and testing personnel is subject to approval by the Engineer based on testing experience and certifications of the individuals and testing capabilities of the organization.

1.07 DELIVERY, STORAGE, AND PROTECTION (NOT USED)

1.08 PROJECT OR SITE CONDITIONS

A. As specified in Section 16050 - Common Work Results for Electrical.

1.09 SEQUENCING

A. At least 30 days before commencement of the acceptance tests, submit the manufacturer’s complete field testing procedures to the Engineer and to the testing laboratory, complete with expected test results and tolerances for all equipment to be tested.

B. Perform testing in the following sequence:
  1. Perform routine tests as the equipment is installed including:
     a. Insulation-resistance tests.
     b. Continuity tests.
     c. Rotational tests.
  2. Adjusting and preliminary calibration.
  3. Acceptance tests.
  4. Demonstration.
  5. Commissioning and plant start-up.

1.10 SCHEDULING (NOT USED)

1.11 WARRANTY

A. As specified in Section 16050 - Common Work Results for Electrical.

1.12 SYSTEM START-UP (NOT USED)

1.13 OWNER'S INSTRUCTIONS (NOT USED)

1.14 MAINTENANCE (NOT USED)

PART 2 PRODUCTS

Not Used.

PART 3 EXECUTION

3.01 EXAMINATION (NOT USED)

3.02 PREPARATION

A. Test instrument calibration:
  1. Utilize a testing laboratory with a calibration program which maintains all applicable test instrumentation within rated accuracy.
  2. The accuracy shall be traceable to the NIST in an unbroken chain.
  3. Calibrate instruments in accordance with the following frequency schedule:
     a. Field instruments: 6 months maximum.
     b. Laboratory instruments: 12 months maximum.
     c. Leased specialty equipment where the accuracy is guaranteed by the lessor (such as Doble): 12 months maximum.
  4. Dated calibration labels shall be visible on all test equipment.
  5. Maintain an up-to-date instrument calibration record for each test instrument:
     a. The records shall show the date and results of each calibration or test.
  6. Maintain an up-to-date instrument calibration instruction and procedure for each test instrument.

B. Do not begin testing until the following conditions have been met:
  1. All instruments required are available and in proper operating condition.
  2. All required dispensable materials such as solvents, rags, and brushes are available.
  3. All equipment handling devices such as cranes, vehicles, chain falls and other lifting equipment are available or scheduled.
  4. All instruction books, calibration curves, or other printed material to cover the electrical devices are available.
  5. Data sheets to record all test results are available.

C. Engine generator tests:
  1. The following individuals must be present and remain at the site during the entire field testing of the engine generator:
    a. Manufacturer’s field engineer for the voltage regulator.
    b. Manufacturer’s field engineer for the governor and governor controller.
    c. Electrical contractor.

3.03 INSTALLATION (NOT USED)

3.04 ERECTION, INSTALLATION, APPLICATION, CONSTRUCTION (NOT USED)

3.05 REPAIR/RESTORATION (NOT USED)

3.06 RE-INSTALLATION (NOT USED)

3.07 COMMISSIONING

A. As specified in Section 01756 - Commissioning.

B. Testing and Training Phase: Installation Testing:
  1. Also called "Field Acceptance Testing".
  2. Panelboards:
    a. Cleaning:
      1) Visually inspect panelboard for evidence of discoloration, abnormal dust accumulation, metal shards, or any other indication of overheating, wear, or other abnormal conditions prior to cleaning.
      2) Clean cabinet with a brush, vacuum cleaner, or clean, dry, lint-free rags to remove any accumulation of dust, dirt, or other foreign matter. Do not use liquids, solvents or detergents when cleaning panelboards or components.
      3) Avoid blowing dust into panelboards. Do not use a blower or compressed air.
      4) Clean Supports, terminals, and other major insulating surfaces with clean, dry, lint-free rags or soft bristled brushes.
      5) Remove dust, soot, grease, moisture, and foreign material from surface of circuit breakers.
    b. General:
      1) Compare equipment nameplate data with the Contract Documents.
      2) Check panelboard circuit schedule for accuracy.
      3) Verify appropriate anchorage, required area clearances, and correct alignment.

4) Inspect overall general condition for physical damage. Check for broken studs and loose or damaged wires, connector, terminations, etc. Check all bolts, nuts, washer, and pins for tightness. Tighten or use manufacture's replacement parts as required.
5) Inspect cabinets for signs of rust, corrosion, or deteriorating paint. Inspect cabinets for evidence of localized heat damage to the paint. Investigate sources of heat. Repair painted surfaces.
6) Check that covers are in place and fastened. Plug any open unused knockouts.
7) Inspect panelboard for moisture. Seal off any cracks or openings which have allowed moisture to enter the cabinet. Inspect all component devices. Replace any components that show evidence of damage from moisture.
8) Look for any recent changes in sprinklers or other plumbing that might expose indoor panelboards to a source of liquids. Eliminate sources of water, moisture, or liquids, or provide adequate barriers to protect panelboards from sources of water, moisture, or liquids.
9) Inspect panelboards and internal components for evidence of overheating, arc spatter, sooty deposits, and tracking. Investigate and correct sources of arcing or overheating. Consult the panelboard manufacturer for recommendations.
10) Verify that fuse and/or circuit breaker sizes and types correspond to record drawings, if available, as well as to the circuit breaker's address for microprocessor communications packages, if equipped.
11) Set adjustable circuit breakers in accordance with engineering coordination study supplied by Contractor.

c. Terminations, Connections, and Lugs:
   1) Inspect bolted electrical connections for high resistance using one of the following methods:
      a) Use of low-resistance ohmmeter.
         (1) Compare bolted connection resistance values to values of similar connections:
            (a) Investigate values which deviate from those of similar bolted connections by more than 50 percent of the lowest value.
      b) Verify tightness of accessible bolted electrical connections by the calibrated torque wrench method:
         (1) Refer to manufacturer's instructions for proper foot-pound levels or NETA ATS tables.
   2) Inspect terminations, connection, and lugs for alignment, physical damage, burns, corrosion, discoloration, flaking, heat damage, arcing, pitting, melting, deterioration, carbonization, cracks, chips, breaks, partial discharge, or moisture. Investigate and eliminate sources of any damage.
   3) Follow manufacturer recommendations for cleaning, repairing, and replacing damaged parts.
   4) Replace overheated connections. Tighten connections to proper to proper torque levels as specified above.

d. Conductors and raceways:
   1) Inspect supply conductors and terminations for overheating, discoloration, and oxidation. Investigate and correct any deficiencies.
   2) Ensure the conductors are protected within their ampacities.

        3) Visually check panelboard, cables, and raceways for proper bonding and grounding. Correct improper bonding and grounding.
        4) Inspect conductors for discoloration, arcing, pitting, melting, flaking of insulation and/or metal parts. Repair or replace damaged components in accordance with manufacturer's recommendations.
        5) Inspect for frayed or broken wires. Replace or repair damaged components in accordance with manufacturer recommendations.
        6) Inspect for frayed or broken wires. Replace or repair conductors as necessary.
        7) Inspect conduits for moisture. Seal conduits which are a source of moisture and provide means to drain moisture away from the panelboard.
    e. Circuit breakers:
        1) Breakers rated less than 100 A:
            a) Operate circuit breakers several times in order to exercise the mechanisms and the contacts, and to ensure smooth operation. Do not oil or grease parts of molded case circuit breakers.
            b) Visually check circuit breakers for evidence of overheating and thermal damage. Investigate and eliminate sources of overheating.
            c) Check circuit breakers for visual defects, chipping, cracks, breaks, burns, and deterioration. Replace damaged circuit breakers.
            d) Verify correct operation of any auxiliary features such as trip and pickup indicators, zone interlocking, electrical close and trip operation, trip-free, and anti-pump function.
            e) Inspect interchangeable trip-unit circuit breakers for tightness of trip units.
            f) Check circuit breaker terminals and connections for tightness as specified above.
        2) Breakers rated 100 A and higher:
            a) Perform visual and mechanical inspection as specified in this Section.
            b) Perform electrical tests as specified in this Section.

C. Switchboard:
    1. Visual and mechanical inspection:
        a. Compare equipment nameplate data with the Contract Documents.
        b. Inspect physical and mechanical condition.
        c. Inspect anchorage, alignment, grounding and required area clearances.
        d. Inspect equipment for cleanliness.
        e. Verify that circuit breaker/fuse sizes and types correspond to the approved submittals and the coordination study as well as to the circuit breaker's address for microprocessor-communication packages.
        f. Verify that current and voltage transformer ratios correspond to that indicated on the Drawings.
        g. Verify that wiring connections are tight and that wiring is secure to prevent damage during routine operation of moving parts.

- h. Inspect bolted electrical connections for high resistance using one of the following methods:
  - 1) Use of low-resistance ohmmeter.
  - 2) Verify tightness of accessible bolted electrical connections by the calibrated torque wrench method:
    - a) Refer to manufacturer's instructions for proper foot-pound levels or NETA ATS tables.
- i. Mechanical and electrical interlocks:
  - 1) Attempt closure on locked-open devices.
  - 2) Attempt to open locked-closed devices.
  - 3) Make/attempt key-exchanges in all positions.
- j. Lubrication requirements:
  - 1) Verify appropriate lubrication on moving current-carrying parts.
  - 2) Verify appropriate lubrication on moving and sliding surfaces.
- k. Inspect insulators for evidence of physical damage or contaminated surfaces.
- l. Verify correct barrier and shutter installation and operation.
- m. Exercise all active components.
- n. Inspect all indicating devices for correct operation.
- o. Verify that filters are in place and/or vents are clear.
- p. Perform visual and mechanical inspection of instrument transformers as specified in this Section.
- q. Perform visual and mechanical inspection of surge arresters as specified in this Section.
- r. Inspect control power transformers:
  - 1) Inspect for physical damage, cracked insulation, broken leads, tightness of connections, defective wiring, and overall general condition.
  - 2) Verify that primary and secondary fuse/circuit breaker ratings match the submittal drawings.
  - 3) Verify correct functioning of drawout disconnecting and grounding contacts and interlocks.

2. Electrical tests:
   - a. Perform resistance measurements through bolted connections with a low-resistance ohmmeter.
   - b. Perform insulation-resistance tests on each bus section, phase-to-phase and phase-to-ground for 1 minute.
     - 1) Perform test in accordance with NETA ATS tables.
   - c. Perform a dielectric withstand voltage test on each bus section, each phase to ground with phases not under test grounded, in accordance with manufacturer's published data:
     - 1) Refer to NETA ATS tables in the absence of manufacturer's published data.
     - 2) The test voltage shall be applied for 1 minute.
   - d. Perform electrical tests on instrument transformers as specified in this Section.
   - e. Perform ground-resistance tests:
     - 1) Perform point-to-point tests to determine the resistance between the main grounding system and all major electrical equipment frames, system neutral and derived neutral points.
   - f. Determine the accuracy of all meters and calibrate watthour as specified in this Section. Verify multipliers.

- g. Control power transformers:
  - 1) Perform insulation-resistance tests. Perform measurements from winding-to-winding and each winding-to-ground:
    - a) Test voltages shall be in accordance with NETA ATS tables or as specified by the manufacturer.
    - b) Perform a turns-ratio test on all tap positions.
  - 2) Perform secondary wiring integrity test:
    - a) Disconnect transformer at secondary terminals and connect secondary wiring to a rated secondary voltage source:
      - (1) Verify correct potential at all devices.
  - 3) Verify correct secondary voltage by energizing primary winding with system voltage:
    - a) Measure secondary voltage with the secondary wiring disconnected.
- h. Voltage transformers:
  - 1) Perform secondary wiring integrity test:
    - a) Verify correct potential at all devices.
  - 2) Verify correct secondary voltage by energizing primary winding with system voltage.
- i. Perform current injection tests on the entire current circuit of each switchgear or switchboard:
  - 1) Perform current tests by secondary injection with magnitudes such that a minimum current of 1.0 ampere flows in the secondary circuit:
    - a) Verify the correct magnitude of current at each device in the circuit.
- j. Perform system function tests.
- k. Verify operation of space heaters.
- l. Perform electrical tests of surge arresters as specified in this Section.

3. Test values:
   - a. Compare bolted connection resistance values to values of similar connections:
     - 1) Investigate values which deviate from those of similar bolted connections by more than 50 percent of the lowest value.
   - b. Bolt-torque levels shall be in accordance with manufacturer's published data:
     - 1) Refer to NETA ATS tables in the absence of manufacturer's published data.
   - c. Insulation-resistance values of bus insulation shall be in accordance with manufacturer's published data:
     - 1) Refer to NETA ATS tables in the absence of manufacturer's published data.
     - 2) Investigate insulation values less than the allowable minimum.
     - 3) Do not proceed with dielectric withstand voltage tests until insulation-resistance values are above minimum values.
   - d. If no evidence of distress or insulation failure is observed by the end of the total time of voltage application during the dielectric withstand test, the test specimen is considered to have passed the test.
   - e. Instrument transformer test values as specified in this Section.
   - f. Investigate grounding system point-to-point resistance values that exceed 0.5 ohm.
   - g. Meter accuracy shall be in accordance with manufacturer's published data.

- h. Control power transformers:
  - 1) Insulation-resistance values of control power transformers shall be in accordance with manufacturer’s published data:
    - a) Refer to NETA ATS tables in the absence of manufacturer’s published data.
    - b) Investigate insulation values less than the allowable minimum.
  - 2) Turns-ratio test results shall not deviate by more than one-half percent from either the adjacent coils or the calculated ratio.
    - a) Do not proceed with dielectric withstand voltage tests until insulation-resistance values are above minimum values.
  - 3) Secondary wiring shall be as indicated on the Drawings and specified in the Specifications.
  - 4) Secondary voltage shall be as indicated on the Drawings.
- i. Voltage transformers:
  - 1) Secondary wiring shall be as indicated on the Drawings and specified in the Specifications.
  - 2) Secondary voltage shall be as indicated on the Drawings.
- j. Current-injection tests shall prove current wiring is as indicated on the Drawings and specified in the Specifications.
- k. Results of system function tests shall match the drawings and Specifications.
- l. Heaters shall be operational.
- m. Results of electrical tests on surge arresters shall be as specified in this Section.

D. Dry type transformers:
- 1. Visual and mechanical inspection:
  - a. Compare equipment nameplate data with the Contract Documents.
  - b. Inspect physical and mechanical condition.
  - c. Inspect anchorage, alignment, and grounding.
  - d. Verify that resilient mounts are free and that any shipping brackets have been removed.
  - e. Inspect equipment for cleanliness.
  - f. Inspect bolted electrical connections for high resistance using one of the following methods:
    - 1) Use of low-resistance ohmmeter.
    - 2) Verify tightness of accessible bolted electrical connections by the calibrated torque wrench method:
      - a) Refer to manufacturer’s instructions for proper foot-pound levels or NETA ATS tables.
  - g. Verify that as-left tap connections are as specified.
- 2. Electrical tests:
  - a. Perform resistance measurements through bolted connections with a low-resistance ohmmeter.
  - b. Perform insulation-resistance tests winding-to-winding and each winding-to-ground:
    - 1) Apply voltage in accordance with manufacturer’s published data.
      - a) Refer to NETA ATS tables in the absence of manufacturer’s published data.
  - c. Calculate dielectric absorption ration or polarization index.
  - d. Verify correct secondary voltage, phase-to-phase and phase-to-neutral after energization and before loading.

3. Test values:
    a. Compare bolted connection resistance values to values of similar connections:
        1) Investigate values which deviate from those of similar bolted connections by more than 50 percent of the lowest value.
    b. Bolt-torque levels shall be in accordance with manufacturer's published data:
        1) Refer to NETA ATS tables in the absence of manufacturer's published data.
    c. Tap connections are left as found unless otherwise specified.
    d. Minimum insulation-resistance values of transformer insulation shall be in accordance with manufacturer's published data:
        1) Refer to NETA ATS tables in the absence of manufacturer's published data.
        2) Investigate insulation values less than the allowable minimum.
    e. The dielectric absorption ratio or polarization index shall not be less than 1.0.
    f. Turns-ratio results should not deviate more than 1/2 percent from either the adjacent coils or calculated ratio.
    g. Phase-to-phase and phase-to-neutral secondary voltages shall be in agreement with nameplate data.

E. Low voltage cables, 600 volt maximum:
    1. Visual and mechanical inspection:
        a. Compare cable data with the Drawings and Specifications.
        b. Inspect exposed sections of cable for physical damage and correct connection as indicated on the Drawings.
        c. Inspect bolted electrical connections for high resistance by 1 of the following methods:
            1) Use of low-resistance ohmmeter.
            2) Verify tightness of accessible bolted electrical connections by the calibrated torque wrench method:
                a) Refer to manufacturer's instructions for proper foot-pound levels or NETA ATS tables.
        d. Inspect compression applied connectors for correct cable match and indentation.
        e. Inspect for correct identification and arrangement.
        f. Inspect cable jacket insulation and condition.
    2. Electrical tests:
        a. Perform resistance measurements through bolted connections with a low-resistance ohmmeter.
        b. Perform insulation resistance test on each conductor with respect to ground and adjacent conductors:
            1) Applied potential shall be 500 volts dc for 300-volt rated cable and 1,000 volts dc for 600-volt rated cable.
            2) Test duration shall be 1 minute.
        c. Perform continuity tests to insure correct cable connection.
        d. Verify uniform resistance of parallel conductors.

3. Test values:
    a. Compare bolted connection resistance values to values of similar connections:
        1) Investigate values which deviate from those of similar bolted connections by more than 50 percent of the lowest value.
    b. Insulation-resistance values shall be in accordance with manufacturer's published data:
        1) Refer to NETA ATS tables in the absence of manufacturer's published data.
        2) Investigate values of insulation-resistance less than the allowable minimum.
    c. Cable shall exhibit continuity.
    d. Investigate deviations in resistance between parallel conductors.

F. Low voltage molded case circuit breakers:
    1. Visual and mechanical inspection:
        a. Compare equipment nameplate data with the Contract Documents.
        b. Inspect physical and mechanical condition.
        c. Inspect anchorage and alignment.
        d. Verify that all maintenance devices are available for servicing and operating the breaker.
        e. Verify the unit is clean.
        f. Verify the arc chutes are intact.
        g. Inspect moving and stationary contacts for condition and alignment.
        h. Verify that primary and secondary contact wipe and other dimensions vital to satisfactory operation of the breaker are correct.
        i. Perform all mechanical operator and contact alignment tests on both the breaker and its operating mechanism in accordance with manufacturers published data.
        j. Operate circuit breaker to ensure smooth operation.
        k. Inspect bolted electrical connections for high resistance by one of the following methods:
            1) Use of low-resistance ohmmeter.
            2) Verify tightness of accessible bolted electrical connections by the calibrated torque wrench method:
                a) Refer to manufacturer's instructions for proper foot-pound levels or NETA ATS tables.
        l. Inspect operating mechanism, contacts, and arc chutes in unsealed units.
        m. Verify cell fit and element alignment.
        n. Verify racking mechanism operation.
        o. Verify appropriate lubrication on moving current-carrying parts and on moving and sliding surfaces.
        p. Perform adjustments for final protective device settings in accordance with the coordination study.
        q. Record as-found and as-left operation counter readings.
    2. Electrical tests:
        a. Perform resistance measurements through bolted connections with a low-resistance ohmmeter.

  - b. Perform insulation-resistance tests for 1 minute on each pole, phase-to-phase and phase-to-ground with the circuit breaker closed and across each open pole:
    - 1) Apply voltage in accordance with manufacturer's published data.
    - 2) Refer to NETA ATS tables in the absence of manufacturer's published data.
  - c. Perform a contact/pole-resistance test.
  - d. Determine long-time pickup and delay by primary current injection.
  - e. Determine short-time pickup and delay by primary current injection.
  - f. Determine ground-fault pickup and delay by primary current injection.
  - g. Determine instantaneous pickup value by primary current injection.
  - h. Perform minimum pickup voltage tests on shunt trip and close coils in accordance with manufacturer's published data.
  - i. Verify correct operation of any auxiliary features such as trip and pickup indicators, zone interlocking, electrical close and trip operation, trip-free, anti-pump function and trip unit battery condition:
    - 1) Reset all trip logs and indicators.
  - j. Verify operation of charging mechanism.
- 3. Test values:
  - a. Compare bolted connection resistance values to values of similar connections:
    - 1) Investigate values which deviate from those of similar bolted connections by more than 50 percent of the lowest value.
  - b. Bolt-torque levels shall be in accordance with manufacturer's published data:
    - 1) Refer to NETA ATS tables in the absence of manufacturer's published data.
  - c. Insulation-resistance values shall be in accordance with manufacturer's published data:
    - 1) Refer to NETA ATS tables in the absence of manufacturer's published data.
    - 2) Investigate values of insulation-resistance less than the allowable minimum.
  - d. Microhm or dc millivolt drop values shall not exceed the high levels of the normal range as indicated in the manufacturer's published data:
    - 1) If manufacturer's data is not available, investigate any values which deviate from adjacent poles or similar breakers by more than 50 percent of the lowest value.
  - e. Long-time pickup values shall be as specified, and the trip characteristic shall not exceed manufacturer's published time-current characteristic tolerance band including adjustment factors:
    - 1) If manufacturer's curves are not available, trip times shall not exceed the value shown in NETA ATS tables.
  - f. Short-time pickup values shall be as specified, and the trip characteristic shall not exceed manufacturer's published time-current tolerance band.
  - g. Ground fault pickup values shall be as specified, and the trip characteristic shall not exceed manufacturer's published time-current tolerance band.
  - h. Instantaneous pickup values shall be as specified and within manufacturer's published tolerances:
    - 1) Refer to NETA ATS tables in the absence of manufacturer's published data.

        - i. Pickup values and trip characteristics shall be within manufacturer's published tolerances.
        - j. Minimum pickup voltage of the shunt trip and close coils shall conform to the manufacturer's published data:
            - 1) Refer to NETA ATS tables in the absence of manufacturer's published data.
        - k. Breaker open, close, trip, trip-free, anti-pump, and auxiliary features shall function as designed.
        - l. The charging mechanism shall operate in accordance with manufacturer's published data.

- G. Instrument transformers:
    - 1. Visual and mechanical inspection:
        - a. Compare equipment nameplate data with the Contract Documents.
        - b. Inspect physical and mechanical condition.
        - c. Verify correct connection of transformers with system requirements.
        - d. Verify that adequate clearances exist between primary and secondary circuit wiring.
        - e. Verify the unit is clean.
        - f. Inspect bolted electrical connections for high resistance using one of the following methods:
            - 1) Use of low-resistance ohmmeter.
            - 2) Verify tightness of accessible bolted electrical connections by calibrated torque wrench method:
                - a) Refer to manufacturer's instructions for proper foot-pound levels or NETA ATS tables.
        - g. Verify that all required grounding and shorting connections provide contact.
        - h. Verify correct operation of transformer withdrawal mechanism and grounding operation.
        - i. Verify correct primary and secondary fuse sizes for voltage transformers.
        - j. Verify appropriate lubrication on moving current-carrying parts and on moving and sliding surfaces.
        - k. Verify instrument transformer polarities match the 3-line diagrams.
    - 2. Electrical tests - current transformers:
        - a. Perform resistance measurements through bolted connections with a low-resistance ohmmeter.
        - b. Perform insulation-resistance test of each current transformer and its secondary wiring with respect to ground at 1,000 VDC for 1 minute:
            - 1) For solid state devices that cannot tolerate the applied voltage, follow the manufacturer's recommendation.
        - c. Perform a polarity test of each current transformer in accordance with IEEE C57.13.1.
        - d. Perform a ratio verification test using the voltage or current method in accordance with IEEE C57.13.1.
        - e. Perform an excitation test on current transformers used for relaying applications in with accordance with IEEE C57.13.1.
        - f. Measure current circuit burdens at transformer terminals in accordance with IEEE C57.13.1.
        - g. Perform an excitation test on transformers used for relaying applications in accordance with IEEE C57.13.1.

        h. When applicable perform insulation-resistance tests on the primary winding with the secondary grounded:
            1) Test voltages shall be in accordance with NETA ATS tables.
        i. When applicable perform dielectric withstand tests on the primary winding with the secondary grounded:
            1) Test voltages shall be in accordance with NETA ATS tables.
        j. Perform power-factor or dissipation-factor tests in accordance with test equipment manufacturer’s published data.
        k. Verify that current transformer secondary circuits are grounded and have only 1 grounding point in accordance with IEEE C57.13.3:
            1) That grounding point should be located as specified by the Engineer in the Contract Documents.
    3. Electrical tests - voltage transformers:
        a. Perform resistance measurements through bolted connections with a low-resistance ohmmeter.
        b. Perform insulation-resistance tests winding-to-winding and winding-to-ground:
            1) Test voltage shall be applied for 1 minute in accordance with NETA ATS requirements.
            2) For solid state devices that cannot tolerate the applied voltage, follow the manufacturer’s recommendation.
        c. Perform a polarity test on each voltage transformer to verify the polarity marks on H_1- X_1 relationship as applicable.
        d. Perform a turns ratio test on all tap positions.
        e. Measure voltage circuit burdens at transformer terminals.
        f. Perform a dielectric withstand test on the primary windings with the secondary windings grounded:
            1) The dielectric voltage shall be in accordance with NETA ATS tables.
            2) Apply the test voltage for 1 minute.
        g. Perform power-factor or dissipation-factor tests in accordance with test equipment manufacturers published data.
        h. Verify that voltage transformer secondary circuits are grounded and have only 1 grounding point in accordance with IEEE C57.13.3:
            1) That grounding point should be located as specified by the Engineer in the Contract Documents.
    4. Test values:
        a. Compare bolted connection resistance values to values of similar connections:
            1) Investigate values which deviate from those of similar bolted connections by more than 50 percent of the lowest value.
        b. Bolt-torque levels shall be in accordance with manufacturer’s published data:
            1) Refer to NETA ATS tables in the absence of manufacturer’s published data.
        c. Insulation-resistance values of instrument transformers shall be in accordance with manufacturer’s published data:
            1) Refer to NETA ATS tables in the absence of manufacturer’s published data.
        d. Polarity results shall agree with transformer markings.
        e. Ratio errors shall be in accordance with IEEE C57.13.
        f. Excitation results for current transformers shall match the curve supplied by the manufacturer or be in accordance with IEEE C57.13.1.

        - g. Measured burdens shall be compared to instrument transformer ratings.
        - h. If no evidence of distress or insulation failure is observed by the end of the total time of voltage application during the dielectric withstand test, the current transformer primary winding is considered to have passed the test.
        - i. Power-factor or dissipation-factor values shall be compared to manufacturer’s published data:
            - 1) In the absence manufacturer’s published data the comparison shall be made to similar breakers.
        - j. Test results shall indicate that the circuits have only 1 grounding point.

- H. Metering devices:
    - 1. Visual and mechanical inspection:
        - a. Compare equipment nameplate data with the Contract Documents.
        - b. Inspect physical and mechanical condition.
        - c. Inspect bolted electrical connections for high resistance using one of the following methods:
            - 1) Use of low-resistance ohmmeter.
            - 2) Verify tightness of accessible bolted electrical connections by calibrated torque wrench method:
                - a) Refer to manufacturer’s instructions for proper foot-pound levels or NETA ATS tables.
        - d. Record model number, serial number, firmware revision, software revision, and rated control voltage.
        - e. Verify operation of display and indicating devices.
        - f. Record passwords.
        - g. Verify unit is grounded in accordance with manufacturer’s instructions.
        - h. Set all required parameters including instrument transformer ratios, system type, frequency, power demand methods/intervals, and communications requirements.
        - i. Inspect cover gasket, cover glass, condition of spiral spring, disk clearance, contacts, and case shorting contacts as applicable.
        - j. Verify the unit is clean.
    - 2. Electrical tests:
        - a. Apply voltage or current as appropriate to each analog input and verify correct measurement and indication.
        - b. Confirm correct operation and setting of each auxiliary input/output feature including mechanical relay, digital, and analog.
        - c. After initial system energization, confirm measurements and indications are consistent with loads present.
        - d. Perform resistance measurements through bolted connections with a low-resistance ohmmeter.
        - e. Verify accuracy of meter at all cardinal points.
        - f. Calibrate meters in accordance with manufacturer’s published data.
        - g. Verify that current transformer, and voltage transformer secondary circuits are intact.
    - 3. Test values:
        - a. Compare bolted connection resistance values to values of similar connections:
            - 1) Investigate values which deviate from those of similar bolted connections by more than 50 percent of the lowest value.

b. Bolt-torque levels shall be in accordance with manufacturer's published data:
    1) Refer to NETA ATS tables in the absence of manufacturer's published data.
c. Meter accuracy shall be in accordance with manufacturer's published data.
d. Calibration results shall be within manufacturer's published tolerances.
e. Instrument multipliers shall be in accordance with system design specifications.
f. Test results shall confirm the integrity of the secondary circuits of current and voltage transformers.

I. Grounding systems:
  1. Visual and mechanical inspection:
    a. Inspect ground system for compliance with that indicated on the Drawings, specified in Specifications, and in the NEC.
    b. Inspect physical and mechanical condition.
    c. Inspect bolted electrical connections for high resistance using one of the following methods:
      1) Use of low-resistance ohmmeter.
      2) Verify tightness of accessible bolted electrical connections by calibrated torque wrench method:
        a) Refer to manufacturer's instructions for proper foot-pound levels or NETA ATS tables.
    d. Inspect anchorage.
  2. Electrical tests:
    a. Perform resistance measurements through bolted connections with a low-resistance ohmmeter.
    b. Perform fall of potential test or alternative test in accordance with IEEE 81 on the main grounding electrode or system.
    c. Perform point-to-point tests to determine the resistance between the main grounding system and all major electrical equipment frames, the system neutral and any derived neutral points.
  3. Test values:
    a. Grounding system electrical and mechanical connections shall be free of corrosion.
    b. Compare bolted connection resistance values to values of similar connections:
      1) Investigate values which deviate from those of similar bolted connections by more than 50 percent of the lowest value.
    c. Bolt-torque levels shall be in accordance with manufacturer's published data:
      1) Refer to NETA ATS tables in the absence of manufacturer's published data.
    d. The resistance between the main grounding electrode and ground shall be as specified in Section 16060 - Grounding and Bonding. Investigate point-to-point resistance values that exceed 0.5 ohm.
  4. Rotating machinery, ac induction motors and generators:
    a. Visual and mechanical inspection:
      1) Compare equipment nameplate information with the Contract Documents.
      2) Inspect physical and mechanical condition.

        3) Inspect anchorage, alignment, and grounding.
        4) Inspect air baffles, filter media, cooling fans, slip rings, brushes, and brush rigging
        5) Inspect bolted electrical connections for high resistance using one or more of the following methods:
            a) Use of low-resistance ohmmeter.
            b) Verify tightness of accessible bolted electrical connections by calibrated torque wrench method:
                (1) Refer to manufacturer's instructions for proper foot-pound levels or NETA ATS tables.
        6) Verify correct application of appropriate lubrication and lubrication systems.
        7) Verify that resistance temperature detector (RTD) circuits conform to that indicated on the Drawings.
    b. Electrical tests - AC Induction:
        1) Perform resistance measurements through bolted connections with a low-resistance ohmmeter.
        2) Perform insulation-resistance test in accordance with IEEE 43:
            a) On motors 200 horsepower and smaller, test duration shall be 1 minute. Calculate dielectric absorption ratio for 60/30 second periods.
            b) On motors larger than 200 horsepower, test duration shall be 10 minutes. Calculate polarization index.
        3) On machines rated at 2,300 volts and greater, perform dielectric withstand voltage tests in accordance with:
            a) IEEE 95 for dc dielectric withstand voltage tests.
            b) NEMA MG1 for ac dielectric withstand voltage tests.
        4) Perform phase-to-phase stator resistance test on machines rated at 2,300 volts and greater.
        5) Perform insulation-resistance test on insulated bearings in accordance with manufacturer's published data.
        6) Test surge protection devices as specified in this Section.
        7) Test motor starter as specified in this Section.
        8) Perform resistance tests on resistance temperature detector (RTD) circuits.
        9) Verify operation of motor space heater, if applicable.
        10) Perform vibration test while machine is running under load.
    c. Test values:
        1) Inspection:
            a) Air baffles shall be clean and installed in accordance with the manufacturer's published data.
            b) Filter media shall be clean and installed in accordance with the manufacturer's published data.
            c) Cooling fans shall operate.
            d) Slip ring alignment shall be within manufacturer's published tolerances.
            e) Brush alignment shall be within manufacturer's published tolerances.
            f) Brush rigging shall be within manufacturer's published tolerances.

        2) Compare bolted connection resistance values to values of similar connections:
            a) Investigate values which deviate from those of similar bolted connections by more than 50 percent of the lowest value.
        3) Bolt-torque levels shall be in accordance with manufacturer's published data:
            a) Refer to NETA ATS tables in the absence of manufacturer's published data.
        4) Air-gap spacing and machine alignment shall be in accordance with manufacturer's published data.
        5) The recommended minimum insulation-resistance ($IR_{1 \text{ min}}$) test results in megohms shall be in accordance with NETA ATS tables.
            a) The polarization index value shall not be less than 2.0.
            b) The dielectric absorption ratio shall not be less than 1.4.
        6) If no evidence of distress or insulation failure is observed by the end of the total time of voltage application during the dielectric withstand test, the test specimen is considered to have passed the test.
        7) Investigate phase-to-phase stator resistance values that deviate by more than 5 percent.
        8) Power factor or dissipation factor values shall be compared to manufacturer's published data:
            a) In the absence of manufacturer's published data, compare values of similar machines.
        9) Tip-up values shall indicate no significant increase in power factor.
        10) If no evidence of distress, insulation failure, or waveform nesting is observed by the end of the total time of voltage application during the surge comparison test, the test specimen is considered to have passed the test.
        11) Bearing insulation-resistance measurements shall be within manufacturer's published tolerances:
            a) In the absence of manufacturer's published data, compare values of similar machines.
        12) Test results of surge protection devices shall be as specified in this Section.
        13) Test results of motor starter equipment shall be as specified in this Section.
        14) RTD circuits shall conform to the design intent and machine protection device manufacturer's published data.
        15) Heaters shall be operational.
        16) Vibration amplitudes of the uncoupled and unloaded machine shall be in accordance with manufacturer's published data:
            a) In the absence of manufacturer's published data, vibration amplitudes shall not exceed values in NETA ATS tables.
            b) If values exceed those in the NETA ATS tables, perform a complete vibration analysis.

J. Motor starters, low voltage:
    1. Visual and mechanical inspection:
        a. Compare equipment nameplate information with the Contract Documents.
        b. Inspect physical and mechanical condition.
        c. Inspect anchorage, alignment, and grounding.
        d. Verify the unit is clean.

    e. Inspect contactors:
        1) Verify mechanical operation.
        2) Verify contact gap, wipe, alignment, and pressure are in accordance with manufacturer’s published data.
    f. Motor-running protection:
        1) Verify overload element rating is correct for its application.
        2) If motor running protection is provided by fuses, verify correct fuse rating.
    g. Inspect bolted electrical connections for high resistance using one of the following methods:
        1) Use of low-resistance ohmmeter.
        2) Verify tightness of accessible bolted electrical connections by calibrated torque wrench method:
            a) Refer to manufacturer’s instructions for proper foot-pound levels or NETA ATS tables.
    h. Lubrication requirements:
        1) Verify appropriate lubrication on moving current-carrying parts.
        2) Verify appropriate lubrication on moving and sliding surfaces.

2. Electrical tests:
    a. Perform resistance measurements through bolted connections with a low-resistance ohmmeter.
    b. Perform insulation-resistance tests for 1 minute on each pole, phase-to-phase and phase to ground with the starter closed, and across each open pole for 1 minute:
        1) Test voltage shall be in accordance with manufacturer’s published data.
        2) Refer to NETA ATS tables in the absence of manufacturer’s published data.
    c. Test motor protection devices in accordance with manufacturer’s published data.
    d. Test circuit breakers as specified in this Section.
    e. Perform operational tests by initiating control devices.
3. Test values:
    a. Compare bolted connection resistance values to values of similar connections:
        1) Investigate values which deviate from those of similar bolted connections by more than 50 percent of the lowest value.
    b. Bolt-torque levels shall be in accordance with manufacturer’s published data:
        1) Refer to NETA ATS tables in the absence of manufacturer’s published data.
    c. Insulation-resistance values shall be in accordance with manufacturer’s published data:
        1) Refer to NETA ATS tables in the absence of manufacturer’s published data.
        2) Investigate values of insulation-resistance less than the allowable minimum.
    d. Motor protection parameters shall be in accordance with manufacturer’s published data.
    e. Circuit breaker test results shall as specified in this Section.
    f. Control devices shall perform in accordance with system design requirements.

K. Motor control centers, low voltage:
  1. Visual and mechanical inspection:
    a. Compare equipment nameplate data with the Contract Documents.
    b. Inspect physical and mechanical condition.
    c. Inspect anchorage, alignment, grounding and required clearances.
    d. Inspect equipment for cleanliness.
    e. Verify that circuit breaker/fuse sizes and types correspond to the approved submittals and coordination study.
    f. Verify that current and voltage transformer ratios correspond to that indicated on the Drawings.
    g. Inspect bolted electrical connections for high resistance using one of the following methods:
      1) Use of low-resistance ohmmeter.
      2) Verify tightness of accessible bolted electrical connections by the calibrated torque wrench method:
        a) Refer to manufacturer's instructions for proper foot-pound levels or NETA ATS tables.
    h. Mechanical and electrical interlocks:
      1) Attempt closure on locked-open devices.
      2) Attempt to open locked-closed devices.
      3) Make/attempt key-exchanges in all positions.
    i. Lubrication requirements:
      1) Verify appropriate lubrication on moving current-carrying parts.
      2) Verify appropriate lubrication on moving and sliding surfaces.
    j. Inspect insulators for evidence of physical damage or contaminated surfaces.
    k. Verify correct barrier and shutter installation and operation.
    l. Exercise all active components.
    m. Inspect all indicating devices for correct operation.
    n. Verify that filters are in place and/or vents are clear.
    o. Perform visual and mechanical inspection of instrument transformers as specified in this Section.
    p. Inspect control power transformers:
      1) Inspect for physical damage, cracked insulation, broken leads, tightness of connections, defective wiring, and overall general condition.
      2) Verify that primary and secondary fuse/circuit breaker ratings match the submittal drawings.
    q. Perform visual and mechanical inspection of circuit breakers as specified in this Section.
    r. Perform visual and mechanical inspection of starters as specified in this Section.
  2. Electrical tests:
    a. Perform resistance measurements through bolted connections with a low-resistance ohmmeter.
    b. Perform insulation-resistance tests on each bus section, phase-to-phase and phase-to-ground for 1 minute:
      1) Perform test in accordance with NETA ATS tables.
    c. Perform an dielectric withstand test on each bus section, each phase to ground with phases not under test grounded, in accordance with manufacturer's published data or NETA ATS tables. Apply the test voltage for 1 minute.

d. Perform electrical tests on instrument transformers as specified in this Section.
e. Perform ground-resistance tests:
    1) Perform point-to-point tests to determine the resistance between the main grounding system and all major electrical equipment frames, system neutral and derived neutral points.
f. Determine the accuracy of all meters.
g. Control power transformers:
    1) Perform insulation-resistance tests, winding-to-winding and winding-to-ground:
        a) Test voltages shall be in accordance with NETA ATS tables or as specified by the manufacturer.
    2) Perform secondary wiring integrity test:
        a) Disconnect transformer at secondary terminals and connect secondary wiring to a rated secondary voltage source:
            (1) Verify correct potential at all devices.
    3) Verify correct secondary voltage by energizing primary winding with system voltage:
        a) Measure secondary voltage with the secondary wiring disconnected.
h. Verify operation of space heaters.
i. Perform electrical tests of circuit breakers as specified in this Section.
j. Perform electrical tests of starters as specified in this Section.

3. Test values:
    a. Compare bolted connection resistance values to values of similar connections:
        1) Investigate values which deviate from those of similar bolted connections by more than 50 percent of the lowest value.
    b. Bolt-torque levels shall be in accordance with manufacturer's published data:
        1) Refer to NETA ATS tables in the absence of manufacturer's published data.
    c. Insulation-resistance values for bus and control power transformers shall be in accordance with manufacturer's published data:
        1) Refer to NETA ATS tables in the absence of manufacturer's published data.
        2) Investigate insulation values less than the allowable minimum.
        3) Do not proceed with dielectric withstand voltage tests until insulation-resistance values are above minimum values.
    d. Bus insulation shall withstand the over potential test voltage applied.
    e. Instrument transformer test values shall be as specified in this Section.
    f. Investigate grounding system point-to-point resistance values that exceed 0.5 ohm.
    g. Meter accuracy shall be in accordance with manufacturer's published data.
    h. Control power transformers:
        1) Insulation-resistance values of control power transformers shall be in accordance with manufacturer's published data:
            a) Refer to NETA ATS tables in the absence of manufacturer's published data.
            b) Investigate insulation values less than the allowable minimum.

            - c) Do not proceed with dielectric withstand voltage tests until insulation-resistance values are above minimum values.
        - 2) Secondary wiring shall be as indicated on the Drawings and specified in the Specifications.
        - 3) Secondary voltage shall be as indicated on the Drawings.
    - i. Heaters shall be operational.
    - j. Test values for circuit breakers shall be as specified in this Section.
    - k. Test values for starters shall be as specified in this Section.

L. Variable frequency drive systems:

- 1. Visual and mechanical inspection:
    - a. Compare equipment nameplate data with the Contract Documents.
    - b. Inspect physical and mechanical condition.
    - c. Inspect anchorage, alignment, and grounding.
    - d. Verify the unit is clean.
    - e. Ensure vent path openings are free from debris and that heat transfer surfaces are clean.
    - f. Verify correct connections of circuit boards, wiring, disconnects, and ribbon cables.
    - g. Motor running protection:
        - 1) Verify drive overcurrent setpoints are correct for their application.
        - 2) If drive is used to operate multiple motors, verify individual overload element ratings are correct for their application.
        - 3) Apply minimum and maximum speed setpoints. Verify setpoints are within limitations of the load coupled to the motor.
    - h. Inspect bolted electrical connections for high resistance using one of the following methods:
        - 1) Use of low-resistance ohmmeter.
        - 2) Verify tightness of accessible bolted electrical connections by the calibrated torque wrench method:
            - a) Refer to manufacturer’s instructions for proper foot-pound levels or NETA ATS tables.
    - i. Verify correct fuse sizing in accordance with manufacturer’s published data.
    - j. Perform visual and mechanical inspection of input circuit breaker as specified in this Section.
- 2. Electrical tests:
    - a. Perform resistance measurements through bolted connections with low resistance ohmmeter.
    - b. Test the motor overload relay elements by injecting primary current through the overload circuit and monitoring trip time of the overload element.
    - c. Test for the following parameters in accordance with relay calibration procedures specified in this Section or as recommended by the manufacturer:
        - 1) Input phase loss protection.
        - 2) Input overvoltage protection.
        - 3) Output phase rotation.
        - 4) Overtemperature protection.
        - 5) Direct current overvoltage protection.
        - 6) Overfrequency protection.
        - 7) Drive overload protection.

            8) Fault alarm outputs.
        d. Perform continuity tests on bonding conductors as specified in this Section.
        e. Perform start-up of drive in accordance with manufacturer's published data. Calibrate drive to the system's minimum and maximum speed control signals.
        f. Perform operational tests by initiating control devices:
            1) Slowly vary drive speed between minimum and maximum. Observe motor and load for unusual noise or vibration.
            2) Verify operation of drive from remote start/stop and speed control signals.
        g. Perform electrical tests of input circuit breaker as specified in this Section.
    3. Test values:
        a. Compare bolted connection resistance values to values of similar connections:
            1) Investigate values which deviate from those of similar bolted connections by more than 50 percent of the lowest value.
        b. Bolt-torque levels shall be in accordance with manufacturer's published data:
            1) Refer to NETA ATS tables in the absence of manufacturer's published data.
        c. Overload test trip times at 300 percent of overload element rating shall be in accordance with manufacturer's published time-current curve.
        d. Test values for input circuit breaker shall be as specified in this Section.
        e. Relay calibration results shall be as specified in this Section.
        f. Continuity of bonding conductors shall be as specified in this Section.
        g. Control devices shall perform in accordance with system requirements.
        h. Operational tests shall conform to system design requirements.

M. Surge arresters, low voltage:
    1. Visual and mechanical inspection:
        a. Compare equipment nameplate data with the Contract Documents.
        b. Inspect physical and mechanical condition.
        c. Inspect anchorage, alignment, grounding, and clearances.
        d. Verify the arresters are clean.
        e. Inspect bolted electrical connections for high resistance using one of the following methods:
            1) Use of low-resistance ohmmeter.
            2) Verify tightness of accessible bolted electrical connections by the calibrated torque wrench method:
                a) Refer to manufacturer's instructions for proper foot-pound levels or NETA ATS tables.
        f. Verify that the ground lead on each device is individually attached to a ground bus or ground electrode.
        g. Verify that stroke counter is correctly mounted and electrically connected, if applicable.
        h. Record stroke counter reading.
    2. Electrical tests:
        a. Perform resistance measurements through bolted connections with a low-resistance ohmmeter.

b. Perform an insulation-resistance test on each arrester, phase terminal- to- ground:
    1) Apply voltage in accordance with manufacturers published data.
    2) Refer to NETA ATS tables in the absence of manufacturer's published data.

c. Test grounding connection as specified in this Section.

3. Test values:
    a. Compare bolted connection resistance values to values of similar connections:
        1) Investigate values which deviate from those of similar bolted connections by more than 50 percent of the lowest value.
    b. Bolt-torque levels shall be in accordance with manufacturer's published data:
        1) Refer to NETA ATS tables in the absence of manufacturer's published data.
    c. Insulation-resistance values shall be in accordance with manufacturer's published data:
        1) Refer to NETA ATS tables in the absence of manufacturer's published data.
        2) Investigate insulation values less than the allowable minimum.
    d. Resistance between the arrester ground terminal and the ground system shall be less than 0.5 ohm.

N. Single Engine generator:
    1. Visual and mechanical inspection:
        a. Compare equipment nameplate data with the Contract Documents.
        b. Inspect physical and mechanical condition.
        c. Inspect anchorage, alignment, and grounding.
        d. Verify the unit is clean.
    2. Electrical and mechanical tests:
        a. Perform insulation-resistance tests in accordance with IEEE 43:
            1) Machines larger than 150 kilowatts: Test duration shall be 10 minutes. Calculate polarization index.
            2) Machines 150 kilowatts and less: Test duration shall be 1 minute. Calculate the dielectric-absorption rate.
        b. Test protective relay devices as specified in this Section.
        c. Verify phase rotation, phasing, and synchronized operation as required by the application.
        d. Functionally test engine shutdown for low oil pressure, overtemperature, overspeed, and other protection features as applicable.
        e. Perform vibration test for each main bearing cap.
        f. Conduct performance test in accordance with NFPA 110.
        g. Verify correct functioning of governor and regulator.
        h. Load bank testing:
            1) Provide a resistive load bank to test the operation of the engine generator.
            2) Load bank shall be capable of loading the engine generator to its full nameplate kilowatt rating at unity power factor.
            3) Load steps shall simulate the plant load steps used in sizing the engine generator.
                a) Record voltage and frequency response at each step with a data logging instrument that has an 8-millisecond response time.

4) Test run at full nameplate kilowatt rating for a minimum of 4 hours:
  a) Record at 10-minute intervals:
    (1) Voltage.
    (2) Frequency.
    (3) Current.
    (4) Power factor.
    (5) Engine oil pressure.
    (6) Engine oil temperature.
    (7) Air inlet temperature.
    (8) Radiator discharge temperature.
    (9) Engine coolant temperature.
    (10) Vibration levels at each main bearing cap.

3. Test values:
  a. Anchorage, alignment, and grounding should be in accordance with manufacturer’s published data and system design.
  b. The dielectric absorption ratio or polarization index shall be compared to previously obtained results and should not be less than 1.0. The recommended minimum insulation ($IR_{1\ min}$) test results in megohms shall be corrected to 40 degrees Celsius and read as follows:
    1) $IR_{1\ min}$ equals kilovolt + 1 for most windings made before 1970, all field windings, and others not described below.
      a) Kilovolt is the rated machine terminal-to-terminal voltage in rms kilovolt.
    2) $IR_{1\ min}$ equals 100 megohms for most dc armature and ac windings built after 1970 (form-wound coils).
    3) $IR_{1\ min}$ equals 5 megohms for most machines and random-wound stator coils and form-wound coils rated below 1 kilovolt.
      a) Dielectric withstand voltage and surge comparison tests shall not be performed on machines having lower values than those indicated above.
  c. The polarization index value shall not be less than 2.0.
  d. The dielectric absorption ratio shall not be less than 1.4.
  e. Protective relay device test results shall be as specified in this Section.
  f. Phase rotation, phasing, and synchronizing shall be in accordance with system design requirements.
  g. Low oil pressure, over temperature, over speed, and other protection features shall operate in accordance with manufacturer’s published data and system design requirements.
  h. Vibration levels shall be in accordance with manufacturer’s published data and shall be compared to baseline data.
  i. Performance tests shall conform to manufacturer’s published data and NFPA 110.
  j. Governor and voltage regulator shall operate in accordance with manufacturer’s published data and system design requirements:
    1) Steady state voltage regulation shall be within 0.5 percent of set point.
    2) The output voltage of the generator shall not fall below 10 percent of the power system nominal rating for more than 5 seconds.
    3) The output voltage of the generators shall not exceed the power system nominal rating at any time.
    4) Steady state frequency regulation shall be within 59.5 hertz to 60.5 hertz.

        5) Frequency variations shall not exceed 2 hertz from 60 hertz for more than 2 seconds.

O. Uninterruptible power systems:
  1. All testing and settings shall be conducted by the UPS manufacturer’s field engineer:
    a. Test the complete operation of the static transfer system.
    b. Test the complete operation of the static bypass system.
    c. Test the complete operation of the maintenance bypass system.
  2. Visual and mechanical inspection:
    a. Compare equipment nameplate data with the Contract Documents.
    b. Inspect physical and mechanical condition.
    c. Inspect anchorage, alignment, grounding, and required clearances.
    d. Verify that fuse sizes and types correspond to that indicated on the Drawings.
    e. Verify the unit is clean.
    f. Test all electrical and mechanical interlock systems for correct operation and sequencing.
    g. Inspect bolted electrical connections for high resistance using one of the following methods:
      1) Use of low-resistance ohmmeter.
      2) Verify tightness of accessible bolted electrical connections by calibrated torque wrench method:
        a) Refer to manufacturer’s instructions for proper foot-pound levels or NETA ATS tables.
    h. Verify operation of forced ventilation.
    i. Verify that filters are in place and/or vents are clear.
  3. Electrical tests:
    a. Perform resistance measurements through bolted connections with a low-resistance ohmmeter.
    b. Test static transfer from inverter to bypass and back. Use normal load, if possible.
    c. Set free running frequency of oscillator.
    d. Test dc undervoltage trip level on inverter input breaker. Set according to manufacturer’s published data.
    e. Test alarm circuits.
    f. Verify synchronizing indicators for static switch and bypass switches.
    g. Perform electrical tests for UPS system breakers as specified in this Section.
    h. Perform electrical tests for UPS system automatic transfer switches as specified in this Section.
    i. Perform electrical tests for UPS system batteries as specified in this Section.
    j. Perform electrical tests for UPS rotating machinery as specified in this Section.
  4. Test values:
    a. Electrical and mechanical interlock systems shall operate in accordance with system design requirements.
    b. Compare bolted connection resistance values to values of similar connections:
      1) Investigate values which deviate from those of similar bolted connections by more than 50 percent of the lowest value.

        c. Bolt-torque levels shall be in accordance with manufacturer's published data:
            1) Refer to NETA ATS tables in the absence of manufacturer's published data.
        d. Static transfer shall function in accordance with manufacturer's published data.
        e. Oscillator free running frequency shall be within manufacturer's published tolerances.
        f. Direct current undervoltage shall trip inverter input breaker.
        g. Alarm circuits shall operate in accordance with design requirements.
        h. Synchronizing indicators shall operate in accordance with design requirements.
        i. Breaker performance shall be as specified in this Section.
        j. Automatic transfer switch performance shall be as specified in this Section.
        k. Battery test results shall be as specified in this Section.
        l. Rotating machinery performance shall be as specified in this Section.

P. Automatic transfer switches:
    1. Visual and mechanical inspection:
        a. Compare equipment nameplate data with the Contract Documents.
        b. Inspect physical and mechanical condition.
        c. Inspect anchorage, alignment, grounding, and required clearances.
        d. Verify the unit is clean.
        e. Lubrication requirements:
            1) Verify appropriate lubrication on moving current-carrying parts.
            2) Verify appropriate lubrication on moving and sliding surfaces.
        f. Verify that manual transfer warnings are attached and visible.
        g. Verify tightness of all control connections.
        h. Inspect bolted electrical connections for high resistance using one of the following methods:
            1) Use of low-resistance ohmmeter.
            2) Verify tightness of accessible bolted electrical connections by calibrated torque wrench:
                a) Refer to manufacturer's instructions for proper foot-pound levels or NETA ATS tables.
        i. Perform manual transfer operation.
        j. Verify positive mechanical interlocking between normal and alternate sources.
    2. Electrical tests:
        a. Perform resistance measurements through bolted connections with a low-resistance ohmmeter.
        b. Perform a contact/pole-resistance test.
        c. Verify settings and operation of control devices.
        d. Calibrate and set all relays and timers as specified in this Section.
        e. Verify phase rotation, phasing, and synchronized operation as required by the application.
        f. Perform automatic transfer tests:
            1) Simulate loss of normal power.
            2) Return to normal power.
            3) Simulate loss of emergency power.
            4) Simulate all forms of single-phase conditions.

g. Verify correct operation and timing of the following functions:
    1) Normal source voltage-sensing relays.
    2) Engine start sequence.
    3) Time delay upon transfer.
    4) Alternate source voltage-sensing relays.
    5) Automatic transfer operation.
    6) Interlocks and limit switch function.
    7) Time delay and retransfer upon normal power restoration.
    8) Engine cool down and shutdown feature.

3. Test values:
    a. Compare bolted connection resistance values to values of similar connections:
        1) Investigate values which deviate from those of similar bolted connections by more than 50 percent of the lowest value.
    b. Bolt-torque levels shall be in accordance with manufacturer's published data:
        1) Refer to NETA ATS tables in the absence of manufacturer's published data.
    c. Microhm or dc millivolt drop values shall not exceed the high levels of the normal range as indicated in the manufacturer's published data:
        1) If manufacturer's published data is not available, investigate values that deviate from adjacent poles or similar switches by more than 50 percent of the lowest value.
    d. Control devices shall operate in accordance with manufacturer's published data.
    e. Relay test results shall be as specified in this Section.
    f. Phase rotation, phasing, and synchronization shall be as specified in the system design specifications.
    g. Automatic transfers shall operate in accordance with manufacturer's design.
    h. Operation and timing shall be in accordance with manufacturer's and system design requirements.

Q. LAN cable testing:
1. Visual and mechanical inspections:
    a. Compare cable type and connections with that indicated on the Drawings and specified in the Specifications.
    b. Inspect cable and connectors for physical and mechanical damage.
    c. Verify that all connectors are correctly installed.
2. Pre-testing:
    a. Test individual cables before installation:
        1) Before physical placement of the cable, test each cable while on the spool with a LAN certification test device.
        2) Before the cable is installed, verify that the cable conforms to the manufacturer's attenuation specification and that no damage has been done to the cable during shipping or handling.
        3) The test shall be fully documented and the results submitted to the Engineer, including a hard copy of all traces, before placement of the cable.
        4) The Engineer shall be notified if a cable fails to meet specification and the cable shall not be installed unless otherwise directed by the Engineer.

3. Electrical tests:
    a. Perform cable end-to-end testing on all installed cables after installation of connectors from both ends of the cable.
    b. Test shall include cable system performance tests and confirm the absence of wiring errors.
4. Test results:
    a. Cables shall meet or exceed TIA standards for the type category 5E or 6 cable installation.
5. Test equipment:
    a. LAN certification equipment used for the testing shall be capable of testing Category 6 cable installation to TIA proposed Level III accuracy. Tests performed shall include:
        1) Near end cross talk.
        2) Attenuation.
        3) Equal level far end cross talk.
        4) Return loss.
        5) Ambient noise.
        6) Effective cable length.
        7) Propagation delay.
        8) Continuity/loop resistance.
    b. LAN certification test equipment shall be able to store and produce plots of the test results.
    c. Manufacturers: The following or equal:
        1) Agilent Technologies, WireScope 350.
        2) Fluke.

R. Emergency systems, automatic transfer switches:
1. Visual and mechanical inspection:
    a. Compare equipment nameplate data with the Contract Documents.
    b. Inspect physical and mechanical condition.
    c. Inspect anchorage, alignment, grounding, and required clearances.
    d. Verify the unit is clean.
    e. Verify appropriate lubrication on moving current-carrying parts and on moving and sliding surfaces.
    f. Verify that manual transfer warnings are attached and visible.
    g. Verify tightness of all control connections.
    h. Inspect bolted electrical connections for high resistance using one of the following methods:
        1) Use of low-resistance ohmmeter.
        2) Verify tightness of accessible bolted electrical connections by calibrated torque wrench method:
            a) Refer to manufacturer’s instruction for proper foot-pound levels or NETA ATS tables.
    i. Perform manual transfer operation.
    j. Verify positive mechanical interlocking between normal and alternate sources.
2. Electrical tests:
    a. Perform resistance measurements through bolted connections with a low-resistance ohmmeter.

b. Perform insulation-resistance tests on all control wiring with respect to ground. Applied potential shall be 500 volts dc for 300-volt rated cable and 1,000 volts dc for 600-volt rated cable. Test duration shall be 1 minute. For units with solid-state components of for control devices that cannot tolerate the applied voltage, follow manufacturer's recommendation.
c. Perform a contact/pole-resistance test.
d. Verify settings and operation of control devices.
e. Calibrate and set all relays and timers as specified in this Section.
f. Verify phase rotation, phasing, and synchronized operation as required by the application.
g. Perform automatic transfer tests:
    1) Simulate loss of normal power.
    2) Return to normal power.
    3) Simulate loss of emergency power.
    4) Simulate all forms of single-phase conditions.
h. Verify correct operation and timing of the following functions:
    1) Normal source voltage-sensing and frequency-sensing relays.
    2) Engine start sequence.
    3) Time delay upon transfer.
    4) Alternate source voltage-sensing and frequency-sensing relays.
    5) Automatic transfer operation.
    6) Interlocks and limit switch function.
    7) Time delay and retransfer upon normal power restoration.
    8) Engine cool down and shutdown feature.

3. Test values:
    a. Compare bolted connection resistance values to values of similar connections:
        1) Investigate values which deviate from those of similar bolted connections by more than 50 percent of the lowest value.
    b. Bolt-torque levels shall be in accordance with manufacturer's published data:
        1) Refer to NETA ATS tables in the absence of manufacturer's published data.
4. Test values - electrical:
    a. Compare bolted connection resistance values to values of similar connections:
        1) Investigate values which deviate from those of similar bolted connections by more than 50 percent of the lowest value.
    b. Insulation-resistance values of control wiring shall not be less than 2 megohms.
    c. Microhm or dc millivolt drop values shall not exceed the high levels of the normal range as indicated in the manufacturer's published data:
        1) If manufacturer's published data is not available, investigate values that deviate from adjacent poles or similar switches by more than 50 percent of the lowest value.
    d. Control devices shall operate in accordance with manufacturer's published data.
    e. Relay test results shall be as specified in this Section.
    f. Phase rotation, phasing, and synchronization shall be in accordance with system design specifications.
    g. Automatic transfers shall operate in accordance with manufacturer's design.

h. Operation and timing shall be in accordance with manufacturer's and system design requirements.

3.08 FIELD QUALITY CONTROL (NOT USED)

3.09 ADJUSTING (NOT USED)

3.10 CLEANING

A. As specified in Section 16050 - Common Work Results for Electrical.

B. After the acceptance tests have been completed, dispose of all testing expendables, vacuum all cabinets, and sweep clean all surrounding areas.

3.11 PROTECTION

A. As specified in Section 16050 - Common Work Results for Electrical.

3.12 SCHEDULES (NOT USED)

END OF SECTION

THIS PAGE INTENTIONALLY LEFT BLANK

SECTION 16990

CONDUIT SCHEDULE

PART 1 GENERAL

1.01 SUMMARY

A. Specific definitions:
   1. Conduits:
      a. ARM: Armored cable.
      b. GRC: Galvanized rigid conduit.
      c. PCS: PVC jacketed rigid steel conduit.
      d. IMC: Intermediate metallic conduit.
      e. EMT: Electrical metallic steel tubing.
      f. PVC: Polyvinyl chloride rigid plastic conduit.
      g. SLT: Sealtight - liquidtight flexible conduit.
      h. RAC: Rigid aluminum conduit.
      i. FLX: Flexible metallic conduit.
      j. NFC: Non-metallic flexible conduit.
   2. Cables:
      a. DN Thick: DeviceNet “thick” cable.
      b. DN Thin: DeviceNet “thin” cable.
      c. PBPA: Profibus PA cable.
      d. PBDP: Profibus DP cable.
      e. PBDPP: Profibus DP cable with 24VDC power.
      f. FFBUS: Foundation Fieldbus cable.
      g. RS-485 RS-485 cable.
      h. CAT5e: Category 5 enhanced Ethernet cable.
      i. CAT6: Category 6 Ethernet cable.
      j. CNET: ControlNet cable.
      k. DH+: Data Highway Plus cable.
      l. RIO: Remote I/O cable.
      m. DF1: Serial cable.
      n. MODB: Modbus cable.
      o. MODB+: Modbus Plus cable.
      p. */FO: Fiber optic cable (* indicates number of fibers).
      q. 2/C#16S: 2 conductor, 16 gauge, twisted shielded pair. (*/2/C#16S * indicates number of pairs).
      r. 3/C#16S: 3 conductor, 16 gauge, twisted shielded triplet. (*/3/C#16S * indicates number of triplets).
      s. */C#Y: Multiconductor cable (* indicates number of conductors, Y indicates conductor size and insulation).
      t. MFR: Manufacturer or vendor furnished cable.

PART 2 PRODUCTS

Not Used.

PART 3 EXECUTION

3.01 CONDUIT SCHEDULE

A. Conduit Schedules are presented on the following pages.

SECTION 16990A

CONDUIT SCHEDULE
AREA 10, 40

PART 1 GENERAL

1.01 SUMMARY

A. Conduit requirements:
   1. As defined in Section 16050 and Section 16130.

B. Cable requirements and definitions:
   1. As defined in Section 16050 and Section 16123.
   2. 2/CS#16: 2 conductor, 16 gauge, twisted shielded pair.
   3. PULL: Pull Rope.

PART 2 PRODUCTS

Not Used.

PART 3 EXECUTION

3.01 CONDUIT SCHEDULE

A. Conduit Schedule is presented on the following pages.

CONDUIT SCHEDULE AREA 10, 40

GIBSON OAKS WATER PRODUCTION FACILITY

RAW WATER WELL PUMP

ENGINEER SKB
REVISION 0
DATE 7/20/20

CONDUIT			CONDUCTORS			GROUND				
NUMBER	DWG	SIZE	#	SIZE	TYPE	#	SIZE	TYPE	DESCRIPTION	CONNECTING SEGMENTS
C-10-102	10E02	0.75"	2	#12	XHHW-2	1	#12	XHHW-2	FR: SV-10-1 TO: J-BOX 2 #12 >> SV-10-1 CONTROL	
C-10-110	10E02	0.75"	2 2	#12 #14	XHHW-2 XHHW-2	1	#12	XHHW-2	FR: DISCONNECT TO: J-BOX 2 #12 >> MWH-10-1 POWER 2 #14 >> TSH-10-1 CONTROL	
C-10-111	10E02	1"	10	#14	XHHW-2	1	#14	XHHW-2	FR: LCP-10-1 TO: J-BOX 6 #14 >> LCP-10-1 CONTROL 4 #14 >> LCP-10-1 CONTROL (SPARE)	
C-10-112	10E02	2"	4 12	#12 #14	XHHW-2 XHHW-2	1	#12	XHHW-2	FR: J-BOX TO: EHH-1 2 #12 >> SV-10-1 CONTROL 2 #12 >> MWH-10-1 POWER 2 #14 >> TSH-10-1 CONTROL 6 #14 >> LCP-10-1 CONTROL 4 #14 >> LCP-10-1 CONTROL (SPARE)	C-10-115
C-10-113	10E02	2"	4	#14	XHHW-2	1	#14	XHHW-2	FR: PSH-10-1/PSL-10-1 TO: EHH-1 2 #14 >> PSH-10-1 CONTROL 2 #14 >> PSL-10-1 CONTROL	C-40-115
C-10-115	02E01 90E02	2"	4 12	#12 #14	XHHW-2 XHHW-2	1	#12	XHHW-2	FR: EHH-1 TO: MCC-1 2 #12 >> SV-10-1 CONTROL 2 #12 >> MWH-10-1 POWER 2 #14 >> TSH-10-1 CONTROL 6 #14 >> LCP-10-1 CONTROL 4 #14 >> LCP-10-1 CONTROL (SPARE)	C-10-112 C-10-112 C-10-112 C-10-112 C-10-112
L-10-101	10E02	0.75"	2	#10	XHHW-2	1	#10	XHHW-2	FR: FIT-10-1 TO: CONDUIT TEE 2 #10 >> FIT-10-1 POWER	
L-10-131	10E02	0.75"	2	#12	XHHW-2	1	#12	XHHW-2	FR: POLE LIGHT TO: SWITCH 2 #12 >> POLE LIGHT POWER	
L-10-132	10E02	0.75"	2	#12	XHHW-2	1	#12	XHHW-2	FR: SWITCH TO: RECEPTACLE 2 #12 >> POLE LIGHT POWER	
L-10-133	10E02	0.75"	2	#12	XHHW-2	1	#12	XHHW-2	FR: RECEPTACLE TO: J-BOX 2 #12 >> POLE LIGHT & RECEPTACLE POWER	
L-10-134	10E02	0.75"	2	#8	XHHW-2	1	#8	XHHW-2	FR: J-BOX TO: CONDUIT TEE 2 #8 >> POLE LIGHT & RECEPTACLE POWER	
L-10-135	10E02	2"	2 2	#8 #10	XHHW-2 XHHW-2	1	#8	XHHW-2	FR: CONDUIT TEE TO: EHH-1 2 #10 >> FIT-10-1 POWER 2 #8 >> POLE LIGHT & RECEPTACLE POWER	L-40-105
P-10-100	10E02	1"	3 2 2	#10 #12 #14	XHHW-2 XHHW-2 XHHW-2	1	#10	XHHW-2	FR: PMP-10-1 TO: DISCONNECT 3 #10 >> PMP-10-1 POWER 2 #12 >> MWH-10-1 POWER 2 #14 >> TSH-10-1 CONTROL	
P-10-110	10E02	2"	3	#10	XHHW-2	1	#10	XHHW-2	FR: DISCONNECT TO: EHH-1 3 #10 >> PMP-10-1 POWER	P-10-115
P-10-115	02E01 90E02	2"	3	#10	XHHW-2	1	#10	XHHW-2	FR: EHH-1 TO: MCC-1 3 #10 >> PMP-10-1 POWER	P-10-110
S-10-101	10E02	0.75"	1	2/CS-#16		1	#14	XHHW-2	FR: FIT-10-1 TO: CONDUIT TEE 1 2/CS-#16 >> FIT-10-1 SIGNAL	
S-10-102	10E02	0.75"	1	2/CS-#16		1	#14	XHHW-2	FR: LT-10-1 TO: CONDUIT TEE 1 2/CS-#16 >> LT-10-1 SIGNAL	

CONDUIT SCHEDULE AREA 10, 40

GIBSON OAKS WATER PRODUCTION FACILITY

RAW WATER WELL PUMP

ENGINEER	SKB
REVISION	0
DATE	7/20/20

CONDUIT			CONDUCTORS			GROUND				
NUMBER	DWG	SIZE	#	SIZE	TYPE	#	SIZE	TYPE	DESCRIPTION	CONNECTING SEGMENTS
S-10-103	10E02	2"	2	2/CS-#16		1	#14	XHHW-2	FR: CONDUIT TEE	S-40-105
									TO: EHH-1	
									1 2/CS-#16 >> FIT-10-1 SIGNAL	
									1 2/CS-#16 >> LT-10-1 SIGNAL	
C-40-101	40E01	2"	2	#14	XHHW-2	1	#14	XHHW-2	FR: ZSO-40-1	C-40-115
									TO: EHH-1	
									2 #14 >> ZSO-40-1 CONTROL	
C-40-105	40E02	2"	2	#14	XHHW-2	1	#14	XHHW-2	FR: FSH-42-1	C-40-115
									TO: EHH-1	
									2 #14 >> FSH-42-1 CONTROL	
C-40-115	02E01	2"	8	#14	XHHW-2	1	#14	XHHW-2	FR: EHH-1	
	90E02								TO: PCM-1-1	
									2 #14 >> FSH-42-1 CONTROL	C-40-105
									2 #14 >> ZSO-40-1 CONTROL	C-40-101
									2 #14 >> PSH-10-1 CONTROL	C-10-113
									2 #14 >> PSL-10-1 CONTROL	C-10-113
L-40-010	40E01	0.75"	2	#12	XHHW-2	1	#12	XHHW-2	FR: SWITCH	
									TO: J-BOX	
									2 #12 >> SWITCH POWER	
L-40-011	40E01	0.75"	2	#12	XHHW-2	1	#12	XHHW-2	FR: RECEPTACLE	
									TO: J-BOX	
									2 #12 >> RECEPTACLE POWER	
L-40-050	40E01	0.75"	2	#12	XHHW-2	1	#12	XHHW-2	FR: POLE LIGHT	
									TO: POLE LIGHT	
									2 #12 >> POLE LIGHT POWER	
L-40-051	40E01	0.75"	2	#12	XHHW-2	1	#12	XHHW-2	FR: POLE LIGHT	
									TO: POLE LIGHT	
									2 #12 >> POLE LIGHT POWER	
L-40-052	40E01	0.75"	2	#12	XHHW-2	1	#12	XHHW-2	FR: POLE LIGHT	
									TO: SWITCH	
									2 #12 >> POLE LIGHT POWER	
L-40-100	40E02	2"	4	#10	XHHW-2	1	#10	XHHW-2	FR: J-BOX	L-40-105
									TO: EHH-1	
									2 #10 >> FIT-40-1 POWER	L-40-112
									2 #10 >> POLE LIGHT POWER	L-40-110
L-40-102	40E01	2"	4	#10	XHHW-2	1	#10	XHHW-2	FR: J-BOX	L-40-105
									TO: EHH-1	
									2 #10 >> RECEPTACLE POWER	
									2 #10 >> POLE LIGHT POWER	
L-40-105	02E01	2"	2	#8	XHHW-2	1	#8	XHHW-2	FR: EHH-1	
	90E02		8	#10	XHHW-2				TO: J-BOX	
									2 #10 >> RECEPTACLE POWER	L-40-102
									2 #10 >> POLE LIGHT POWER	L-40-102
									2 #10 >> FIT-40-1 POWER	L-40-100
									2 #10 >> FIT-10-1 POWER	L-10-135
									2 #8 >> POLE LIGHT & RECEPTACLE POWER	L-10-135
L-40-110	40E02	2"	2	#10	XHHW-2	1	#10	XHHW-2	FR: POLE LIGHT	L-40-100
									TO: J-BOX	
									2 #10 >> POLE LIGHT POWER	
L-40-112	40E02	0.75"	2	#10	XHHW-2	1	#10	XHHW-2	FR: FIT-40-1	L-40-100
									TO: J-BOX	
									2 #10 >> FIT-40-1 POWER	
S-40-010	40E01	0.75"	1	2/CS-#16		1	#14	XHHW-2	FR: LIT-42-1	S-40-101
									TO: CONDUIT TEE	
									1 2/CS-#16 >> LIT-42-1 SIGNAL	
S-40-011	40E01	0.75"	1	2/CS-#16		1	#14	XHHW-2	FR: LIT-42-2	S-40-101
									TO: CONDUIT TEE	
									1 2/CS-#16 >> LIT-42-2 SIGNAL	
S-40-100	40E02	1"	1	2/CS-#16		1	#14	XHHW-2	FR: FIT-40-1	S-40-105
									TO: EHH-1	
									1 2/CS-#16 >> FIT-40-1 SIGNAL	
S-40-101	40E01	2"	2	2/CS-#16		1	#14	XHHW-2	FR: CONDUIT TEE	S-40-105
									TO: EHH-1	
									1 2/CS-#16 >> LIT-42-1 SIGNAL	S-40-010
									1 2/CS-#16 >> LIT-42-2 SIGNAL	S-40-011

CONDUIT SCHEDULE AREA 10, 40

GIBSON OAKS WATER PRODUCTION FACILITY

RAW WATER WELL PUMP

ENGINEER	**SKB**
REVISION	**0**
DATE	7/20/20

CONDUIT			**CONDUCTORS**			**GROUND**				
NUMBER	**DWG**	**SIZE**	**#**	**SIZE**	**TYPE**	**#**	**SIZE**	**TYPE**	**DESCRIPTION**	**CONNECTING SEGMENTS**
S-40-105	02E01 90E02	2"	5	2/CS-#16		1	#14	XHHW-2	FR: EHH-1	
									TO: PCM-1-1	
									1 2/CS-#16 >> LIT-42-1 SIGNAL	S-40-101
									1 2/CS-#16 >> LIT-42-2 SIGNAL	S-40-101
									1 2/CS-#16 >> FIT-40-1 SIGNAL	S-40-100
									1 2/CS-#16 >> FIT-10-1 SIGNAL	S-10-103
									1 2/CS-#16 >> LT-10-1 SIGNAL	S-10-103
X-40-101	40E01	2"	1	PULL	ROPE				FR: STUB-UP AT GSR	
									TO: EHH-1	
									1 PULL >> SPARE	
X-40-102	40E01	2"	1	PULL	ROPE				FR: STUB-UP AT GSR	
									TO: EHH-1	
									1 PULL >> SPARE	
X-40-105	02E01 90E02	2"	1	PULL	ROPE				FR: EHH-1	
									TO: MCC-1	
									1 PULL >> SPARE	
X-40-106	02E01 90E02	2"	1	PULL	ROPE				FR: EHH-1	
									TO: J-BOX	
									1 PULL >> SPARE	
X-40-107	02E01 90E02	2"	1	PULL	ROPE				FR: EHH-1	
									TO: PCM-1-1	
									1 PULL >> SPARE	

END OF CONDUIT SCHEDULE

END OF SECTION

SECTION 16990B

CONDUIT SCHEDULE
AREA 11

PART 1 GENERAL

1.01 SUMMARY

A. Conduit requirements:
   1. As defined in Section 16050 and Section 16130.

B. Cable requirements and definitions:
   1. As defined in Section 16050 and Section 16123.
   2. 2/CS#16: 2 conductor, 16 gauge, twisted shielded pair.
   3. CAT6: Category 6 Ethernet cable.
   4. PULL: Pull Rope.
   5. RS-485 RS-485 cable.

PART 2 PRODUCTS

Not Used.

PART 3 EXECUTION

3.01 CONDUIT SCHEDULE

A. Conduit Schedule is presented on the following pages.

CONDUIT SCHEDULE AREA 11

SHERWOOD LAKES WATER PRODUCTION FACILITY

WELL SITE

ENGINEER	KTW
REVISION	0
DATE	7/10/20

CONDUIT			CONDUCTORS			GROUND				
NUMBER	DWG	SIZE	#	SIZE	TYPE	#	SIZE	TYPE	DESCRIPTION	CONNECTING SEGMENTS
C-10-302	11E02	0.75"	2	#12	XHHW-2	1	#12	XHHW-2	FR: SV-10-3	C-10-312
									TO: J-BOX	
									2 #12 >> SV-10-3 CONTROL	
C-10-310	11E02	0.75"	2	#12	XHHW-2	1	#12	XHHW-2	FR: DISCONNECT	C-10-312
			2	#14	XHHW-2				TO: J-BOX	
									2 #14 >> TSH-10-3 CONTROL	
									2 #12 >> MWH-10-3 POWER	
C-10-311	11E02	1"	10	#14	XHHW-2	1	#14	XHHW-2	FR: LCP-10-3	C-10-312
									TO: J-BOX	
									6 #14 >> LCP-10-3 CONTROL	
									4 #14 >> LCP-10-3 CONTROL (SPARE)	
C-10-312	11E02	2"	4	#12	XHHW-2	1	#12	XHHW-2	FR: J-BOX	C-91-151
			12	#14	XHHW-2				TO: PB-91-2	
									2 #12 >> SV-10-3 CONTROL	C-10-302
									2 #14 >> TSH-10-3 CONTROL	C-10-310
									2 #12 >> MWH-10-3 POWER	C-10-310
									6 #14 >> LCP-10-3 CONTROL	C-10-311
									4 #14 >> LCP-10-3 CONTROL (SPARE)	C-10-311
C-10-313	11E02	2"	4	#14	XHHW-2	1	#14	XHHW-2	FR: PSH-10-3/PSL-10-3	C-91-153
									TO: PB-91-2	
									2 #14 >> PSH-10-3 CONTROL	
									2 #14 >> PSL-10-3 CONTROL	
C-10-402	11E02	0.75"	2	#12	XHHW-2	1	#12	XHHW-2	FR: SV-10-4	C-10-412
									TO: J-BOX	
									2 #12 >> SV-10-4 CONTROL	
C-10-410	11E02	0.75"	2	#12	XHHW-2	1	#12	XHHW-2	FR: DISCONNECT	C-10-412
			2	#14	XHHW-2				TO: J-BOX	
									2 #14 >> TSH-10-4 CONTROL	
									2 #12 >> MWH-10-4 POWER	
C-10-411	11E02	1"	10	#14	XHHW-2	1	#14	XHHW-2	FR: LCP-10-4	C-10-412
									TO: J-BOX	
									6 #14 >> LCP-10-4 CONTROL	
									4 #14 >> LCP-10-4 CONTROL (SPARE)	
C-10-412	11E02	2"	4	#12	XHHW-2	1	#12	XHHW-2	FR: J-BOX	C-91-152
			12	#14	XHHW-2				TO: PB-91-2	
									2 #12 >> SV-10-4 CONTROL	C-10-402
									2 #14 >> TSH-10-4 CONTROL	C-10-410
									2 #12 >> MWH-10-4 POWER	C-10-410
									6 #14 >> LCP-10-4 CONTROL	C-10-411
									4 #14 >> LCP-10-4 CONTROL (SPARE)	C-10-411
C-10-413	11E02	2"	4	#14	XHHW-2	1	#14	XHHW-2	FR: PSH-10-4/PSL-10-4	C-91-153
									TO: PB-91-2	
									2 #14 >> PSH-10-4 CONTROL	
									2 #14 >> PSL-10-4 CONTROL	
L-10-301	11E02	2"	2	#12	XHHW-2	1	#12	XHHW-2	FR: FIT-10-3	L-91-151
									TO: PB-91-1	
									2 #12 >> FIT-10-3 POWER	
L-10-331	11E02	1"	2	#12	XHHW-2	1	#12	XHHW-2	FR: POLE LIGHT	L-10-332
									TO: SWITCH	
									2 #12 >> POLE LIGHT POWER	
L-10-332	11E02	0.75"	2	#12	XHHW-2	1	#12	XHHW-2	FR: SWITCH	
									TO: RECEPTACLE	
									2 #12 >> POLE LIGHT POWER	L-10-331
L-10-333	11E02	0.75"	2	#12	XHHW-2	1	#12	XHHW-2	FR: RECEPTACLE	
									TO: J-BOX	
									2 #12 >> POLE LIGHT & RECEPTACLE POWER	
L-10-334	11E02	2"	2	#8	XHHW-2	1	#8	XHHW-2	FR: J-BOX	L-91-152
									TO: PB-91-1	
									2 #8 >> POLE LIGHT & RECEPTACLE POWER	
L-10-401	11E02	2"	2	#12	XHHW-2	1	#12	XHHW-2	FR: FIT-10-4	L-91-151
									TO: PB-91-1	
									2 #12 >> FIT-10-4 POWER	
L-10-431	11E02	1"	2	#12	XHHW-2	1	#12	XHHW-2	FR: POLE LIGHT	L-10-432
									TO: SWITCH	
									2 #12 >> POLE LIGHT POWER	
L-10-432	11E02	0.75"	2	#12	XHHW-2	1	#12	XHHW-2	FR: SWITCH	
									TO: RECEPTACLE	
									2 #12 >> POLE LIGHT POWER	L-10-431

CONDUIT SCHEDULE AREA 11

SHERWOOD LAKES WATER PRODUCTION FACILITY

WELL SITE

ENGINEER KTW
REVISION 0
DATE 7/10/20

CONDUIT			CONDUCTORS			GROUND				
NUMBER	DWG	SIZE	#	SIZE	TYPE	#	SIZE	TYPE	DESCRIPTION	CONNECTING SEGMENTS
L-10-433	11E02	0.75"	2	#12	XHHW-2	1	#12	XHHW-2	FR: RECEPTACLE TO: J-BOX 2 #12 >> POLE LIGHT & RECEPTACLE POWER	
L-10-434	11E02	2"	2	#8	XHHW-2	1	#8	XHHW-2	FR: J-BOX TO: PB-91-1 2 #8 >> POLE LIGHT & RECEPTACLE POWER	L-91-152
P-10-300	11E02	2.5"	3 2 2	#4/0 #12 #14	XHHW-2 XHHW-2 XHHW-2	1	#2	XHHW-2	FR: PMP-10-3 TO: DISCONNECT 3 #4/0 >> PMP-10-3 POWER 2 #12 >> MWH-10-3 POWER 2 #14 >> TSH-10-3 CONTROL	P-10-310
P-10-310	11E02	3"	3	#4/0	XHHW-2	1	#2	XHHW-2	FR: DISCONNECT TO: PB-91-1 3 #4/0 >> PMP-10-3 POWER	P-10-315 P-10-300
P-10-315	91E01	2.5"	3	#4/0	XHHW-2	1	#2	XHHW-2	FR: PB-91-1 TO: RVSS-10-3 3 #4/0 >> PMP-10-3 POWER	P-10-310
P-10-400	11E02	2.5"	3 2 2	#4/0 #12 #14	XHHW-2 XHHW-2 XHHW-2	1	#3	XHHW-2	FR: PMP-10-4 TO: DISCONNECT 3 #4/0 >> PMP-10-4 POWER 2 #12 >> MWH-10-4 POWER 2 #14 >> TSH-10-4 CONTROL	P-10-410
P-10-410	11E02	3"	3	#4/0	XHHW-2	1	#3	XHHW-2	FR: DISCONNECT TO: PB-91-1 3 #4/0 >> PMP-10-4 POWER	P-10-415 P-10-400
P-10-415	91E01	2.5"	3	#4/0	XHHW-2	1	#2	XHHW-2	FR: PB-91-1 TO: RVSS-10-4 3 #4/0 >> PMP-10-4 POWER	P-10-410
S-10-301	11E02	0.75"	1	2/CS-#16		1	#14	XHHW-2	FR: FIT-10-3 TO: CONDUIT TEE 1 2/CS-#16 >> FIT-10-3 SIGNAL	S-10-303
S-10-302	11E02	0.75"	1	2/CS-#16		1	#14	XHHW-2	FR: LT-10-3 TO: CONDUIT TEE 1 2/CS-#16 >> LT-10-3 SIGNAL	S-10-303
S-10-303	11E02	2"	2	2/CS-#16		1	#14	XHHW-2	FR: CONDUIT TEE TO: PB-91-3 1 2/CS-#16 >> FIT-10-3 SIGNAL 1 2/CS-#16 >> LT-10-3 SIGNAL	S-91-050 S-10-301 S-10-302
S-10-401	11E02	0.75"	1	2/CS-#16		1	#14	XHHW-2	FR: FIT-10-4 TO: CONDUIT TEE 1 2/CS-#16 >> FIT-10-4 SIGNAL	S-10-403
S-10-402	11E02	0.75"	1	2/CS-#16		1	#14	XHHW-2	FR: LT-10-4 TO: CONDUIT TEE 1 2/CS-#16 >> LT-10-4 SIGNAL	S-10-403
S-10-403	11E02	2"	2	2/CS-#16		1	#14	XHHW-2	FR: CONDUIT TEE TO: PB-91-3 1 2/CS-#16 >> FIT-10-4 SIGNAL 1 2/CS-#16 >> LT-10-4 SIGNAL	S-91-050 S-10-401 S-10-402
X-10-301	11E02	2"	1	PULL	ROPE				FR: STUB-UP NEAR SL-1 TO: PB-91-1 1 PULL >> SPARE	
X-10-302	11E02	2"	1	PULL	ROPE				FR: STUB-UP NEAR SL-1 TO: PB-91-2 1 PULL >> SPARE	
X-10-401	11E02	2"	1	PULL	ROPE				FR: STUB-UP NEAR SL-2 TO: PB-91-1 1 PULL >> SPARE	
X-10-402	11E02	2"	1	PULL	ROPE				FR: STUB-UP NEAR SL-2 TO: PB-91-2 1 PULL >> SPARE	
C-11-101	02E01	2"	20	#14	XHHW-2	1	#14	XHHW-2	FR: GEN-91-1 TO: PB-91-2 20 #14 >> GEN-91-1 CONTROL	C-91-153

CONDUIT SCHEDULE AREA 11

SHERWOOD LAKES WATER PRODUCTION FACILITY

WELL SITE

ENGINEER	**KTW**
REVISION	**0**
DATE	7/10/20

CONDUIT			CONDUCTORS			GROUND				
NUMBER	**DWG**	**SIZE**	**#**	**SIZE**	**TYPE**	**#**	**SIZE**	**TYPE**	**DESCRIPTION**	**CONNECTING SEGMENTS**
L-11-101	02E01	2"	3	#8	XHHW-2	1	#10	XHHW-2	FR: GEN-91-1 TO: PB-91-1 3 #8 >> GEN-91-1 POWER	L-91-153
N-11-101	02E01	2"	1		RS-485	1	#14	XHHW-2	FR: GEN-91-1 TO: PB-91-3 1 RS-485 >> GEN-91-1 NETWORK	S-91-050
P-11-101	02E01	2"	3	#3/0	XHHW-2	1	#3	XHHW-2	FR: GEN-91-1 TO: PB-91-1 3 #3/0 >> GEN-91-1 POWER	P-91-105
P-11-102	02E01	2"	3	#3/0	XHHW-2	1	#3	XHHW-2	FR: GEN-91-1 TO: PB-91-1 3 #3/0 >> GEN-91-1 POWER	P-91-106
S-11-101	02E01	2"	2	2/CS-#16		1	#14	XHHW-2	FR: GEN-91-1 TO: PB-91-3 2 2/CS-#16 >> GEN-91-1 SIGNAL	S-91-050
X-11-001	02E01	2"	1	PULL	ROPE				FR: GEN-91-1 TO: PB-91-1 1 PULL >> SPARE	
X-11-002	02E01	2"	1	PULL	ROPE				FR: GEN-91-1 TO: PB-91-2 1 PULL >> SPARE	
C-91-080	91E01	1"	16	#14	XHHW-2	1	#14	XHHW-2	FR: VCP-83-1 TO: CONDUIT TEE 16 #14 >> VCP-83-1 CONTROL	C-91-083
C-91-081	91E01	0.75"	2	#14	XHHW-2	1	#14	XHHW-2	FR: FSH-81-1 TO: CONDUIT TEE 2 #14 >> FSH-81-1 CONTROL	C-91-083
C-91-083	91E01	1.5"	18	#14	XHHW-2	1	#14	XHHW-2	FR: CONDUIT TEE TO: PCM-3-1 2 #14 >> FSH-81-1 CONTROL 16 #14 >> VCP-83-1 CONTROL	 C-91-081 C-91-080
C-91-101	91E01	1"	10	#14	XHHW-2	1	#14	XHHW-2	FR: RVSS-10-3 TO: CONDUIT TEE 10 #14 >> RVSS-10-3 CONTROL	C-91-103
C-91-102	91E01	1"	10	#14	XHHW-2	1	#14	XHHW-2	FR: RVSS-10-4 TO: CONDUIT TEE 10 #14 >> RVSS-10-4 CONTROL	C-91-103
C-91-103	91E01	1.5"	20	#14	XHHW-2	1	#14	XHHW-2	FR: CONDUIT TEE TO: PCM-3-1 10 #14 >> RVSS-10-4 CONTROL 10 #14 >> RVSS-10-3 CONTROL	 C-91-102 C-91-101
C-91-151	91E01	1.5"	4 12	#12 #14	XHHW-2 XHHW-2	1	#12	XHHW-2	FR: PB-91-2 TO: RVSS-10-3 2 #12 >> SV-10-3 CONTROL 2 #14 >> TSH-10-3 CONTROL 2 #12 >> MWH-10-3 POWER 6 #14 >> LCP-10-3 CONTROL 4 #14 >> LCP-10-3 CONTROL (SPARE)	 C-10-312 C-10-312 C-10-312 C-10-312 C-10-312
C-91-152	91E01	1.5"	4 12	#12 #14	XHHW-2 XHHW-2	1	#12	XHHW-2	FR: PB-91-2 TO: RVSS-10-4 2 #12 >> SV-10-4 CONTROL 2 #14 >> TSH-10-4 CONTROL 2 #12 >> MWH-10-4 POWER 6 #14 >> LCP-10-4 CONTROL 4 #14 >> LCP-10-4 CONTROL (SPARE)	 C-10-412 C-10-412 C-10-412 C-10-412 C-10-412
C-91-153	91E01	1.5"	28	#14	XHHW-2	1	#14	XHHW-2	FR: PB-91-2 TO: PCM-3-1 20 #14 >> GEN-91-1 CONTROL 2 #14 >> PSH-10-4 CONTROL 2 #14 >> PSL-10-4 CONTROL 2 #14 >> PSH-10-3 CONTROL 2 #14 >> PSL-10-3 CONTROL	 C-11-101 C-10-413 C-10-413 C-10-313 C-10-313
L-91-050	91E01	1.5"	4	#3	XHHW-2	1	#8	XHHW-2	FR: LP-91 TO: XFMR-91 4 #3 >> LP-91 POWER	

CONDUIT SCHEDULE AREA 11

SHERWOOD LAKES WATER PRODUCTION FACILITY

WELL SITE

ENGINEER	**KTW**
REVISION	**0**
DATE	7/10/20

CONDUIT			CONDUCTORS			GROUND				
NUMBER	**DWG**	**SIZE**	**#**	**SIZE**	**TYPE**	**#**	**SIZE**	**TYPE**	**DESCRIPTION**	**CONNECTING SEGMENTS**
L-91-060	91E01	0.75"	4	#12	XHHW-2	1	#12	XHHW-2	FR: PCM-3-1	
									TO: LP-91	
									2 #12 >> PCM-3-1 UPS POWER	
									2 #12 >> PCM-3-1 AUX POWER	
L-91-080	91E01	0.75"	2	#12	XHHW-2	1	#12	XHHW-2	FR: VCP-83-1	
									TO: LP-91	
									2 #12 >> VCP-83-1 POWER	
L-91-100	91E01	0.75"	2	#10	XHHW-2	1	#10	XHHW-2	FR: ODU-2	
									TO: LP-91	
									2 #10 >> ODU-2 POWER	
L-91-102	91E01	0.75"	2	#12	XHHW-2	1	#12	XHHW-2	FR: IDU-3	L-91-104
									TO: CONDUIT TEE	
									2 #12 >> IDU-3 POWER	
L-91-103	91E01	0.75"	2	#12	XHHW-2	1	#12	XHHW-2	FR: IDU-4	L-91-104
									TO: CONDUIT TEE	
									2 #12 >> IDU-4 POWER	
L-91-104	91E01	0.75"	4	#12	XHHW-2	1	#12	XHHW-2	FR: CONDUIT TEE	
									TO: LP-91	
									2 #12 >> IDU-4 POWER	L-91-103
									2 #12 >> IDU-3 POWER	L-91-102
L-91-151	91E01	0.75"	4	#12	XHHW-2	1	#12	XHHW-2	FR: PB-91-1	
									TO: LP-91	
									2 #12 >> FIT-10-4 POWER	L-10-401
									2 #12 >> FIT-10-3 POWER	L-10-301
L-91-152	91E01	1"	4	#8	XHHW-2	1	#8	XHHW-2	FR: PB-91-1	
									TO: LP-91	
									2 #8 >> POLE LIGHT & RECEPTACLE POWER	L-10-434
									2 #8 >> POLE LIGHT & RECEPTACLE POWER	L-10-334
L-91-153	91E01	1"	3	#8	XHHW-2	1	#10	XHHW-2	FR: PB-91-1	
									TO: LP-91	
									3 #8 >> GEN-91-1 AUX POWER	L-11-101
N-91-051	91E01	0.75"	1		CAT6	1	#14	XHHW-2	FR: RADIO ANTENNA	N-91-053
									TO: CONDUIT TEE	
									1 CAT6 >> RADIO ANTENNA NETWORK	
N-91-052	91E01	0.75"	1		CAT6	1	#14	XHHW-2	FR: FCV-3-1	N-91-053
									TO: CONDUIT TEE	
									1 CAT6 >> FCV-3-1 NETWORK	
N-91-053	91E01	1"	2		CAT6	1	#14	XHHW-2	FR: CONDUIT TEE	N-91-056
									TO: CONDUIT TEE	
									1 CAT6 >> FCV-3-1 NETWORK	N-91-052
									1 CAT6 >> RADIO ANTENNA NETWORK	N-91-051
N-91-055	91E01	0.75"	1		CAT6	1	#14	XHHW-2	FR: ATS-91-1	N-91-056
									TO: CONDUIT TEE	
									1 CAT6 >> ATS-91-1 NETWORK	
N-91-056	91E01	1.5"	3		CAT6	1	#14	XHHW-2	FR: CONDUIT TEE	N-91-060
									TO: CONDUIT TEE	
									1 CAT6 >> ATS-91-1 NETWORK	N-91-055
									1 CAT6 >> FCV-3-1 NETWORK	N-91-053
									1 CAT6 >> RADIO ANTENNA NETWORK	N-91-053
N-91-057	91E01	0.75"	1		CAT6	1	#14	XHHW-2	FR: PNL-91	N-91-060
									TO: CONDUIT TEE	
									1 CAT6 >> PNL-91 NETWORK	
N-91-060	91E01	1.5"	4		CAT6	1	#14	XHHW-2	FR: CONDUIT TEE	
									TO: PCM-3-1	
									1 CAT6 >> PNL-91 NETWORK	N-91-057
									1 CAT6 >> ATS-91-1 NETWORK	N-91-056
									1 CAT6 >> FCV-3-1 NETWORK	N-91-056
									1 CAT6 >> RADIO ANTENNA NETWORK	N-91-056
N-91-062	91E01	0.75"	1		CAT6	1	#14	XHHW-2	FR: PTZ-3-1	
									TO: PCM-3-1	
									1 CAT6 >> PTZ-3-1 NETWORK	
N-91-065	91E01	0.75"	1		CAT6	1	#14	XHHW-2	FR: RADIO ANTENNA	
									TO: PCM-3-1	
									1 CAT6 >> RADIO ANTENNA NETWORK	

CONDUIT SCHEDULE AREA 11

SHERWOOD LAKES WATER PRODUCTION FACILITY

WELL SITE

ENGINEER	**KTW**
REVISION	**0**
DATE	7/10/20

CONDUIT			**CONDUCTORS**			**GROUND**				
NUMBER	**DWG**	**SIZE**	**#**	**SIZE**	**TYPE**	**#**	**SIZE**	**TYPE**	**DESCRIPTION**	**CONNECTING SEGMENTS**
P-91-001	91E01	2.5"	4	#3/0	XHHW-2	1	#3	XHHW-2	FR: UTILITY METER TO: CB-91 3 #3/0 >> UTILITY POWER 1 #3/0 >> NEUTRAL	
P-91-002	91E01	2.5"	4	#3/0	XHHW-2	1	#3	XHHW-2	FR: UTILITY METER TO: CB-91 3 #3/0 >> UTILITY POWER 1 #3/0 >> NEUTRAL	
P-91-005	91E01	2"	3	#3/0	XHHW-2	1	#3	XHHW-2	FR: ATS-91-1 TO: CB-91 3 #3/0 >> ATS-91-1 POWER	
P-91-006	91E01	2"	3	#3/0	XHHW-2	1	#3	XHHW-2	FR: ATS-91-1 TO: CB-91 3 #3/0 >> ATS-91-1 POWER	
P-91-011	91E01	2"	3	#3/0	XHHW-2	1	#3	XHHW-2	FR: PNL-91 TO: ATS-91-1 3 #3/0 >> PNL-91 POWER	
P-91-012	91E01	2"	3	#3/0	XHHW-2	1	#3	XHHW-2	FR: PNL-91 TO: ATS-91-1 3 #3/0 >> PNL-91 POWER	
P-91-050	91E01	1.5"	3	#3	XHHW-2	1	#8	XHHW-2	FR: XFMR-91 TO: PNL-91 3 #3 >> XFMR-91 POWER	
P-91-061	91E01	2"	3	#3/0	XHHW-2	1	#3	XHHW-2	FR: RVSS-10-3 TO: PNL-91 3 #3/0 >> RVSS-10-3 POWER	
P-91-062	91E01	2"	3	#3/0	XHHW-2	1	#3	XHHW-2	FR: RVSS-10-3 TO: PNL-91 3 #3/0 >> RVSS-10-3 POWER	
P-91-071	91E01	2"	3	#3/0	XHHW-2	1	#3	XHHW-2	FR: RVSS-10-4 TO: PNL-91 3 #3/0 >> RVSS-10-4 POWER	
P-91-072	91E01	2"	3	#3/0	XHHW-2	1	#3	XHHW-2	FR: RVSS-10-4 TO: PNL-91 3 #3/0 >> RVSS-10-4 POWER	
P-91-105	91E01	2"	3	#3/0	XHHW-2	1	#3	XHHW-2	FR: PB-91-1 TO: ATS-91-1 3 #3/0 >> GEN-91-1 POWER	P-11-101
P-91-106	91E01	2"	3	#3/0	XHHW-2	1	#3	XHHW-2	FR: PB-91-1 TO: ATS-91-1 3 #3/0 >> GEN-91-1 POWER	P-11-102
S-91-050	91E01	2"	1 6	 2/CS-#16	RS-485	1	#14	XHHW-2	FR: PB-91-3 TO: PCM-3-1 1 RS-485 >> GEN-91-1 NETWORK 2 2/CS-#16 >> GEN-91-1 SIGNAL 1 2/CS-#16 >> FIT-10-4 SIGNAL 1 2/CS-#16 >> LT-10-4 SIGNAL 1 2/CS-#16 >> FIT-10-3 SIGNAL 1 2/CS-#16 >> LT-10-3 SIGNAL	 N-11-101 S-11-101 S-10-403 S-10-403 S-10-303 S-10-303
S-91-080	91E01	1"	2	2/CS-#16		1	#14	XHHW-2	FR: VCP-83-1 TO: PCM-3-1 2 2/CS-#16 >> VCP-83-1 SIGNAL	

END OF CONDUIT SCHEDULE

END OF SECTION

SECTION 16990C

CONDUIT SCHEDULE
AREA 12

PART 1 GENERAL

1.01 SUMMARY

A. Conduit requirements:
   1. As defined in Section 16050 and Section 16130.

B. Cable requirements and definitions:
   1. As defined in Section 16050 and Section 16123.
   2. 2/CS#16: 2 conductor, 16 gauge, twisted shielded pair.

PART 2 PRODUCTS

Not Used.

PART 3 EXECUTION

3.01 CONDUIT SCHEDULE

A. Conduit Schedule is presented on the following pages.

CONDUIT SCHEDULE AREA 10

GIBSON OAKS WATER PRODUCTION FACILITY

LAKE GIBSON WELL PUMP

ENGINEER	KTW
REVISION	0
DATE	7/20/20

CONDUIT			CONDUCTORS			GROUND				
NUMBER	DWG	SIZE	#	SIZE	TYPE	#	SIZE	TYPE	DESCRIPTION	CONNECTING SEGMENTS
C-10-605	12E02	0.75"	10	#14	XHHW-2	1	#14	XHHW-2	FR: RVSS-10-2 TO: PCM-2-1 10 #14 >> RVSS-10-2 CONTROL	
C-10-607	12E02	0.75"	2	#14	XHHW-2	1	#14	XHHW-2	FR: SV-10-2 TO: J-BOX 2 #14 >> SV-10-2 CONTROL	C-10-612
C-10-612	12E02	0.75"	2 4	#12 #14	XHHW-2 XHHW-2	1	#12	XHHW-2	FR: J-BOX TO: RVSS-10-2 2 #14 >> SV-10-2 CONTROL 2 #12 >> MWH-10-2 2 #14 >> TSH-10-2	C-10-607 P-10-611 P-10-611
C-10-614	12E02	0.75"	4	#14	XHHW-2	1	#14	XHHW-2	FR: PSL/PSH-10-2 TO: PCM-2-1 2 #14 >> PSL-10-2 CONTROL 2 #14 >> PSH-10-2 CONTROL	
C-10-615	12E02	0.75"	2	#14	XHHW-2	1	#14	XHHW-2	FR: PNL-92 TO: PCM-2-1 2 #14 >> PQM-92-1 CONTROL	
C-10-620	12E02	1.5"	20	#14	XHHW-2	1	#14	XHHW-2	FR: GEN-92-1 TO: PCM-2-1 20 #14 >> GEN-92-1 CONTROL	
C-10-625	12E02	1"	16	#14	XHHW-2	1	#14	XHHW-2	FR: ATS-92-1 TO: PCM-2-1 16 #14 >> ATS-92-1 CONTROL	
C-10-630	12E02	1"	16	#14	XHHW-2	1	#14	XHHW-2	FR: VCP-82-1 TO: PCM-2-1 16 #14 >> VCP-82-1 CONTROL	
L-10-601	12E02	1.5"	4	#3	XHHW-2	1	#8	XHHW-2	FR: LP-92 TO: XFMR-92 4 #3 >> LP-92 POWER	
L-10-605	12E02	0.75"	2	#12	XHHW-2	1	#12	XHHW-2	FR: PCM-2-1 TO: LP-92 2 #12 >> PCM-2-1 POWER	
L-10-608	12E02	0.75"	2	#12	XHHW-2	1	#12	XHHW-2	FR: FIT-10-2 TO: LP-92 2 #12 >> FIT-10-2 POWER	
L-10-630	12E02	0.75"	2	#10	XHHW-2	1	#10	XHHW-2	FR: VCP-82-1 TO: LP-92 2 #10 >> VCP-82-1 POWER	
P-10-601	12E02	2"	3	#3/0	XHHW-2	1	#6	XHHW-2	FR: ATS-92-1 TO: CB-92 3 #3/0 >> ATS-92-1 POWER	
P-10-603	12E02	2"	3	#3/0	XHHW-2	1	#6	XHHW-2	FR: PNL-92 TO: ATS-92-1 3 #3/0 >> PNL-92 POWER	
P-10-605	12E02	2"	3	#3/0	XHHW-2	1	#6	XHHW-2	FR: RVSS-10-2 TO: PNL-92 3 #3/0 >> RVSS-10-2 POWER	
P-10-607	12E02	1.5"	3	#3	XHHW-2	1	#8	XHHW-2	FR: XFMR-92 TO: PNL-92 3 #3 >> XFMR-92 POWER	
P-10-611	12E02	1.5"	3 2 2	#1 #12 #14	XHHW-2 XHHW-2 XHHW-2	1	#6	XHHW-2	FR: PMP-10-2 TO: J-BOX 3 #1 >> PMP-10-2 POWER 2 #12 >> MWH-10-2 2 #14 >> TSH-10-2	C-10-612
P-10-612	12E02	1.5"	3	#1	XHHW-2	1	#6	XHHW-2	FR: J-BOX TO: DISCONNECT 3 #1 >> PMP-10-2 POWER	P-10-615 P-10-611
P-10-615	12E02	1.5"	3	#1	XHHW-2	1	#6	XHHW-2	FR: DISCONNECT TO: RVSS-10-2 3 #1 >> PMP-10-2 POWER	 P-10-612
S-10-608	12E02	0.75"	1	2/CS-#16		1	#14	XHHW-2	FR: FIT-10-2 TO: PCM-2-1 1 2/CS-#16 >> FIT-10-2 SIGNAL	

CONDUIT SCHEDULE AREA 10

GIBSON OAKS WATER PRODUCTION FACILITY

LAKE GIBSON WELL PUMP

ENGINEER	**KTW**
REVISION	**0**
DATE	7/20/20

CONDUIT			**CONDUCTORS**			**GROUND**				
NUMBER	**DWG**	**SIZE**	**#**	**SIZE**	**TYPE**	**#**	**SIZE**	**TYPE**	**DESCRIPTION**	**CONNECTING SEGMENTS**
S-10-610	12E02	0.75"	1	2/CS-#16		1	#14	XHHW-2	FR: LT-10-2 TO: PCM-2-1 1 2/CS-#16 >> LT-10-2 SIGNAL	
S-10-620	12E02	1"	3	2/CS-#16		1	#14	XHHW-2	FR: GEN-92-1 TO: PCM-2-1 3 2/CS-#16 >> GEN-92-1 SIGNAL	
S-10-630	12E02	0.75"	2	2/CS-#16		1	#14	XHHW-2	FR: VCP-82-1 TO: PCM-2-1 2 2/CS-#16 >> VCP-82-1 SIGNAL	

END OF CONDUIT SCHEDULE

END OF SECTION

THIS PAGE INTENTIONALLY LEFT BLANK

SECTION 16990D

CONDUIT SCHEDULE
AREA 50

PART 1 GENERAL

1.01 SUMMARY

A. Conduit requirements:
   1. As defined in Section 16050 and Section 16130.

B. Cable requirements and definitions:
   1. As defined in Section 16050 and Section 16123.
   2. 2/CS#16: 2 conductor, 16 gauge, twisted shielded pair.
   3. PULL: Pull Rope.

PART 2 PRODUCTS

Not Used.

PART 3 EXECUTION

3.01 CONDUIT SCHEDULE

A. Conduit Schedule is presented on the following pages.

CONDUIT SCHEDULE AREA 50

GIBSON OAKS WATER PRODUCTION FACILITY

HIGH SERVICE PUMP STATION

ENGINEER KTW
REVISION 0
DATE 7/20/20

CONDUIT			CONDUCTORS			GROUND				
NUMBER	DWG	SIZE	#	SIZE	TYPE	#	SIZE	TYPE	DESCRIPTION	CONNECTING SEGMENTS
C-50-100	50E01	1"	4	#14	XHHW-2	1	#14	XHHW-2	FR: PSL-52-1	C-50-105
									TO: JUNCTION BOX	
									2 #14 >> PSL-52-1 CONTROL	
									2 #14 >> PSH-52-1 CONTROL	
C-50-104	50E01	0.75"	2	#14	XHHW-2	1	#14	XHHW-2	FR: LCP-52-1	C-50-105
									TO: JUNCTION BOX	
									2 #14 >> LCP-52-1 CONTROL	
C-50-105	50E01	1"	2	#12	XHHW-2	1	#12	XHHW-2	FR: JUNCTION BOX	C-50-107
			8	#14	XHHW-2				TO: JUNCTION BOX	
									2 #14 >> TSH-52-1 POWER	P-50-100
									2 #12 >> MWH-52-1 POWER	P-50-100
									2 #14 >> PSL-52-1 CONTROL	C-50-100
									2 #14 >> PSH-52-1 CONTROL	C-50-100
									2 #14 >> LCP-52-1 CONTROL	C-50-104
C-50-107	50E01	2"	2	#12	XHHW-2	1	#12	XHHW-2	FR: JUNCTION BOX	
	90E02		4	#14	XHHW-2				TO: VFD-52-1	
									2 #14 >> TSH-52-1 POWER	C-50-105
									2 #12 >> MWH-52-1 POWER	C-50-105
									2 #14 >> LCP-52-1 CONTROL	C-50-105
C-50-110	50E01	0.75"	4	#14	XHHW-2	1	#14	XHHW-2	FR: PSL-52-2	C-50-115
									TO: JUNCTION BOX	
									2 #14 >> PSL-52-2 CONTROL	
									2 #14 >> PSH-52-2 CONTROL	
C-50-114	50E01	0.75"	2	#14	XHHW-2	1	#14	XHHW-2	FR: LCP-52-2	C-50-115
									TO: JUNCTION BOX	
									2 #14 >> LCP-52-2 CONTROL	
C-50-115	50E01	1"	2	#12	XHHW-2	1	#12	XHHW-2	FR: JUNCTION BOX	C-50-117
			8	#14	XHHW-2				TO: JUNCTION BOX	
									2 #14 >> TSH-52-2 POWER	P-50-110
									2 #12 >> MWH-52-2 POWER	P-50-110
									2 #14 >> PSL-52-2 CONTROL	C-50-110
									2 #14 >> PSH-52-2 CONTROL	C-50-110
									2 #14 >> LCP-52-2 CONTROL	C-50-114
C-50-117	50E01	2"	2	#12	XHHW-2	1	#12	XHHW-2	FR: JUNCTION BOX	
	90E02		4	#14	XHHW-2				TO: VFD-52-2	
									2 #14 >> TSH-52-2 POWER	C-50-115
									2 #12 >> MWH-52-2 POWER	C-50-115
									2 #14 >> LCP-52-2 CONTROL	C-50-115
C-50-120	50E01	0.75"	4	#14	XHHW-2	1	#14	XHHW-2	FR: PSL-54-1	C-50-125
									TO: JUNCTION BOX	
									2 #14 >> PSL-54-1 CONTROL	
									2 #14 >> PSH-54-1 CONTROL	
C-50-124	50E01	0.75"	2	#14	XHHW-2	1	#14	XHHW-2	FR: LCP-54-1	C-50-125
									TO: JUNCTION BOX	
									2 #14 >> LCP-54-1 CONTROL	
C-50-125	50E01	1"	2	#12	XHHW-2	1	#12	XHHW-2	FR: JUNCTION BOX	C-50-127
			8	#14	XHHW-2				TO: JUNCTION BOX	
									2 #14 >> TSH-54-1 POWER	P-50-120
									2 #12 >> MWH-54-1 POWER	P-50-120
									2 #14 >> PSL-54-1 CONTROL	C-50-120
									2 #14 >> PSH-54-1 CONTROL	C-50-120
									2 #14 >> LCP-54-1 CONTROL	C-50-124
C-50-127	50E01	2"	2	#12	XHHW-2	1	#12	XHHW-2	FR: JUNCTION BOX	
	90E02		4	#14	XHHW-2				TO: VFD-54-1	
									2 #14 >> TSH-54-1 POWER	C-50-125
									2 #12 >> MWH-54-1 POWER	C-50-125
									2 #14 >> LCP-54-1 CONTROL	C-50-125
C-50-130	50E01	0.75"	4	#14	XHHW-2	1	#14	XHHW-2	FR: PSL-54-2	C-50-135
									TO: CONDUIT TEE	
									2 #14 >> PSL-54-2 CONTROL	
									2 #14 >> PSH-54-2 CONTROL	
C-50-134	50E01	0.75"	2	#14	XHHW-2	1	#14	XHHW-2	FR: LCP-54-2	C-50-135
									TO: JUNCTION BOX	
									2 #14 >> LCP-54-2 CONTROL	
C-50-135	50E01	1"	2	#12	XHHW-2	1	#12	XHHW-2	FR: JUNCTION BOX	C-50-137
			8	#14	XHHW-2				TO: JUNCTION BOX	
									2 #14 >> TSH-54-2 POWER	P-50-130
									2 #12 >> MWH-54-2 POWER	P-50-130
									2 #14 >> PSL-54-2 CONTROL	C-50-130
									2 #14 >> PSH-54-2 CONTROL	C-50-130
									2 #14 >> LCP-54-2 CONTROL	C-50-134

CONDUIT SCHEDULE AREA 50

GIBSON OAKS WATER PRODUCTION FACILITY

HIGH SERVICE PUMP STATION

ENGINEER	KTW
REVISION	0
DATE	7/20/20

CONDUIT			CONDUCTORS			GROUND				
NUMBER	DWG	SIZE	#	SIZE	TYPE	#	SIZE	TYPE	DESCRIPTION	CONNECTING SEGMENTS
C-50-137	50E01	2"	2	#12	XHHW-2	1	#12	XHHW-2	FR: JUNCTION BOX	
	90E02		4	#14	XHHW-2				TO: VFD-54-2	
									2 #14 >> TSH-54-2 POWER	C-50-135
									2 #12 >> MWH-54-2 POWER	C-50-135
									2 #14 >> LCP-54-2 CONTROL	C-50-135
C-50-140	50E01	0.75"	4	#14	XHHW-2	1	#14	XHHW-2	FR: PSL-54-3	C-50-145
									TO: CONDUIT TEE	
									2 #14 >> PSL-54-3 CONTROL	
									2 #14 >> PSH-54-3 CONTROL	
C-50-144	50E01	0.75"	2	#14	XHHW-2	1	#14	XHHW-2	FR: LCP-54-3	C-50-145
									TO: JUNCTION BOX	
									2 #14 >> LCP-54-3 CONTROL	
C-50-145	50E01	1"	2	#12	XHHW-2	1	#12	XHHW-2	FR: JUNCTION BOX	C-50-147
			8	#14	XHHW-2				TO: JUNCTION BOX	
									2 #14 >> TSH-54-3 POWER	P-50-140
									2 #12 >> MWH-54-3 POWER	P-50-140
									2 #14 >> PSL-54-3 CONTROL	C-50-140
									2 #14 >> PSH-54-3 CONTROL	C-50-140
									2 #14 >> LCP-54-3 CONTROL	C-50-144
C-50-147	50E01	2"	2	#12	XHHW-2	1	#12	XHHW-2	FR: JUNCTION BOX	
	90E02		4	#14	XHHW-2				TO: VFD-54-3	
									2 #14 >> TSH-54-3 POWER	C-50-145
									2 #12 >> MWH-54-3 POWER	C-50-145
									2 #14 >> LCP-54-3 CONTROL	C-50-145
C-50-150	50E01	2"	24	#14	XHHW-2	1	#14	XHHW-2	FR: JUNCTION BOX	
	90E02								TO: PCM-1-1	
									2 #14 >> FSL-40-2 CONTROL	C-50-156
									2 #14 >> FSH-54-1 CONTROL	C-50-154
									2 #14 >> PSL-54-3 CONTROL	C-50-145
									2 #14 >> PSH-54-3 CONTROL	C-50-145
									2 #14 >> PSL-54-2 CONTROL	C-50-135
									2 #14 >> PSH-54-2 CONTROL	C-50-135
									2 #14 >> PSL-54-1 CONTROL	C-50-125
									2 #14 >> PSH-54-1 CONTROL	C-50-125
									2 #14 >> PSL-52-2 CONTROL	C-50-115
									2 #14 >> PSH-52-2 CONTROL	C-50-115
									2 #14 >> PSL-52-1 CONTROL	C-50-105
									2 #14 >> PSH-52-1 CONTROL	C-50-105
C-50-154	50E01	0.75"	2	#14	XHHW-2	1	#14	XHHW-2	FR: FSH-54-1	C-50-150
									TO: JUNCTION BOX	
									2 #14 >> FSH-54-1 CONTROL	
C-50-156	50E01	0.75"	2	#14	XHHW-2	1	#14	XHHW-2	FR: FSL-40-2	C-50-150
									TO: JUNCTION BOX	
									2 #14 >> FSL-40-2 CONTROL	
L-50-100	50E01	0.75"	2	#12	XHHW-2	1	#12	XHHW-2	FR: LIGHT POLE	
									TO: LIGHT POLE	
									2 #12 >> LIGHT POLE POWER	
L-50-101	50E01	0.75"	2	#12	XHHW-2	1	#12	XHHW-2	FR: LIGHT POLE	
									TO: LIGHT POLE	
									2 #12 >> LIGHT POLE POWER	
L-50-103	50E01	2"	2	#12	XHHW-2	1	#12	XHHW-2	FR: LIGHT POLE	
	90E02								TO: LP-2	
									2 #12 >> LIGHT POLE POWER	
L-50-105	50E01	0.75"	2	#12	XHHW-2	1	#12	XHHW-2	FR: RECEPTACLE AT PMP-54-2	
									TO: RECEPTACLE AT PMP-52-2	
									2 #12 >> RECEPTACLE POWER	
L-50-106	50E01	2"	2	#12	XHHW-2	1	#12	XHHW-2	FR: RECEPTACLE AT PMP-52-2	
	90E02								TO: LP-2	
									2 #12 >> RECEPTACLE POWER	
L-50-107	50E01	0.75"	2	#12	XHHW-2	1	#12	XHHW-2	FR: POLE LIGHT	
									TO: POLE LIGHT	
									2 #12 >> POLE LIGHT POWER	
L-50-108	50E01	0.75"	2	#12	XHHW-2	1	#12	XHHW-2	FR: POLE LIGHT	
									TO: POLE LIGHT	
									2 #12 >> POLE LIGHT POWER	
L-50-150	50E03	2"	2	#12	XHHW-2	1	#12	XHHW-2	FR: FIT-70-1	
	90E02								TO: LP-1	
									2 #12 >> FIT-70-1 POWER	

CONDUIT SCHEDULE AREA 50

GIBSON OAKS WATER PRODUCTION FACILITY

HIGH SERVICE PUMP STATION

ENGINEER	KTW
REVISION	0
DATE	7/20/20

CONDUIT			**CONDUCTORS**			**GROUND**				
NUMBER	**DWG**	**SIZE**	**#**	**SIZE**	**TYPE**	**#**	**SIZE**	**TYPE**	**DESCRIPTION**	**CONNECTING SEGMENTS**
P-50-100	50E01	2.5"	3 2 2	#4/0 #12 #14	XHHW-2 XHHW-2 XHHW-2	1	#2	XHHW-2	FR: PMP-52-1 TO: JUNCTION BOX 3 #4/0 >> PMP-52-1 POWER 2 #14 >> TSH-52-1 POWER 2 #12 >> MWH-52-1 POWER	C-50-105
P-50-101	50E01	2.5"	3	#4/0	XHHW-2	1	#2	XHHW-2	FR: JUNCTION BOX TO: DISCONNECT 3 #4/0 >> PMP-52-1 POWER	P-50-103 P-50-100
P-50-103	50E01 90E02	3"	3	#4/0	XHHW-2	1	#2	XHHW-2	FR: DISCONNECT TO: VFD-52-1 3 #4/0 >> PMP-52-1 POWER	P-50-101
P-50-110	50E01	2.5"	3 2 2	#4/0 #12 #14	XHHW-2 XHHW-2 XHHW-2	1	#2	XHHW-2	FR: PMP-52-2 TO: JUNCTION BOX 3 #4/0 >> PMP-52-2 POWER 2 #14 >> TSH-52-2 POWER 2 #12 >> MWH-52-2 POWER	C-50-115
P-50-111	50E01	2.5"	3	#4/0	XHHW-2	1	#2	XHHW-2	FR: JUNCTION BOX TO: DISCONNECT 3 #4/0 >> PMP-52-2 POWER	P-50-113 P-50-110
P-50-113	50E01 90E02	3"	3	#4/0	XHHW-2	1	#2	XHHW-2	FR: DISCONNECT TO: VFD-52-2 3 #4/0 >> PMP-52-2 POWER	P-50-111
P-50-120	50E01	2"	3 2 2	#3/0 #12 #14	XHHW-2 XHHW-2 XHHW-2	1	#2	XHHW-2	FR: PMP-54-1 TO: JUNCTION BOX 3 #3/0 >> PMP-54-1 POWER 2 #14 >> TSH-54-1 POWER 2 #12 >> MWH-54-1 POWER	C-50-125
P-50-121	50E01	2"	3	#3/0	XHHW-2	1	#2	XHHW-2	FR: JUNCTION BOX TO: DISCONNECT 3 #3/0 >> PMP-54-1 POWER	P-50-123 P-50-120
P-50-122	50E01	2"	3	#3/0	XHHW-2	1	#2	XHHW-2	FR: PMP-54-1 TO: JUNCTION BOX 3 #3/0 >> PMP-54-1 POWER	P-50-124
P-50-123	50E01 90E02	2"	3	#3/0	XHHW-2	1	#2	XHHW-2	FR: DISCONNECT TO: VFD-54-1 3 #3/0 >> PMP-54-1 POWER	P-50-121
P-50-124	50E01	2"	3	#3/0	XHHW-2	1	#2	XHHW-2	FR: JUNCTION BOX TO: DISCONNECT 3 #3/0 >> PMP-54-1 POWER	P-50-125 P-50-122
P-50-125	50E01 90E02	2"	3	#3/0	XHHW-2	1	#2	XHHW-2	FR: DISCONNECT TO: VFD-54-1 3 #3/0 >> PMP-54-1 POWER	P-50-124
P-50-130	50E01	2"	3 2 2	#3/0 #12 #14	XHHW-2 XHHW-2 XHHW-2	1	#2	XHHW-2	FR: PMP-54-2 TO: JUNCTION BOX 3 #3/0 >> PMP-54-2 POWER 2 #14 >> TSH-54-2 POWER 2 #12 >> MWH-54-2 POWER	C-50-135
P-50-131	50E01	2"	3	#3/0	XHHW-2	1	#2	XHHW-2	FR: JUNCTION BOX TO: DISCONNECT 3 #3/0 >> PMP-54-2 POWER	P-50-133 P-50-130
P-50-132	50E01	2"	3	#3/0	XHHW-2	1	#2	XHHW-2	FR: PMP-54-2 TO: JUNCTION BOX 3 #3/0 >> PMP-54-2 POWER	P-50-134
P-50-133	50E01 90E02	2"	3	#3/0	XHHW-2	1	#2	XHHW-2	FR: DISCONNECT TO: VFD-54-2 3 #3/0 >> PMP-54-2 POWER	P-50-131
P-50-134	50E01	2"	3	#3/0	XHHW-2	1	#2	XHHW-2	FR: JUNCTION BOX TO: DISCONNECT 3 #3/0 >> PMP-54-2 POWER	P-50-135 P-50-132
P-50-135	50E01 90E02	2"	3	#3/0	XHHW-2	1	#2	XHHW-2	FR: DISCONNECT TO: VFD-54-2 3 #3/0 >> PMP-54-2 POWER	P-50-134

CONDUIT SCHEDULE AREA 50

GIBSON OAKS WATER PRODUCTION FACILITY

HIGH SERVICE PUMP STATION

ENGINEER KTW
REVISION 0
DATE 7/20/20

CONDUIT			CONDUCTORS			GROUND				
NUMBER	**DWG**	**SIZE**	**#**	**SIZE**	**TYPE**	**#**	**SIZE**	**TYPE**	**DESCRIPTION**	**CONNECTING SEGMENTS**
P-50-140	50E01	2"	3 2 2	#3/0 #12 #14	XHHW-2 XHHW-2 XHHW-2	1	#2	XHHW-2	FR: PMP-54-3 TO: JUNCTION BOX 3 #3/0 >> PMP-54-3 POWER 2 #14 >> TSH-54-3 POWER 2 #12 >> MWH-54-3 POWER	C-50-145
P-50-141	50E01	2"	3	#3/0	XHHW-2	1	#2	XHHW-2	FR: JUNCTION BOX TO: DISCONNECT 3 #3/0 >> PMP-54-3 POWER	P-50-143 P-50-140
P-50-142	50E01	2"	3	#3/0	XHHW-2	1	#2	XHHW-2	FR: PMP-54-3 TO: JUNCTION BOX 3 #3/0 >> PMP-54-3 POWER	P-50-144
P-50-143	50E01 90E02	2"	3	#3/0	XHHW-2	1	#2	XHHW-2	FR: DISCONNECT TO: VFD-54-3 3 #3/0 >> PMP-54-3 POWER	 P-50-141
P-50-144	50E01	2"	3	#3/0	XHHW-2	1	#2	XHHW-2	FR: JUNCTION BOX TO: DISCONNECT 3 #3/0 >> PMP-54-3 POWER	P-50-145 P-50-142
P-50-145	50E01 90E02	2"	3	#3/0	XHHW-2	1	#2	XHHW-2	FR: DISCONNECT TO: VFD-54-3 3 #3/0 >> PMP-54-3 POWER	 P-50-144
S-50-150	50E03	1"	2	2/CS-#16		1	#14	XHHW-2	FR: PIT-70-1, PIT-70-2 TO: CONDUIT TEE 1 2/CS-#16 >> PIT-70-1 SIGNAL 1 2/CS-#16 >> PIT-70-2 SIGNAL	S-50-155
S-50-152	50E03	0.75"	1	2/CS-#16		1	#14	XHHW-2	FR: FIT-70-1 TO: CONDUIT TEE 1 2/CS-#16 >> FIT-70-1 SIGNAL	S-50-155
S-50-155	50E03 90E02	2"	3	2/CS-#16		1	#14	XHHW-2	FR: CONDUIT TEE TO: PCM-1-1 1 2/CS-#16 >> FIT-70-1 SIGNAL 1 2/CS-#16 >> PIT-70-1 SIGNAL 1 2/CS-#16 >> PIT-70-2 SIGNAL	 S-50-152 S-50-150 S-50-150
X-50-100	50E01	2"	1	PULL	ROPE				FR: STUB-UP AT PMP-54-4 (FUTURE) TO: STUB-UP AT VFD-54-4 (FUTURE) 1 PULL >> SPARE	
X-50-101	50E01	2"	1	PULL	ROPE				FR: STUB-UP AT PMP-54-4 (FUTURE) TO: STUB-UP AT VFD-54-4 (FUTURE) 1 PULL >> SPARE	
X-50-102	50E01	2"	1	PULL	ROPE				FR: STUB-UP AT PMP-54-4 (FUTURE) TO: STUB-UP AT VFD-54-4 (FUTURE) 1 PULL >> SPARE	
X-50-105	50E01	2"	1	PULL	ROPE				FR: STUB-UP AT PMP-54-4 (FUTURE) TO: RECEPTACLE AT PMP-54-2 1 PULL >> SPARE	

END OF CONDUIT SCHEDULE

END OF SECTION

SECTION 16990E

CONDUIT SCHEDULE
AREA 80

PART 1 GENERAL

1.01 SUMMARY

A. Conduit requirements:
   1. As defined in Section 16050 and Section 16130.

B. Cable requirements and definitions:
   1. As defined in Section 16050 and Section 16123.
   2. 2/CS#16: 2 conductor, 16 gauge, twisted shielded pair.
   3. PULL: Pull Rope.

PART 2 PRODUCTS

Not Used.

PART 3 EXECUTION

3.01 CONDUIT SCHEDULE

A. Conduit Schedule is presented on the following pages.

CONDUIT SCHEDULE AREA 80

GIBSON OAKS WATER PRODUCTION FACILITY

CHEMICAL BUILDING

ENGINEER	**KTW**
REVISION	**0**
DATE	7/20/20

CONDUIT			**CONDUCTORS**			**GROUND**				
NUMBER	**DWG**	**SIZE**	**#**	**SIZE**	**TYPE**	**#**	**SIZE**	**TYPE**	**DESCRIPTION**	**CONNECTING SEGMENTS**
C-80-130	80E01	1"	16	#14	XHHW-2	1	#14	XHHW-2	FR: VCP-81-1	C-80-251
									TO: J-BOX	
									8 #14 >> PMP-81-1 CONTROL	
									8 #14 >> PMP-81-2 CONTROL	
C-80-150	80E01	0.75"	2	#14	XHHW-2	1	#14	XHHW-2	FR: FIT-81-1	C-80-251
									TO: J-BOX	
									2 #14 >> FIT-81-1 CONTROL	
C-80-160	80E01	0.75"	2	#12	XHHW-2	1	#12	XHHW-2	FR: FSH-80-1	C-80-261
			2	#14	XHHW-2				TO: CONDUIT TEE	
									2 #14 >> FSH-80-1 CONTROL	
									2 #12 >> FSH-80-1 POWER	
C-80-170	80E01	0.75"	2	#14	XHHW-2	1	#14	XHHW-2	FR: LSH-80-1	C-80-310
									TO: CONDUIT TEE	
									2 #14 >> LSH-80-1 CONTROL	
C-80-230	80E01	1"	16	#14	XHHW-2	1	#14	XHHW-2	FR: VCP-81-3	C-80-251
									TO: J-BOX	
									8 #14 >> PMP-81-3 CONTROL	
									8 #14 >> PMP-81-4 CONTROL	
C-80-250	80E01	0.75"	2	#14	XHHW-2	1	#14	XHHW-2	FR: FIT-81-3	C-80-251
									TO: J-BOX	
									2 #14 >> FIT-81-3 CONTROL	
C-80-251	80E01	1.5"	36	#14	XHHW-2	1	#14	XHHW-2	FR: J-BOX	C-80-500
									TO: PB80-1	
									8 #14 >> PMP-81-1 CONTROL	C-80-130
									8 #14 >> PMP-81-2 CONTROL	C-80-130
									8 #14 >> PMP-81-3 CONTROL	C-80-230
									8 #14 >> PMP-81-4 CONTROL	C-80-230
									2 #14 >> FIT-81-1 CONTROL	C-80-150
									2 #14 >> FIT-81-3 CONTROL	C-80-250
C-80-260	80E01	0.75"	2	#12	XHHW-2	1	#12	XHHW-2	FR: FSH-80-2	C-80-261
			2	#14	XHHW-2				TO: CONDUIT TEE	
									2 #14 >> FSH-80-2 CONTROL	
									2 #12 >> FSH-80-2 POWER	
C-80-261	80E01	1"	4	#12	XHHW-2	1	#12	XHHW-2	FR: CONDUIT TEE	C-80-500
			4	#14	XHHW-2				TO: PB80-1	
									2 #14 >> FSH-80-1 CONTROL	C-80-160
									2 #12 >> FSH-80-1 POWER	C-80-160
									2 #14 >> FSH-80-2 CONTROL	C-80-260
									2 #12 >> FSH-80-2 POWER	C-80-260
C-80-300	80E01	0.75"	4	#14	XHHW-2	1	#14	XHHW-2	FR: LCP-80-1	C-80-310
									TO: CONDUIT TEE	
									4 #14 >> LCP-80-1 CONTROL	
C-80-310	80E01	0.75"	6	#14	XHHW-2	1	#14	XHHW-2	FR: CONDUIT TEE	C-80-500
									TO: PB80-1	
									2 #14 >> LSH-80-1 CONTROL	C-80-170
									4 #14 >> LCP-80-1 CONTROL	C-80-300
C-80-500	80E01	2"	4	#12	XHHW-2	1	#12	XHHW-2	FR: PB80-1	
	90E02		46	#14	XHHW-2				TO: PCM-1-1	
									8 #14 >> PMP-81-1 CONTROL	C-80-251
									8 #14 >> PMP-81-2 CONTROL	C-80-251
									8 #14 >> PMP-81-3 CONTROL	C-80-251
									8 #14 >> PMP-81-4 CONTROL	C-80-251
									2 #14 >> FIT-81-1 CONTROL	C-80-251
									2 #14 >> FIT-81-3 CONTROL	C-80-251
									2 #14 >> FSH-80-1 CONTROL	C-80-261
									2 #12 >> FSH-80-1 POWER	C-80-261
									2 #14 >> FSH-80-2 CONTROL	C-80-261
									2 #12 >> FSH-80-2 POWER	C-80-261
									2 #14 >> LSH-80-1 CONTROL	C-80-310
									4 #14 >> LCP-80-1 CONTROL	C-80-310
L-80-110	80E01	0.75"	2	#12	XHHW-2	1	#12	XHHW-2	FR: PMP-81-1	
									TO: VCP-81-1	
									2 #12 >> PMP-81-1 POWER	
L-80-120	80E01	0.75"	2	#12	XHHW-2	1	#12	XHHW-2	FR: PMP-81-2	
									TO: VCP-81-1	
									2 #12 >> PMP-81-2 POWER	
L-80-130	80E01	0.75"	2	#12	XHHW-2	1	#12	XHHW-2	FR: VCP-81-1	L-80-231
									TO: CONDUIT TEE	
									2 #12 >> VCP-81-1 POWER	

CONDUIT SCHEDULE AREA 80

GIBSON OAKS WATER PRODUCTION FACILITY

CHEMICAL BUILDING

ENGINEER KTW
REVISION 0
DATE 7/20/20

CONDUIT			CONDUCTORS			GROUND				
NUMBER	DWG	SIZE	#	SIZE	TYPE	#	SIZE	TYPE	DESCRIPTION	CONNECTING SEGMENTS
L-80-150	80E01	0.75"	2	#12	XHHW-2	1	#12	XHHW-2	FR: FIT-81-1	L-80-251
									TO: CONDUIT TEE	
									2 #12 >> FIT-81-1 POWER	
L-80-210	80E01	0.75"	2	#12	XHHW-2	1	#12	XHHW-2	FR: PMP-81-3	
									TO: VCP-81-3	
									2 #12 >> PMP-81-3 POWER	
L-80-220	80E01	0.75"	2	#12	XHHW-2	1	#12	XHHW-2	FR: PMP-81-4	
									TO: VCP-81-3	
									2 #12 >> PMP-81-4 POWER	
L-80-230	80E01	0.75"	2	#12	XHHW-2	1	#12	XHHW-2	FR: VCP-81-3	L-80-231
									TO: CONDUIT TEE	
									2 #12 >> VCP-81-3 POWER	
L-80-231	80E01	0.75"	4	#12	XHHW-2	1	#12	XHHW-2	FR: CONDUIT TEE	L-80-502
									TO: PB80-1	
									2 #12 >> VCP-81-1 POWER	L-80-130
									2 #12 >> VCP-81-3 POWER	L-80-230
L-80-250	80E01	0.75"	2	#12	XHHW-2	1	#12	XHHW-2	FR: FIT-81-3	L-80-251
									TO: CONDUIT TEE	
									2 #12 >> FIT-81-3 POWER	
L-80-251	80E01	0.75"	4	#12	XHHW-2	1	#12	XHHW-2	FR: CONDUIT TEE	L-80-500
									TO: PB80-1	
									2 #12 >> FIT-81-1 POWER	L-80-150
									2 #12 >> FIT-81-3 POWER	L-80-250
L-80-300	80E01	0.75"	2	#12	XHHW-2	1	#12	XHHW-2	FR: LCP-80-1	L-80-502
									TO: PB80-1	
									2 #12 >> LCP-80-1 POWER	
L-80-500	80E01	2"	4	#12	XHHW-2	1	#12	XHHW-2	FR: PB80-1	
	90E02								TO: LP-1	
									2 #12 >> FIT-81-1 POWER	L-80-251
									2 #12 >> FIT-81-3 POWER	L-80-251
L-80-501	80E01	0.75"	2	#10	XHHW-2	1	#10	XHHW-2	FR: PB80-1	
	90E02								TO: LP-2	
									2 #10 >> CHEM BUILDING LIGHT POWER	
L-80-502	80E01	0.75"	6	#12	XHHW-2	1	#12	XHHW-2	FR: PB80-1	
	90E02								TO: LP-1	
									2 #12 >> VCP-81-1 POWER	L-80-231
									2 #12 >> VCP-81-3 POWER	L-80-231
									2 #12 >> LCP-80-1 POWER	L-80-300
S-80-130	80E01	1"	2	2/CS-#16		1	#14	XHHW-2	FR: VCP-81-1	S-80-231
									TO: CONDUIT TEE	
									1 2/CS-#16 >> PMP-81-1 SIGNAL	
									1 2/CS-#16 >> PMP-81-2 SIGNAL	
S-80-140	80E01	0.75"	1	2/CS-#16		1	#14	XHHW-2	FR: LIT-80-1	S-80-250
									TO: CONDUIT TEE	
									1 2/CS-#16 >> LIT-80-1 SIGNAL	
S-80-230	80E01	1"	2	2/CS-#16		1	#14	XHHW-2	FR: VCP-81-3	S-80-231
									TO: CONDUIT TEE	
									1 2/CS-#16 >> PMP-81-3 SIGNAL	
									1 2/CS-#16 >> PMP-81-4 SIGNAL	
S-80-231	80E01	1.5"	4	2/CS-#16		1	#14	XHHW-2	FR: CONDUIT TEE	S-80-500
									TO: PULLBOX	
									1 2/CS-#16 >> PMP-81-1 SIGNAL	S-80-130
									1 2/CS-#16 >> PMP-81-2 SIGNAL	S-80-130
									1 2/CS-#16 >> PMP-81-3 SIGNAL	S-80-230
									1 2/CS-#16 >> PMP-81-4 SIGNAL	S-80-230
S-80-240	80E01	0.75"	1	2/CS-#16		1	#14	XHHW-2	FR: LIT-80-2	S-80-250
									TO: CONDUIT TEE	
									1 2/CS-#16 >> LIT-80-2 SIGNAL	
S-80-250	80E01	1"	2	2/CS-#16		1	#14	XHHW-2	FR: CONDUIT TEE	S-80-500
									TO: PB80-2	
									1 2/CS-#16 >> LIT-80-2 SIGNAL	S-80-240
									1 2/CS-#16 >> LIT-80-1 SIGNAL	S-80-140
S-80-300	80E01	1"	2	2/CS-#16		1	#14	XHHW-2	FR: LCP-80-1	S-80-500
									TO: PULLBOX	
									2 2/CS-#16 >> LCP-80-1 SIGNAL	

CONDUIT SCHEDULE AREA 80

GIBSON OAKS WATER PRODUCTION FACILITY

CHEMICAL BUILDING

ENGINEER KTW
REVISION 0
DATE 7/20/20

CONDUIT			CONDUCTORS			GROUND				
NUMBER	**DWG**	**SIZE**	**#**	**SIZE**	**TYPE**	**#**	**SIZE**	**TYPE**	**DESCRIPTION**	**CONNECTING SEGMENTS**
S-80-500	80E01	2"	8	2/CS-#16		1	#14	XHHW-2	FR: PB80-2	
	90E02								TO: PCM-1-1	
									1 2/CS-#16 >> PMP-81-1 SIGNAL	S-80-231
									1 2/CS-#16 >> PMP-81-2 SIGNAL	S-80-231
									1 2/CS-#16 >> PMP-81-3 SIGNAL	S-80-231
									1 2/CS-#16 >> PMP-81-4 SIGNAL	S-80-231
									1 2/CS-#16 >> LIT-80-2 SIGNAL	S-80-250
									1 2/CS-#16 >> LIT-80-1 SIGNAL	S-80-250
									2 2/CS-#16 >> LCP-80-1 SIGNAL	S-80-300
X-80-001	80E01	2"	1	PULL	ROPE				FR: PB80-2	
	90E02								TO: PCM-1-1	
									1 PULL >> SPARE	
X-80-002	80E01	2"	1	PULL	ROPE				FR: PB80-2	
	90E02								TO: PCM-1-1	
									1 PULL >> SPARE	
X-80-003	80E01	2"	1	PULL	ROPE				FR: PB80-2	
	90E02								TO: PCM-1-1	
									1 PULL >> SPARE	
X-80-011	80E01	2"	1	PULL	ROPE				FR: PB80-1	
	90E02								TO: PCM-1-1	
									1 PULL >> SPARE	
X-80-012	80E01	2"	1	PULL	ROPE				FR: PB80-1	
	90E02								TO: LP-1	
									1 PULL >> SPARE	

END OF CONDUIT SCHEDULE

END OF SECTION

SECTION 16990F

CONDUIT SCHEDULE
AREA 90

PART 1 GENERAL

1.01 SUMMARY

A. Conduit requirements:
   1. As defined in Section 16050 and Section 16130.

B. Cable requirements and definitions:
   1. As defined in Section 16050 and Section 16123.
   2. 2/CS#16: 2 conductor, 16 gauge, twisted shielded pair.
   3. CAT6: Category 6 Ethernet cable.
   4. MFR: Manufacturer or vendor furnished cable.
   5. PULL: Pull Rope.
   6. RS-485 RS-485 cable.

PART 2 PRODUCTS

Not Used.

PART 3 EXECUTION

3.01 CONDUIT SCHEDULE

A. Conduit Schedule is presented on the following pages.

CONDUIT SCHEDULE AREA 90

GIBSON OAKS WATER PRODUCTION FACILITY

ELECTRICAL ROOM

ENGINEER	**KTW**
REVISION	**0**
DATE	7/20/20

CONDUIT			**CONDUCTORS**			**GROUND**				
NUMBER	**DWG**	**SIZE**	**#**	**SIZE**	**TYPE**	**#**	**SIZE**	**TYPE**	**DESCRIPTION**	**CONNECTING SEGMENTS**
C-90-105	90E03	0.75"	10	#14	XHHW-2	1	#14	XHHW-2	FR: MCC-2	C-90-107
									TO: CONDUIT TEE	
									10 #14 >> FVNR-10-2 CONTROL	
C-90-106	90E03	0.75"	10	#14	XHHW-2	1	#14	XHHW-2	FR: MCC-1	C-90-107
									TO: CONDUIT TEE	
									10 #14 >> FVNR-10-1 CONTROL	
C-90-107	90E03	1.5"	20	#14	XHHW-2	1	#14	XHHW-2	FR: CONDUIT TEE	
									TO: PCM-1-1	
									10 #14 >> FVNR-10-1 CONTROL	C-90-106
									10 #14 >> FVNR-10-2 CONTROL	C-90-105
C-90-111	90E03	1"	18	#14	XHHW-2	1	#14	XHHW-2	FR: VFD-52-1	C-90-113
									TO: CONDUIT TEE	
									18 #14 >> VFD-52-1 CONTROL	
C-90-112	90E03	1"	18	#14	XHHW-2	1	#14	XHHW-2	FR: VFD-54-3	C-90-113
									TO: CONDUIT TEE	
									18 #14 >> VFD-54-3 CONTROL	
C-90-113	90E03	1.5"	36	#14	XHHW-2	1	#14	XHHW-2	FR: CONDUIT TEE	C-90-115
									TO: CONDUIT TEE	
									18 #14 >> VFD-54-3 CONTROL	C-90-112
									18 #14 >> VFD-52-1 CONTROL	C-90-111
C-90-114	90E03	1"	18	#14	XHHW-2	1	#14	XHHW-2	FR: VFD-54-1	C-90-115
									TO: CONDUIT TEE	
									18 #14 >> VFD-54-1 CONTROL	
C-90-115	90E03	2"	54	#14	XHHW-2	1	#14	XHHW-2	FR: CONDUIT TEE	
									TO: PCM-1-1	
									18 #14 >> VFD-54-1 CONTROL	C-90-114
									18 #14 >> VFD-54-3 CONTROL	C-90-113
									18 #14 >> VFD-52-1 CONTROL	C-90-113
C-90-117	90E03	1"	18	#14	XHHW-2	1	#14	XHHW-2	FR: VFD-52-2	C-90-120
									TO: CONDUIT TEE	
									18 #14 >> VFD-52-2 CONTROL	
C-90-118	90E03	1"	18	#14	XHHW-2	1	#14	XHHW-2	FR: VFD-54-2	C-90-120
									TO: CONDUIT TEE	
									18 #14 >> VFD-54-2 CONTROL	
C-90-120	90E03	1.5"	36	#14	XHHW-2	1	#14	XHHW-2	FR: CONDUIT TEE	
									TO: PCM-1-1	
									18 #14 >> VFD-54-2 CONTROL	C-90-118
									18 #14 >> VFD-52-2 CONTROL	C-90-117
C-90-130	90E03	1"	16	#14	XHHW-2	1	#14	XHHW-2	FR: ATS-90-1	
									TO: PCM-1-1	
									16 #14 >> ATS-90-1 CONTROL	
C-90-135	90E03	0.75"	2	#14	XHHW-2	1	#14	XHHW-2	FR: SHUNT TRIP PUSHBUTTON	
									TO: ATS-90-1	
									2 #14 >> SHUNT TRIP PUSHBUTTON CONTROL	
C-90-140	90E05	2"	18	#14	XHHW-2	1	#14	XHHW-2	FR: GEN-90-1	C-90-150
									TO: J-BOX	
									18 #14 >> GEN-90-1 CONTROL	
C-90-145	90E05	2"	2	#14	XHHW-2	1	#14	XHHW-2	FR: VCP-90-1	C-90-150
									TO: J-BOX	
									2 #14 >> VCP-90-1 CONTROL	
C-90-150	90E05	2"	20	#14	XHHW-2	1	#14	XHHW-2	FR: J-BOX	
	90E02								TO: PCM-1-1	
									2 #14 >> VCP-90-1 CONTROL	C-90-145
									18 #14 >> GEN-90-1 CONTROL	C-90-140
C-90-155	90E05	2"	4	#14	XHHW-2	1	#14	XHHW-2	FR: VCP-90-5	
	90E02								TO: PCM-1-1	
									4 #14 >> VCP-90-5 CONTROL	
L-90-110	90E03	0.75"	4	#10	XHHW-2	1	#10	XHHW-2	FR: J-BOX	
			2	#12	XHHW-2				TO: LP-1	
									2 #10 >> FIT-40-1 POWER	L-40-105
									2 #10 >> FIT-10-1 POWER	L-40-105
									2 #12 >> FIT-70-1 POWER	L-50-150
L-90-111	90E03	0.75"	2	#10	XHHW-2	1	#10	XHHW-2	FR: J-BOX	
									TO: LP-1	
									2 #10 >> VCP-90-1 POWER	L-90-150

CONDUIT SCHEDULE AREA 90

GIBSON OAKS WATER PRODUCTION FACILITY

ELECTRICAL ROOM

ENGINEER	**KTW**
REVISION	**0**
DATE	7/20/20

CONDUIT			CONDUCTORS			GROUND				
NUMBER	DWG	SIZE	#	SIZE	TYPE	#	SIZE	TYPE	DESCRIPTION	CONNECTING SEGMENTS
L-90-115	90E03	1"	2	#8	XHHW-2	1	#8	XHHW-2	FR: J-BOX	
			4	#10	XHHW-2				TO: LP-2	
									2 #10 >> RECEPTACLE POWER	L-40-105
									2 #10 >> POLE LIGHT POWER	L-40-105
									2 #8 >> POLE LIGHT & RECEPTACLE POWER	L-40-105
L-90-116	90E03	1"	3	#6	XHHW-2	1	#8	XHHW-2	FR: J-BOX	
									TO: LP-2	
									3 #6 >> GEN-90-1 POWER	L-90-150
L-90-140	90E05	2"	3	#6	XHHW-2	1	#8	XHHW-2	FR: GEN-90-1	L-90-150
									TO: J-BOX	
									3 #6 >> GEN-90-1 POWER	
L-90-145	90E05	2"	2	#10	XHHW-2	1	#10	XHHW-2	FR: VCP-90-1	L-90-150
									TO: J-BOX	
									2 #10 >> VCP-90-1 POWER	
L-90-150	90E05	2"	3	#6	XHHW-2	1	#8	XHHW-2	FR: J-BOX	L-90-111
	90E02		2	#10	XHHW-2				TO: J-BOX	
									2 #10 >> VCP-90-1 POWER	L-90-145
									3 #6 >> GEN-90-1 POWER	L-90-140
L-90-155	90E05	2"	2	#10	XHHW-2	1	#10	XHHW-2	FR: VCP-90-5	
	90E02								TO: LP-1	
									2 #10 >> VCP-90-5 POWER	
L-90-165	90E02	0.75"	2	#10	XHHW-2	1	#10	XHHW-2	FR: CU-3	
									TO: LP-2	
									2 #10 >> CU-3 POWER	
L-90-166	90E02	0.75"	2	#8	XHHW-2	1	#10	XHHW-2	FR: AC-3	
									TO: LP-2	
									2 #8 >> AC-3 POWER	
L-90-175	90E03	0.75"	2	#12	XHHW-2	1	#12	XHHW-2	FR: AIT-70-1	
									TO: LP-1	
									2 #12 >> AIT-70-1 POWER	
L-90-201	10E01	2"	2	#10	XHHW-2	1	#10	XHHW-2	FR: POLE LIGHT	
									TO: POLE LIGHT	
									2 #10 >> POLE LIGHT POWER	
L-90-203	10E01	2"	2	#10	XHHW-2	1	#10	XHHW-2	FR: POLE LIGHT	L-90-206
									TO: EHH-1	
									2 #10 >> POLE LIGHT POWER	
L-90-205	10E01	2"	2	#12	XHHW-2	1	#12	XHHW-2	FR: POLE LIGHT	L-90-206
	10E02								TO: J-BOX	
									2 #12 >> POLE LIGHT POWER	
L-90-206	10E02	0.75"	2	#10	XHHW-2	1	#10	XHHW-2	FR: J-BOX	L-90-207
			2	#12	XHHW-2				TO: EHH-1	
									2 #10 >> POLE LIGHT POWER	L-90-203
									2 #12 >> POLE LIGHT POWER	L-90-205
L-90-207	02E01	2"	2	#10	XHHW-2	1	#10	XHHW-2	FR: EHH-1	
	90E02		2	#12	XHHW-2				TO: LP-2	
									2 #10 >> POLE LIGHT POWER	L-90-206
									2 #12 >> POLE LIGHT POWER	L-90-206
L-90-211	10E01	2"	2	#10	XHHW-2	1	#10	XHHW-2	FR: POLE LIGHT	
									TO: POLE LIGHT	
									2 #10 >> POLE LIGHT POWER	
L-90-212	10E01	2"	2	#10	XHHW-2	1	#10	XHHW-2	FR: POLE LIGHT	L-90-215
									TO: EHH-2	
									2 #10 >> POLE LIGHT POWER	
L-90-215	02E02	2"	2	#10	XHHW-2	1	#10	XHHW-2	FR: EHH-2	
	90E02								TO: LP-2	
									2 #10 >> POLE LIGHT POWER	L-90-212
L-90-322	90E03	1.5"	4	#3	XHHW-2	1	#8	XHHW-2	FR: LP-1	
									TO: XFMR-1	
									4 #3 >> LP-1 POWER	
L-90-324	90E03	1.5"	4	#3	XHHW-2	1	#8	XHHW-2	FR: LP-2	
									TO: XFMR-1	
									4 #3 >> LP-2 POWER	

CONDUIT SCHEDULE AREA 90

GIBSON OAKS WATER PRODUCTION FACILITY

ELECTRICAL ROOM

ENGINEER	KTW
REVISION	0
DATE	7/20/20

CONDUIT			CONDUCTORS			GROUND				
NUMBER	DWG	SIZE	#	SIZE	TYPE	#	SIZE	TYPE	DESCRIPTION	CONNECTING SEGMENTS
M-90-001	02E01	2"	1	PULL	ROPE				FR: UTILITY POLE	
									TO: UTILITY CABLE SECTIONALIZER	
									1 PULL >> CONDUIT FOR UTILITY CABLE	
M-90-002	02E01	2"	1	PULL	ROPE				FR: UTILITY POLE	
									TO: UTILITY CABLE SECTIONALIZER	
									1 PULL >> CONDUIT FOR UTILITY CABLE	
M-90-003	02E01	2"	1	PULL	ROPE				FR: UTILITY POLE	
									TO: UTILITY CABLE SECTIONALIZER	
									1 PULL >> CONDUIT FOR UTILITY CABLE	
M-90-004	02E01	2"	1	PULL	ROPE				FR: UTILITY POLE	
									TO: UTILITY CABLE SECTIONALIZER	
									1 PULL >> CONDUIT FOR UTILITY CABLE	
M-90-011	02E01	2"	1	PULL	ROPE				FR: UTILITY CABLE SECTIONALIZER	
									TO: XFMR-UTIL	
									1 PULL >> CONDUIT FOR UTILITY CABLE	
M-90-012	02E01	2"	1	PULL	ROPE				FR: UTILITY CABLE SECTIONALIZER	
									TO: XFMR-UTIL	
									1 PULL >> CONDUIT FOR UTILITY CABLE	
M-90-013	02E01	2"	1	PULL	ROPE				FR: UTILITY CABLE SECTIONALIZER	
									TO: XFMR-UTIL	
									1 PULL >> CONDUIT FOR UTILITY CABLE	
M-90-014	02E01	2"	1	PULL	ROPE				FR: UTILITY CABLE SECTIONALIZER	
									TO: XFMR-UTIL	
									1 PULL >> CONDUIT FOR UTILITY CABLE	
N-90-111	90E03	0.75"	1		CAT6	1	#14	XHHW-2	FR: VFD-52-1	N-90-113
									TO: CONDUIT TEE	
									1 CAT6 >> VFD-52-1 NETWORK	
N-90-112	90E03	0.75"	1		CAT6	1	#14	XHHW-2	FR: VFD-54-3	N-90-113
									TO: CONDUIT TEE	
									1 CAT6 >> VFD-54-3 NETWORK	
N-90-113	90E03	1"	2		CAT6	1	#14	XHHW-2	FR: CONDUIT TEE	N-90-115
									TO: CONDUIT TEE	
									1 CAT6 >> VFD-54-3 NETWORK	N-90-112
									1 CAT6 >> VFD-52-1 NETWORK	N-90-111
N-90-114	90E03	0.75"	1		CAT6	1	#14	XHHW-2	FR: VFD-54-1	N-90-115
									TO: CONDUIT TEE	
									1 CAT6 >> VFD-54-1 NETWORK	
N-90-115	90E03	1"	3		CAT6	1	#14	XHHW-2	FR: CONDUIT TEE	
									TO: PCM-1-1	
									1 CAT6 >> VFD-54-1 NETWORK	N-90-114
									1 CAT6 >> VFD-54-3 NETWORK	N-90-113
									1 CAT6 >> VFD-52-1 NETWORK	N-90-113
N-90-117	90E03	0.75"	1		CAT6	1	#14	XHHW-2	FR: VFD-52-2	N-90-120
									TO: CONDUIT TEE	
									1 CAT6 >> VFD-52-2 NETWORK	
N-90-118	90E03	0.75"	1		CAT6	1	#14	XHHW-2	FR: VFD-54-2	N-90-120
									TO: CONDUIT TEE	
									1 CAT6 >> VFD-54-2 NETWORK	
N-90-120	90E03	1"	2		CAT6	1	#14	XHHW-2	FR: CONDUIT TEE	
									TO: PCM-1-1	
									1 CAT6 >> VFD-54-2 NETWORK	N-90-118
									1 CAT6 >> VFD-52-2 NETWORK	N-90-117
N-90-131	90E03	0.75"	1		CAT6	1	#14	XHHW-2	FR: SWBD-1	N-90-133
									TO: CONDUIT TEE	
									1 CAT6 >> SWBD-1 NETWORK	
N-90-132	90E03	0.75"	1		CAT6	1	#14	XHHW-2	FR: ATS-90-1	N-90-133
									TO: CONDUIT TEE	
									1 CAT6 >> ATS-90-1 NETWORK	
N-90-133	90E03	1"	2		CAT6	1	#14	XHHW-2	FR: CONDUIT TEE	N-90-136
									TO: CONDUIT TEE	
									1 CAT6 >> ATS-90-1 NETWORK	N-90-132
									1 CAT6 >> SWBD-1 NETWORK	N-90-131

CONDUIT SCHEDULE AREA 90

GIBSON OAKS WATER PRODUCTION FACILITY

ELECTRICAL ROOM

ENGINEER	KTW
REVISION	0
DATE	7/20/20

CONDUIT			**CONDUCTORS**			**GROUND**				
NUMBER	**DWG**	**SIZE**	**#**	**SIZE**	**TYPE**	**#**	**SIZE**	**TYPE**	**DESCRIPTION**	**CONNECTING SEGMENTS**
N-90-135	90E03	0.75"	1		CAT6	1	#14	XHHW-2	FR: MCC-2	N-90-136
									TO: CONDUIT TEE	
									1 CAT6 >> MCC-2 NETWORK	
N-90-136	90E03	1"	3		CAT6	1	#14	XHHW-2	FR: CONDUIT TEE	N-90-139
									TO: CONDUIT TEE	
									1 CAT6 >> MCC-2 NETWORK	N-90-135
									1 CAT6 >> ATS-90-1 NETWORK	N-90-133
									1 CAT6 >> SWBD-1 NETWORK	N-90-133
N-90-137	90E03	0.75"	1		CAT6	1	#14	XHHW-2	FR: MCC-1	N-90-139
									TO: CONDUIT TEE	
									1 CAT6 >> MCC-1 NETWORK	
N-90-139	90E03	1.5"	4		CAT6	1	#14	XHHW-2	FR: CONDUIT TEE	
									TO: PCM-1-1	
									1 CAT6 >> MCC-1 NETWORK	N-90-137
									1 CAT6 >> MCC-2 NETWORK	N-90-136
									1 CAT6 >> ATS-90-1 NETWORK	N-90-136
									1 CAT6 >> SWBD-1 NETWORK	N-90-136
N-90-140	90E02	2"	1		RS-485	1	#14	XHHW-2	FR: GEN-90-1	
									TO: PCM-1-1	
									1 RS-485 >> GEN-90-1 NETWORK	
N-90-201	10E01	2"	1		CAT6	1	#14	XHHW-2	FR: SECURITY CAMERA	N-90-202
	10E02								TO: J-BOX	
									1 CAT6 >> SECURITY CAMERA NETWORK	
N-90-202	10E02	2"	2		CAT6	1	#14	XHHW-2	FR: J-BOX	N-90-203
									TO: EHH-1	
									1 CAT6 >> SECURITY CAMERA NETWORK	N-90-221
									1 CAT6 >> SECURITY CAMERA NETWORK	N-90-201
N-90-203	90E02	2"	2		CAT6	1	#14	XHHW-2	FR: EHH-1	
									TO: PCM-1-1	
									1 CAT6 >> SECURITY CAMERA NETWORK	N-90-202
									1 CAT6 >> SECURITY CAMERA NETWORK	N-90-202
N-90-212	10E01	2"	1		CAT6	1	#14	XHHW-2	FR: SECURITY CAMERA	N-90-215
									TO: EHH-2	
									1 CAT6 >> SECURITY CAMERA NETWORK	
N-90-215	90E02	2"	1		CAT6	1	#14	XHHW-2	FR: EHH-2	
									TO: PCM-1-1	
									1 CAT6 >> SECURITY CAMERA NETWORK	N-90-212
N-90-221	10E01	2"	1		CAT6	1	#14	XHHW-2	FR: SECURITY CAMERA	N-90-202
	10E02								TO: J-BOX	
									1 CAT6 >> SECURITY CAMERA NETWORK	
P-90-001	90E02	3"	3	500	XHHW-2	1	#1/0	XHHW-2	FR: ATS-90-1	
			1	#1/0	XHHW-2				TO: XFMR-UTIL (VIA METERING CABINET)	
									3 500 >> ATS-90-1 POWER	
									1 #1/0 >> SERVICE NEUTRAL CONDUCTOR	
P-90-002	90E02	3"	3	500	XHHW-2	1	#1/0	XHHW-2	FR: ATS-90-1	
			1	#1/0	XHHW-2				TO: XFMR-UTIL (VIA METERING CABINET)	
									3 500 >> ATS-90-1 POWER	
									1 #1/0 >> SERVICE NEUTRAL CONDUCTOR	
P-90-003	90E02	3"	3	500	XHHW-2	1	#1/0	XHHW-2	FR: ATS-90-1	
			1	#1/0	XHHW-2				TO: XFMR-UTIL (VIA METERING CABINET)	
									3 500 >> ATS-90-1 POWER	
									1 #1/0 >> SERVICE NEUTRAL CONDUCTOR	
P-90-004	90E02	3"	3	500	XHHW-2	1	#1/0	XHHW-2	FR: ATS-90-1	
			1	#1/0	XHHW-2				TO: XFMR-UTIL (VIA METERING CABINET)	
									3 500 >> ATS-90-1 POWER	
									1 #1/0 >> SERVICE NEUTRAL CONDUCTOR	
P-90-005	90E02	3"	3	500	XHHW-2	1	#1/0	XHHW-2	FR: ATS-90-1	
			1	#1/0	XHHW-2				TO: XFMR-UTIL (VIA METERING CABINET)	
									3 500 >> ATS-90-1 POWER	
									1 #1/0 >> SERVICE NEUTRAL CONDUCTOR	
P-90-006	90E02	3"	3	500	XHHW-2	1	#1/0	XHHW-2	FR: ATS-90-1	
			1	#1/0	XHHW-2				TO: XFMR-UTIL (VIA METERING CABINET)	
									3 500 >> ATS-90-1 POWER	
									1 #1/0 >> SERVICE NEUTRAL CONDUCTOR	

CONDUIT SCHEDULE AREA 90

GIBSON OAKS WATER PRODUCTION FACILITY

ELECTRICAL ROOM

ENGINEER	**KTW**
REVISION	**0**
DATE	7/20/20

CONDUIT			CONDUCTORS			GROUND				
NUMBER	**DWG**	**SIZE**	**#**	**SIZE**	**TYPE**	**#**	**SIZE**	**TYPE**	**DESCRIPTION**	**CONNECTING SEGMENTS**
P-90-051	90E02	3"	3	500	XHHW-2	1	#1/0	XHHW-2	FR: ATS-90-1 TO: GEN-90-1 3 500 >> ATS-90-1 POWER	
P-90-052	90E02	3"	3	500	XHHW-2	1	#1/0	XHHW-2	FR: ATS-90-1 TO: GEN-90-1 3 500 >> ATS-90-1 POWER	
P-90-053	90E02	3"	3	500	XHHW-2	1	#1/0	XHHW-2	FR: ATS-90-1 TO: GEN-90-1 3 500 >> ATS-90-1 POWER	
P-90-054	90E02	3"	3	500	XHHW-2	1	#1/0	XHHW-2	FR: ATS-90-1 TO: GEN-90-1 3 500 >> ATS-90-1 POWER	
P-90-055	90E02	3"	3	500	XHHW-2	1	#1/0	XHHW-2	FR: ATS-90-1 TO: GEN-90-1 3 500 >> ATS-90-1 POWER	
P-90-101	90E03	3"	3	350	XHHW-2	1	#4/0	XHHW-2	FR: SWBD-1 TO: ATS-90-1 3 350 >> SWBD-1 POWER	
P-90-102	90E03	3"	3	350	XHHW-2	1	#4/0	XHHW-2	FR: SWBD-1 TO: ATS-90-1 3 350 >> SWBD-1 POWER	
P-90-103	90E03	3"	3	350	XHHW-2	1	#4/0	XHHW-2	FR: SWBD-1 TO: ATS-90-1 3 350 >> SWBD-1 POWER	
P-90-104	90E03	3"	3	350	XHHW-2	1	#4/0	XHHW-2	FR: SWBD-1 TO: ATS-90-1 3 350 >> SWBD-1 POWER	
P-90-105	90E03	3"	3	350	XHHW-2	1	#4/0	XHHW-2	FR: SWBD-1 TO: ATS-90-1 3 350 >> SWBD-1 POWER	
P-90-106	90E03	3"	3	350	XHHW-2	1	#4/0	XHHW-2	FR: SWBD-1 TO: ATS-90-1 3 350 >> SWBD-1 POWER	
P-90-111	90E02	3"	3	500	XHHW-2	1	#4/0	XHHW-2	FR: SWBD-1 TO: GEN CONNECTION CABINET 3 500 >> SWBD-1 POWER	
P-90-112	90E02	3"	3	500	XHHW-2	1	#4/0	XHHW-2	FR: SWBD-1 TO: GEN CONNECTION CABINET 3 500 >> SWBD-1 POWER	
P-90-113	90E02	3"	3	500	XHHW-2	1	#4/0	XHHW-2	FR: SWBD-1 TO: GEN CONNECTION CABINET 3 500 >> SWBD-1 POWER	
P-90-114	90E02	3"	3	500	XHHW-2	1	#4/0	XHHW-2	FR: SWBD-1 TO: GEN CONNECTION CABINET 3 500 >> SWBD-1 POWER	
P-90-115	90E02	3"	3	500	XHHW-2	1	#4/0	XHHW-2	FR: SWBD-1 TO: GEN CONNECTION CABINET 3 500 >> SWBD-1 POWER	
P-90-116	90E02	3"	3	500	XHHW-2	1	#4/0	XHHW-2	FR: SWBD-1 TO: GEN CONNECTION CABINET 3 500 >> SWBD-1 POWER	
P-90-151	90E02	3"	3	400	XHHW-2	1	#2/0	XHHW-2	FR: MCC-1 TO: SWBD-1 3 400 >> MCC-1 POWER	
P-90-152	90E02	3"	3	400	XHHW-2	1	#2/0	XHHW-2	FR: MCC-1 TO: SWBD-1 3 400 >> MCC-1 POWER	
P-90-153	90E02	3"	3	400	XHHW-2	1	#2/0	XHHW-2	FR: MCC-1 TO: SWBD-1 3 400 >> MCC-1 POWER	
P-90-161	90E02	0.75"	3	#10	XHHW-2	1	#10	XHHW-2	FR: CU-1 TO: MCC-1 3 #10 >> CU-1 POWER	

CONDUIT SCHEDULE AREA 90

GIBSON OAKS WATER PRODUCTION FACILITY

ELECTRICAL ROOM

ENGINEER	**KTW**
REVISION	**0**
DATE	7/20/20

CONDUIT			**CONDUCTORS**			**GROUND**				
NUMBER	**DWG**	**SIZE**	**#**	**SIZE**	**TYPE**	**#**	**SIZE**	**TYPE**	**DESCRIPTION**	**CONNECTING SEGMENTS**
P-90-162	90E02	0.75"	3	#10	XHHW-2	1	#10	XHHW-2	FR: CU-2 TO: MCC-2 3 #10 >> CU-2 POWER	
P-90-165	90E02	0.75"	3	#8	XHHW-2	1	#10	XHHW-2	FR: AC-1 TO: MCC-1 3 #8 >> AC-1 POWER	
P-90-166	90E02	0.75"	3	#8	XHHW-2	1	#10	XHHW-2	FR: AC-2 TO: MCC-2 3 #8 >> AC-2 POWER	
P-90-190	90E02	2"	2	#1/0	XHHW-2	1	#6	XHHW-2	FR: EHH-2 TO: MCC-2 2 #1/0 >> XFMR-3 POWER	P-90-191
P-90-191	90E02	2"	2	#1/0	XHHW-2	1	#6	XHHW-2	FR: XFMR-3 TO: EHH-2 2 #1/0 >> XFMR-3 POWER	P-90-190
P-90-201	02E02 10E02	2"	3	#12	XHHW-2	1	#12	XHHW-2	FR: FRONT GATE OPERATOR TO: J-BOX 3 #12 >> FRONT GATE OPERATOR POWER	P-90-202
P-90-202	10E02	2"	3	#12	XHHW-2	1	#12	XHHW-2	FR: J-BOX TO: EHH-1 3 #12 >> FRONT GATE OPERATOR POWER	P-90-203 P-90-201
P-90-203	90E02	2"	3	#12	XHHW-2	1	#12	XHHW-2	FR: EHH-1 TO: MCC-2 3 #12 >> FRONT GATE OPERATOR POWER	P-90-202
P-90-251	90E02	3"	3	400	XHHW-2	1	#2/0	XHHW-2	FR: MCC-2 TO: SWBD-1 3 400 >> MCC-2 POWER	
P-90-252	90E02	3"	3	400	XHHW-2	1	#2/0	XHHW-2	FR: MCC-2 TO: SWBD-1 3 400 >> MCC-2 POWER	
P-90-253	90E02	3"	3	400	XHHW-2	1	#2/0	XHHW-2	FR: MCC-2 TO: SWBD-1 3 400 >> MCC-2 POWER	
P-90-301	90E03	2"	3	#3/0	XHHW-2	1	#3	XHHW-2	FR: VFD-54-1 TO: MCC-1 3 #3/0 >> VFD-54-1 POWER	
P-90-302	90E03	2"	3	#3/0	XHHW-2	1	#3	XHHW-2	FR: VFD-54-1 TO: MCC-1 3 #3/0 >> VFD-54-1 POWER	
P-90-303	90E03	2"	3	#3/0	XHHW-2	1	#3	XHHW-2	FR: VFD-54-3 TO: MCC-1 3 #3/0 >> VFD-54-3 POWER	
P-90-304	90E03	2"	3	#3/0	XHHW-2	1	#3	XHHW-2	FR: VFD-54-3 TO: MCC-1 3 #3/0 >> VFD-54-3 POWER	
P-90-307	90E03	2"	3	#3/0	XHHW-2	1	#6	XHHW-2	FR: VFD-52-1 TO: MCC-1 3 #3/0 >> VFD-52-1 POWER	
P-90-311	90E03	2"	3	#4/0	XHHW-2	1	#4	XHHW-2	FR: ATS-90-2 TO: MCC-1 3 #4/0 >> ATS-90-2 POWER	
P-90-320	90E03	2"	3	#4/0	XHHW-2	1	#4	XHHW-2	FR: XFMR-1 TO: ATS-90-2 3 #4/0 >> XFMR-1 POWER	
P-90-401	90E03	2"	3	#3/0	XHHW-2	1	#3	XHHW-2	FR: VFD-54-2 TO: MCC-2 3 #3/0 >> VFD-54-2 POWER	
P-90-402	90E03	2"	3	#3/0	XHHW-2	1	#3	XHHW-2	FR: VFD-54-2 TO: MCC-2 3 #3/0 >> VFD-54-2 POWER	
P-90-407	90E03	2"	3	#3/0	XHHW-2	1	#6	XHHW-2	FR: VFD-52-2 TO: MCC-2 3 #3/0 >> VFD-52-2 POWER	

CONDUIT SCHEDULE AREA 90

GIBSON OAKS WATER PRODUCTION FACILITY

ELECTRICAL ROOM

ENGINEER	**KTW**
REVISION	**0**
DATE	7/20/20

CONDUIT			**CONDUCTORS**			**GROUND**				
NUMBER	**DWG**	**SIZE**	**#**	**SIZE**	**TYPE**	**#**	**SIZE**	**TYPE**	**DESCRIPTION**	**CONNECTING SEGMENTS**
P-90-411	90E03	2"	3	#4/0	XHHW-2	1	#4	XHHW-2	FR: ATS-90-2	
									TO: MCC-2	
									3 #4/0 >> ATS-90-2 POWER	
S-90-111	90E03	0.75"	2	2/CS-#16		1	#14	XHHW-2	FR: VFD-52-1	S-90-113
									TO: CONDUIT TEE	
									2 2/CS-#16 >> VFD-52-1 SIGNAL	
S-90-112	90E03	0.75"	2	2/CS-#16		1	#14	XHHW-2	FR: VFD-54-3	S-90-113
									TO: CONDUIT TEE	
									2 2/CS-#16 >> VFD-54-3 SIGNAL	
S-90-113	90E03	1"	4	2/CS-#16		1	#14	XHHW-2	FR: CONDUIT TEE	S-90-115
									TO: CONDUIT TEE	
									2 2/CS-#16 >> VFD-54-3 SIGNAL	S-90-112
									2 2/CS-#16 >> VFD-52-1 SIGNAL	S-90-111
S-90-114	90E03	0.75"	2	2/CS-#16		1	#14	XHHW-2	FR: VFD-54-1	S-90-115
									TO: CONDUIT TEE	
									2 2/CS-#16 >> VFD-54-1 SIGNAL	
S-90-115	90E03	1.5"	6	2/CS-#16		1	#14	XHHW-2	FR: CONDUIT TEE	
									TO: PCM-1-1	
									2 2/CS-#16 >> VFD-54-1 SIGNAL	S-90-114
									2 2/CS-#16 >> VFD-54-3 SIGNAL	S-90-113
									2 2/CS-#16 >> VFD-52-1 SIGNAL	S-90-113
S-90-117	90E03	0.75"	2	2/CS-#16		1	#14	XHHW-2	FR: VFD-52-2	S-90-120
									TO: CONDUIT TEE	
									2 2/CS-#16 >> VFD-52-2 SIGNAL	
S-90-118	90E03	0.75"	2	2/CS-#16		1	#14	XHHW-2	FR: VFD-54-2	S-90-120
									TO: CONDUIT TEE	
									2 2/CS-#16 >> VFD-54-2 SIGNAL	
S-90-120	90E03	1"	4	2/CS-#16		1	#14	XHHW-2	FR: CONDUIT TEE	
									TO: PCM-1-1	
									2 2/CS-#16 >> VFD-54-2 SIGNAL	S-90-118
									2 2/CS-#16 >> VFD-52-2 SIGNAL	S-90-117
S-90-140	90E05	2"	2	2/CS-#16		1	#14	XHHW-2	FR: GEN-90-1	S-90-150
									TO: J-BOX	
									2 2/CS-#16 >> GEN-90-1 SIGNAL	
S-90-145	90E05	2"	1	2/CS-#16		1	#14	XHHW-2	FR: VCP-90-1	S-90-150
									TO: J-BOX	
									1 2/CS-#16 >> VCP-90-1 SIGNAL	
S-90-150	90E05	2"	3	2/CS-#16		1	#14	XHHW-2	FR: J-BOX	
	90E02								TO: PCM-1-1	
									1 2/CS-#16 >> VCP-90-1 SIGNAL	S-90-145
									2 2/CS-#16 >> GEN-90-1 SIGNAL	S-90-140
S-90-170	90E01	0.75"	1	MFR	CABLE	1	#14	XHHW-2	FR: AE-70-1	
									TO: AIT-70-1	
									1 MFR >> AE-70-1 SIGNAL	
S-90-175	90E01	0.75"	2	2/CS-#16		1	#14	XHHW-2	FR: AIT-70-1	
									TO: PCM-1-1	
									2 2/CS-#16 >> AIT-70-1 SIGNAL	
X-90-051	90E02	3"	1	PULL	ROPE				FR: ATS-90-1	
									TO: GEN-90-1	
									1 PULL >> SPARE	
X-90-190	90E02	2"	1	PULL	ROPE				FR: EHH-2	
									TO: MCC-2	
									1 PULL >> SPARE	
X-90-191	90E02	2"	1	PULL	ROPE				FR: EHH-2	
									TO: MCC-1	
									1 PULL >> SPARE	
X-90-192	02E02	2"	1	PULL	ROPE				FR: POLE BARN STUB-UP	
									TO: EHH-2	
									1 PULL >> SPARE	
X-90-193	02E02	2"	1	PULL	ROPE				FR: POLE BARN STUB-UP	
									TO: EHH-2	
									1 PULL >> SPARE	

CONDUIT SCHEDULE AREA 90

GIBSON OAKS WATER PRODUCTION FACILITY

ELECTRICAL ROOM

ENGINEER KTW

REVISION 0

DATE 7/20/20

CONDUIT			CONDUCTORS			GROUND				
NUMBER	DWG	SIZE	#	SIZE	TYPE	#	SIZE	TYPE	DESCRIPTION	CONNECTING SEGMENTS

END OF CONDUIT SCHEDULE

END OF SECTION

SECTION 17050

COMMON WORK RESULTS FOR PROCESS CONTROL AND INSTRUMENTATION SYSTEMS

PART 1 GENERAL

1.01 SUMMARY

A. Section includes:
   1. General requirements applicable to all Process Control and Instrumentation Work.
   2. General requirements for process control and instrumentation submittals.

B. Interfaces to equipment, instruments, and other components:
   1. Drawings, Specifications, and overall design are based on preliminary information furnished by various equipment manufacturers, which identify a minimum scope of supply from the manufacturers. This information pertains to, but is not limited to, instruments, control devices, electrical equipment, packaged mechanical systems, and control equipment provided with mechanical systems.
   2. Provide all material and labor needed to install the actual equipment furnished, include all costs to add any additional instruments, wiring, control system inputs/outputs, controls, interlocks, electrical hardware etc., which may be necessary to make a complete, functional installation based on the actual equipment furnished:
      a. Make all changes necessary to meet the manufacturer’s wiring requirements.
   3. Submit all such changes and additions to the Engineer for acceptance as specified in the General Conditions.
   4. Review the complete set of Drawings and Specifications in order to ensure that all items related to the instrumentation and control systems are completely accounted for. Include any items indicated on the Drawings or in Specifications from another discipline in the scope of Work:
      a. If a conflict between Drawings and Specifications is discovered, refer conflict to the Engineer as soon as possible for resolution.
   5. Loop drawings:
      a. Provide complete loop drawings for all systems, including packaged equipment furnished as part of a vendor furnished package, and for all pre-purchased equipment.
      b. The form, minimum level of detail, and format for the loop drawings must match that of the sample loop drawings included in the Contract Documents.
      c. The Owner and Engineer are not responsible for providing detailed loop diagrams for Contractor furnished equipment.

C. All instrumentation, and control equipment and systems for the entire project to comply with the requirements specified in the Instrumentation and Control Specifications, whether referenced in the individual Equipment Specifications or not:
   1. The requirements of the Instrumentation and Control Specifications apply to all Instrumentation and Control Work specified in other Specifications, including packaged mechanical systems, LCPs, VCPs, etc.
   2. Inform all vendors supplying instrumentation, control systems, panels, and/or equipment of the requirements of the Instrumentation and Control Specifications.

D. Refer to Chapter 7, SCADA, of the Polk County utilities code for Owner specific requirements. The latest version of the utilities code can be found online on the Polk County Utilities website.

E. Special subcontractor requirements:
   1. Instrumentation and Control System Subcontractor must be approved by the Owner. The following Instrumentation and Control System Subcontractors have been pre-approved:
      a. Curry Controls.
      b. J H Ham Engineering.
      c. CEC Controls.
   2. Integrators not listed above must receive written pre-approval by the Owner during bidding.

F. Contract Documents:
   1. General:
      a. The drawings and specifications are complementary and are to be used together in order to fully describe the Work.
   2. Specifications:
      a. General Conditions and Supplementary Conditions of the Contract Documents govern the Work.
      b. These requirements are in addition to all General Requirements.
   3. Contract drawings:
      a. The Instrumentation and Control Drawings show in a diagrammatic manner, the desired locations, and arrangements of the components of the Instrumentation Work. Follow the drawings as closely as possible, use professional judgment and coordinate with the other trades to secure the best possible installation, use the entire drawing set for construction purposes.
      b. Locations of equipment, control devices, instruments, boxes, panels, etc. are approximate only, exercise professional judgment in executing the Work to ensure the best possible installation:
         1) The equipment locations and dimensions indicated on the Drawings and elevations are approximate. Use the shop drawings to determine the proper layout, foundation, and pad requirements, etc. for final installation. Coordinate with all subcontractors to ensure that all instrumentation and control equipment is compatible with other equipment and space requirements. Make changes required to accommodate differences in equipment dimensions.

        2) The Contractor has the freedom to select any of the named manufacturers as identified in the individual Specifications; however, the Engineer has designed the spatial equipment layout based upon a single manufacturer and has not confirmed that every named manufacturer's equipment fits in the allotted space. It is the Contractor's responsibility to ensure that the equipment being furnished fits within the defined space.
    c. Installation details:
        1) The Contract Drawings include installation details showing means and methods for installing instrumentation and control equipment. For cases where typical details are not provided or compatible with an installed location, develop installation details that are necessary for completing the Work, and submit these details for review by the Engineer.
    d. Schematic diagrams:
        1) All controls are shown de-energized.
        2) Schematic diagrams show control function only. Incorporate other necessary functions for proper operation and protection of the system.
        3) Add slave relays, where required, to provide all necessary contacts for the control system or where needed to function as interposing relays for control voltage coordination, equipment coordination, or control system voltage drop considerations.
        4) Mount all devices shown on motor controller schematic diagrams in the controller compartment enclosure, unless otherwise noted or indicated.
        5) Control schematics are to be used as a guide in conjunction with the descriptive operating sequences indicated on the Drawings or in the Specifications. Combine all information and furnish a coordinated and fully functional control system.

G. Alternates/Alternatives:
  1. Substitute item provisions as specified in the General Conditions.

H. Changes and change orders:
  1. As specified in Section 01600 - Product Requirements.

1.02 REFERENCES

A. Code compliance:
  1. The publications are referred to in the text by basic designation only. The latest edition accepted by the Authority Having Jurisdiction of referenced publications in effect at the time of Bid governs.
  2. The following codes and standards are hereby incorporated into this Section:
    a. American National Standards Institute (ANSI).
    b. American Petroleum Institute (API):
        1) RP 550 - Manual on Installation of Refinery Instruments and Control Systems; Part II-Process Stream Analyzers; Section 5-Oxygen Analyzers.
        2) RP 551 - Process Measurement Instrumentation.
    c. International Organization for Standardization (ISO):
        1) 9001 - Quality Management Systems - Requirements.

        - d. International Society of Automation (ISA):
            - 1) 5.1 - Instrumentation Symbols and Identification.
            - 2) 5.4 - Instrument Loop Diagrams.
            - 3) 20 - Specification Forms for Process Measurement and Control Instruments, Primary Elements, and Control Valves.
        - e. National Electrical Manufacturers Association (NEMA):
            - 1) 250 - Enclosures for Electrical Equipment (1000 V Maximum).
        - f. National Fire Protection Association (NFPA).
        - g. National Institute of Standards and Technology (NIST).
        - h. Underwriters Laboratories, Inc. (UL):
            - 1) 508 - Standard of Safety for Industrial Control Equipment.
            - 2) 508A - Standard of Safety for Industrial Control Panels.

- B. Compliance with Laws and Regulations:
    - 1. As specified in the General Conditions.

1.03 DEFINITIONS

- A. Definitions of terms and other electrical and instrumentation considerations in accordance with:
    - 1. Factory Mutual (FM).
    - 2. International Electrotechnical Commission (IEC).
    - 3. Institute of Electrical and Electronics Engineers (IEEE).
    - 4. International Society of Automation (ISA).
    - 5. International Organization for Standardization (ISO).
    - 6. National Electrical Code (NEC).
    - 7. National Electrical Manufacturers Association (NEMA).
    - 8. InterNational Electrical Testing Association (NETA).
    - 9. National Fire Protection Association (NFPA).
    - 10. National Institute of Standards and Technology (NIST).
    - 11. Underwriters Laboratories (UL).

- B. Specific definitions:
    - 1. Control circuit: Any circuit operating at 120 volts alternating current (VAC) or direct current (VDC) or less, whose principal purpose is the conveyance of information (including performing logic) and not the conveyance of energy for the operation of an electrically powered device.
    - 2. Panel: An instrument support system that may be a flat surface, a partial enclosure, or a complete enclosure for instruments and other devices used in process control systems.
    - 3. Power circuit: Any circuit operating at 90 volts (AC or DC) or more, whose principal purpose is the conveyance of energy for the operation of an electrically powered device.
    - 4. Signal circuit: Any circuit operating at less than 50 VAC or VDC, which conveys analog information or digital communications information.
    - 5. Digital bus: A communication network, such as PROFIBUS, Foundation Fieldbus, or DeviceNet, allowing instruments and devices to transmit data, control functions, and diagnostic information.

6. 2-Wire transmitter (loop powered): A transmitter that derives its operating power supply from the signal transmission circuit and requires no separate power supply connections. As used in this Section, 2-wire transmitter refers to a transmitter that provides a signal such as 4 to 20 mA 24VDC regulation of a signal in a series circuit with an external 24 VDC driving potential:
   a. Fieldbus communications signal or both.
7. Powered transmitters: A transmitter that requires a separate power source (120 VAC, 240 VAC, etc.) in order for the transmitter to develop its signal. As used in this Section, the produced signal may be a 4 to 20 mA 24VDC signal, a digital bus communications signal, or both.
8. System supplier - As specified in ICSC Qualifications in the Quality Assurance article of this Section.

C. NEMA:
   1. Type 1 enclosure in accordance with NEMA 250.
   2. Type 2 enclosure in accordance with NEMA 250.
   3. Type 3 enclosure in accordance with NEMA 250.
   4. Type 3R enclosure in accordance with NEMA 250.
   5. Type 3S enclosure in accordance with NEMA 250.
   6. Type 3X enclosure in accordance with NEMA 250.
   7. Type 3RX enclosure in accordance with NEMA 250.
   8. Type 3SX enclosure in accordance with NEMA 250.
   9. Type 4 enclosure in accordance with NEMA 250.
   10. Type 4X enclosure in accordance with NEMA 250.
   11. Type 5 enclosure in accordance with NEMA 250.
   12. Type 6 enclosure in accordance with NEMA 250.
   13. Type 6P enclosure in accordance with NEMA 250.
   14. Type 12 enclosure in accordance with NEMA 250.
   15. Type 12K enclosure in accordance with NEMA 250.
   16. Type 13 enclosure in accordance with NEMA 250.

D. Acronym definitions:
   1. ACB: Automatic current balance.
   2. ATS: Automatic Transfer Switch.
   3. CCS: The PCS central computer system (CCS) consisting of computers and software. The personal computer-based hardware and software system that includes the operator interface, data storage, data retrieval, archiving, alarming, historian, reports, trending, and other higher-level control system software and functions.
   4. DPDT: Double-pole, double-throw.
   5. ES: Enterprise system: Computer based communications or data sharing system utilized for non-process control functions such as E-mail, sharing files, creating documents, etc.
   6. FAT: Factory acceptance test also known as Source Test.
   7. HART: Highway addressable remote transducer.
   8. HOA: Hand-Off-Auto control function that is totally PLC based. In the Hand mode, equipment is started or stopped, valves are opened or closed through operator direction under the control of the PLC software. In the Auto mode, equipment is started or stopped and valves are opened or closed through a control algorithm within the PLC software. In the Off mode, the equipment is prohibited from responding from the PLC control.

9. HMI: Human machine interface is a software application that presents information to an operator or user about the state of a process, and to accept and implement the operators control instructions. Typically information is displayed in a graphical format.
10. ICSC: Instrumentation and control system contractor: Subcontractor who specializes in the design, construction, fabrication, software development, installation, testing, and commissioning of industrial instrumentation and control systems.
11. IJB: Instrument junction boxes: A panel designed with cord sets to easily remove, replace, or relocate instrument signals.
12. I/O: Input/Output.
13. IP: Internet protocol or ingress protection.
14. LCP: Local control panel: Operator interface panel that may contain an HMI, pilot type control devices, operator interface devices, control relays, etc. and does not contain a PLC or RIO.
15. LAN: Local area network: A control or communications network that is limited to the physical boundaries of the facility.
16. LOI: Local Operator Interface is an operator interface device consisting of an alphanumeric or graphic display with operator input functionality. The LOI is typically a flat panel type of display mounted on the front of an enclosure with either a touch screen or tactile button interface.
17. LOR: Local-Off-Remote control function. In the Remote mode, equipment is started or stopped, and valves are opened or closed through the PLC based upon the selection of the HOA. In the Local mode, equipment is started or stopped, valves are opened or closed based upon hardwired control circuits completely independent of the PLC with minimum interlocks and permissive conditions. In the Off mode, the equipment is prohibited from responding to any control commands.
18. NJB: Network junction box. An enclosure that contains multiple access points to various networks within the facility. Networks could be Ethernet, Ethernet/IP, Fieldbus, RIO, etc.
19. P&ID: Process and instrumentation diagram.
20. PC: Personal computer.
21. PCIS: Process control and instrumentation system: Includes the entire instrumentation system, the entire control system, and all of the Work specified in the Instrumentation and Control Specifications and depicted on the Instrumentation Drawings. This includes all the PCS and instruments and networking components as well as the various servers, workstations, thin clients, etc.
22. PCM: Process control module: An enclosure containing any of the following devices: PLC, RTU, or RIO.
23. PCS: Process Control System: A general name for the computerized system that gathers and processes data from equipment and sensors and applies operational controls to the process equipment. It includes the PLCs and/or RIOs, LOIs, HMIs, both LCPs, VCPs and all data management systems accessible to staff.
24. PJB: Power junction box: An enclosure with terminal blocks that distribute power to multiple instruments.
25. PLC: Programmable logic controller.
26. PS: Power supply.
27. RIO: Remote I/O device for the PLC consisting of remote I/O racks, or remote I/O blocks.

28. RTU: Remote telemetry unit: A controller typically consisting of a PLC, and a means for remote communications. The remote communications devices typically are radios, modems, etc.
29. SCADA: Supervisory control and data acquisition system: A general name for the computerized system that gathers and processes data from sensors and equipment located outside of the facility, such as wells, lift stations, metering stations, etc.
30. SPDT: Single-pole, double-throw.
31. SPST: Single-pole, single-throw.
32. UPS: Uninterruptible power supply.
33. VCP: Vendor control panel: Control panels that are furnished with particular equipment by a vendor other than the ICSC. These panels may contain PLCs, RIO, LOI, HMI, etc.
34. WAN: Wide area network: A control or communications network that extends beyond the physical boundaries of the facility.

1.04 SYSTEM DESCRIPTION

A. General requirements:
   1. The Work includes everything necessary for and incidental to executing and completing the instrumentation and control system work indicated on the Drawings and specified in the Specifications and reasonably inferable there from including but not limited to:
      a. Preparing hardware submittals for field instrumentation.
      b. Design, develop, and draft loop drawings, control panel designs, and all other drawing submittals specified in the Instrumentation and Control Specifications.
      c. Prepare the test plan, the training plan, and the spare parts submittals.
      d. Procure all hardware.
      e. Provide all PCS system hardware.
      f. Owner will provide all PCS system software.
      g. Provide all PCS system programming.
      h. Fabricate panels.
      i. Perform factory tests on panels.
      j. Perform bench calibration and verify calibration after installation.
      k. Oversee and certify installation of the PCS system.
      l. Oversee, document, and certify loop testing.
      m. Oversee, document, and certify system.
      n. Installation Testing.
      o. Oversee and document Functional Testing.
      p. Conduct the Process Operational Period and the Instrumentation and Controls Process Performance Testing.
      q. Prepare operation and maintenance manuals.
      r. Conduct training classes.
      s. Integrate the PCS with instrumentation and control devices provided under other sections.
      t. Provide Record Drawings and Loop Drawings associated with Instruments and equipment:
         1) As specified in the Contract Documents.
         2) For Owner furnished items.
         3) For interfaces with existing equipment.

    u. Resolve signal, power, or functional incompatibilities between the PCS and interfacing devices.
    v. Perform all required corrective and preventative maintenance.

2. It is the intent of these Specifications that the entire electrical power, instrumentation, and control system be complete and operable. Provide all necessary material and labor for the complete system from source of power to final utilization equipment, including all connections, testing, calibration of all equipment furnished by others, as well as equipment furnished by the Contractor, whether or not specifically mentioned but which are necessary for successful operation.
3. The ICSC, will provide the configuration and programming for the PLC and PC based control system, as described below.
    a. All non-packaged PLCs will be programmed by the ICSC:
        1) PLC-1-1.
        2) PLC-2-1.
        3) PLC-3-1.
        4) Coordinate required PLC programming software platform and version with the Owner to ensure compatibility with Owner's existing systems.
    b. SCADA HMI System programming and configuration for the Gibson Oaks WPF and associated well sites.
    c. Incorporation of the Gibson Oaks WPF SCADA HMI graphics into the Owner's Master SCADA application. The Owner's Master SCADA application should be modified to add the Gibson Oaks WPF as a new WPF in the application and local Gibson Oaks WPF application should use Realm, Tag, and Alarm filtering to locally scan tags associated with the Gibson Oaks WPF. Redundancy should be setup in the application for the Master Application servers to be additional backups to the onsite servers. Coordinate remote alarm notifications, requirements and configuration with the Owner.
    d. The Owner has existing PLC programming and SCADA HMI reusable code, standard objects and widgets, and standard graphical layouts and conventions. It is the responsibility of the ICSC to become familiar with the Owner's existing standards before developing applications. All application development must be in accordance with Owner's standards.
    e. The CCS consisting of workstations and software for the SCADA HMI system.
    f. All other PLCs and other programmable devices shall be programmed by the Contractor, either directly or through the services of other entities such as subcontractors, equipment suppliers, and packaged equipment suppliers (vendors).
4. The Owner will supply miscellaneous hardware and software listed below. The software listed is for the exclusive use of the Owner and cannot be used for purposes outside of this contract. Software that the ICSC is responsible for configuring or programming will be made available for use by the Contractor. The hardware listed is for incorporation into the Plant PCS and Security systems, does not include all required PCS components, and will not be available for use in any other systems or equipment. The quantities being supplied by the Owner are limited to the quantities listed below. Owner will provide configuration of software and hardware that is provided by the Owner with the exception of VTScada HMI programming. Additional hardware and software of similar make and model shall be provided by the Contractor, as

needed to complete the PCS system and all other portions of the Work shown or specified. Owner will supply:
    a. VTScada HMI licenses for SCADA Servers; SVR-1-3 and SVR-1-4.
    b. Cellular Communications Modems; ROU-1-1, ROU-1-2, ROU-2-1,ROU-3-1.
    c. Firewalls; FWL-1, FWL-2, FWL-3.
    d. Complete local video management servers including video management software, operating system, and hardware; as shown on the drawings.
    e. Anti-virus and other general Microsoft and PCS application software for the Plant PCS system.
5. Provide enclosure for all CCTV equipment as shown on the drawings and mount equipment in enclosure in accordance with County standards.
6. Furnish detailed, complete, and thorough operations and maintenance documentation, including but not limited to operations manuals, maintenance manuals, as-built wiring drawings, training manuals, as-built software documentation, and all other documentation required to operate, modify, and maintain all parts of the PCS.
7. Provide as-built software documentation for the PLCs and computers programmed. Provide training on hardware and software items provided.
8. Revise in a manner as directed by the Engineer all I/O and addressing that the Engineer determines to be unacceptable as a result of a lack of Contractor coordination between Contract Documents and all suppliers.
9. Defective Work:
    a. As specified in the General Conditions.

B. New system**:**
1. The new Facility has four (onsite and offsite) raw water wells, ground storage tank, high service pumping, sodium hypochlorite addition, standby emergency generator system, and all related accessories. An additional raw water well will be connected in the future.
2. The new Facility will be integrated into the Owner's existing county wide VTScada HMI platform. The local SCADA servers will be provided to monitor and control the local facility only; through the use of application realm, tag, and alarm filtering controls. Integrate the facility application into the County's master HMI application.
3. The new instrumentation, control, and network installation shall match the Owner's standards and existing systems as much as possible to have standardization throughout the Utility and plant.
4. The new control system shall utilize Modicon M580 and M340 PLCs for monitoring and controlling the different processes.
5. The new PLC power supply, discrete and analog I/O modules shall be rated for 24 VDC operation.
6. Each PLC cabinet shall contain the following but not limited to, managed fiber optic Ethernet switches, fiber patch panels, and a UPS. The new PLC(s) shall communicate via the Modbus TCP communication protocol as indicated on the Contract Documents to Ethernet connected equipment.
7. The PLCs shall be programmed using the Owner's current version of the compliant programming software package. The existing HMI system shall be programmed to accommodate the new system as indicated on the Contract Documents. Utilize Owner standard function blocks and applications programming standards to the maximum extent possible for consistency across all Owner facilities.

8. The new control room shall have the following but not limited to an operator desk, managed Ethernet switches, UPS's, thin client workstations, servers, new Owner provided cellular service, video management system and Liquid Crystal Display (LCD) monitors for monitoring the local HMI system and county-wide SCADA applications on the thin client workstations.
9. A fill station alarm panel shall be provided at the sodium hypochlorite storage and feed building at the Gibson Oaks WPF location.

1.05 SUBMITTALS

A. Furnish submittals as specified in this Section.

B. General:
  1. Instruct all equipment suppliers of submittals and operation and maintenance manuals of the requirements in this Section.
  2. Furnish the submittals required by each section in the Instrumentation Specifications.
  3. Adhere to the wiring numbering scheme specified in Section 16075 - Identification for Electrical Systems throughout the Project:
     a. Uniquely number each wire.
     b. Wire numbers must appear on all Equipment Drawings.
  4. Use equipment and instrument tags, as indicated on the Drawings, for all submittals.

C. Submittal organization:
  1. First page:
     a. Specification section reference.
     b. Name and telephone number of individual who reviewed submittal before delivery to Engineer.
     c. Name and telephone number of individual who is primarily responsible for the development of the submittal.
     d. Comments.
     e. Contractor's review certification statement and signature.
  2. Next pages:
     a. Provide confirmation of specification compliance:
        1) Specification section: Include with each submittal a copy of the relevant specification section.
           a) Indicate in the left margin, next to each pertinent paragraph, either compliance with a check (√) or deviation with a consecutive number (1, 2, 3).
           b) Provide a list of all numbered deviations with a clear explanation and reason for the deviation.
     b. Include a response in writing to each of the Engineer's comments or questions for submittal packages which are re-submitted:
        1) In the order that the comments or questions were presented throughout the submittal.
        2) Referenced by index section and page number on which the comment appeared.
        3) Acceptable responses to Engineer's comments are either:
           a) Engineer's comment or change is accepted and appropriate changes are made.

            b) Explain why comment is not accepted or requested change is not made.
            c) Explain how requirement will be satisfied in lieu of comment or change requested by Engineer.
        4) Any re-submittal, which does not contain responses to the Engineer's previous comments shall be returned for Revision and Re-submittal.
        5) No further review by the Engineer will be performed until a response for previous comments has been received.
3. Remaining pages:
    a. Actual submittal data:
        1) Organize submittals in exactly the same order as the items are referenced, listed, and/or organized in the specification section.
        2) For submittals that cover multiple devices used in different areas under the same specification section, the submittal for the individual devices must list the area where the device is intended to be used.

D. Submittal requirements:
1. Furnish submittals that are fully indexed with a tabbed divider for every component.
2. Sequentially number pages within the tabbed sections. Submittals and operation and maintenance manuals that are not fully indexed and tabbed with sequentially numbered pages, or are otherwise unacceptable, will be returned without review.
3. Furnish submittals in the following general order, each in a separate bound set:
    a. Schedule of Values.
    b. Product Data.
    c. After Engineer acceptance of the Product Data, submit the Project Shop Drawing submittals.
    d. Loop Description Submittal.
    e. The Process Control Hardware and Software Submittal including, control system software, programming, and screens.
    f. Testing, Calibration and Process Start-Up procedures.
    g. Operation and Maintenance Data.
    h. Training Submittals.
    i. Record Documents.
4. Edit all submittals and operation and maintenance manuals so that the submittal specifically applies to only the equipment furnished.
    a. Neatly cross out all extraneous text, options, models, etc. that do not apply to the equipment being furnished, so that the information remaining is only applicable to the equipment being furnished.
5. Submit copies of shop drawings, and product data:
    a. Show dimensions, construction details, wiring diagrams, controls, manufacturers, catalog numbers, and all other pertinent details.
6. Where submittals are required, provide a separate submittal for each specification section. In order to expedite construction, the Contractor may make more than 1 submittal per specification section, but a single submittal may not cover more than 1 specification section:
    a. The only exception to this requirement is when 1 specification section covers the requirements for a component of equipment specified in another section. (For example, circuit breakers are a component of switchgear. The switchgear submittal must also contain data for the

associated circuit breakers, even though they are covered in a different specification section.)

7. Exceptions to Specifications and Drawings:
    a. Include a list of proposed exceptions to the Specifications and Drawings along with a detailed explanation of each.
    b. If there is insufficient explanation for the exception or deviation, the submittal will be returned requiring revision and re-submittal.
    c. Acceptance of any exception is at the sole discretion of the Engineer.
        1) Provide all items (materials, features, functions, performance, etc.) required by the Contract Documents that are not accepted as exceptions.
    d. Replace all items that do not meet the requirements of the Contract Documents, which were not previously accepted as exceptions, even if the submittals contained information indicating the failure to meet the requirements.

E. Submittal preparation:
1. During the period of preparation of submittals, the Contractor shall authorize direct, informal liaison between the ICSC and the Engineer for exchange of technical information. As a result of this liaison, certain minor refinements and revisions may be authorized informally by the Engineer, which do not alter the scope of Work or cause increase or decrease in the Contract price or times. During this informal exchange, no oral statement by the Engineer shall be construed to give formal approval of any component or method, nor shall any statement be construed to grant exception to, or variation from, these Contract Documents.
2. In these Contract Documents, some items of Work are represented schematically, and are designated for the most part by numbers, as derived from criteria in ISA-5.1:
    a. Employ the nomenclature and numbers designated in this Section and indicated on the Drawings exclusively throughout shop drawings, data sheets, and similar submittals.
    b. Replace any other symbols, designations, and nomenclature unique to a manufacturer's, suppliers, or subcontractor's standard methods with those identified in this Section and indicated on the Drawings.

F. Specific submittal requirements:
1. Shop drawings:
    a. Required for materials and equipment listed in this and other sections.
    b. Furnish sufficient information to evaluate the suitability of the proposed material or equipment for the intended use, and for compliance with these Specifications.
    c. Shop drawings requirements:
        1) Front, side, and, rear elevations, and top and bottom views, showing all dimensions.
        2) Locations of conduit entrances and access plates.
        3) Component layout and identification.
        4) Schematic and wiring diagrams with wire numbers and terminal identification.
        5) Connection diagrams, terminal diagrams, internal wiring diagrams, conductor size, etc.

        6) Anchoring method and leveling criteria, including manufacturer’s recommendations for the Project site seismic criteria.
        7) Weight.
        8) Finish.
        9) Nameplates:
            a) As specified in Section 16075 - Identification for Electrical Systems or as indicated on the Drawings.
        10) Temperature limitations, as applicable.
    d. Use equipment and instrument tags as depicted on the P&IDs for all submittals.
    e. Adhere to wiring numbering scheme outlined in Section 16075 - Identification for Electrical Systems throughout the Project:
        1) Uniquely number each wire per the Specifications.
    f. Wire numbers must appear on all equipment drawings.
    g. Organize the shop drawing submittals for inclusion in the Operation and Maintenance Manuals:
        1) Furnish the initial shop drawing submittal bound in one or more standard size, 3-ring, D-ring, loose-leaf, vinyl plastic, hard-cover binders suitable for bookshelf storage.
        2) Binder ring size: 2 inches.
    h. Include the letterhead and/or title block of the firm responsible for the preparation of all shop drawings. Include the following information in the title block, as a minimum:
        1) The firm's registered business name.
        2) Firm's physical address, email address, and phone number.
        3) Owner’s name.
        4) Project name and location.
        5) Drawing name.
        6) Revision level.
        7) Personnel responsible for the content of the drawing.
        8) Date.
    i. The work includes modifications to existing circuits:
        1) Clearly show all modifications to existing circuits.
        2) In addition, show all existing unmodified wiring to clearly depict the functionality and electrical characteristics of the complete modified circuits.
2. Product data:
    a. Submitted for non-custom manufactured material listed in this and other sections and shown on shop drawings.
    b. Include:
        1) Catalog cuts.
        2) Bulletins.
        3) Brochures.
        4) Quality photocopies of applicable pages from these documents.
        5) Identify on the data sheets the Project name, applicable specification section, and paragraph.
        6) Identify model number and options for the actual equipment being furnished.
        7) Neatly cross out options that do not apply or equipment not intended to be supplied.
    c. Use equipment and instrument tags as depicted on the P&IDs for all submittals.

        d. Adhere to wiring numbering scheme outlined in Section 16075 - Identification for Electrical Systems throughout the Project:
            1) Uniquely number each wire per the Specifications.
        e. Wire numbers must appear on all equipment drawings.
3. Detailed sequence of operation for all equipment or systems.
4. Operation and maintenance manuals:
    a. As specified in.
    b. Submit preliminary sets of these manuals to the Engineer for review of format and content:
        1) Engineer will return 1 set with comments.
        2) Revise and/or amend as required and submit the requisite number of copies to the Engineer 15 days before Functional Testing of the systems.
    c. Incorporate changes that occur during process start-up and submit as part of the final manuals.
    d. Provide comprehensive information on all systems and components to enable operation, service, maintenance, and repair.
    e. Include Record Documents and the accepted shop drawing submittals, modified for conditions encountered in the field during the work.
    f. Include signed results from Functional Testing and Process Operational Period.
    g. Provide installation, connection, operating, calibration, setpoints (e.g., pressure, pump control, time delays, etc.), adjustment, test, troubleshooting, maintenance, and overhaul instructions in complete detail.
    h. Provide exploded or other detailed views of all instruments, assemblies, and accessory components together with complete parts lists and ordering instructions.
    i. Spare parts list:
        1) Include a priced list of recommended spare parts for all the equipment furnished under this Contract:
            a) Include recommended quantities sufficient to maintain the furnished system for a period of 5 years.
        2) Annotate the list to indicate which items, if any and quantity are furnished as part of this Contract.
    j. Provide the name, address, and phone number of manufacturer and manufacturer's local service representative of these parts.
    k. Additional operation and maintenance manual requirements:
        1) Completely index manuals with a tab for each section:
            a) Each section containing applicable data for each piece of equipment, system, or topic covered.
            b) Assemble manuals using the accepted shop drawings, and include, the following types of data:
                (1) Complete set of 11-inch by 17-inch drawings of equipment.
                (2) Complete set of 11-inch by 17-inch drawings of the control system.
                (3) Complete set of control schematics.
                (4) Complete parts list for all equipment being provided.
                (5) Catalog data for all products or equipment furnished.
    l. Operational Manual:
        1) Prepare and provide a simplified version of the standard manufacturer’s HMI software and system operations manual that

        includes basic instructions in the application of the system as required for operators in day-to-day operations.
    - m. Control System Software Record Documents:
        - 1) Include complete documentation of all the software programs provided for the entire control and PCS system, including:
            - a) Listings of all application software on both hard copy and DVD, DVD-ROM, and CD-ROM.
            - b) Database, both hard copy and DVD, DVD-ROM, and CD-ROM.
            - c) Communication protocols.
            - d) All documentation necessary to maintain, troubleshoot, modify, or update the software system.
    - n. Organize the operation and maintenance manuals for each process in the following manner:
        - 1) Section A - Process and Instrumentation Diagrams.
        - 2) Section B - Control Descriptions.
        - 3) Section C - Loop Drawings.
        - 4) Section D - Instrument Summary.
        - 5) Section E - Instrument Data Sheets and Brochures.
        - 6) Section F - Sizing Calculations.
        - 7) Section G - Instrumentation Installation Details.
        - 8) Section H - Test Results.
        - 9) Section I - Operational Manual.
        - 10) Section J - Spare Parts List.
        - 11) Section K - Control System Software.
- 5. Material and equipment schedules:
    - a. Furnish a complete schedule and/or matrix of all materials, equipment, apparatus, and luminaries that are proposed for use:
        - 1) Include sizes, names of manufacturers, catalog numbers, and such other information required to identify the items.
- 6. Itemized instrument summary:
    - a. Submit a hard copy of the instrument summary.
    - b. List all of the key attributes of each instrument including:
        - 1) Tag number.
        - 2) Manufacturer.
        - 3) Model number.
        - 4) Service.
        - 5) Area location.
        - 6) Calibrated range.
        - 7) Loop drawing number.
    - c. Associated LCP, VCP, PCM, or PLC.
- 7. Instrument data sheets and cut sheets:
    - a. Furnish fully completed data sheets, both electronically in Microsoft Word or Excel and in hard copy, for each instrument and component according to ISA-20 Specification Forms for Process Measurement and Control Instruments, Primary Elements and Control Valves. The data sheets provided with the instrument specifications are preliminary and are not complete. They are provided to assist with the completion of final instrument data sheets. Additional data sheets may be required. Include the following information on the data sheet:
        - 1) Component functional description specified in this Section and indicated on the Drawings.
        - 2) Manufacturers model number or other product designation.

        3) Tag number specified in this Section and indicated on the Drawings.
        4) System or loop of which the component is a part.
        5) Location or assembly at which the component is to be installed.
        6) Input and output characteristics.
        7) Scale range with units and multiplier.
        8) Requirements for electric supply.
        9) Requirements for air supply.
        10) Power consumption.
        11) Response timing.
        12) Materials of construction and of component parts that are in contact with, or otherwise exposed to, process media, and or corrosive ambient air.
        13) Special requirements or features, such as specifications for ambient operating conditions.
        14) Features and options that are furnished.
    b. Provide a technical brochure or bulletin (“cut sheet”) for each instrument on the project. Submit with the corresponding data sheets:
        1) Where the same make and model of instrument is used in 2 or more applications on the project, and the process applications are nearly identical, and the materials, features and options are identical submit one brochure or bulletin for the set of identical instruments.
        2) Include a list of tag numbers for which it applies with each brochure or bulletin.
        3) Furnish technical product brochures that are complete enough to verify conformance with all Contract Document requirements, and to reflect only those features supplied with the device.
        4) Cross out models, features, options, or accessories that are not being provided.
        5) Clearly mark and identify special options and features.
    c. Organization: Index the data sheets and brochures in the submittal by systems or loops.
8. Control panel hardware submittal:
    a. Submit the following in 1 submittal package.
    b. Complete and detailed bills of materials:
        1) Including quantity, description, manufacturer, and part number for each assembly or component for each control panel.
        2) Include all items within an enclosure.
    c. Complete grounding requirements for each system component including any requirements for PLCs, process LANs, and Control System equipment.
    d. Requirements for physical separation between control system components and 120 VAC, 480 VAC, and medium voltage power cables.
    e. UPS and battery load calculations to show that the backup capacity and time meet the specified requirements.
    f. Provide a data sheet for each control system component together with a technical product brochure or bulletin, which include:
        1) The manufacturer's model number or other identifying product designation.
        2) Tag and loop number.
        3) System to which it belongs.
        4) Site to which it applies.
        5) Input and output characteristics.

        6) Requirements for electric power.
        7) Device ambient operating requirements.
        8) Materials of construction.

9. Schedule of values:
    a. In addition to completing all items referred to in the schedule of values, Section 01292 - Schedule of Values, submit per unit instrument and labor rate costs used in developing the final bid for the PCS system, for the express purpose of pricing and cost justification for any proposed change orders. It is the responsibility of the ICSC subcontractor to prove to the Engineer's satisfaction that said per unit costs were used in the development of the final Bid amount.
10. Installation recommendations:
    a. Submit the manufacturer's printed recommendations for installation of instrumentation equipment.
11. Training submittals:
    a. Develop and submit for review a general training plan for approval by Owner within 14 calendar days from Notice to Proceed. Include complete descriptions of all planned training classes, a preliminary training schedule, a list of all proposed instructors along with resumes, examples of proposed training manuals, and a description of any special training tools to be used (simulators, self-paced modules, personal computer-based training, etc.).
    b. The Engineer will review the general training plan. Special emphasis will be placed on review of the qualifications of the proposed instructors and the timing of the individual courses to maximize their effectiveness. If, in the opinion of the Engineer, the proposed instructors are not sufficiently qualified to conduct the specified training courses, or lack experience, where required, on the specific configuration of the system, provide more qualified instructors.
    c. The general training plan and schedule shall be updated by the Contractor at the beginning of each Phase and approved by the Owner a minimum of 30 days prior to commencement of training.
    d. Training course plan submittals:
        1) For each training course or other training activity, submit a detailed, complete outline and agenda for each lesson as specified in Section 01756 - Commissioning.
        2) Describe any student pre-requisites for the course or training activity.
        3) Provide an updated schedule for all sessions of the course, including dates, times, durations, and locations.
        4) Submit training materials.
    e. Incorporate all submittal review comments into the course.
    f. Do not conduct training courses before review and acceptance of the Course Plan submittal for the course.
12. Project Record documents:
    a. Furnish as specified in Section 01770 - Closeout Procedures.
    b. Record Drawing requirements:
        1) Provide Project Record Drawing of all Instrumentation Drawings.
        2) Update Record Drawings weekly.
        3) Record Drawings must be fully updated as a condition of the monthly progress payments.

    4) Clearly and neatly show all changes including the following:
        a) All existing pipe, conduit, wire, instruments or other structures encountered or uncovered during construction.
c. Shop drawings:
    1) General:
        a) Coordinate all aspects of the Work so that a complete, instrumentation, computer, and control system for the facility is supported by accurate shop and record drawings:
            (1) Clearly show every wire, circuit, and terminal provided under this contract on one or more submitted wiring diagrams.
        b) Show all interfaces between any of the following: instruments, vendor control panels, motor control centers, motor starters, variable speed drives, control valves, flow meters, chemical feeders, and other equipment related to the PCS.
        c) Generate all drawings developed for this project utilizing AutoCAD by Auto Desk Version 2012 or later:
            (1) Furnish on CD-ROM disks containing the following for each drawing:
                (a) Original CAD files in DWG format.
                (b) PDF version.
            (2) Provide hard copies on 11-inch by 17-inch plain bond paper.
        d) Upon completion of the Work, update all shop drawings to indicate the final as-built configuration of the systems:
            (1) Should an error be found in a shop drawing during installation or process start-up of equipment, note the correction, including any field changes found necessary, on the drawing and submit the corrections in the Record Documents.
            (2) Update, check, and revise all wiring drawings and other submitted drawings and documents to show final installed conditions.
            (3) Provide as-built shop drawings for all instrumentation equipment on 11-inch by 17-inch using plain bond paper.
            (4) Provide electronic copies of these documents on CD-ROM disks in AutoCAD DWG 2010 format or later and PDF format. Size all drawings to be readable and legible on 11-inch by 17-inch media.
        e) Submittal Documents:
            (1) Provide an interim submittal of Record Documents after the PCS system Functional Testing.
            (2) Submit final Record Documents before Substantial Completion or earlier if so specified in Section 01782 - Operation and Maintenance Data or the General Requirements.
        f) Review and Corrections:
            (1) Correct any Record Documents or other documents found to be incomplete, not accurate, of poor quality, or containing errors.
            (2) Promptly correct and re-submit Record Documents returned for correction.

        2) Furnish written information prepared specifically for this Project using Microsoft Word and.PDF formats and printed on 8.5-inch by 11-inch plain bond paper:
            a) Provide electronic copies of these documents on CD-ROM disks.
    d. Review and corrections:
        1) Correct any record documents or other documents found to be incomplete, not accurate, of poor quality, or containing errors.
        2) Promptly correct and re-submit record documents returned for correction.

13. Loop Drawings:
    a. Submit loop drawings for every analog, discrete, and fieldbus signal and control circuit:
        1) Provide a loop drawing submittal that completely defines and documents the contents of each monitoring, alarming, interlock, and control loop on this Project.
        2) This requirement applies to all signal and control circuits associated with equipment on this Project including vendor supplied equipment packages and control panels.
        3) Provide loop drawings in the format indicated in the contract drawings. Provide all tagging in accordance with the Owner's standard.
    b. Show every instrument and I/O point on at least one loop diagram.
    c. Provide a complete index in the front of each bound volume:
        1) Index the loop drawings by systems or process areas.
    d. Provide drawings showing definitive diagrams for every instrumentation loop system:
        1) Show and identify each component of each loop or system using requirements and symbols from ISA-5.4.
        2) Furnish a separate drawing sheet for each system or loop diagram.
    e. In addition to the ISA-5.4 requirements, show the following details:
        1) Functional name of each loop.
        2) Reference name, drawing, and loop diagram numbers for any signal continuing off the loop diagram sheet.
        3) Show all terminal numbers, regardless of the entity providing the equipment.
        4) MCC panel, circuit, and breaker numbers for all power feeds to the loops and instrumentation.
        5) Designation of and, if appropriate, terminal assignments associated with, every manhole, pull-box, junction box, conduit, and panel through which the loop circuits pass.
        6) Show vendor control panel, instrument panel, conduit, junction box, equipment and PCS terminations, termination identification, wire numbers and colors, power circuits, and ground identifications.
        7) If a circuit is continued on another drawing, show the name and number of the continuation drawing on the loop drawing. Provide complete references to all continuation drawings whether vendor control panels, other loop drawings, existing drawings provided by the Owner, or other drawings.
    f. In addition to the above requirements, provide loop diagrams in accordance with the example loop diagram as indicated on the Drawings.

14. Instrument Installation Drawings:
    a. Submit, instrument installation, mounting, and anchoring details for all components and assemblies, including access requirements and conduit connection or entry details.
    b. Furnish for each instrument a dedicated 8 1/2-inch by 11-inch installation detail that pertains to the specific instrument by tag number.
    c. For each detail, provide certification and the hard copies, by the instrument manufacturer, that the proposed installation is in accordance with the instrument manufacturer's recommendations and is fully warrantable.
    d. For each detail, provide, as a minimum, the following contents:
        1) Necessary sections and elevation views required to define instrument location by referencing tank, building or equipment names and numbers, and geographical qualities such as north, south, east, west, basement, first floor, etc.
        2) Ambient temperature and humidity where the instrument is to be installed.
        3) Corrosive qualities of the environment where the instrument is to be installed.
        4) Hazardous rating of the environment where the instrument is to be installed.
        5) Process line pipe or tank size, service and material.
        6) Process tap elevation and location.
        7) Upstream and downstream straight pipe lengths between instrument installation and pipe fittings and valves.
        8) Routing of tubing and identification of supports.
        9) Mounting brackets, stands, anchoring devices, and sun shades.
        10) Conduit entry size, number, location, and delineation between power and signal.
        11) NEMA ratings of enclosures and all components.
        12) Clearances required for instrument servicing.
        13) List itemizing all manufacturer makes, model numbers, quantities, lengths required, and materials of each item required to support the implementation of the detail.
15. Control Panel Drawings:
    a. Layout Drawings:
        1) Submit panel, enclosure, console, furniture, and cabinet layout drawings for all items provided.
        2) As a minimum, include the following information:
            a) To scale front, side, and plan views.
            b) Dimensions.
            c) Interior and exterior arrangements.
            d) Mounting information, including conduit entrance location.
            e) Finish data.
            f) Tag number and functional name of items mounted in and on each panel, console, and cabinet.
            g) Nameplate legend including text, letter size, materials, and colors.
    b. Wiring and piping diagrams:
        1) Submit panel wiring and piping diagrams for every panel that contains wiring and/or piping.

        2) Include the following information:
            a) Name of panel.
            b) Wiring and piping sizes and types.
            c) Terminal strip numbers.
            d) Wire tags and labels.
            e) Functional name and manufacturer's designation for items to which wiring and piping are connected.
            f) Electrical control schematics in accordance with ANSI standards.
    c. Installation drawings:
        1) Provide site-specific installation drawings for all control equipment panels, including dimensions.
        2) Provide scaled drawings and show the position of the equipment at its intended installation location.
        3) Show the placement of all equipment being provided under this Contract and its spatial relationship to all other equipment located in the abutting and adjoining areas.
        4) Show all required access and clearances associated with the equipment with a statement of compliance to manufacturer's recommendations, NEC, and other applicable codes.

16. Schematic Diagrams:
    a. Submit schematic diagrams for all electrical equipment in ladder diagram format.
    b. Include device and field connection terminal numbers on all schematic diagrams.
    c. Incorporate equipment manufacturer’s shop drawing information into the schematic diagrams in order to document the entire control system.
17. Control System Diagram:
    a. Submit a complete set of control system diagrams including the following information:
        1) All PLCs, workstations, printers, communication devices, and communication links:
            a) Show all PLCs with their current I/O allocation, and future I/O allocation, current plus spares provided, and maximum potential I/O based on available slots.
        2) All cables required for communication requirements.
        3) Show each component fully annotated with conduit size and number associated with the power source.
18. Process Control Software Submittal:
    a. In accordance with Product Data and Shop Drawing general requirements.
    b. Submit a complete description of the standard application software programs, operating system and utility programs, including modifications and explanation of how the specific functional requirements are met:
        1) Provide a cross-reference between the Specification requirements and the software submittal, in order to provide the Engineer the ability to identify how each specified requirement or function is met.
    c. A complete listing of the PCS system point I/O database:
        1) Include for each data point, relevant parameters such as range, contact orientation, limits, incremental limits, I/O card byte, I/O hardware address, and PLC assignment.
        2) Organize on a site-by-site basis, separate by point type.

        3) In addition to the active I/O points, list the implemented spare I/O points and the available I/O points remaining on each card, as well as other defined future points specified or shown.
        4) Upon completion of the Work, update all I/O lists to indicate the final as-built configuration of the systems:
            a) Organize as-built I/O list on a site-by-site basis, separated by equipment and point type.
    d. Detailed descriptions of procedures used to implement and modify control strategies and database construction.
    e. Preliminary overview, screens, station graphic displays, and preliminary reports.
    f. Refer to Section 17762 - Control Systems: PCS Software for additional requirements.

19. Instrumentation and Control System Contractor Statement of Qualifications:
    a. Submit statement of qualifications of the proposed ICSC in accordance with subsequent requirements of this Section.
20. Control Descriptions:
    a. For each control loop, provide a detailed functional description of the operation of the equipment, signals, and controls as shown on the P&IDs:
        1) Include all functions depicted or described in the Contract Documents.
        2) Include within the Control Description content:
            a) All specific requirements.
            b) All common requirements that pertain in general to all loops.
            c) Listing all ranges, setpoints, timers, values, counter values, etc.
21. Test Procedure Submittals:
    a. Submit the proposed procedures to be followed during tests of the PCS and its components in 2 parts:
        1) Preliminary Submittal: Outline of the specific proposed tests and examples of proposed forms and checklists.
        2) Detailed Submittal: After successful review of the Preliminary Submittal, submit the proposed detailed test procedures, forms, and checklists. Include a statement of test objectives with the test procedures.
22. Test reports:
    a. As specified in Section 01330 - Submittal Procedures.
    b. Include the following:
        1) A description of the test.
        2) List of equipment used.
        3) Name of the person conducting the test.
        4) Date and time the test was conducted.
        5) All raw data collected.
        6) Calculated results.
        7) Each report signed by the person responsible for the test.

1.06 QUALITY ASSURANCE

A. Manufacture instruments at facilities certified to the quality standards of ISO 9001.

B. ICSC qualifications:
   1. Allowed integrators for this project have been approved by the Owner and listed in the pre-approved list. Integrators not on this list may not be used for this project.
   2. Determination and modification of the pre-approved Integrator list is at the sole discretion of the Owner.

C. Furnish all equipment listed by and bearing the label of UL or of an independent testing laboratory acceptable to the Engineer and the Authority Having Jurisdiction.

D. The ICSC must have their own operating UL listed panel fabrication facility. All panels must be fabricated at this facility and meet all UL 508/508A requirements.

E. ICSC:
   1. Contractor, through the use of a pre-approved qualified ICSC, is responsible for the implementation of the PCIS and the integration of the system with other required instrumentation, control devices, and software.
   2. The ICSC assumes full responsibility, through the Contractor, to perform all work to select, furnish, install, test, calibrate, and place into operation all instrumentation, controls, telemetry equipment, control panels, and control system including application software, for a complete, integrated and functional PCIS system.
   3. Due to the complexities associated with the interfacing of numerous control system devices, it is the intent of these Specifications that the ICSC be responsible for the integration of the PCIS devices provided under the Contract Documents with the objective of providing a completely integrated control system.

1.07 DELIVERY, STORAGE, AND HANDLING

A. As specified in Section 01600 - Product Requirements.

B. Store all equipment and materials delivered to the job site in a location that will not interfere with the construction or the Owner’s operations.

C. Shipping precautions:
   1. After completion of shop assembly, successful Source Test, pack all equipment, cabinets, panels, and consoles in protective crates and enclose in heavy-duty polyethylene envelopes or secured sheeting to provide complete protection from damage, dust, and moisture.
   2. Place dehumidifiers when required, inside the polyethylene coverings.
   3. Skid-mount the equipment for final transport.
   4. Provide lifting rings for moving without removing protective covering.
   5. Display boxed weight on shipping tags together with instructions for unloading, transporting, storing, and handling at the job site.

D. Special instructions:
   1. Securely attach special instructions for proper field handling, storage, and installation to each piece of equipment before packaging and shipment.

E. Tagging:
   1. Tag each component and/or instrument to identify its location, instrument tag number, and function in the system.

2. Firmly attach a permanent tag indelibly machine marked with the instrument tag number, as given in the tabulation, on each piece of equipment constituting the PCS.
3. Tag instruments immediately upon receipt in the field.
4. Prominently display identification on the outside of the package.
5. Utilize the Tag and Loop Number identifications shown on the P&IDs.

F. Delivery and inspection:
   1. Deliver products in undamaged condition, in manufacturer’s original container or packaging with identifying labels intact and legible. Include date of manufacture on label.

1.08 PROJECT OR SITE CONDITIONS

A. Site conditions:
   1. Provide a PCS, including all equipment, raceways, and any other components required for a complete installation that meets the environmental conditions for the Site as specified in the General Requirements and below.
   2. Wind:
      a. Provide all equipment and construction techniques suitable for the site wind loading criteria.
   3. Altitude, temperature and humidity:
      a. Provide all equipment and instrumentation fully rated for continuous operation at this altitude, temperature and humidity conditions with no additional derating factors applied.
      b. Provide additional temperature conditioning equipment to maintain all equipment and instrumentation in non-conditioned spaces or outdoors subject to these ambient temperatures 10 degrees Fahrenheit above the minimum operating temperature and 10 degrees Fahrenheit below maximum operating temperature as determined by the equipment manufacturer’s guidelines:
         1) Provide all power wiring for these devices (e.g., heaters, fans, etc.), whether or not indicated on the Drawings.
   4. Area classifications:
      a. Furnish enclosures that match the area classifications as specified in Section 16050 - Common Work Results for Electrical.
   5. Site security:
      a. Abide by all Owner security and safety rules concerning the Work on the Site.

1.09 SEQUENCING

A. General:
   1. As specified in Sections 01312 - Project Meetings and 01756 - Commissioning.
   2. Testing requirements are specified in Sections 01756 - Commissioning, 17950 - Testing, Calibration, and Commissioning and other sections.
   3. General scheduling requirements are specified in 01324C - Progress Schedules and Reports.
   4. Work restrictions and other scheduling requirements are specified in Section 01140 - Work Restrictions.
   5. Commissioning requirements as specified in Section 01756 - Commissioning.

B. Pre-submittal Software Workshop
  1. Before development of the Process Control Software Submittal, the ICSC shall facilitate a software development workshop with the Owner.
  2. This workshop should include a discussion on the Owner's requirements for modifications to existing software systems and requirements for onsite programming and access to the Owner's systems.
  3. Software development workshop is meant to discuss programming conventions and guidelines including but not limited to the following:
     a. Owner's PLC programming software version.
     b. Obtaining Owner's PLC programming standard function blocks and programming conventions.
     c. Reviewing Owner's existing SCADA HMI system for general conventions, standard graphics, screens to be modified, and general configuration.
     d. Discussion on modification to the Owner's existing Master SCADA Application.
  4. Workshop minutes and decisions to be documented and submitted in the Process Control Software Submittal.

C. Source testing:
  1. Before the delivery and installation of the PCS system to the job site, but after the procurement, assembly, and configuration of all components, perform the Source Test and Factory Testing.
  2. Before the delivery and installation of control panels, PLCs, control system equipment, and other PCS components at the job site, but after the procurement and assembly of components, perform Source Test and Factory Acceptance Test.
  3. Schedule the Source Test after receiving approval of the Source Test procedures submittal.
  4. Submit a copy of the test procedures including all forms at least 21 days before any scheduled test date.
  5. Notify the Engineer and Owner of scheduled tests a minimum of 15 days before the date of the test.

D. General Field Start-Up and testing procedures:
  1. As specified in Section 01756 - Commissioning.

E. Installation testing:
  1. As specified in Section 01756 - Commissioning.
  2. Commence after acceptance of all training, wire test, calibration tests, and loop validation tests, and all inspections have demonstrated that the PCIS complies with all Contract requirements.
  3. Acceptance of the PCIS Installation testing must be provided in writing by the Owner before the performance testing may begin.

F. Training:
  1. As specified in Section 01756 - Commissioning.

G. Functional testing:
  1. Representatives from each of the following groups shall be in attendance during the functional Testing: System Supplier, Engineer, Owner. Commence after acceptance of all training, wire test, calibration tests, and loop validation

tests, and all inspections have demonstrated that the PCIS complies with all Contract requirements.

2. Loop validation test.
3. As specified in Section 17950 - Testing, Calibration, and Commissioning.
   a. Notify the Owner of scheduled tests a minimum of 21 days before the estimated completion date of installation and wiring of the PCIS.
   b. Complete loop validation testing a minimum of 5 days before the pre-commissioning phase of the project.
   c. Loop validation certifications:
      1) After the field device loop tests have been successfully completed as specified in Section 17950 - Testing, Calibration, and Commissioning for all individual instruments, all separate analog control networks, all valves, all VCPs, all motors, all local operator interface panels, all motor control centers, etc., submit a certified copy of all test forms signed by the Contractor, Vendor, and the Owner's representative with test data entered, together with a clear and unequivocal statement that all instrumentation, including all control and signal wiring, has been successfully calibrated, inspected, and tested.
         a) Acceptance of the PCIS Installation Testing must be provided in writing by the Engineer before the Process Operational Period may begin.

H. Provide all special tools and spare parts, as specified in the Maintenance paragraph of this Section, before Process Operational Period commences, suitably wrapped, and identified.

I. Process Operational Period:
   1. Upon completion of the Process Operational Period, conduct an Instrumentation and Controls Process Performance Test as a condition for Project final completion.

1.10 SCHEDULING (NOT USED)

1.11 WARRANTY

A. Provide additional warranty as specified in the individual Instrumentation and Control Specifications that extends beyond the Correction Period, as specified in the General Conditions and Supplementary Conditions.

1.12 SYSTEM PROCESS START-UP

A. Replace or modify equipment, software, and materials that do not achieve design requirements after installation in order to attain compliance with the design requirements:
   1. Following replacement or modification, retest the system and perform additional testing to place the complete system in satisfactory operation and obtain compliance acceptance from the Engineer.

1.13 OWNER'S INSTRUCTIONS (NOT USED)

1.14 MAINTENANCE

A. Before Substantial Completion, perform all maintenance activities required by the Contract Documents including any calibrations, final adjustments, component replacements or other routine service required before placing equipment or systems in service.

B. Furnish all spare parts as required by the Contract Documents.

C. Provide additional spare parts specified in other sections of the Instrumentation and Control Specifications.

D. Submit all special tools and spare parts, suitably wrapped and identified, before Process Operational Period commences.

PART 2 PRODUCTS

2.01 MANUFACTURERS

A. Provide similar items from a single manufacturer throughout the PCIS portion of the Project.

B. Allowable manufacturers are specified in individual instrument and equipment specifications.

2.02 EXISTING PRODUCTS (NOT USED)

2.03 MATERIALS

A. Furnish all materials under this Contract that are new, free from defects, and standard products produced by manufacturers regularly engaged in the production of these devices and that bear all approvals and labels as required by the Specifications.

B. Provide materials complying with the applicable industrial standard as specified in the Contract Documents.

2.04 MANUFACTURED UNITS (NOT USED)

2.05 EQUIPMENT (NOT USED)

2.06 COMPONENTS

A. Furnish all meters, instruments, and other components that are the most recent field proven models marketed by their manufacturers at the time of submittal of the shop drawings unless otherwise specified to match existing equipment.

B. Unless otherwise specified, furnish individual instruments that have a minimum accuracy of within 0.5 percent of full scale and a minimum repeatability of within 0.25 percent of full scale.

C. Signal transmission:
  1. Analog signals:
    a. Furnish analog measurements and control signals that vary in direct linear proportion to the measured variable, unless otherwise indicated.
    b. Furnish electrical analog signals outside control panels that are 4 to 20 milliamperes 24 VDC, except as indicated.
    c. Analog signals within enclosures may be 1 to 5 VDC.
    d. Electrically or optically isolate all analog signals from other signals.
    e. Furnish regulated analog signals that are not affected by changes in supply voltage or load resistance within the unit’s rating.
    f. Maintain the total 4 to 20 milliamperes loop impedance to 10 percent below the published value at the loop operating voltage.
    g. Where necessary, reduce loop impedance by providing current-to-current (I/I) isolation amplifiers for signal re-transmission.
  2. Pneumatic signals:
    a. All pneumatic signals: 3 to 15 pounds per square inch gauge.
  3. Discrete input signals:
    a. As indicated in the controller hardware specification.
  4. Discrete output signals:
    a. Dry contacts or TRIAC outputs (with express written approval by the Engineer) as needed to coordinate with the field device.
    b. Provide external terminal block mounted fuse with blown fuse indication for all discrete outputs.
    c. Provide interposing relays for all discrete outputs for voltage and/or current compatibilities.
    d. Provide interposing relays as required for functionality of the control circuit.
  5. Signal performance and design criteria:
    a. Stability:
      1) After Controls have taken corrective action, oscillation of the final control element shall not exceed 2 cycles per minute or a magnitude of motion of 0.5 percent of full travel.
    b. Response:
      1) Any change in setpoint or controlled variable shall produce a corrective change in position of the final control element and stabilized within 30 seconds.
    c. Agreement:
      1) Setpoint indication of controlled variable and measured indication of controlled variable shall agree within 3 percent of full scale over a 6:1 operating range.
    d. Repeatability:
      1) For any repeated magnitude of control signal, from either an increasing or decreasing direction, the final control element shall take a repeated position within 0.5 percent of full travel regardless of force required to position the final element.
    e. Sensitivity:
      1) Controls shall respond to a setpoint deviations and measured variable deviations within 1.0 percent of full scale.
    f. Performance:
      1) All instruments and control devices shall perform in accordance with the manufacturers’ specifications.

D. Discrete circuit configuration:
   1. Configure discrete control circuits to fail safe, on loss of continuity or loss of power.
   2. Alarm contacts: Fail to the alarm condition.
   3. Control contacts fail to the inoperative condition unless otherwise indicated on the Drawings.

E. Grounding:
   1. Provide control panels with a single ground bus:
      a. Provide multiple panels in one location with a common point for signal ground bus connection to ground.
   2. Ground single-point ground shields and measurement loops at the source panel external terminals, unless otherwise noted, by bonding to the control panel signal ground bus.
   3. Provide isolating amplifiers within control panels for field equipment possessing a grounded input or output, except when the panel circuit is galvanically isolated.

2.07 ACCESSORIES

A. Provide flow conditioning devices or other required accessories if necessary to meet the accuracy requirements in the Contract Documents.

B. Nameplates:
   1. Provide a nameplate for each controller, instrument transducer, instrument power supply, solenoid, or any other control device located either in the field or within panels.
   2. All nameplates shall be of identical style, color, and material throughout the facility.
   3. Device nameplates shall include:
      a. Designations as indicated on the Drawings and identified on the Process and Instrumentation Drawings.
         1) Device tag and loop number ID (e.g., FIT-60-1).
         2) PLC ID (e.g., PLC-11).
         3) Power information (e.g., PCM-11, 120VAC).
      b. White lettering on a black background, laminated plastic.
   4. All instruments shall be equipped with Type 316 stainless steel nameplate with the instrument tag stamped in 3/8-inch letters and connected to the instrument using Type 316 stainless steel wire.

2.08 MIXES (NOT USED)

2.09 FABRICATION (NOT USED)

2.10 FINISHES (NOT USED)

2.11 SOURCE QUALITY CONTROL

A. Provide all equipment that is new, free from defects, and standard products produced by manufacturers regularly engaged in the production of these products that bear all approvals and labels as required by the Specifications.

B. Arrange with all manufacturers of the equipment and fabricators of panels and cabinets, to allow the Owner and Engineer to inspect and witness the testing of the equipment at the site of fabrication:
   1. Equipment includes the cabinets, special control systems, flow measuring devices, and other pertinent systems and devices.

C. Source Test is specified in Section 17950 - Testing, Calibration, and Commissioning.

PART 3 EXECUTION

3.01 EXAMINATION

A. The ICSC is encouraged to attend a pre-bid conference and examine the premises completely before bidding. It is the ICSC's responsibility to be fully familiar with the existing conditions and local requirements and regulations.

B. Review the existing Site conditions and examine all shop drawings for the various items of equipment in order to determine exact routing and final terminations for all wiring and cables.

C. Provide a complete instrumentation and control system:
   1. Install all cables and interfaces as may be necessary to provide a complete and operating process control and instrumentation system.

3.02 PREPARATION (NOT USED)

3.03 INSTALLATION

A. Equipment locations indicated on the Drawings may change due to variations in equipment size or minor changes made by others during construction:
   1. Verify all dimensions as indicated on the Drawings:
      a. Actual field conditions govern all final installed locations, distances, and levels.
   2. Review all information indicated on the Drawings, including architectural, structural, mechanical, instrumentation, and the accepted electrical, instrumentation, and mechanical shop drawings, and coordinate Work as necessary to adjust to all conditions that arise due to such changes.
   3. Make minor changes in location of equipment before rough in, as directed by the Owner or Engineer.

B. Perform all related Electrical Work in accordance with the applicable sections of the Electrical Specifications.

C. The PCIS configurations are diagrammatic:
   1. The locations of equipment are approximate unless dimensioned.
   2. Where Project conditions require, make reasonable changes in locations and arrangements.

D. Field instruments installation:
   1. Install field instruments as specified in the Contract Documents, API RP 550 and RP 551, and the manufacturer’s instructions.

2. Mount field instruments so that they can be easily read, readily approached, and easily serviced, and so they do not restrict access to mechanical equipment:
    a. Mount field instruments on a pipe stand or local panel, if they are not directly mounted, unless otherwise indicated on the Drawings.
    b. Provide sun shields for all field electronic instruments exposed to direct sunlight.
3. Make connections from rigid conduit systems to field instruments with PVC coated flexible conduit:
    a. Type of flexible conduit required for the area classification:
        1) Area classification as specified in Section 16050 - Common Work Results for Electrical.
    b. Maximum length of 18 inches.
4. Connect field instruments with cable as specified in the Electrical Specifications, except when the manufacturer requires the use of special cable, or otherwise specified in this Section:
    a. Special cable applications shall be in accordance with the NEC.
5. Verify the correctness of each installation:
    a. Polarity of electric power and signal connections.
6. Ensure all process connections are free of leaks.

E. Process sensing lines and air tubing:
1. Install individual tubes parallel and/or perpendicular to and near the surfaces from which they are supported.
2. Provide supports for rigid tubing at intervals of not more than 3 feet.
3. Slope horizontal runs of instrument tubing at a minimum of 1/16-inch per foot to allow for draining of any condensate.
4. Bends:
    a. Use proper tool.
    b. Make bends for parallel lines symmetrical.
    c. Make bends without deforming or thinning the walls of the tubing.
5. Square-cut and clean all ends of tubing before being inserted in the fittings.
6. Provide bulkhead fittings at all panels requiring pipe and/or tubing entries.
7. Use stainless steel tubing for all piping hard piped from the air header, unless otherwise indicated on the Drawings or not compatible with the fluids or atmosphere in the area:
    a. Use flexible connections only on moving equipment and under the constraint that the length shall be less than 1.5 times maximum travel of the equipment.

F. Conduit, cables, and field wiring:
1. Provide all PCS equipment cables, and process LAN communication networks under the Instrumentation and Control Specifications.
2. Provide terminations and wire identification as specified in the Electrical Specifications.
3. Protect all wiring from sharp edges and corners.
4. Provide all conduits, fittings, boxes, etc. in accordance with all the requirements of the Electrical Specifications.

G. Equipment tie-downs:
1. Anchor all instruments, control panels, and equipment by methods that comply with seismic and wind bracing requirements, which apply to the Site.

    2. All control panels, VCPs, LCPs, RTUs, PCMs, etc., shall be permanently mounted and tied down to structures.

H. Instrument tagging:
    1. As specified in Section 16075 - Identification for Electrical Systems.
    2. Provide all field-mounted instruments with nameplates:
        a. Nameplates engraved with the instrument’s full tag number as indicated on the Drawings:
            1) Affix tags with stainless steel wire fasteners.
    3. Provide all back of panel instruments with nameplates:
        a. Engraved with the instrument’s full tag number as indicated on the Drawings:
    4. Provide all front of panel instruments with a nameplate:
        a. Engraving to include the following:
            1) Instrument’s full tag number.
            2) Service description.
        b. Nameplates:
            1) Secure nameplates to the panel with stainless steel screws.
            2) Use an accepted adhesive if screws would violate the NEMA or other ratings of the enclosure.

I. Cable and conductor termination:
    1. Terminate all cables and conductors on terminal blocks.
    2. Terminal block enclosures:
        a. Suitable for the area classification as specified in Section 16050 - Common Work Results for Electrical.

J. Surge protection:
    1. Provide surge protection for all instrument loops with voltage surge protection units installed on the instruments and the panel.
    2. All 4-20mA instrumentation shall have surge protection at both signal ends and 4-wire instrumentation shall also have signal isolation installed inside the PCM.
    3. Individually fuse each 4 to 20 milliamperes direct current loop with a 1/16 ampere fuse between power supplies and receiver surge protectors.
    4. Provide voltage surge protection for 4 wire transmitters and analyzers:
        a. Protect both power source and signal loop.

K. Scope and responsibilities:
    1. Refer to the following table for procurement and installation scope and responsibilities for the owner, design engineer, contractor, integrator, and programmer.

Item No.	Task	Responsible Parties					Service or Equipment Supplied By
		Owner (O)	Design Engineer	Contractor (C)	Integrator (I)	Programmer (P)	
1.00	**I&C Design Update**						
1.01	Owner furnished equipment procurement.	L	A		A		O
1.02	Equipment and package system procurement.			L			C
1.03	Equipment and package system submittal preparation.			L			C
1.04	Equipment and package system submittal review.	A	L				DE/O
1.05	Update I&C design to incorporate any changes, if changes approved by Owner during the submittal processes, for equipment and/or package systems.	A	L		A		DE
2.00	**HMI Application Programming**						
2.01	HMI software application programming.	A		A	L		I
2.02	Digital field network interface and network configuration (ownership including calibration and setup).	A		A	L		I
2.03	HMI Graphical User Interface.	A		A	L		I
3.00	**Vendor Package and Auxiliary System Application Programming**						
3.01	Vendor Package PLC software application programming (procured by Contractor).			A	L		C
3.02	Configuration of auxiliary systems necessary to provide required functionality and connectivity for monitoring and control of auxiliary systems: HVAC, Power Monitors, Lighting, and Fire Protection.			A	L		C
4.00	**Integration**						
4.01	Instrumentation specifications and procurement.			A	L		I
4.02	Vendor supplied package and Auxiliary system coordination with plant PLC (communications, submittals, software development).			A	L		I

Item No.	Task	Responsible Parties					Service or Equipment Supplied By
		Owner (O)	Design Engineer	Contractor (C)	Integrator (I)	Programmer (P)	
4.03	Vendor package systems and Auxiliary system interface demonstration at FAT, where required.			S	L		I
4.04	Control system equipment, Vendor package system, and Auxiliary system interface submittal review and preparation for formal Owner review.			S	L		I
4.05	I&C Design update to reflect approved vendor submittals (if required).	A	L	S	S		DE
5.00	**Equipment and Panels**						
5.01	***PLC Process Control System***						
5.02	PLC control panels and associated panel equipment procurement.			A	L		I
5.03	PLC panels and associated panel equipment fabrication.			A	L		I
5.04	PLC panels factory testing FAT.	W	W	A	L		I
5.05	PLC installation.	W		A	L		I
5.06	PLC field testing SAT.	W	W	A	L		I
5.07	Operator Interface Stations (both in panel and desktop) related setup and configuration.	W		A	L		I
5.08	Field PLC interfaces (HMIs).			A	L		I
5.09	***Communications***						
5.10	Fiber patch panel procurement and installation.			A	L		I
5.11	Ethernet switch procurement and installation.			A	L		I
5.12	Copper patch panel procurement and installation.			A	L		I
5.13	Uninterruptible power supply procurement and installation.			A	L		I
5.14	***Field Local Control Panels (LCPs)***						
5.15	LCP procurement and fabrication.			A	L		I
5.16	LCP installation.			A	L		I

Item No.	Task	Responsible Parties Owner (O)	Design Engineer	Contractor (C)	Integrator (I)	Programmer (P)	Service or Equipment Supplied By
5.17	***Control Room***						
5.18	Workstation furniture procurement and installation.			A	L		I
6.00	**Instruments**						
6.01	Submittal & Datasheets.			A	L		I
6.02	Procurement.			A	L		I
6.03	Installation.			A	L		I
6.04	Setup and/or Calibration.			A	L		I
7.00	**Process Start-up**						
7.01	Pre-operation and component test.	W	A	A	L		I
7.02	Loop checkout.	W	A	A	L		I
7.03	System Acceptance Test (SAT).	W	A	A	L		I
7.04	Operational Testing.	W	A	A	L		I
7.05	Commissioning Testing.	L	A	A	A		O
8.00	**Process Closeout**						
8.01	Redline Drawings and/or Electronic files submit to Owner.			A	L		I
8.02	As-builts (record set) - Update All Drawings.			A	L		I
8.03	Operation and Maintenance Manuals.			A	L		I
8.04	Operational Testing and Commissioning Sign Off Forms.	W	W	A	L		I
8.05	Training.	W		A	L		I
8.06	Commissioning (process performance testing).	L	A	A	A		O

Key: L – Lead, A – Assist, S – Support, W – Witness

3.04 ERECTION, INSTALLATION, APPLICATION, CONSTRUCTION (NOT USED)

3.05 REPAIR/RESTORATION (NOT USED)

3.06 RE-INSTALLATION (NOT USED)

3.07 COMMISSIONING

A. As specified in Section 01756 - Commissioning.

B. Owner Training:
  1. Demonstration requirements are specified in Section 17950 - Testing, Calibration, and Commissioning.
  2. General:
    a. Provide system maintenance and operator training courses for all the instrumentation and control systems furnished.
    b. Provide system maintenance and operator training courses for all the instrumentation and control equipment and systems furnished, as described below.
      1) All training described below shall be provided by the Contractor.
    c. Conduct all training at the Project Site unless another location is accepted by the Engineer and Owner:
      1) Include instruction on the use of all maintenance equipment and special tools provided under the Contract.
    d. Tailor training classes to the specific needs of the class participants:
      1) Develop separate courses for operators, maintenance staff, and supervisors:
        a) The specific categories and number of personnel in each category are identified below.
      2) Furnish training courses that are a combination of classroom and hands-on training:
        a) To the greatest extent possible, utilize components from the Owner's PCS system.
        b) Limit classes that include extensive hands-on activities to a maximum of 5 students per class.
      3) Present the minimum number of sessions, specified in Table 1, for each course in order to satisfy class size restrictions and limitations scheduling Owner staff.
      4) Furnish additional sessions if required to accommodate the total number of personnel identified for each course.
    e. Schedule individual training classes:
      1) Coordinate with the Owner at least 3 weeks before the start of the class:
      2) Schedule training classes Monday - Friday between 7:30 a.m. and 3:30 p.m.
      3) Each individual daily training session, travel time excluded:
        a) Minimum duration of 4 hours.
        b) Maximum duration of 7 hours.
        c) Breaks scheduled at least every 90 minutes and 1 hour for lunch.
      4) Complete training for maintenance personnel 90 days before Process Operational Period.

            5) Complete operator training classes before process start-up of the control system software, or any part of it:
                a) As specified in the Sequencing article of this Section.
            6) Schedule follow-up training classes after the PCS start-up on a schedule determined by the Owner.
        f. Instructor qualifications:
            1) Highly qualified training instructors for technical training with demonstrated expertise in not only control system functionality but also professional training techniques:
                a) Instructor qualifications are subject to the approval of the Engineer.
            2) Furnish training instructors thoroughly familiar with the PCIS system, who are members of the implementation team.
            3) One of the individuals conducting the PCIS training course must be the same individual responsible for the majority of the programming that was performed for the instrumentation and control system.
    3. Training manuals and materials:
        a. Furnish training manuals and other materials for training courses.
        b. Manuals are to be professionally written to present the course material in a format that is easy to comprehend.
        c. The manuals are to serve as teaching aids during presentation of the training classes.
        d. Manuals are to serve as reference material after the training has been completed.

Table 1

Course Title	Minimum Course Length (hours per session)	Personnel (Estimated Number of Students)	Minimum Number of Sessions
System Overview	1	10	1
Operator Training	2	10	1
PLC Hardware	1	10	1
Control Panel Troubleshooting	1	10	1
Network Equipment	1	10	1
Instrument Training	1	10	1
Analytical Instrument Training	1	10	1

    4. Training course requirements:
        a. System overview training:
            1) Furnish training courses that give the Owner's supervisory level personnel an overview of all elements of the PCIS system that focus on the overall functional aspect of elements of the control system and provide an understanding of the interaction of the various components.
            2) Furnish a training course that gives the Owner's supervisory level personnel an overview of the new Contractor-provided elements of the PCIS system. Focus on the overall functional aspects of each

new elements of the control system, particularly the mechanical system vendor-provided control packages.

- b. Operator training:
  - 1) Furnish training courses that instruct system operators in the efficient operation of all aspects of the PCIS that include not only the general operation of the control system but also the operation of specific system features.
  - 2) Furnish training courses that instruct system operators in the efficient operation of Contractor-provided aspects of the PCIS that include not only the general operation of each control system but also the operation of specific system features.
  - 3) Operator's training shall include the following for each vendor package and programmable device:
    - a) Control system overview: Architecture, equipment functions, software components, etc.
    - b) Display navigation, overview, and types of displays.
    - c) Process and equipment monitoring and control: Basic principles and operation.
    - d) Logging ON and OFF the system and description of the security and access system.
    - e) Alarm subsystem.
    - f) Trending: Provide a thorough session on how to use all trending functions.
    - g) Reports: How to access, print, and review content.
    - h) Control strategies: Present a review of each control strategy, including a hands-on demonstration of screens and operator functions for each.
    - i) Instruction on the use of all operational functionality alarm logging, trending, displays, database, reports, and control software developed for the Project and incorporated in the installed PCIS system.
- c. PLC hardware training:
  - 1) Furnish training on PLC hardware and on related components, including battery backup equipment, UPSs, LOI hardware, control circuits, and analog circuits.
  - 2) Furnish training on PLC hardware principles, product features, proper installation, operation, troubleshooting, and maintenance.
  - 3) PLC training may be provided by manufacturer's certified trainers.
- d. Network equipment training:
  - 1) Furnish basic training on all network hardware, switch and router configuration and software, and network monitoring software.
  - 2) Include a detailed description and explanation of the installed network architecture, media, and functions.
  - 3) Furnish an overview of the function and operation of each piece of network equipment.
  - 4) Furnish training on network maintenance troubleshooting and repair.
  - 5) Furnish training on how to install spare or off-line backup equipment.
  - 6) Basic network overview:
    - a) Discuss a basic network overview for each site.
    - b) Discuss the architecture (loop, star, etc.), media redundancy, and items that are not readily apparent to staff.

            - c) Discuss how to monitor the network health through the HMI network screen.
            - d) Discuss both enterprise level networks, the PCS communications network, and the field network.
        - 7) Ethernet switches:
            - a) Discuss the various types of switches (Layer 2, Layer 3, etc.).
            - b) Discuss switch health monitoring through the HMI.
            - c) Discuss the VLAN configuration (what ports should be used for what network, etc.).
            - d) Discuss testing procedures.
    - e. Instrumentation training:
        - 1) Furnish training covering all instruments and control panels.
        - 2) Furnish the specified quantity of training, allocated to cover new instruments and hardwired controls as specified in this Section and specifically determined in the accepted training plan.
        - 3) Train maintenance staff in the use, cleaning, calibration, maintenance, and troubleshooting of all the instruments furnished within this Project.
        - 4) Furnish training on the operation of new hardwired controls.
    - f. Analytical instrument training:
        - 1) Furnish training covering all analytical instruments.
        - 2) Furnish the specified quantity of training, allocated to cover new analytical instruments as specified in this Section and specifically determined in the accepted training plan.
        - 3) Train maintenance staff in the use, cleaning, calibration, maintenance, and troubleshooting of all the analytical instruments furnished within this Project.
        - 4) Provide training by manufacturer.

3.08 FIELD QUALITY CONTROL

- A. Inspection:
    - 1. Allow for inspection of PCIS installation as specified in Section 01450 - Quality Control.
    - 2. Provide any assistance necessary to support inspection activities.
    - 3. Engineer inspections may include, but are not limited to, the following:
        - a. Inspect equipment and materials for physical damage.
        - b. Inspect installation for compliance with Drawings and Specifications.
        - c. Inspect installation for obstructions and adequate clearances around equipment.
        - d. Inspect equipment installation for proper leveling, alignment, anchorage, and assembly.
        - e. Inspect equipment nameplate data to verify compliance with design requirements.
        - f. Inspect cable terminations.
        - g. Inspect/witness instrument calibrations/verifications.
    - 4. Inspection activities conducted during construction do not satisfy inspection requirements specified in Section 17950 - Testing, Calibration, and Commissioning.

- B. Instrument Installation Inspection:
    - 1. Provide any assistance necessary to support inspection activities.

2. Inspections may include, but are not limited to, the following:
    a. Inspect equipment and materials for physical damage.
    b. Inspect the installed arrangement, lay lengths, orientation, piping obstructions, etc., that could affect the instruments accuracy or repeatability.
    c. Inspect installation for compliance with Drawings and Specifications.
    d. Inspect installation for obstructions and adequate clearances around equipment.
    e. Inspect equipment installation for proper leveling, alignment, anchorage, and assembly.
    f. Inspect equipment nameplate data to verify compliance with design requirements.
    g. Inspect cable terminations.
    h. Inspect/witness instrument calibrations/verifications.
3. Inspection activities conducted during construction do not satisfy inspection requirements specified in Section 17950 - Testing, Calibration, and Commissioning.
4. Field acceptance testing: (Functional Testing) is specified in Section 17950 - Testing, Calibration, and Commissioning. Additional general requirements are specified in Section 01756 - Commissioning.

C. Installation supervision:
    1. Ensure that the entire PCIS is installed in a proper and satisfactory manner. At a minimum, the ICSC shall provide the following services:
        a. Installation resources:
            1) Coordinate with the Contractor regarding installation requirements of the Contract Documents.
        b. Provide technical assistance to installation personnel by telephone:
            1) Furnish installation personnel with at least 1 copy of the accepted submittals, including all installation details.
        c. Periodic inspections during the construction period.
        d. A complete check of the completed installation to ensure that it is in conformance with the requirements of the equipment manufacturer and the Contract Documents.
        e. Field verify accuracy and calibration of all instruments.

3.09 ADJUSTING

A. Control valves:
    1. Stroke all control valves, cylinders, drives and connecting linkages from the control system as well as local control devices and adjust to verify proper control action, hand switch action, limit switch settings, torque settings, remote control actions, and remote feedback of valve status and position.
    2. Check control valve actions and positioner settings with the valves in place to ensure that no changes have occurred since the bench calibration.

B. Make all revisions necessary to the control system software, as directed by the Engineer.
    1. It is understood that the Contractor knows and agrees that changes will be required in the control system software during the Source Testing, Functional Testing, Process Operational Period, Process Start-Up, and during the Project Correction Period.

3.10 CLEANING

A. As specified in Section 01770 - Closeout Procedures.

B. Vacuum clean all control panels and enclosures before process start-up and again after final completion of the project.

C. Clean all panel surfaces.

D. Return to new condition any scratches and/or defects.

E. Wipe all instrument faces and enclosures clean.

F. Leave wiring in panels, manholes, boxes, and other locations in a neat, clean, and organized manner:
   1. Neatly coil and label all spare wiring lengths.
   2. Shorten, re-terminate, and re-label excessive spare wire and cable lengths, as determined by the Engineer.

G. As specified in other sections of the Contract Documents.

3.11 PROTECTION

A. Protect all Work from damage or degradation until date of Substantial Completion.

3.12 SCHEDULES (NOT USED)

END OF SECTION

THIS PAGE INTENTIONALLY LEFT BLANK

SECTION 17100

CONTROL STRATEGIES

PART 1 GENERAL

1.01 SUMMARY

A. Section includes:
   1. Contractor-developed loop description submittal requirements.
   2. General programming requirements.
   3. Common control functions:
      a. General control and monitoring functions to be provided throughout the PCS system.
         1) These requirements apply to all systems and supplement the specific loop descriptions in Section 17101 - Specific Control Strategies and information indicated on the Drawings.

1.02 REFERENCES

A. As specified in Section 17050 - Common Work Results for Process Control and Instrumentation Systems.

1.03 DEFINITIONS

A. As specified in Section 17050 - Common Work Results for Process Control and Instrumentation Systems.

B. Hardwired control: Control circuitry that does not utilize software to initiate functionality.

C. Hardwired interlocks: A safety or protective feature that will interrupt operation of the equipment in all operating modes with no required operator intervention.

D. Software interlocks: A safety or protective feature that will interrupt operation of the equipment when the PLC has control.

E. Slew rate: Rate of change in respect to time.

F. Clamp: Imposed upper and lower limits on setpoints to eliminate entries outside the allowable control parameters.

G. Watchdog timer: Timers imposed to test components such as discrete I/O to verify the health of the card.

1.04 SYSTEM DESCRIPTION (NOT USED)

1.05 SUBMITTALS

A. As specified in Section 17050 - Common Work Results for Process Control and Instrumentation Systems.

1.06 QUALITY ASSURANCE (NOT USED)

1.07 DELIVERY, STORAGE, AND HANDLING (NOT USED)

1.08 PROJECT OR SITE CONDITIONS (NOT USED)

1.09 SEQUENCING (NOT USED)

1.10 SCHEDULING (NOT USED)

1.11 WARRANTY

A. As specified in Section 17050 - Common Work Results for Process Control and Instrumentation Systems.

1.12 SYSTEM START-UP (NOT USED)

1.13 OWNER'S INSTRUCTIONS (NOT USED)

1.14 COMMISSIONING (NOT USED)

1.15 MAINTENANCE (NOT USED)

PART 2 PRODUCTS

Not Used.

PART 3 EXECUTION

3.01 EXAMINATION (NOT USED)

3.02 PREPARATION (NOT USED)

3.03 INSTALLATION (NOT USED)

3.04 ERECTION, INSTALLATION, APPLICATION, CONSTRUCTION

A. As specified in Section 17050 - Common Work Results for Process Control and Instrumentation Systems.

B. General programming requirements:
   1. Use variable names or aliases derived from tag and loop identification on the P&IDs for all process values.
      a. Submit names for Owner approval.
      b. Unless otherwise noted, utilize floating-point format for all PLC algorithms and calculations.
      c. Provide PLC logic to convert raw input values into engineering units in a floating-point format.

2. Store all adjustable parameters in the PLC and configure so that an operator with sufficient security access can change the parameters from the LOI or HMI. Update and display the current value at all locations, regardless of where the last change was made.
3. Reusable PLC code blocks:
    a. Owner will provide standard user defined function blocks (UDFBs) and user-defined types (UDTs) for PLC programming. Utilize these standards wherever possible in PLC programming.
    b. Develop and use new standard user defined function blocks (UDFBs) and user defined types (UDTs) where appropriate. One instance of each standard code block shall reside in each PLC and shall be referenced in main routines and subroutines.
    c. New code blocks that the Contractor would like to use as a standard shall be submitted to Owner for review and approval.
4. Reusable SCADA HMI widget and graphics:
    a. Owner will provide standard widgets that are associated with UDFBs to be used in HMI develop.
    b. Owner has an existing SCADA HMI standard based on their existing graphics. Owner's existing graphical standards must be used for all HMI programming. The ICSC is responsible for obtaining information on Owner's graphical standards before developing applications
5. Documentation:
    a. All control logic shall be completely annotated including all rungs, instructions, and tags.
    b. Each routine shall have a title and a detailed description of the control strategy represented by the control logic. Where parameters are passed to the routine, all parameters shall be defined in the routine description.
    c. Analog tag descriptions representing process variables shall include the engineering unit range of the analog variable.
    d. Digital tag descriptions shall include the On and Off state labels.
    e. Complete, grammatically correct sentences and terminology, consistent with water treatment processes, shall be utilized in the development of rung and routine descriptions.
    f. All equations developed in the process logic shall be fully documented in the rung or routine description. A description of each constant and variable utilized in the equation shall be defined including engineering units.
6. Program slew rates for setpoints as needed to limit the effect of updated setpoints on the process:
    a. Provide for control setpoints and manual speed and position selections.
    b. Store new setpoints in one register, and gradually ramp the actual setpoint register at the slew rate until it reaches the new value.
    c. Provide operator access to change slew rates from the HMI.
7. Saved setpoints:
    a. Provide an operator selection to save all setpoint values.
    b. Furnish 1 or more screens at the HMI that display the initial values for all setpoints defined during start-up and the value for each setpoint the last time they were saved.
    c. Where possible use a DFB or AOI to provide an operator selection to restore all setpoints to the initial start-up value.
    d. Provide an operator selection to restore all setpoints to the last saved value.

8. Store a copy of all adjustable parameters and accumulated and integrated totals in PCS:
    a. Upon re-loading of the PLC program, re-load these values to the PLC from PCS or processor memory card.
9. Calculated values:
    a. Program calculations such that division by zero errors cannot occur.
    b. Prevent calculations from generating values that exceed the limits of the equipment or data type structures (integers) internal to the PLC.
    c. Configure counting functions (start counts and operation counts) to allow a minimum of 10,000 counts, and to roll-over to zero at an even decimal interval (1 followed by 4 or more zeros).
    d. Configure integrating functions to accurately accumulate the maximum rate from the instrument/equipment (totalizers, run time meters) for 30 years. Utilize manufacturer AOI/DFBs etc. where possible.
10. Timers:
    a. Provide programmable settling and proving timers in control sequences as required for starting and stopping of equipment to allow the process to settle down before proceeding with any additional control functions.
        1) The settling timers may be overridden by setting the timer to 0 seconds.
11. Control panel status:
    a. Design the PLC system to function as a stand-alone unit that performs all of the control functions described in this Section completely independent from the functions of the PCS system PC-based operator interfaces:
        1) Failure of the PCS system shall not impact data acquisition, control, scaling, alarm checking, or communication functions of the PLC.
    b. Furnish a minimum of 1 screen that depicts the status of all enclosures containing PLCs, communication equipment, UPS or I/O in the control system, including but not limited to the following:
        1) PLC cabinet over-temperatures from high temperature switch.
        2) Intrusion status on all enclosures equipped with intrusion switches.
        3) AC power failure:
            a) Monitor ahead of UPS.
        4) DC power supply failure:
            a) For redundant power supplies, alarm when either power supply or the diode bridge fails.
        5) UPS failure signal.
        6) UPS Low Battery signal.
12. PLC system communication status:
    a. Furnish a minimum of 1 screen to display all communication errors and status within the PCS:
        1) Communication between PCS and PLCs, PLC to PLC, PLC to RIO and PLC and or PCS to VCP.
        2) Display status of each node, and summary of failures over the past 60 minutes.
    b. Generate a communications alarm if any communication fault is detected or there is no response from a node for more than a user specified time.
    c. In the event of communications loss:
        1) Continue normal operation at each PLC.

2) Where control parameters are received over a communications link:
   a) If a link fails where process elements use the remote value for closed-loop control, hold operating status, speed and position, of the process elements at their last state before the communication alarm, unless other I/O local to that PLC indicates shutdown or over-ride conditions:
      (1) Ensure that the operator can control the process using PCI\S HAND mode at the local LOI.
   b) If a link fails where process elements use the remote value to determine setpoints, continue to operate using the last value received:
      (1) Provide a manual over-ride entry at the local LOI to allow an operator to enter a different value for any such remote signal.
      (2) Generate an alarm whenever an over-ride value is in use.

C. Common control functions:
   1. Incorporate common control functions into all control loops and devices and into the control programming, whether or not specifically shown in the specific control descriptions or elsewhere in the Contract Documents.
   2. Alarms:
      a. Generate alarms within the PLC logic.
      b. Indicate alarms at the LOI and HMI. Enable acknowledgement from either the HMI or the LOI.
      c. Generate high, high-high, low, and low-low level alarms where indicated:
         1) Provide an alarm reset deadband for each analog value to prevent excessive repeated alarms.
         2) Provide logic and timers to inhibit analog alarms based on process events. For example, inhibit low flow alarms when a pump is stopped, or has not been running long enough to establish flow.
      d. Flash all alarm and fail conditions and their respective indicators on the PCS graphic screens and local indicating lights until the condition is acknowledged by the operator, even if the alarm condition is no longer present.
      e. Once the alarm is acknowledged by an operator, display alarm conditions in a steady state (not flashing) while the alarm condition is still present:
         1) Flash with a cycle rate of 1/2 second on and 1/2 second off.
      f. Once the alarm has been cleared and the operator has acknowledged the alarm or fail condition, turn the graphic alarm indicator off.
      g. For all alarms that do not have inherent timers, provide an operator-adjustable proving timer to limit nuisance alarms, continuously adjustable from zero seconds to 100 minutes. The initial setting of proving timers shall be zero seconds:
         1) The PLC shall start the timer when it first detects an alarm condition and shall only activate the alarm after the timer has expired.
         2) If the alarm condition clears while the timer is running, the timer shall reset, and the alarm shall not be activated.
      h. Use interlocks and proving timers to prevent alarms from operating due to power loss, except for loss of power alarms.
      i. Furnish an alarm silence pushbutton at each PCM, LOI, or LCP with an audible alarm to signal the PLC to turn off the audible alarm until the next alarm occurs.

- j. Call Out alarms that are not acknowledged after a setpoint period of time shall activate the auto dialer feature of the HMI.
- k. Lamp test: Furnish lamp test pushbuttons at each control panel with more than 10 pilot lights, that illuminates all pilot lights on the panel:
  - 1) The lamp test may sequence through blocks of lights.
  - 2) Minimum on time for each lamp during lamp test 15 seconds.
- l. Horns and beacons:
  - 1) Activate PCM horn and beacon on all critical alarms and on other alarms as defined by the Facility Alarm Philosophy.
  - 2) Deactivate PCM horn and beacon when PCM reset pushbutton is activated.
  - 3) Silence PCM horn when PCM silence pushbutton is activated.
- m. Dual analog instruments:
  - 1) For applications where 2 or more analog instruments are measuring the same process variable:
    - a) Generate an operator adjustable percent deviation alarm.
    - b) Allow operator to take each instrument out of service when an instrument is out of service.

3. Where a reset is shown for counts, totals and times maintained in the PLC:
   - a. Provide a reset selection on the HMI screen that displays the value.
   - b. Provide a preset function on the HMI to allow an operator-entered value to become the current accumulated total.
   - c. Limit access to the reset and preset functions to operators with suitable security level.
   - d. Log the value before reset, operator, time, and date of reset in the PCS archive.
   - e. Log the value before preset, preset value, operator, time, and date of preset in the PCS archive.
4. Where start counts are indicated on the Drawings, or required in this Section, count starts for each piece of equipment (off to on transitions of running status) in the PLC:
   - a. Display total starts on PCS screens and provide a reset function.
   - b. Where indicated, calculate number of starts for each day:
     - 1) Display current day and previous day starts on PCS displays.
     - 2) Do not reset daily start count when overall count is reset.
     - 3) Archive starts for each day through PCS.
5. Where run time accumulation is indicated on the Drawings, or required in this Section, integrate accumulated run time to the nearest 0.1 hour whenever the running status input indicates that the equipment is running:
   - a. Display total run time in hours on PCS screens.
   - b. Where indicated, calculate total run time for each day:
     - 1) Display current day and previous day run time on the HMI to the nearest 0.1 hour.
     - 2) Do not reset daily run time when overall time is reset.
     - 3) Archive run time for each day through PCS.
6. For all monitored analog values:
   - a. Convert all values to engineering units in floating-point format within the PLC.
   - b. Maintain trends in PCS.
     - 1) Display minima and maxima on the HMI, and archive through PCS.
   - c. Flows and Weights:
     - 1) Totalize flows in the PLC logic:

            2) Where totalized flows are input to a discrete input, count input pulses and multiply by the volume per pulse.
            3) Where no totalizer input is shown, integrate the analog input over time.
            4) Display totals on the HMI and LOI.
            5) Archive totals to the historical database through PCS.
        d. Generate an alarm whenever an over-ride value is in use.
        e. Calculate hourly, daily, and monthly averages:
            1) Calculations shall be performed by the PLC.
            2) Display averages on the HMI, and archive through PCS.
            3) Display minima and maxima on the HMI, and archive through PCS.
        f. Calculate minimum and maximum values each day, and month:
            1) Calculations may be performed by the PLC or PCS.
            2) Display minima and maxima on the HMI, and archive through PCS.
        g. Generate an alarm whenever an over-ride value is in use.
    7. Analog data processing:
        a. Engineering units conversion:
            1) Use engineering units for all analog point values. Convert analog inputs to engineering units.
        b. Analog magnitude checking:
            1) Provide upper and lower limits to prevent operator-entered values (setpoints, etc.) from falling outside acceptable limits.
        c. Analog value quality:
            1) Monitor analog values received at each PLC from analog inputs or communications from another PLC or RIO specific to critical analog values, and generate alarms for the following conditions:
                a) Rate of change in excess of acceptable limit:
                    (1) Provide a separate rate limit for each value.
                b) Stale value:
                    (1) For analog signals that come from analog inputs or calculations using analog inputs, which are expected to have some variation each time the input is read, alarm when there is no change in the value for 10 times the normal expected scan or communication update.
    8. Analog device override (LOI and HMI):
        a. Provide the following functions from the HMI and the local LOI all controlling analog input:
            1) An over-ride value to be used in place of the analog input:
                a) Enter in engineering units:
                    (1) Display the calibrated range in engineering units.
                    (2) Only allow entries within the calibrated range of the instrument.
                b) When the analog input is enabled, track the analog input so that the over-ride matches the analog input value when the input is initially disabled.
                c) Maintain over-ride status and value in the PLC.
                d) Only allow access to over-ride selections and settings to operators with sufficient security.
            2) An enable/disable selection:
                a) When enabled, the value used by the PCS system is equal to the analog input value.

            b) When disabled, the analog input is ignored, and the over-ride value is used for all control and display functions.
            c) Generate an alarm whenever an analog input is disabled.
            d) Enter a value for the analog input from the PCS system to the PLC.
        3) Use the over-ride value for all display and control functions instead of the actual analog input value.
    b. Provide the following functions in the PLC, with selections and value entry from the HMI and/or LOI:
        1) An over-ride value to be used in place of the normal output value:
            a) Enter in percent of output span.
            b) When the analog output is enabled, track the analog input so that the over-ride matches the analog output value when the output is initially disabled.
        2) An enable/disable selection:
            a) When enabled, the value sent to the output is the value determined by the PLC based on the control logic or operator-entered value in PCS HAND.
            b) When disabled, the calculated PCS HAND values are ignored, and the over-ride value is sent to the output.
            c) Generate an alarm whenever an analog output is disabled.

9. Tank and vessel levels:
    a. Display all tank and vessel levels as both a level (typically in feet) and a volume (typically in gallons):
        1) Some individual displays may be only level or volume, when agreed to by the Owner and Engineer during screen meetings.
    b. Monitor rate of change of volume on all tanks and vessels:
        1) Establish the maximum withdraw rate at which the volume should decrease (all pumps or feeders operating at maximum output). Generate an alarm whenever the volume decreases faster than this rate.
        2) Establish the minimum fill rate at which the volume should increase when filling. Generate an alarm whenever the volume increases faster than this rate. Verify tank and vessel level is fluctuating to verify the validity of the IO register. If it is determined the register is not active or failed in a manner that leaves a stagnant value generate an alarm.
10. I/O filtering and processing:
    a. Analog input filtering:
        1) For each analog input provide an adjustable first order filter, for the purpose of smoothing out spikes and other noise for analog transmitter input signals. By default, configure analog inputs with no filtering affect.
        2) Monitor analog input signal quality:
            a) Over range: The input value is above the normal range (typically over 21 mA).
            b) Under range: The input value is below the normal range (typically under 3 mA, indicating a probable broken connection).
            c) Generate alarms for over or under range inputs.
            d) Do not use over or under range values for control or calculation purposes:

            (1) Where a second instrument is provided to monitor the same condition (a redundant instrument, or additional instruments furnished for averaging or different operating modes), and has a valid signal, use that input for control.
            (2) Otherwise, hold all outputs affected by the signal at their last values before the signal went out of range.
    3) Digital input filtering (proving timer):
        a) Provide an adjustable time delay function (0 to 10 seconds) on discrete input for the purpose of de-bouncing.
        b) By default, discrete inputs shall be configured with de-bounce timers set to zero seconds.

11. Instrument scaling (HMI/LOI):
    a. Provide 1 or more maintenance screens to display ranges and trigger points for all field instruments:
        1) For analog instruments, use input scaling values in the PLC to determine minimum and maximum calibration points.
12. PCS HAND-OFF-AUTO:
    a. Where indicated, provide HAND-OFF-AUTO and START-STOP selections in the PCS, accessed from an LOI or HMI for operators with sufficient security, to provide the following operating modes:
        1) PCS AUTO: The normal, automatic control mode of the strategy which allows full PLC control in response to process conditions and programmed sequences.
        2) PCS HAND: Enables PCS Manual control where control decisions are made by an operator through the PCS START-STOP, OPEN/CLOSE, or other selections as indicated.
        3) PCS OFF: Automated PCS control is disabled and PLC calls for all associated equipment to stop and valves to close or go to their identified safe state.
        4) Program the PLC so that switching a strategy between AUTO and HAND (either direction) occurs with a smooth transition. Keep running or position status unchanged when control is switched to HAND until a change is requested using the operator selections (START, STOP, OPEN, CLOSE). Keep running and position status unchanged when control is switched to AUTO until the control logic determines a change is required.
13. Display the current status of all operator selections (PCS HAND/AUTO, PCS START/STOP, etc.) on LOI and HMI.
14. Interlocks:
    a. Implement software interlocks where indicated to place equipment in a safe condition in response to impending hazardous process conditions. Apply software interlocks when equipment is operating in PCS AUTO or PCS HAND:
15. Permissives:
    a. Implement software permissives where indicated to prevent equipment from starting in an unsafe condition.
    b. Apply software permissives when equipment is operating in PCS AUTO or PCS HAND.
16. Process control algorithms:
    a. Jog and hold: Unless otherwise indicated, use jog and hold control algorithms where possible:

        1) When the error between process variable and setpoint is beyond a setpoint deadband:
            a) Jog valve or ramp speed in the required direction for a preset “Jog Time” or until the process variable reaches or passes the setpoint.
            b) Then hold speed or position through a setpoint “Hold Time.”
            c) Continue alternating jog and hold until the error is less than the deadband.
        2) Provide operator access to Jog Time and Hold Time setpoints from the HMI.
    b. PID algorithms: Use where indicated, or where necessary to provide fast response:
        1) Provide a PID faceplate with the following displays and functions for each PID control algorithm:
            a) Display Output, CV.
            b) Display Setpoint, SP.
            c) Display Process Variable, PV.
            d) Allow for operator selection of Automatic or Manual control of the output.
            e) Under Manual control of output allow the operator to enter the desired output value.
            f) Allow for input of the 3 Proportional, Integral, and Derivative tuning parameters.
            g) Configure PID loops to prevent reset windup when controlled equipment is operating in Manual (local or PCS), or when the equipment has reached a physical limit.
            h) When controlled equipment is being operated in remote PCS HAND, configure the PID function to track the process variable to provide a smooth transfer between Manual and Automatic modes.
            i) Provide selectable slew rates with adjustable setpoints to allow the PID algorithm to slowly ramp to its final value to minimize system disturbance.

17. Equipment alternating and sequencing:
    a. Distribute number of starts and run time equally between identical equipment.
18. Motor control:
    a. Monitor the device’s LOCAL-OFF-REMOTE (LOR) switch (the hard-wired switch at the MCC, drive or equipment) to determine when the PLC has control of the associated equipment:
        1) Display current REMOTE status on the PCS screens.
    b. Monitor the device’s running status from the starter auxiliary or run status input:
        1) Display the current status (running or stopped) on the PCS screens.
        2) Use status to calculate total run time and daily run time, and to count total starts and daily starts.
        3) Provide time stamp for each start.
        4) For motors 200 HP and greater, provide software to prevent exceeding the manufacturer’s recommended maximum starts per hour.

c. When equipment control has been given to the PLC as reported by the LOCAL-OFF-REMOTE switch, allow selection of PCS AUTO or PCS HAND control modes based upon operator selection using the PCS screens.

d. Starting, stopping and running when the device LOR is in LOCAL:
   1) With the LOR switch in the LOCAL position, the motor is controlled by the START and STOP pushbuttons.
   2) With the LOR switch in the OFF position, the motor is prohibited from running.
   3) With the LOR switch in the REMOTE position, the motor is controlled remotely.

e. Starting, stopping and running when the device LOR is in REMOTE:
   1) When the motor is expected to be running (PLC has issued a START or RUN due to process conditions or operator selection), LOR is in REMOTE, and the device is not reported to be running, start an operator adjustable “Control Activation” timer:
      a) Provide “Control Activation” timers for each piece of controlled equipment:
         (1) If the LOR and required running status do not change, and the PLC does not receive running status within the “Control Activation” time period:
            (a) De-activate the output.
            (b) Place the device in a “Failed” state.
            (c) Generate a “Failed to Respond” alarm.
   2) When the motor is not expected to be running (PLC has issued a STOP or removed the RUN output), LOR is in REMOTE, and the device is reported to be running, start the “Control Activation” timer:
      a) If the LOR and required stopped status do not change, and the PLC does not lose the running status within the “Control Activation” time period:
         (1) Keep the RUN output off or the STOP output on.
         (2) Place the device in a “Failed” state.
         (3) Generate a “Failed to Respond” alarm.
   3) Re-establish PLC control of a device in a “Failed” state only after the following:
      a) An operator turns the device’s LOR switch out of REMOTE, and back to REMOTE (i.e., REMOTE input to the PLC cycles off and back on).

f. Where motor winding high temperature switches or RTD temperature elements are shown, generate an alarm when high temperature is sensed (contact opens or temperature above the high alarm setpoint), but do not stop the motor unless otherwise indicated.

g. Motor equipped with current detection shall shut down and report a “failed” status on detection of high current.

h. Control two-speed motors similar to other motors, except as listed below:
   1) Motor states are RUN-FAST, RUN-SLOW, and STOP.
   2) Start all two-speed motors in the RUN-SLOW state. If or when the high speed is required (RUN-FAST operator selection or process conditions), transition to RUN-FAST after a designated time.

        3) When transitioning from RUN-FAST to RUN-SLOW, remove the RUN-FAST output or issue a STOP, then wait for a “Fast to Slow” time delay before energizing the RUN-SLOW or START-SLOW output.

i. Simultaneous starts:
    1) Prevent more than one motor-driven load 25 HP or larger in the same facility from starting concurrently:
        a) When starting one load, inhibit start logic for all other such equipment until the load being started is up to speed (RVSS or VFD), or after a setpoint time delay (full-voltage starters and miscellaneous equipment).

j. Speed control:
    1) Modulate speed on VFD-driven motors using jog and hold, or PID control algorithms to maintain process conditions as described in the specific loop descriptions.
    2) Operate speed control within a pre-defined range:
        a) Minimum speed as determined by equipment manufacturer. The higher of:
            (1) Minimum motor speed to maintain adequate cooling for the type of load driven (constant or variable torque).
            (2) Minimum equipment speed, such as minimum speed to deliver flow or to deliver minimum flow for equipment cooling or lubrication.
        b) Maximum speed 100 percent (60 hertz) or as identified by equipment manufacturer.
    3) Where multiple equipment may operate together to maintain the same process condition:
        a) Provide an operator selection for starting sequence.
        b) Start the first equipment at a preset starting speed.
        c) When 1 or more pieces of equipment is running and the speed control algorithm reaches a preset “Start Next” speed value (initially 95 percent of speed range) through a preset time delay:
            (1) Start the next available equipment at the preset starting speed.
            (2) Ramp up the started equipment and ramp down the previously running equipment to the mid operating speed (adjustable in the PLC). Determine preset values for each condition based on equipment and system characteristics to provide approximately the same total flow or process condition with the new load running at the mid speed (for example if 1 pump is running and the second pump will be added, then the total flow of both pumps running at mid operating speed should be approximately the same as flow of one pump at Start Next speed).
            (3) Once both equipment reach the mid operating speed, resume the speed control algorithm for those equipment.
            (4) Operate all equipment at the same speed following the output of the speed control algorithm.
        d) When 2 or more pieces of equipment are running, monitor for a “Stop Next” condition:

            - (1) Where flow rate is monitored, use a preset “Stop Next” flow rate for each possible number and combination of equipment:
                - (a) Determine initial “Stop Next” speed based on the flow that can be provided with one fewer piece of equipment running at a speed slightly below the “Start Next” speed.
            - (2) When the “Stop Next” condition exists through a preset time delay:
                - (a) Ramp speed of running equipment except for the equipment to be stopped up to a preset value based on the number of items running. Determine preset values for each condition based on equipment and system characteristics to provide approximately the same total flow or process condition with one fewer load running (typically slightly below the preset “Start Next” speed) while ramping speed of equipment to be stopped down to the preset minimum speed.
                - (b) Operate all remaining equipment at the same speed following the output of the speed control algorithm. Stop the load once it reaches minimum speed.

19. Gate and valve control:
    - a. Monitor the device’s LOCAL-STOP-REMOTE (LSR) switch(es) (the integral switch in the actuator or hard-wired switch at the local control station):
        - 1) Display current REMOTE status on PCS screens.
    - b. Start an “Open Activation” timer whenever the device is expected to be open (PLC has issued an OPEN command in PCS AUTO, or OPEN was selected in PCS HAND):
        - 1) Initially set “Open Activation” time to twice the normal opening time.
        - 2) If the LSR position and open command do not change, and the PLC does not receive fully open status feedback within the “Open Activation” time period:
            - a) De-activate the open output.
            - b) Place the device in a “Failed” state.
            - c) Generate a “Failed to Open” alarm.
    - c. Start a “Close Activation” timer whenever the device is expected to be closed (PLC has issued a CLOSE command in PCS AUTO, or CLOSE was selected in PCS HAND):
        - 1) Initially set “Close Activation” time to twice the normal closing time.
        - 2) If the LSR position and close command do not change, and the PLC does not receive fully closed status feedback within the “Close Activation” time period:
            - a) De-activate the close output.
            - b) Place the device in a “Failed” state.
            - c) Generate a “Failed to Close” alarm.
    - d. Limit the number of open/close /commands so that it does not exceed the manufacturer requirements.

e. For modulating valves (valves controlled from either a 4-20 mA signal or digital communications command) with position feedback, start a “Position Error” timer whenever the position feedback differs from the required position command by more than a setpoint error when the LSR is in REMOTE:
    1) For analog modulating devices, error is determined by position feedback differing from position command by more than the setpoint error.
    2) For discrete modulating devices, error is determined by feedback not changing in the correct direction, or changing at less than a setpoint rate, when the OPEN or CLOSE PLC output is active.
    3) Initially set the “Position Error” time to 60 seconds.
    4) If the LSR position does not change, and position error stays outside of the setpoint error through the “Position Error” time period:
        a) Place the device in a “Failed” state.
        b) Generate a “Position Fail” alarm.

f. Provide separate time delay settings for each function and for each device.

g. If the valve position inputs indicate an invalid state (i.e., valve open and closed at the same time), place the device in a “Failed” state and generate an “Invalid State” alarm.

h. Re-establish PLC control of a device in a “Failed” state only after 1 of the following:
    1) An operator turns the device’s LSR switch out of REMOTE and back to REMOTE (i.e., REMOTE input to the PLC cycles off and back on).
    2) An operator acknowledges the fault from PCS.

i. For all alarm conditions, control other devices (as stopping pumps, etc.) as stated in the individual loop descriptions to make the system safe.

j. For discrete modulating valves (valves positioned to intermediate positions to control process values through discrete OPEN and CLOSE outputs), count the number of actuations (OPEN or CLOSE commands) per hour in the PLC:
    1) Display count on the HMI.

20. Chemical systems (LOI/HMI):

a. Provide the following chemical system screens:
    1) Where one LOI manages more than one chemical system, a main menu screen that will allow the operator to access the individual chemical system screens using software keys.
    2) One or more screens for each individual chemical system controlled at that location, containing:
        a) All status displays (running, failed, etc.).
        b) Selections (lead/lag, which process flow to pace to, etc.).
        c) Setpoint entry and display.
        d) Calculated feed requirement (result of flow pacing calculation) in engineering units (typically milligrams of chemical per minute).
        e) Output signal to feeder in percent of full span.
        f) Actual chemical flow rate from flowmeter (where shown).
        g) Process flow rate(s) used to pace each chemical on the individual chemical screens (PROC FLOW):
            (1) Where different process flows can be selected for flow pacing, display and identify the selected source.

b. Chemical system calculations: Perform calculations as indicated on the Drawings and in the individual loop descriptions. Use the following assumptions, unless otherwise noted:
   1) Where chemical flow feedback is not used, assume feeder output is linear in response to control signal.
   2) Zero signal (typically 4 milliamperes) produces zero flow.
   3) Perform flow-pacing calculations using as indicated on the Drawings or described in the individual loop descriptions.

c. Provide the setpoints and selections indicated on the Drawings and in the individual loop descriptions. Typical setpoints include:
   1) QMAX: Maximum calibration value:
      a) Chemical flow rate measured from calibration column at maximum feeder output (typically in gallons of solution per hour or milliliters of solution per minute).
   2) CONC: Chemical concentration:
      a) The concentration of the chemical in the solution to be fed, in engineering units (typically milligrams of chemical per liter of chemical solution).
   3) DENSITY:
      a) Density of the chemical solution to be fed in engineering units or as a specific gravity.
      b) Used to calculate the concentration of the chemical in the solution.
   4) DOSE: Desired dosage:
      a) Desired chemical concentration in the process stream in engineering units (typically milligrams of chemical per liter of process fluid).
   5) FLOW SEL: Selection of process stream(s) for flow pacing.
   6) OPEN/CLOSED LOOP:
      a) Selection of method of controlling chemical flow-paced feed rate.
      b) OPEN LOOP: Signal to feeder is based on feeder calibration (QMAX) to deliver calculated chemical solution feed rate. Chemical solution flowmeter is not used for control.
      c) CLOSED LOOP: Chemical feed rate is directly controlled using the calculated chemical solution feed rate as the setpoint, and the flow rate from the chemical solution flowmeter as the process variable.

d. Chemical control algorithms:
   1) Flow pacing algorithm: Operator selects a desired dose and the control system adjusts the chemical feed rate to dose based on process flow, chemical concentration, and feeder calibration. The calculation is as follows (units may vary from those shown in the calculation below):

$$FEEDER\ FLOW\ (\frac{ml}{min}) = \frac{21.948 * DOSE\left(\frac{mg}{L}\right) * PROCESS\ FLOW(MGD)}{CONC\left(\frac{lb}{gal}\right)}$$

$$FEEDER\ FLOW\ (\%) = \frac{FEEDER\ FLOW(\frac{ml}{\min})}{QMAX(\frac{ml}{\min})}$$

2) Flow pacing with closed loop algorithm: Operator selects a desired dose and the control system adjusts the speed of the chemical feeder through a speed control signal to match the measured chemical feed rate to a flow rate setpoint. This flow rate setpoint shall be derived from the process flow and operator setpoints for dosage and concentration. The calculation is as follows (units may vary from those shown in the calculation below):

$$\boldsymbol{FEEDER\ FLOW\ (\frac{ml}{min}) = \frac{21.948 * DOSE\left(\frac{mg}{L}\right) * PROCESS\ FLOW(MGD)}{CONC\left(\frac{lb}{gal}\right)}}$$

a) Adjust the speed of the chemical feeder using a PID control algorithm to maintain the calculated FEEDER FLOW:
   (1) SP = Calculated FEEDER FLOW.
   (2) PV = Chemical Flow.
   (3) CV = Speed of the Chemical Feeder.

3) Flow pacing with analyzer trim algorithm: Operator selects a desired dose and desired analyzer setpoint band and the control system adjusts the chemical feed rate to dose based on process flow, chemical concentration, process analyzer output, and feeder calibration. The calculation is as follows (units may vary from those shown in the calculation below):

$$\boldsymbol{PRE\ TRIM\ FLOW\ \left(\frac{ml}{min}\right) = \frac{21.948 * DOSE\left(\frac{mg}{L}\right) * PROCESS\ FLOW(MGD)}{CONC\left(\frac{lb}{gal}\right)}}$$

$$\boldsymbol{TRIM\ MULTIPLIER = \frac{AI - \frac{1}{2}(QAH + QAL)}{-\frac{1}{2}(QAH - QAL)}}$$

CLAMP THE TRIM MULTIPLIER OUTPUT TO A MAXIMUM OF 1 AND MINIMUM OF -1.

$$\boldsymbol{TRIM\ ADDER\left(\frac{ml}{min}\right) = 0.10 * \frac{AI - \frac{1}{2}(QAH + QAL)}{-\frac{1}{2}(QAH - QAL)} * PRE\ TRIM\ FLOW\left(\frac{ml}{min}\right)}$$

$$\boldsymbol{FEEDER\ FLOW\left(\frac{ml}{min}\right) = PRE\ TRIM\ FLOW\left(\frac{ml}{min}\right) + TRIM\ ADDER\left(\frac{ml}{min}\right)}$$

$$FEEDER\ FLOW\ (\%) = \frac{FEEDER\ FLOW(\frac{ml}{\text{min}})}{QMAX(\frac{ml}{\text{min}})}$$

4) Flow pacing with closed loop and analyzer trim algorithm: Operator selects a desired dose and desired analyzer setpoint band and the control system adjusts the speed of the chemical feeder through a speed control signal to match the measured chemical feed rate to a flow rate setpoint. An additional control algorithm is used in the calculation to fine-tune the feed based on an analytical measurement as measured by the process analyzer.

$$\boldsymbol{PRE\ TRIM\ FLOW\ \left(\frac{ml}{min}\right) = \frac{21.948 * DOSE\left(\frac{mg}{L}\right) * PROCESS\ FLOW(MGD)}{CONC\left(\frac{lb}{gal}\right)}}$$

$$\boldsymbol{TRIM\ MULTIPLIER = \frac{AI - \frac{1}{2}(QAH + QAL)}{-\frac{1}{2}(QAH - QAL)}}$$

CLAMP THE TRIM MULTIPLIER OUTPUT TO A MAXIMUM OF 1 AND MINIMUM OF -1.

$$\boldsymbol{TRIM\ ADDER\left(\frac{ml}{min}\right) = 0.10 * \frac{AI - \frac{1}{2}(QAH + QAL)}{-\frac{1}{2}(QAH - QAL)} * PRE\ TRIM\ FLOW\left(\frac{ml}{min}\right)}$$

$$\boldsymbol{FEEDER\ FLOW\left(\frac{ml}{min}\right) = PRE\ TRIM\ FLOW\left(\frac{ml}{min}\right) + TRIM\ ADDER\left(\frac{ml}{min}\right)}$$

a) Adjust the speed of the chemical feeder using a PID control algorithm to maintain the calculated FEEDER FLOW:
  (1) SP = Calculated FEEDER FLOW.
  (2) PV = Chemical Flow.
  (3) CV = Speed of the Chemical Feeder.

21. Breaker status:
  a. Display the following data to the extent it is available from the specified device:
    1) Open.
    2) Closed.
    3) Tripped.
    4) Ground fault.
    5) Settings.
    6) Racked out.

22. Power Data:
    a. Retrieve data from:
        1) Power Quality Meters (PQMs) and Solid State Meters (SSMs) at 480V.
        2) Generator Master Control Panel.
        3) Digital bus networks, as indicated.
        4) Where shown and available, use Modbus TCP communications.
    b. Display the following data (to the extent it is available) from the specified device.
        1) Current XXXX.X A:
            a) A-Phase.
            b) B-Phase.
            c) C-Phase.
        2) Volts: XXXX.X V:
            a) A-Phase.
            b) B-Phase.
            c) C-Phase.
        3) Reactive power: XXXX.X kVAR.
        4) Real power: XXXX.X kW.
        5) Apparent power: XXXX.X kVA.
        6) Power factor: 0.XX.
        7) Energy: XXXXXXX kW*hr.
        8) Demand peak: XXXX Amp.
        9) Demand peak: XXXX kW.
    c. For engine/generator system monitoring, also display percent of rated output.
23. Power supply and distribution displays power quality meters display:
    a. In addition to the Power Data listed above, display the following (where available) from PQMs, SSMs, and Generator Master Control Panel:
        1) Frequency: Hertz.
        2) THD (current and voltage): up to 31st harmonic.
    b. Display the data in a 480V meter table that lists measurements from all power quality meters on the plant.
24. Digital bus Starters, RVSS and VFDs equipped with Modbus TCP communications:
    a. Communicate and display all values listed in the equipment specifications, indicated on the Drawings, or listed below.
    b. Communicate start and stop commands, and receive running feedback over the fieldbus network, unless shown as hardwired on the drawings.
    c. Provide data entry screen for the cost of electricity in dollars per (kw*hr), which will be used in calculations for display.
    d. Monitor the following additional values, and display on the HMI:
        1) Motor current, phase A, B, and C.
        2) Motor Torque.
        3) Power.
        4) Over current alarm.
        5) Under current alarm.
        6) Running status.
        7) Phase loss.
        8) Stall.
        9) Number of starts.
        10) History of past 5 trips.

- e. Calculate, indicate, historize, and trend, the following additional values:
    - 1) Full Load Amps (static value, Engineer will provide).
    - 2) Average Motor Operating Current.
    - 3) Run Time (Hours).
    - 4) Operating Hours (Hours/Year).
    - 5) Average Load Factor (equals Average Motor Current Operating Current/Full Load Amps) - *display as a percentage.*
    - 6) Annual Energy Use (kW*hr).
    - 7) Annual Operating Cost (dollars).
    - 8) Percent of Site Electric Use (equals Annual Energy Use/Sum of Annual Energy (kW*hr) values for all PQM meters).
- f. For Variable Frequency Drives:
    - 1) Speed command.
    - 2) Speed feedback.
- g. For RVSS, Variable Frequency Drives, and where otherwise shown or available, monitor the following over the digital bus network:
    - 1) Line voltage.
    - 2) Power.
    - 3) Power factor.
    - 4) Over voltage alarm.
    - 5) Under voltage alarm.
    - 6) Over current alarm.
    - 7) Under current alarm.
    - 8) Indicate, historize, trend, and alarm data as indicated in the ACS I/O Tables on the Drawings.

25. Calculate, indicate, historize, and trend plant-wide calculated values for kW for each MCC.
26. Instruments equipped with digital bus communications:
    - a. Communicate and display all values listed in the equipment specifications, indicated on the Drawings, or listed below:
        - 1) Instrument diagnostics.
        - 2) Communications health.
        - 3) Process variable.
        - 4) Alarm summary.
        - 5) All totalizers (if applicable).
        - 6) Indicate, historize, trend, and alarm data as indicated in the ACS I/O Tables on the Drawings.
27. Calculate, indicate, historize, and trend calculated values for additional, process-specific measurements. Algorithms will be provided by the Engineer.
    - a. Influent:
        - 1) Influent flows (diurnally) vs. time (mgd vs. hours for 2 weeks, running).
        - 2) Influent flows (daily vs. time (mgd vs. *day of the week* for 1 week, running).
        - 3) Influent flows (diurnally) vs. time (mgd vs. *month of the year* for the last 3 years, running).
28. Valves and gate operators equipped with digital bus communications:
    - a. Communicate and display all controls and data listed in the equipment specification, as indicated on the Drawings, or listed below:
        - 1) Open, close or direct position commands.
        - 2) Fully open and closed status.
        - 3) Position.

        4) High torque, overload and other applicable alarms.
        5) Indicate, historize, trend, and alarm data as indicated in the ACS I/O Tables on the Drawings.
    b. Establish initial torque curves using manufacturer's software for performance tracking and wear.

29. Power failure:
    a. Retain all operating setpoints during power failure.
    b. Restore plant operation to the state it was before the power loss:
        1) Store the operating state of all major equipment and systems in the PLC and retain the last state during a power loss.
    c. Provide an operator selection to permit the plant to re-start. Once re-start is selected:
        1) Allow plant loads to re-start and allow loads to sequence on and ramp up following normal control logic. Where loads were operating in PCS HAND, restore their operation to the state before the power loss.
        2) Use the logic described above for preventing concurrent starts to provide necessary delays between each start.
    d. Operating on generator power:
        1) Include running and starting kW and kVA requirements for each major equipment and system in registers in the PLC:
            a) Where running load can vary due to speed, valve position, etc., use the normal starting value plus 25 percent of the difference between the maximum and minimum values.
        2) Inhibit starting of loads from process control logic and from operator selection (in PCS HAND) that will exceed generator capability.
        3) Generate the following alarms:
            a) Generator near capacity: When measured kW or kVA reaches 90 percent of the rating of the generator.
            b) Generator at capacity: When measured kW or kVA reaches 95 percent of the rating of the generator.
            c) Unable to start: When an operator selects a load that would exceed generator starting or running capacity.
            d) Insufficient capacity: When the control system needs to start a load but is inhibited due to generator capacity.
        4) Whenever the Generator at Capacity alarm is active, inhibit starting of any loads, and inhibit increase in speed of all control loops, and other changes that would increase electrical load.
        5) Display the following power system data on the HMI and LOI in numerical and graphical formats:
            a) Available power.
            b) Current power demand.
            c) Capacity of the generator.
            d) Current power demand load as a percentage of capacity.
            e) Generator frequency.

30. Simple Network Management Protocol (SNMP) devices:
    a. Monitor SNMP devices using the SCADA HMI system SNMP driver.
    b. Provide new and edit existing SNMP monitoring screens for the following devices:
        1) Workstations:
            a) Online status.
            b) Hard drive space.

      - c) CPU utilization.
      - d) RAM utilization.
    - 2) UPS:
      - a) Online status.
      - b) Backup status.
      - c) Battery failure.
      - d) Battery charge level.
      - e) UPS failure.
    - 3) Network switches:
      - a) Online status.
    - 4) Cellular modems:
      - a) Online status.
      - b) RSSI.
      - c) Voltage.
      - d) Temperature.
  - c. Load each device's associated MIB file into the SNMP driver and associated tags with the correct MIB file variable and scale values as required.

3.05 REPAIR/RESTORATION (NOT USED)

3.06 RE-INSTALLATION (NOT USED)

3.07 FIELD QUALITY CONTROL (NOT USED)

3.08 ADJUSTING (NOT USED)

3.09 CLEANING (NOT USED)

3.10 DEMONSTRATION AND TRAINING

A. As specified in Section 17050 - Common Work Results for Process Control and Instrumentation Systems.

3.11 PROTECTION (NOT USED)

3.12 SCHEDULES (NOT USED)

END OF SECTION

SECTION 17101

SPECIFIC CONTROL STRATEGIES

PART 1 GENERAL

1.01 SUMMARY

A. Section includes:
   1. Loop descriptions:
      a. Specific control requirements and functional descriptions for individual control loops.

1.02 REFERENCES

A. As specified in Section 17050 - Common Work Results for Process Control and Instrumentation Systems.

1.03 DEFINITIONS

A. As specified in Section 17050 - Common Work Results for Process Control and Instrumentation Systems.

1.04 SYSTEM DESCRIPTION

A. Provide all programming necessary for a completely interfaced and coordinated control system for the Gibson Oaks Water Processing Facility as shown and specified.

1.05 SUBMITTALS

A. Develop detailed loop descriptions based on the information in the Contract Documents and submit as specified in Sections 01330 - Submittal Procedures and 17050 - Common Work Results for Process Control and Instrumentation Systems.
   1. For each control loop, provide a detailed functional description of the operation of the equipment, signals, and controls shown on the P&IDs:
      a. Include all functions depicted or described in the Contract Documents.
      b. Include the following within each loop description:
         1) All requirements specific to that loop.
         2) Common control requirements applicable to that loop.
         3) List of all ranges, setpoints, timers, values, counters, etc.
   2. Where there are similar loops with identical control, such as multiple loops for individual raw water pumps, only 1 loop description need be developed and the remaining loops may reference that loop description.
   3. Loop description format: As specified in this Section.

B. Loop number and title.
   1. References:
      a. List P&IDs that are specifically referenced.
   2. Abstract:

        a. General description of how the loop works, what devices are involved, and how the process will be controlled.
        b. Process values, setpoints, and limits, including units and ranges:
            1) Show span and range values for analog inputs and outputs, and operating point and deadband for discrete inputs.
    3. Hardwired control:
        a. Detailed description of the control functions at the local level.
        b. Function of local operator interfaces.
        c. Operation of hardwired field pilot controls:
            1) Pushbuttons.
            2) Selector switches.
            3) Potentiometers.
            4) Pilot lights, indicators, and other displays.
    4. Hardwired interlocks:
        a. Explanation of the operation of system interlocks and hardwired permissive conditions.
    5. PLC control:
        a. Detailed description of the control functions that are under control of the PLC.
        b. Operator controls and automatic controls.
        c. Setpoints, alarms, etc.:
            1) Include units and ranges for analog values.
            2) Include span and range for analog inputs and outputs.
            3) Include operating point and deadband for discrete inputs, and identify conditions where contacts are open, and when they close.
        d. Control sequences.
        e. Software interlocks:
            1) Operation of system software interlocks.
    6. PCS/LOI/HMI control:
        a. Detailed description of the operator controls.
        b. Setpoints, alarms, etc.
    7. Indicators and alarms:
        a. List any indicators and alarms specific to the loop that are not covered in the common control strategies.
    8. Failure modes:
        a. List any failure modes specific to the loop that are not covered in the common control strategies.

1.06 QUALITY ASSURANCE (NOT USED)

1.07 DELIVERY, STORAGE, AND HANDLING (NOT USED)

1.08 PROJECT OR SITE CONDITIONS (NOT USED)

1.09 SEQUENCING (NOT USED)

1.10 SCHEDULING (NOT USED)

1.11 WARRANTY (NOT USED)

1.12 SYSTEM START-UP (NOT USED)

1.13 OWNER'S INSTRUCTIONS (NOT USED)

1.14 COMMISSIONING (NOT USED)

1.15 MAINTENANCE (NOT USED)

PART 2 PRODUCTS

Not Used.

PART 3 EXECUTION

3.01 EXAMINATION (NOT USED)

3.02 PREPARATION (NOT USED)

3.03 INSTALLATION (NOT USED)

3.04 ERECTION, INSTALLATION, APPLICATION, CONSTRUCTION

A. Loop 10 - Raw Water:
  1. References:
    a. 10N01.
    b. 10N02.
    c. 10N03.
  2. Abstract:
    a. 4 raw water supply wells, and a future fifth well, provide water to the ground storage tank. Wells operate automatically in accordance with a well management table. Wells are located at the Gibson Oaks Water Processing Facility, Lake Gibson Well Site, and Sherwood Lakes Well Site.
  3. Hardwired control:
    a. Manual control at the pump:
      1) When Local/Off/Remote (LOR) handswitch (HSA-10-1, 2, 3, 4) is in the Local position then the well pump will be started under the following sequence.
        a) Starting the pump will start the pre-lube timer circuit and open the pre-lube solenoid valve, initially set to 5 minutes.
        b) After the timer has completed the pre-lube then the pump will be issued a start command.
        c) Selecting OFF for the LOR selector switch will stop the pump.
      2) When the LOR handswitch is in the Off position then the well pump is Off and cannot be started from the MCC or PLC.
      3) When the LOR handswitch is in the Remote position then the well pump is controlled by the MCC handswitches.
    b. Manual control at the MCC or starter:
      1) Manual control at the MCC is available when the local LOR at the pump is in the remote position.
      2) When the Hand/Off/Auto (HOA) handswitch at the MCC is in the Hand position then the well pump can be started or stopped using the Start and Stop Pushbuttons on the MCC.
        a) Selecting START pushbutton will start the pre-lube timer circuit and open the pre-lube solenoid valve, initially set to 5 minutes.

            b) After the timer has completed the pre-lube then the pump will be issued a start command.
            c) Pushing the STOP pushbutton or moving the HOA selector switch to the Off position will stop the pump.
        3) When the HOA handswitch at the MCC is in the Off position then the well pump is off and cannot be started by the PLC but can be started by the LOR handswitch at the pump.
        4) When the HOA handswitch at the MCC is in the Auto position then the well pump is controlled by the plant PLC.

4. Hardwired interlocks/overload programmed interlocks:
    a. High pressure from the pressure switch interlocked to stop pump in PLC control mode only.
    b. Low pressure from the pressure switch interlocked to stop pump in PLC control mode only.
5. PLC control:
    a. Manual control from the SCADA HMI:
        1) When the Manual/Auto selection at the SCADA HMI is in the Manual position then the well pump can be started or stopped using the On/Off pushbuttons on the SCADA HMI.
            a) Selecting On will start the pre-lube timer circuit and open the pre-lube solenoid valve, initially set to 5 minutes.
            b) After the timer has completed the pre-lube then the pump will be issued a start command.
            c) Selecting Off will stop the pump.
            d) PLC interlocks are in place for manual operation controlled through the PLC.
        2) When the Manual/Auto selection at the SCADA HMI is in the Auto position then the well pump is automatically controlled by the plant PLC.
    b. AUTO control from the SCADA HMI:
        1) When the Manual/Auto selection at the SCADA HMI is in the Auto position then the well pump is automatically controlled by the plant PLC as follows:
            a) Provide a well management table allowing the operator to assign each well to an operational group and schedule operational groups on a daily basis. All for up to 5 operational groups and allow wells to be assigned to more than 1 group. Include the following information on the well management table
                (1) Well number.
                (2) Groups assigned.
                (3) Percent of monthly withdrawal permit met (%).
                (4) Current month flow total (kgal).
                (5) Permitted flow (kgal).
                (6) Previous month flow total (kgal).
                (7) Current month runtime (HH:MM).
                (8) Current month number of Starts.
                (9) Current month average power draw (kW).
            b) Provide operational group scheduler to allow operator to select lead, lag, lag2, and lag3 group operation on a daily basis.

c) Provide well management table with similar functionality and information to the following meeting the Owner's requirements and standards for colors, fonts, indicators, and layout:

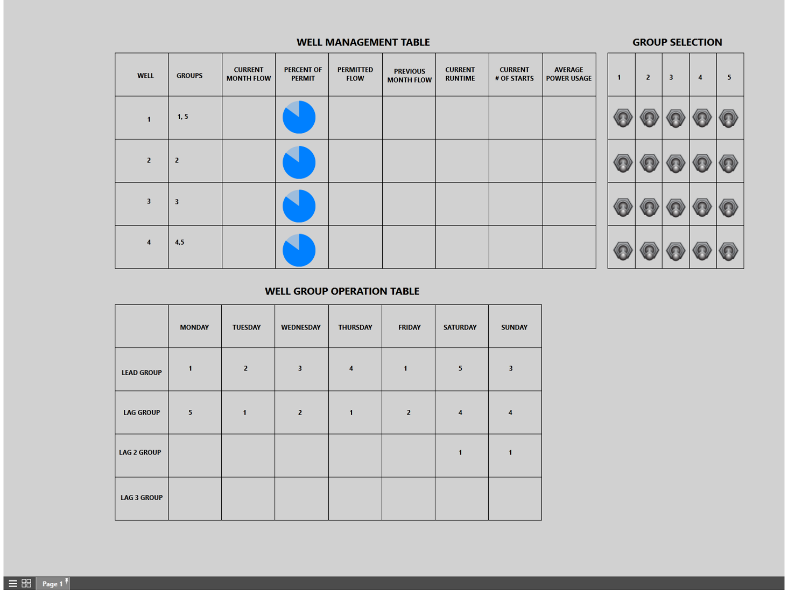

WELL MANAGEMENT TABLE

WELL	GROUPS	CURRENT MONTH FLOW	PERCENT OF PERMIT	PERMITTED FLOW	PREVIOUS MONTH FLOW	CURRENT RUNTIME	CURRENT # OF STARTS	AVERAGE POWER USAGE
1	1, 5		◕					
2	2		◕					
3	3		◕					
4	4,5		◕					

GROUP SELECTION

1	2	3	4	5
○	○	○	○	○
○	○	○	○	○
○	○	○	○	○
○	○	○	○	○

WELL GROUP OPERATION TABLE

	MONDAY	TUESDAY	WEDNESDAY	THURSDAY	FRIDAY	SATURDAY	SUNDAY
LEAD GROUP	1	2	3	4	1	5	3
LAG GROUP	5	1	2	1	2	4	4
LAG 2 GROUP						1	1
LAG 3 GROUP							

d) Control variable for the wells is the Ground Storage Tank level measured in feet by two level transmitters. Provide Operator Entry of the following well control variables:
   (1) Start Level - Entry in feet with 1 decimal.
   (2) Stop Level - Entry in feet with 1 decimal.

e) Start lead well pump group when the level in the Ground Storage Tank is below the Start Level. Lead Group pumps will operate until the Stop Level is reach. If a pump in the lead group is unavailable or failed then start the Lag Group.

6. Indicators and alarms:
   a. As shown on the drawings.

B. Loop 40 - Ground Storage:

1. References:
   a. 40N01.
2. Abstract:
   a. The ground storage tank receives water from the wells and sodium hypochlorite. The tank has two pressure transmitters. The discharge of the tank has a chlorine residual analyzer and pH analyzer. A pressure control valve with its own vendor supplied controller is used to control the flow rate for the tank recirculation system.
3. Hardwired control:
   1) Not applicable.
4. Hardwired interlocks/overload programmed interlocks:
   a. Not applicable.
5. PLC control:
   a. Storage tanks:
      1) As indicated on drawings and in Section 17100 - Control Strategies.
      2) Utilize Owner's existing PLC Logix and HMI widgets for analog devices.

6. Indicators and alarms:
    a. As shown on the drawings.

C. Loop 50 - Distribution Pumping:
    1. References:
        a. 50N01.
        b. 50N02.
        c. 50N03.
        d. 70N01.
    2. Abstract:
        a. 2 jockey pumps and 3 high service pumps are used to maintain pressure in the potable water distribution system. Jockey and high service pumps operate in a lead/lag scenario. Make provisions for an additional future high service pump.
    3. Hardwired control:
        a. Manual control at the pump:
            1) When Enable/Disable handswitch (HSL-52-1,2; HSL-54-1,2,3,4) is in the Disable position then the associated pump cannot be operated and will be Off.
            2) When the Enable/Disable handswitch is in the Enable position then the associated pump will be controlled by the handswitches at the VFD.
        b. Manual control at the VFD:
            1) Manual control at the MCC is available when the local Enable/Disable handswitch is in the Enable position.
            2) When the Hand/Off/Auto (HOA) handswitch at the VFD is in the Hand position then the associated pump can be started or stopped using the Start and Stop pushbuttons on the VFD and speed controlled by the potentiometer. Alternatively the VFD keypad can be used.
            3) When the HOA handswitch at the VFD is in the Off position then the associated pump is off and cannot be started by the PLC.
            4) When the HOA handswitch at the VFD is in the Auto position then the associated pump is controlled by the plant PLC.
    4. Hardwired interlocks/overload programmed interlocks:
        a. High pressure from the pressure switch interlocked through the PLC soft logic to stop pump in PLC control mode only.
        b. Low pressure from the pressure switch interlocked through the PLC soft logic to stop pump in PLC control mode only.
    5. PLC control:
        a. In PCS AUTO:
            1) When the pump is called to run by the operator, the PLC shall increase the speed to a preset initial speed and then increase the speed to the operator-set running speed, as follows:
                a) The PLC shall speed the pump up to a preset initial operating speed of (determined during startup based on minimum allowed pump flow).

            - b) The PLC shall increase the speed of the pump from the initial start speed to the operator-set running speed in intervals of a user defined period of time (normally set at 5 minutes) at a rate of an operator defined percentage of the set running speed (normally set at 10 percent).
            - c) The pump shall remain at the operator set running speed until the pump is called to stop by the operator.
        - 2) When the pump is called to stop, the PLC shall decrease the speed of the pump from the operator set running speed to the initial start speed in intervals of a user defined period of time (normally set at 5 minutes) at a rate of an operator defined percentage of the set running speed (normally set at 10 percent). The pump shall stop once it reaches the initial speed set during startup.
        - 3) When the HOA switch is in AUTO and the control strategy is in Auto mode, the Operators can monitor the pumps, and send Start/Stop commands to the pumps. When the Operator initiates a start, the selected lead pump will be requested to start and the speed of the pump will vary to maintain the Operator flow set point.
            - a) If the flow set point is higher than the lead pump at 98 percent speed, the lag pump shall be requested to start.
            - b) The lag pump will not be allowed to start when the lead pump is operating at speeds less than 98 percent.
        - 4) When the Operator has selected to stop the pumps, the control strategy will ramp the speed to minimum and stop the pumps, beginning with the lag pump and then the lead pump.
        - 5) Lead and lag pump designation shall alternate based on an operator adjustable timer (initially set at 24 hours).
            - a) Alternate Group 1:
                - (1) Jockey Pumps shall alternate on its own schedule.
            - b) Alternate Group 2:
                - (1) High Service Pumps shall alternate on its own schedule.
        - 6) Lag Pump Contactor shall be ON/READY for an operator adjustable time (set at 1 hour)
        - 7) Min speed is field determined. Lead pump contactor is always in ON/READY mode.
- 6. Indicators and alarms:
    - a. As indicated on the drawings.

D. Loop 80 - Sodium Hypochlorite:

- 1. References:
    - a. 80N01.
    - b. 80N02.
    - c. 80N03.
    - d. 81N01
    - e. 81N02
    - f. 82N01.
    - g. 82N02.

2. Abstract:
    a. The Sodium Hypochlorite system consists of 2 chemical tanks with a common tank fill alarm panel. Each storage tank has a radar level transmitter. There are 2 Sodium Hypochlorite pumping skids that each include a vendor control panel. Each pumping skid has two pumps. Lake Gibson and Sherwood Lakes each have existing Sodium Hypochlorite skids.
3. Hardwired control:
    a. The sodium hypochlorite pumps include local control provided by the vendor.
4. Hardwired interlocks/overload programmed interlocks:
    a. Not applicable.
5. PLC control:
    a. Direct Feed Control:
        1) Pump control and speed is set by the operator.
    b. Flow Paced Control:
        1) Section 17100 - Control Strategies describes the algorithms used for chemical flow pacing.
6. Indicators and alarms:
    a. As shown on the drawings.

E. Loop 90 - Generators:
    1. References:
        a. 90N01.
        b. 91N01
        c. 92N01.
    2. Abstract:
        a. The generator shall automatically start up upon power failure.
    3. Hardwired control:
            1) Refer to the generator specification 16232 - Single Diesel Fueled Engine Generator Above 200 KW.
    4. Hardwired interlocks/overload programmed Interlocks:
    5. PLC control:
        a. In auto, the Automatic transfer switch shall be called to start the generator upon power failure.
        b. Generator exercising and testing:
            1) The PLC shall control scheduled generator exercising and testing.
            2) Provide a weekly generator exercising scheduler for the operator.
            3) Operator selects day of week to perform generator exercising.
            4) Operator selects time of day to perform generator exercising.
            5) Operator selects duration that the generator runs.
            6) When generator exercising schedule is initiated perform the following steps:
                a) Stop all running equipment and open contactors for all VFDs.
                b) Start generator
                c) When generator power is available, sequentially restart equipment under generator power starting with high service pumping.
                d) When generator exercising is completed first stop all running equipment and re-transfer power to utility.
                e) When utility power is available, sequentially restart equipment under generator power starting with high service pumping.

6. Indicators and alarms:
    a. As shown on the drawings.

3.05 REPAIR/RESTORATION (NOT USED)

3.06 RE-INSTALLATION (NOT USED)

3.07 FIELD QUALITY CONTROL (NOT USED)

3.08 ADJUSTING (NOT USED)

3.09 CLEANING (NOT USED)

3.10 DEMONSTRATION AND TRAINING

A. As specified in Section 17050 - Common Work Results for Process Control and Instrumentation Systems.

3.11 PROTECTION (NOT USED)

3.12 SCHEDULES (NOT USED)

END OF SECTION

THIS PAGE INTENTIONALLY LEFT BLANK

SECTION 17201

LEVEL MEASUREMENT: SWITCHES

PART 1 GENERAL

1.01 SUMMARY

A. Section includes:
   1. Displacement float level switch.

B. Provide all instruments identified in the Contract Documents.

1.02 REFERENCES

A. As specified in Section 17050 - Common Work Results for Process Control and Instrumentation Systems.

1.03 DEFINITIONS

A. As specified in Section 17050 - Common Work Results for Process Control and Instrumentation Systems.

1.04 SUBMITTALS

A. Furnish submittals as specified in Sections 01330 - Submittal Procedures and 17050 - Common Work Results for Process Control and Instrumentation Systems.

B. Provide complete documentation covering the traceability of all calibration instruments.

1.05 QUALITY ASSURANCE

A. As specified in Section 17050 - Common Work Results for Process Control and Instrumentation Systems.

B. Examine the complete set of Contract Documents and verify that the instruments are compatible with the installed conditions including:
   1. Process conditions: Fluids, pressures, temperatures, flows, materials etc.
   2. Physical conditions:
      a. Installation and mounting requirements.
      b. Location within the process.
      c. Accessories: Verify that all required accessories are provided and are compatible with the process conditions and physical installation.

C. Notify the Engineer if any installation condition does not meet the instrument manufacturer's recommendations or specifications.

1.06 DELIVERY, STORAGE, AND HANDLING

A. As specified in Section 17050 - Common Work Results for Process Control and Instrumentation Systems.

1.07 PROJECT OR SITE CONDITIONS

A. Project environmental conditions as specified in Section 17050 - Common Work Results for Process Control and Instrumentation Systems.
   1. Provide instruments suitable for the installed site conditions including, but not limited to, material compatibility, site altitude, site seismic conditions, humidity, and process and ambient temperatures.

1.08 WARRANTY

A. As specified in Section 17050 - Common Work Results for Process Control and Instrumentation Systems.

1.09 MAINTENANCE

A. Furnish all parts, materials, fluids, etc. necessary for operation, maintenance, and calibration purposes throughout the warranty period. Deliver all of these supplies before project substantial completion.

PART 2 PRODUCTS

2.01 MANUFACTURERS

A. One of the following or equal:
   1. Displacement float level switch:
      a. Gems Sensors and Controls, Series LS-3.
      b. B/W, Unifloat.

2.02 MANUFACTURED UNITS

A. Displacement float level switch:
   1. General: Float with a permanent magnet encircles a stationary stem. A hermetically sealed magnetically operated latching reed switch(es) mounted in the stem:
      a. Mercury switches are not acceptable.
   2. Lead wires: Mounted in flexible waterproof PVC cable from switch to junction box terminals without splices.
   3. Switch:
      a. Single pole single throw (SPST).
   4. The number of floats per level system shall be as indicated on the Drawings.

2.03 ACCESSORIES (NOT USED)

2.04 SOURCE QUALITY CONTROL

A. As specified in Section 17050 - Common Work Results for Process Control and Instrumentation Systems.

PART 3 EXECUTION

3.01 EXAMINATION

A. Examine the installation location for the instrument and verify that the instrument will work properly when installed.
   1. Notify the Engineer promptly if any installation condition does not meet the instrument manufacturer’s recommendations or specifications.

3.02 PREPARATION (NOT USED)

3.03 INSTALLATION

A. As specified in Section 17050 - Common Work Results for Process Control and Instrumentation Systems.

3.04 FIELD QUALITY CONTROL

A. As specified in Section 17050 - Common Work Results for Process Control and Instrumentation Systems.

3.05 ADJUSTING

A. As specified in Section 17950 - Testing, Calibration, and Commissioning.

3.06 CLEANING

A. As specified in Section 17050 - Common Work Results for Process Control and Instrumentation Systems.

3.07 DEMONSTRATION AND TRAINING

A. As specified in Section 17050 - Common Work Results for Process Control and Instrumentation Systems.

3.08 PROTECTION

A. As specified in Section 17050 - Common Work Results for Process Control and Instrumentation Systems.

3.09 SCHEDULES

A. The provided information does not necessarily include all required instruments. Provide all instruments identified in the Contract Documents:
   1. Instruments may be as indicated on the Drawings, as specified in the Specifications or both.

END OF SECTION

THIS PAGE INTENTIONALLY LEFT BLANK

Engineers...Working Wonders With Water™

Level Switch

SPECIFICATION: 17201

PROJECT INFORMATION

PLANT
PROJECT 9621C10

CUSTOMER POLK COUNTY UTILITIES
LOCATION

ELEMENT/SWITCH

GENERAL NOTE: FIELDS SHOWN WITH THE [*] SYMBOL ARE NOT SHOWN ON THE DATASHEET BUT MAY BE REQUIRED BY THE CONTRACT DOCUMENTS. THE CONTRACTOR SHALL SUBMIT COMPLETE ISA DATASHEETS FOR EACH INSTRUMENT PER ALL SPECIFIED REQUIREMENTS.

Tag:	P&ID
LSH-80-1 LE1-80-1	80N001

SERVICE: CHEMICAL CONTAINMENT LEVEL HIGH

FLUID: SODIUM HYPOCHLORIT
MEASURING PRINCIPLE: DISPLACEMENT FLOAT
SET POINT: 6" AFF
MOUNTING: INTEGRAL
TYPICAL DETAILS: [*]
SURGE PROTECTION: NO

HAZARDOUS APP: N/A
ELEM. ENC. CLASS: NEMA 4X
ELEM. MATERIAL: MFR. STD.
SWITCH ENCL. CLASS: NEMA 4X
ENCL. MATERIAL: MFR. STD.

POWER: [*]
POWER LOCATION: LOOP
OUTPUT: RELAY
RELAY FORM: SPDT
PLC: PLC-1-1

THIS PAGE INTENTIONALLY LEFT BLANK

SECTION 17208

LEVEL MEASUREMENT: RADAR PULSE TIME OF FLIGHT (PTOF)

PART 1 GENERAL

1.01 SUMMARY

A. Section includes:
   1. Non-contact radar (PTOF) level instruments.

B. Provide all instruments identified in the Contract Documents.

1.02 REFERENCES

A. As specified in Section 17050 - Common Work Results for Process Control and Instrumentation Systems.

1.03 DEFINITIONS

A. As specified in Section 17050 - Common Work Results for Process Control and Instrumentation Systems.

B. Specific definitions:
   1. PTOF: Pulse Time of Flight.

1.04 SUBMITTALS

A. Furnish submittals as specified in Sections 01330 - Submittal Procedures and 17050 - Common Work Results for Process Control and Instrumentation Systems.

B. QUALITY ASSURANCE

C. As specified in Section 17050 - Common Work Results for Process Control and Instrumentation Systems.

D. Examine the complete set of Contract Documents and verify that the instruments are compatible with the installed conditions including:
   1. Process conditions: Fluids, pressures, temperatures, flows, materials, etc.
   2. Physical conditions:
      a. Installation and mounting requirements.
      b. Location within the process.
      c. Accessories: Verify that all required accessories are provided and are compatible with the process conditions and physical installation.

E. Notify the Engineer if any installation condition does not meet the instrument manufacturer’s recommendations or specifications.

1.05 DELIVERY, STORAGE, AND HANDLING

A. As specified in Section 17050 - Common Work Results for Process Control and Instrumentation Systems.

1.06 PROJECT OR SITE CONDITIONS

A. As specified in Section 17050 - Common Work Results for Process Control and Instrumentation Systems.

1.07 WARRANTY

A. As specified in Section 17050 - Common Work Results for Process Control and Instrumentation Systems.

1.08 MAINTENANCE

A. As specified in Section 17050 - Common Work Results for Process Control and Instrumentation Systems.

PART 2 PRODUCTS

2.01 MANUFACTURERS

A. One of the following or equal:
   1. Ohmart Vega, VegaPuls.
   2. Siemens/Milltronics, LR250.
   3. Endress+Hauser, Micropilot M.

2.02 MANUFACTURED UNITS

A. Pulse Time of Flight:
   1. General:
      a. Instrument emits radar pulses via a transmitter, with a frequency range of 6.3 GHz to 26 GHz.
      b. The pulses reflect from the surface being measured and are received back at the instrument via a sensor.
      c. The instrument measures the pulse travel time between the transmitter, surface, and receiver to calculate the level.
      d. Safety:
         1) Shall not generate frequency waves with power levels hazardous to humans.
   2. Performance requirements:
      a. Accuracy: Level:
         1) 0.25-inch.
   3. Element:
      a. Level element must conform to the process material compatibility as indicated on the Instrument Data Sheets or the Instrument Index.

b. Connections:
    1) Process: The antenna design shall be suitable for mounting in a nozzle as indicated on the Instrument Data Sheets or the Instrument Index.
    2) The design shall be such that product condensation on the antenna shall not affect the performance of the gauge. It shall be possible to choose between either parabolic-, cone-, rod-shaped antennas.

4. Transmitter:
    a. Microprocessor-based signal converter/transmitter.
    b. Power supply:
        1) 24 VDC - 2-wire loop powered.
        2) Power consumption: 15 VA maximum.
    c. Outputs:
        1) Isolated 4-20 mA DC with HART communication protocol.
    d. Backlit digital display for level or volume.
    e. Self-diagnostics and automatic data checking.
    f. Signal integrity:
        1) Immune to radio frequency and electromagnetic interference with field strength of 15 volts/meter or less over a frequency range of 50 Hz to 460 MHz.
        2) Able to ignore momentary level spikes or momentary loss of echo and indicate loss of echo condition on indicating transmitter unit.
    g. Protected terminals and fuses in a separate compartment, which isolates field connection from electronics.
        1) Indication: Local - 5-digit display.
    h. Enclosure rating: NEMA Type 4X.
    i. Electrical connection: 1/2-inch male NPT.

2.03 ACCESSORIES

A. Software: Provide Windows based PC software for configuration and echo mapping.

B. Provide sun shield for outdoor installations.

2.04 SOURCE QUALITY CONTROL

A. As specified in Section 17050 - Common Work Results for Process Control and Instrumentation Systems.

B. Factory calibrate each level transmitter at a facility that is traceable to NIST.

C. Provide complete documentation covering the traceability of all calibration instruments.

PART 3 EXECUTION

3.01 EXAMINATION (NOT USED)

3.02 PREPARATION (NOT USED)

3.03 INSTALLATION

A. As specified in Section 17050 - Common Work Results for Process Control and Instrumentation Systems.

B. Coordinate the installation with all trades to ensure that the mechanical system has all necessary appurtenances including weld-o-lets, valves, etc. for proper installation of instruments.

3.04 FIELD QUALITY CONTROL

A. As specified in Section 17050 - Common Work Results for Process Control and Instrumentation Systems.

3.05 ADJUSTING

A. Verify factory calibration of all instruments in accordance with the manufacturer’s instructions:
   1. Return factory calibrated devices to the factory if they do not meet the field verification requirements for calibration.

3.06 CLEANING

A. As specified in Section 17050 - Common Work Results for Process Control and Instrumentation Systems.

3.07 DEMONSTRATION AND TRAINING

A. As specified in Section 17050 - Common Work Results for Process Control and Instrumentation Systems.

B. Demonstrate performance of all instruments to the Engineer before commissioning.

3.08 PROTECTION

A. As specified in Section 17050 - Common Work Results for Process Control and Instrumentation Systems.

3.09 SCHEDULES

A. The provided information does not necessarily include all required instruments. Provide all instruments identified in the Contract Documents:
   1. Instruments may be indicated on the Drawings, specified in the Specifications or both.

END OF SECTION

Level Transmitter

PROJECT INFORMATION

PLANT GIBSON OAKS WPF
CUSTOMER POLK COUNTY UTILITIES
PROJECT 9621C10
LOCATION POLK COUNTY, FL

GENERAL NOTE: FIELDS SHOWN WITH THE [*] SYMBOL ARE NOT SHOWN ON THE DATASHEET BUT MAY BE REQUIRED BY THE CONTRACT DOCUMENTS. THE CONTRACTOR SHALL SUBMIT COMPLETE ISA DATASHEETS FOR EACH INSTRUMENT PER ALL SPECIFIED REQUIREMENTS.

GENERAL

SPECIFICATION NUMBER 17208
DRAWING NUMBER 80N001
SERVICE CHEMICAL TANK NO. 1 LEVEL TRANS
MEASURING PRINCIPLE RADAR PTOF
PLC [NOT FOUND ON P&ID]
TYPICAL DETAILS [*]

CONNECTION

PROCESS CONNECTION FLANGE MOUNT

FLUID

LEVEL RANGE 0-12 FT
TEMPERATURE N/A

ELEMENT

ELEMENT TAG NO. LE-80-1
ELEMENT HAZ. MATERIALS N/A
SUBMERGENCE DETECTION NO
HEATED ELEMENT NO
ENCLOSURE CLASS NEMA 4X
ELEMENT MATERIAL MFR. STD.
TEMPERATURE COMP. NO

TRANSMITTER

TRANSMITTER TAG NO. LIT-80-1
MOUNTING INTEGRAL
POWER LOOP
AMBIENT TEMPERATURE [*]
SURGE PROTECTION YES
HAZARDOUS APPROVALS N/A
ENCLOSURE CLASS NEMA 4X
OUTPUT 4-20 MA
MEASUREMENT APPL LEVEL

NOTES

[*]

Level Transmitter

PROJECT INFORMATION

PLANT	GIBSON OAKS WPF	**CUSTOMER**	POLK COUNTY UTILITIES
PROJECT	9621C10	**LOCATION**	POLK COUNTY, FL

GENERAL NOTE: FIELDS SHOWN WITH THE [*] SYMBOL ARE NOT SHOWN ON THE DATASHEET BUT MAY BE REQUIRED BY THE CONTRACT DOCUMENTS. THE CONTRACTOR SHALL SUBMIT COMPLETE ISA DATASHEETS FOR EACH INSTRUMENT PER ALL SPECIFIED REQUIREMENTS.

GENERAL

SPECIFICATION NUMBER	17208	**MEASURING PRINCIPLE**	RADAR PTOF
DRAWING NUMBER	80N001	**PLC**	PLC-1-2
SERVICE	CHEMICAL TANK NO. 2 LEVEL TRANS	**TYPICAL DETAILS**	[*]

CONNECTION

PROCESS CONNECTION	FLANGE MOUNT

FLUID

LEVEL RANGE	0-12 FT	**TEMPERATURE**	N/A

ELEMENT

ELEMENT TAG NO.	LE-80-2	**ENCLOSURE CLASS**	NEMA 4X
ELEMENT HAZ. MATERIALS	N/A	**ELEMENT MATERIAL**	MFR. STD.
SUBMERGENCE DETECTION	NO	**TEMPERATURE COMP.**	NO
HEATED ELEMENT	NO		

TRANSMITTER

TRANSMITTER TAG NO.	LIT-80-2	**HAZARDOUS APPROVALS**	N/A
MOUNTING	INTEGRAL	**ENCLOSURE CLASS**	NEMA 4X
POWER	[*]	**OUTPUT**	4-20 MA
AMBIENT TEMPERATURE	[*]	**MEASUREMENT APPL**	LEVEL
SURGE PROTECTION	YES		

NOTES

[*]

SECTION 17301

FLOW MEASUREMENT: SWITCHES

PART 1 GENERAL

1.01 SUMMARY

A. Section includes:
   1. Thermal dispersion flow switches.

B. Provide all instruments identified in the Contract Drawings.

1.02 REFERENCES

A. As specified in Section 17050 - Common Work Results for Process Control and Instrumentation Systems.

1.03 DEFINITIONS

A. As specified in Section 17050 - Common Work Results for Process Control and Instrumentation Systems.

1.04 SUBMITTALS

A. Furnish submittals as specified in Sections 01330 - Submittal Procedures and 17050 - Common Work Results for Process Control and Instrumentation Systems.

B. Provide complete documentation covering the traceability of all calibration instruments.

1.05 QUALITY ASSURANCE

A. As specified in Section 17050 - Common Work Results for Process Control and Instrumentation Systems.

B. Examine the complete set of Contract Documents and verify that the instruments are compatible with the installed conditions including:
   1. Process conditions: Fluids, pressures, temperatures, flows, materials, etc.
   2. Physical conditions:
      a. Installation and mounting requirements.
      b. Location within the process.
      c. Accessories: Verify that all required accessories are provided and are compatible with the process conditions and physical installation.

C. Notify the Engineer if any installation condition does not meet the instrument manufacturer’s recommendations or specifications.

1.06 DELIVERY, STORAGE, AND HANDLING

- A. As specified in Section 17050 - Common Work Results for Process Control and Instrumentation Systems.

1.07 PROJECT OR SITE CONDITIONS

- A. As specified in Section 17050 - Common Work Results for Process Control and Instrumentation Systems.
  - 1. Provide instruments suitable for the installed site conditions including, but not limited to, material compatibility, site altitude, site seismic conditions, humidity, and process and ambient temperatures.

1.08 WARRANTY

- A. As specified in Section 17050 - Common Work Results for Process Control and Instrumentation Systems.

1.09 MAINTENANCE

- A. Furnish all parts, materials, fluids, etc. necessary for operation, maintenance, and calibration purposes throughout the warranty period. Deliver all of these supplies before project substantial completion.

PART 2 PRODUCTS

2.01 MANUFACTURERS

- A. One of the following or equal:
  - 1. Thermal dispersion type:
    - a. Fluid Components International LLC, FLT93.
    - b. Kayden.

2.02 MANUFACTURED UNITS

- A. Thermal dispersion type:
  - 1. General:
    - a. Instrument uses a heated probe and a reference probe.
      - 1) Deviation in the amount of heat measured by the reference probe deviates beyond the setpoint an adjustable relay closes.
      - 2) Switch:
        - a) Micro-processor based with continuous self-diagnostics, “Smart Heater” to prevent sensor failure, no mechanical jumpers or trim pots, and a 3-year warranty.
      - 3) Seal water applications:
        - a) For clean water flow applications in line sizes 1-inch or smaller, provide in-line pre-assembled flow switch assembly with NPT process connections.
  - 2. Performance requirements:
    - a. Accuracy: Within 2 degrees Fahrenheit.
    - b. Repeatability: Within 1 percent of setpoint range.
    - c. Response time: 0.5 to 2.5 seconds.

        d. Adjustable bypass delay timer.
        e. Adjustable range.
    3. Switch characteristics:
        a. Exposed parts: Powder coated aluminum housing.
        b. Wetted parts:
            1) Materials as recommended by the manufacturer and approved by the Engineer.
        c. Power supply:
            1) 115 VAC.
            2) Power consumption: 13 VA maximum.
        d. Operating temperature range: -40 degrees Fahrenheit to 140 degrees Fahrenheit.
        e. Enclosure:
            1) NEMA Type 4X.

2.03 ACCESSORIES

A. Provide sunshades for outdoor installations.

2.04 SOURCE QUALITY CONTROL

A. As specified in Section 17050 - Common Work Results for Process Control and Instrumentation Systems.

B. Factory calibrate each instrument with a minimum 3-point calibration or according to Manufacturer’s standard at a facility that is traceable to the NIST.
    1. Submit calibration data sheets to the Engineer at least 30 days before shipment of the instruments to the project site.

PART 3 EXECUTION

3.01 EXAMINATION

A. Examine the installation location for the instrument and verify that the instrument will work properly when installed.
    1. Notify the Engineer promptly if any installation condition does not meet the instrument manufacturer’s recommendations or specifications.

3.02 PREPARATION (NOT USED)

3.03 INSTALLATION

A. As specified in Section 17050 - Common Work Results for Process Control and Instrumentation Systems

3.04 FIELD QUALITY CONTROL

A. As specified in Section 17050 - Common Work Results for Process Control and Instrumentation Systems.

3.05 ADJUSTING

A. As specified in Section 17950 - Commissioning for Instrumentation and Controls.

3.06 CLEANING

A. As specified in Section 17050 - Common Work Results for Process Control and Instrumentation Systems.

3.07 DEMONSTRATION AND TRAINING

A. As specified in Section 17050 - Common Work Results for Process Control and Instrumentation Systems.

3.08 PROTECTION

A. As specified in Section 17050 - Common Work Results for Process Control and Instrumentation Systems.

3.09 SCHEDULES

A. The provided information does not necessarily include all required instruments. Provide all instruments identified in the Contract Documents:
   1. Instruments may be indicated on the Drawings, specified in the Specifications or both.

END OF SECTION

Engineers...Working Wonders With Water™

Flow Switch

SPECIFICATION: 17301

PROJECT INFORMATION

PLANT GIBSON OAKS WPF

PROJECT 9621C10

CUSTOMER POLK COUNTY UTILITIES

LOCATION POLK COUNTY, FL

ELEMENT/SWITCH

GENERAL NOTE: FIELDS SHOWN WITH THE [*] SYMBOL ARE NOT SHOWN ON THE DATASHEET BUT MAY BE REQUIRED BY THE CONTRACT DOCUMENTS. THE CONTRACTOR SHALL SUBMIT COMPLETE ISA DATASHEETS FOR EACH INSTRUMENT PER ALL SPECIFIED REQUIREMENTS.

Tag:	P&ID
FSL-40-2	40N001
FE-40-2	

SERVICE: THERMAL LOW FLOW SWITCH

FLUID: UTILITY WATER

MEASURING PRINCIPLE: THERMAL SW

SET POINT: 10 GPM

PROCESS CONNECTION: M-NPT

CONNECTION MATERIAL: 316L STAINLESS STEEL

TYPICAL DETAILS: [*]

HAZARDOUS APP: N/A

ELEM. ENC. CLASS: NEMA 4X

SWITCH ENCL. CLASS: NEMA 4X

PRESSURE: N/A

TEMPERATURE: N/A

VISCOSITY: N/A

POWER: 120VAC-1P

POWER LOCATION: PCM-1-1

OUTPUT: RELAY

RELAY FORM: SPDT

PLC: PLC-1-1

SURGE PROTECTION: YES

Notes: PROVIDE SURGE PROTECTION ON DEVICE POWER.

SECTION 17302

FLOW MEASUREMENT: MAGNETIC FLOWMETERS

PART 1 GENERAL

1.01 SUMMARY

A. Section includes:
   1. Full-body magnetic flowmeters.

B. Provide all instruments identified in the Contract Drawings.

1.02 REFERENCES

A. As specified in Section 17050 - Common Work Results for Process Control and Instrumentation Systems.

B. International Organization for Standardization (ISO):
   1. 9000 - Quality management systems -- Fundamentals and vocabulary.
   2. 17025 - General requirements for the competence of testing and calibration laboratories.

C. National Institute of Standards and Technology (NIST).

D. NSF International (NSF).

1.03 DEFINITIONS

A. As specified in Section 17050 - Common Work Results for Process Control and Instrumentation Systems.

1.04 SUBMITTALS

A. Furnish submittals as specified in Sections 01330 - Submittal Procedures and 17050 - Common Work Results for Process Control and Instrumentation Systems.

1.05 QUALITY ASSURANCE

A. As specified in Section 17050 - Common Work Results for Process Control and Instrumentation Systems.

B. Examine the complete set of Contract Documents and verify that the instruments are compatible with the installed conditions including:
   1. Process conditions: Fluids, pressures, temperatures, flows, materials, etc.

2. Physical conditions:
   a. Installation and mounting requirements.
   b. Location within the process.
   c. Accessories: Verify that all required accessories are provided and are compatible with the process conditions and physical installation.

C. Notify the Engineer if any installation condition does not meet the instrument manufacturer’s recommendations or specifications.

1.06 DELIVERY, STORAGE, AND HANDLING

A. As specified in Section 17050 - Common Work Results for Process Control and Instrumentation Systems

1.07 PROJECT OR SITE CONDITIONS

A. As specified in Section 17050 - Common Work Results for Process Control and Instrumentation Systems.

1.08 WARRANTY

A. As specified in Section 17050 - Common Work Results for Process Control and Instrumentation Systems.

1.09 MAINTENANCE

A. As specified in Section 17050 - Common Work Results for Process Control and Instrumentation Systems.

PART 2 PRODUCTS

2.01 MANUFACTURERS

A. One of the following or equal:
   1. McCrometer Ultra Mag
   2. Siemens Sitrans F M.
   3. Endress+Hauser Promag 53.

2.02 MANUFACTURED UNITS

A. Magnetic flowmeter:
   1. General:
      a. Magnetic flowmeters obtain the flow velocity by measuring the changes of induced voltage of the conductive fluid passing across a controlled magnetic field.
      b. Complete zero stability shall be an inherent characteristic of the flowmeter system.
      c. Include for each magnetic flow metering system:
         1) A metering tube with electrodes (sensor).
         2) Signal cable.
         3) Transmitter integral or remote as indicated on the Drawings.
         4) Flowmeter grounding rings.

2. Performance requirements:
    a. Accuracy:
        1) 0.25 percent of flow rate from 10 to 100 percent of full-scale for velocities ranging between 1.9 to 10 feet per second.
    b. Repeatability:
        1) 0.25 percent of rate.
3. Element:
    a. Metering tube:
        1) Constructed of carbon steel or Type 304 stainless steel (unless specifically noted otherwise in the instrument data sheets) with wafer connections compatible with piping material.
        2) Liner material in conformance with:
            a) Manufacturer's recommendations for the intended service.
            b) NSF certified for all drinking water applications.
        3) Electrodes type and material in conformance with:
            a) Manufacturer's recommendations for the intended service.
            b) Utilize a minimum of 2, self-cleaning electrodes.
        4) Meter terminal housing NEMA Type 4X unless specifically noted otherwise in the instrument data sheets.
        5) Meter coating consisting of epoxy painted finish.
4. Transmitter:
    a. Power supply:
        1) 120 Vac.
        2) Power consumption: 60 VA maximum.
    b. Outputs:
        1) 4-20mA output proportional to flow.
        2) Pulse output proportional to totalized flow.
        3) As noted in the instrument data sheets.
    c. Microprocessor-based signal converter/transmitter.
    d. Utilize DC pulse technique to drive flux-producing coils.
    e. Contain a 6-digit display for flow rate, percent of span, and totalizer.
    f. Operator keypad interface.
    g. Integral zero return to provide consistent zero output signals in response to an external dry contact closure.
    h. Integral low flow cut-off zero return.
    i. Programmable parameters including:
        1) Meter size.
        2) Full-scale flow rate.
        3) Magnetic field frequency.
        4) Time constant.
    j. Data retention for a minimum of 5 years without auxiliary main or battery power.
    k. Self-diagnostics and automatic data checking.
    l. Protected terminals and fuses in a separate compartment which isolates field connection from electronics.
    m. Ambient operating temperature limits of -5 to 140 degrees Fahrenheit (-20 to 60 degrees Celsius).
    n. The transmitter should retain all setup parameters and accumulated measurements internally in non-volatile memory in the event of power failure.

2.03 ACCESSORIES

A. Stainless steel tag labeled as specified in the Contract Documents.

B. Provide sunshades for all transmitters located outdoors in direct sunlight.

2.04 SOURCE QUALITY CONTROL

A. As specified in Section 17050 - Common Work Results for Process Control and Instrumentation Systems.

B. Factory calibrate each flow metering system at a facility that is traceable to the NIST. ISO-17025 accredited test facility with certified accuracy traceable to NIST.

C. Evidence of accreditation shall originate from a national verification agency such as A2LA.

D. A real-time computer-generated printout of the actual calibration date indication actual velocities and as read values of the flow tube.
   1. Flow calibration report of the manufacturers flow lab calibration procedure shall be shipped with the meter system.
   2. Minimum calibration shall be a 3-point calibration including 1, 3, and 10 feet per second velocities for every meter and transmitter system.
   3. Manufacturer shall archive all calibration reports for future reference.

PART 3 EXECUTION

3.01 EXAMINATION (NOT USED)

3.02 PREPARATION (NOT USED)

3.03 INSTALLATION

A. As specified in Section 17050 - Common Work Results for Process Control and Instrumentation Systems.

B. For instruments located outdoors or where instrument elements and transmitters are separated by conduit located outside the building envelope, provide surge protection devices at the transmitters.

3.04 FIELD QUALITY CONTROL

A. As specified in Section 17050 - Common Work Results for Process Control and Instrumentation Systems.

B. Provide manufacturer’s services to perform installation inspection.

3.05 ADJUSTING

A. Field Verification:
   1. Verify factory calibration of all instruments in accordance with the manufacturer’s instructions.

2. The transmitter and sensor to include a method to verify flow meter performance to the original manufacturer specifications.
3. Verification should be traceable to factory calibration using a third party, attested onboard system pursuant to ISO standards.
4. The verification report should be compliant to common quality systems such as ISO 9000 to prove reliability of the meter specified accuracy.
5. Return factory calibrated devices to the factory if they do not meet the field verification requirements for calibration.

3.06 CLEANING

A. As specified in Section 17050 - Common Work Results for Process Control and Instrumentation Systems.

3.07 DEMONSTRATION AND TRAINING

A. As specified in Section 17050 - Common Work Results for Process Control and Instrumentation Systems.

B. Demonstrate performance of all instruments to the Engineer before commissioning.

3.08 PROTECTION

A. As specified in Section 17050 - Common Work Results for Process Control and Instrumentation Systems.

3.09 SCHEDULES

A. Instrument Data Sheets included in this Section.

B. The provided information does not necessarily include all required instruments.

C. Provide all instruments identified in the Contract Documents:
   1. Instruments may be indicated on the Drawings, specified in the Specifications, or both.

END OF SECTION

Magnetic Flow Transmitter

PROJECT INFORMATION

PLANT	GIBSON OAKS WPF	**CUSTOMER**	POLK COUNTY UTILITIES
PROJECT	9621C10	**LOCATION**	POLK COUNTY, FL

GENERAL NOTE: FIELDS SHOWN WITH THE [*] SYMBOL ARE NOT SHOWN ON THE DATASHEET BUT MAY BE REQUIRED BY THE CONTRACT DOCUMENTS. THE CONTRACTOR SHALL SUBMIT COMPLETE ISA DATASHEETS FOR EACH INSTRUMENT PER ALL SPECIFIED REQUIREMENTS.

GENERAL

SPECIFICATION NUMBER	17302	**MEASURING PRINCIPLE**	MAGNETIC
DRAWING NUMBER	10N001	**PLC**	PLC-1-1
SERVICE	FLOW METER	**POWER LOCATION**	PCM-1-1
		TYPICAL DETAIL(S)	[*]

CONNECTION

LINE SIZE	8"	**PROCESS CONNECTION**	ANSI 150
LINE MATERIAL	[*]	**PROCESS CONN. MATERIAL**	STEEL

FLUID

FLUID	RAW WATER	**PRESSURE**	125 PSI
NOMINAL FLOW	350 GPM	**TEMPERATURE**	N/A
FLOW RANGE	0-500 GPM	**VISCOSITY**	N/A
		CONDUCTIVITY	N/A

ELEMENT

ELEMENT TAG NO.	FE-10-1	**PROCESS CONNECTION**	ANSI 150
ENCLOSURE CLASS	NEMA 4X	**LINER MATERIAL**	HARD RUBBER
HAZARDOUS APPROVALS	N/A	**VACUUM POSSIBILITY**	NO
TUBE SIZE	12"	**ELECTRODE TYPE**	MFR. STD.
TUBE MATERIAL	MFR. STD.	**ELECTRODE MATERIAL**	316 SST

TRANSMITTER

TRANSMITTER TAG NO.	FIT-10-1	**HAZARDOUS APPROVALS**	N/A
MOUNTING	INTEGRAL	**EMPTY PIPE DETECTION**	YES
ENCLOSURE CLASS	NEMA 4X	**BI DIRECTIONAL FLOW**	NO
POWER	120VAC-1P	**PULSE OUTPUT**	NO
AMBIENT TEMPERATURE	[*]	**RELAY OPTIONS**	NO
OUTPUT	4-20 MA	**POTTED ELECTRONICS**	NO
SURGE PROTECTION	YES	**CATHODIC PROT. LINE**	NO

NOTES

ULTRAMAG FUSION BONDED EPOXY LINER IS ACCEPTABLE. PROVIDE WITH 316SST GROUNDING RINGS.

Magnetic Flow Transmitter

PROJECT INFORMATION

PLANT	GIBSON OAKS WPF	**CUSTOMER**	POLK COUNTY UTILITIES
PROJECT	9621C10	**LOCATION**	POLK COUNTY, FL

GENERAL NOTE: FIELDS SHOWN WITH THE [*] SYMBOL ARE NOT SHOWN ON THE DATASHEET BUT MAY BE REQUIRED BY THE CONTRACT DOCUMENTS. THE CONTRACTOR SHALL SUBMIT COMPLETE ISA DATASHEETS FOR EACH INSTRUMENT PER ALL SPECIFIED REQUIREMENTS.

GENERAL

SPECIFICATION NUMBER	17302	**MEASURING PRINCIPLE**	MAGNETIC
DRAWING NUMBER	10N002	**PLC**	PLC-3-1
SERVICE	FLOW METER	**POWER LOCATION**	PCM-3-1
		TYPICAL DETAIL(S)	[*]

CONNECTION

LINE SIZE	12"	**PROCESS CONNECTION**	ANSI 150
LINE MATERIAL	[*]	**PROCESS CONN. MATERIAL**	STEEL

FLUID

FLUID	RAW WATER	**PRESSURE**	125 PSI
NOMINAL FLOW	1500 GPM	**TEMPERATURE**	N/A
FLOW RANGE	0-2100 GPM	**VISCOSITY**	N/A
		CONDUCTIVITY	N/A

ELEMENT

ELEMENT TAG NO.	FE-10-3	**PROCESS CONNECTION**	ANSI 150
ENCLOSURE CLASS	NEMA 4X	**LINER MATERIAL**	HARD RUBBER
HAZARDOUS APPROVALS	N/A	**VACUUM POSSIBILITY**	NO
TUBE SIZE	12"	**ELECTRODE TYPE**	MFR. STD.
TUBE MATERIAL	MFR. STD.	**ELECTRODE MATERIAL**	316 SST

TRANSMITTER

TRANSMITTER TAG NO.	FIT-10-3	**HAZARDOUS APPROVALS**	N/A
MOUNTING	INTEGRAL	**EMPTY PIPE DETECTION**	YES
ENCLOSURE CLASS	NEMA 4X	**BI DIRECTIONAL FLOW**	NO
POWER	120VAC-1P	**PULSE OUTPUT**	NO
AMBIENT TEMPERATURE	[*]	**RELAY OPTIONS**	NO
OUTPUT	4-20 MA	**POTTED ELECTRONICS**	NO
SURGE PROTECTION	YES	**CATHODIC PROT. LINE**	NO

NOTES

ULTRAMAG FUSION BONDED EPOXY LINER IS ACCEPTABLE. PROVIDE WITH 316SST GROUNDING RINGS.

Magnetic Flow Transmitter

PROJECT INFORMATION

PLANT	GIBSON OAKS WPF	**CUSTOMER**	POLK COUNTY UTILITIES
PROJECT	9621C10	**LOCATION**	POLK COUNTY, FL

GENERAL NOTE: FIELDS SHOWN WITH THE [*] SYMBOL ARE NOT SHOWN ON THE DATASHEET BUT MAY BE REQUIRED BY THE CONTRACT DOCUMENTS. THE CONTRACTOR SHALL SUBMIT COMPLETE ISA DATASHEETS FOR EACH INSTRUMENT PER ALL SPECIFIED REQUIREMENTS.

GENERAL

SPECIFICATION NUMBER	17302	**MEASURING PRINCIPLE**	MAGNETIC
DRAWING NUMBER	10N002	**PLC**	PLC-3-1
SERVICE	FLOW METER	**POWER LOCATION**	PCM-3-1
		TYPICAL DETAIL(S)	[*]

CONNECTION

LINE SIZE	12"	**PROCESS CONNECTION**	ANSI 150
LINE MATERIAL	[*]	**PROCESS CONN. MATERIAL**	STEEL

FLUID

FLUID	RAW WATER	**PRESSURE**	125 PSI
NOMINAL FLOW	1500 GPM	**TEMPERATURE**	N/A
FLOW RANGE	0-2100 GPM	**VISCOSITY**	N/A
		CONDUCTIVITY	N/A

ELEMENT

ELEMENT TAG NO.	FE-10-4	**PROCESS CONNECTION**	ANSI 150
ENCLOSURE CLASS	NEMA 4X	**LINER MATERIAL**	HARD RUBBER
HAZARDOUS APPROVALS	N/A	**VACUUM POSSIBILITY**	NO
TUBE SIZE	12"	**ELECTRODE TYPE**	MFR. STD.
TUBE MATERIAL	MFR. STD.	**ELECTRODE MATERIAL**	316 SST

TRANSMITTER

TRANSMITTER TAG NO.	FIT-10-4	**HAZARDOUS APPROVALS**	N/A
MOUNTING	INTEGRAL	**EMPTY PIPE DETECTION**	YES
ENCLOSURE CLASS	NEMA 4X	**BI DIRECTIONAL FLOW**	NO
POWER	120VAC-1P	**PULSE OUTPUT**	NO
AMBIENT TEMPERATURE	[*]	**RELAY OPTIONS**	NO
OUTPUT	4-20 MA	**POTTED ELECTRONICS**	NO
SURGE PROTECTION	YES	**CATHODIC PROT. LINE**	NO

NOTES

ULTRAMAG FUSION BONDED EPOXY LINER IS ACCEPTABLE. PROVIDE WITH 316SST GROUNDING RINGS.

Magnetic Flow Transmitter

PROJECT INFORMATION

PLANT	GIBSON OAKS WPF	**CUSTOMER**	POLK COUNTY UTILITIES
PROJECT	9621C10	**LOCATION**	POLK COUNTY, FL

GENERAL NOTE: FIELDS SHOWN WITH THE [*] SYMBOL ARE NOT SHOWN ON THE DATASHEET BUT MAY BE REQUIRED BY THE CONTRACT DOCUMENTS. THE CONTRACTOR SHALL SUBMIT COMPLETE ISA DATASHEETS FOR EACH INSTRUMENT PER ALL SPECIFIED REQUIREMENTS.

GENERAL

SPECIFICATION NUMBER	17302	**MEASURING PRINCIPLE**	MAGNETIC
DRAWING NUMBER	40N001	**PLC**	PLC-1-1
SERVICE	FLOW METER	**POWER LOCATION**	LP-1
		TYPICAL DETAIL(S)	[*]

CONNECTION

LINE SIZE	12"	**PROCESS CONNECTION**	ANSI 150
LINE MATERIAL	[*]	**PROCESS CONN. MATERIAL**	STEEL

FLUID

FLUID	RAW WATER	**PRESSURE**	125 PSI
NOMINAL FLOW	3000 GPM	**TEMPERATURE**	N/A
FLOW RANGE	0-4000 GPM	**VISCOSITY**	N/A
		CONDUCTIVITY	N/A

ELEMENT

ELEMENT TAG NO.	FE-40-1	**PROCESS CONNECTION**	ANSI 150
ENCLOSURE CLASS	NEMA 4X	**LINER MATERIAL**	HARD RUBBER
HAZARDOUS APPROVALS	N/A	**VACUUM POSSIBILITY**	NO
TUBE SIZE	12"	**ELECTRODE TYPE**	MFR. STD.
TUBE MATERIAL	MFR. STD.	**ELECTRODE MATERIAL**	316 SST

TRANSMITTER

TRANSMITTER TAG NO.	FIT-40-1	**HAZARDOUS APPROVALS**	N/A
MOUNTING	INTEGRAL	**EMPTY PIPE DETECTION**	YES
ENCLOSURE CLASS	NEMA 4X	**BI DIRECTIONAL FLOW**	NO
POWER	120VAC-1P	**PULSE OUTPUT**	NO
AMBIENT TEMPERATURE	[*]	**RELAY OPTIONS**	NO
OUTPUT	4-20 MA	**POTTED ELECTRONICS**	NO
SURGE PROTECTION	YES	**CATHODIC PROT. LINE**	NO

NOTES

ULTRAMAG FUSION BONDED EPOXY LINER IS ACCEPTABLE. PROVIDE WITH 316SST GROUNDING RINGS.

Engineers...*Working Wonders With Water®*

Magnetic Flow Transmitter

PROJECT INFORMATION

PLANT	GIBSON OAKS WPF	**CUSTOMER**	POLK COUNTY UTILITIES
PROJECT	9621C10	**LOCATION**	POLK COUNTY, FL

GENERAL NOTE: FIELDS SHOWN WITH THE [*] SYMBOL ARE NOT SHOWN ON THE DATASHEET BUT MAY BE REQUIRED BY THE CONTRACT DOCUMENTS. THE CONTRACTOR SHALL SUBMIT COMPLETE ISA DATASHEETS FOR EACH INSTRUMENT PER ALL SPECIFIED REQUIREMENTS.

GENERAL

SPECIFICATION NUMBER	17302	**MEASURING PRINCIPLE**	MAGNETIC
DRAWING NUMBER	70N001	**PLC**	PLC-1-1
SERVICE	FLOW METER	**POWER LOCATION**	LP-1
		TYPICAL DETAIL(S)	[*]

CONNECTION

LINE SIZE	16"	**PROCESS CONNECTION**	ANSI 150
LINE MATERIAL	[*]	**PROCESS CONN. MATERIAL**	STEEL

FLUID

FLUID	FINISHED WATER	**PRESSURE**	125 PSI
NOMINAL FLOW	5500 GPM	**TEMPERATURE**	N/A
FLOW RANGE	0-7000 GPM	**VISCOSITY**	N/A
		CONDUCTIVITY	N/A

ELEMENT

ELEMENT TAG NO.	FE-70-1	**PROCESS CONNECTION**	ANSI 150
ENCLOSURE CLASS	NEMA 4X	**LINER MATERIAL**	HARD RUBBER
HAZARDOUS APPROVALS	N/A	**VACUUM POSSIBILITY**	NO
TUBE SIZE	16"	**ELECTRODE TYPE**	MFR. STD.
TUBE MATERIAL	MFR. STD.	**ELECTRODE MATERIAL**	316 SST

TRANSMITTER

TRANSMITTER TAG NO.	FIT-70-1	**HAZARDOUS APPROVALS**	N/A
MOUNTING	INTEGRAL	**EMPTY PIPE DETECTION**	YES
ENCLOSURE CLASS	NEMA 4X	**BI DIRECTIONAL FLOW**	YES
POWER	120VAC-1P	**PULSE OUTPUT**	NO
AMBIENT TEMPERATURE	[*]	**RELAY OPTIONS**	NO
OUTPUT	4-20 MA	**POTTED ELECTRONICS**	NO
SURGE PROTECTION	YES	**CATHODIC PROT. LINE**	NO

NOTES

ULTRAMAG FUSION BONDED EPOXY LINER IS ACCEPTABLE. PROVIDE WITH 316SST GROUNDING RINGS.

Magnetic Flow Transmitter

PROJECT INFORMATION

PLANT GIBSON OAKS WPF
PROJECT 9621C10

CUSTOMER POLK COUNTY UTILITIES
LOCATION POLK COUNTY, FL

GENERAL NOTE: FIELDS SHOWN WITH THE [*] SYMBOL ARE NOT SHOWN ON THE DATASHEET BUT MAY BE REQUIRED BY THE CONTRACT DOCUMENTS. THE CONTRACTOR SHALL SUBMIT COMPLETE ISA DATASHEETS FOR EACH INSTRUMENT PER ALL SPECIFIED REQUIREMENTS.

GENERAL

SPECIFICATION NUMBER 17302
DRAWING NUMBER 80N002
SERVICE FLOW METER

MEASURING PRINCIPLE MAGNETIC
PLC PLC-1-2
POWER LOCATION LP-1
TYPICAL DETAIL(S) [*]

CONNECTION

LINE SIZE [*]
LINE MATERIAL [*]

PROCESS CONNECTION WAFER
PROCESS CONN. MATERIAL NON-METALLIC

FLUID

FLUID SODIUM HYPOCHLORITE
NOMINAL FLOW 13 GPM
FLOW RANGE 0-16 GPM

PRESSURE 125 PSI
TEMPERATURE N/A
VISCOSITY N/A
CONDUCTIVITY N/A

ELEMENT

ELEMENT TAG NO. FE-81-1
ENCLOSURE CLASS NEMA 4X
HAZARDOUS APPROVALS N/A
TUBE SIZE 1"
TUBE MATERIAL STAINLESS STEEL

PROCESS CONNECTION WAFER
LINER MATERIAL CERAMIC
VACUUM POSSIBILITY NO
ELECTRODE TYPE MFR. STD.
ELECTRODE MATERIAL PLATINUM

TRANSMITTER

TRANSMITTER TAG NO. FIT-81-1
MOUNTING REMOTE
ENCLOSURE CLASS NEMA 4X
POWER 120VAC-1P
AMBIENT TEMPERATURE [*]
OUTPUT RELAY
SURGE PROTECTION YES

HAZARDOUS APPROVALS N/A
EMPTY PIPE DETECTION YES
BI DIRECTIONAL FLOW NO
PULSE OUTPUT YES
RELAY OPTIONS YES
POTTED ELECTRONICS NO
CATHODIC PROT. LINE NO

NOTES

[*]

Magnetic Flow Transmitter

PROJECT INFORMATION

PLANT	GIBSON OAKS WPF	**CUSTOMER**	POLK COUNTY UTILITIES
PROJECT	9621C10	**LOCATION**	POLK COUNTY, FL

GENERAL NOTE: FIELDS SHOWN WITH THE [*] SYMBOL ARE NOT SHOWN ON THE DATASHEET BUT MAY BE REQUIRED BY THE CONTRACT DOCUMENTS. THE CONTRACTOR SHALL SUBMIT COMPLETE ISA DATASHEETS FOR EACH INSTRUMENT PER ALL SPECIFIED REQUIREMENTS.

GENERAL

SPECIFICATION NUMBER	17302	**MEASURING PRINCIPLE**	MAGNETIC
DRAWING NUMBER	80N003	**PLC**	PLC-1-2
SERVICE	FLOW METER	**POWER LOCATION**	LP-1
		TYPICAL DETAIL(S)	[*]

CONNECTION

LINE SIZE	[*]	**PROCESS CONNECTION**	WAFER
LINE MATERIAL	[*]	**PROCESS CONN. MATERIAL**	NON-METALLIC

FLUID

FLUID	SODIUM HYPOCHLORITE	**PRESSURE**	125 PSI
NOMINAL FLOW	13 GPM	**TEMPERATURE**	N/A
FLOW RANGE	0-16 GPM	**VISCOSITY**	N/A
		CONDUCTIVITY	N/A

ELEMENT

ELEMENT TAG NO.	FE-81-3	**PROCESS CONNECTION**	WAFER
ENCLOSURE CLASS	NEMA 4X	**LINER MATERIAL**	CERAMIC
HAZARDOUS APPROVALS	N/A	**VACUUM POSSIBILITY**	NO
TUBE SIZE	1"	**ELECTRODE TYPE**	MFR. STD.
TUBE MATERIAL	STAINLESS STEEL	**ELECTRODE MATERIAL**	PLATINUM

TRANSMITTER

TRANSMITTER TAG NO.	FIT-81-3	**HAZARDOUS APPROVALS**	N/A
MOUNTING	REMOTE	**EMPTY PIPE DETECTION**	YES
ENCLOSURE CLASS	NEMA 4X	**BI DIRECTIONAL FLOW**	NO
POWER	120VAC-1P	**PULSE OUTPUT**	YES
AMBIENT TEMPERATURE	[*]	**RELAY OPTIONS**	YES
OUTPUT	RELAY	**POTTED ELECTRONICS**	NO
SURGE PROTECTION	YES	**CATHODIC PROT. LINE**	NO

NOTES

[*]

THIS PAGE INTENTIONALLY LEFT BLANK

SECTION 17316

FLOW MEASUREMENT: ROTAMETERS (VARIABLE AREA FLOWMETERS)

PART 1 GENERAL

1.01 SUMMARY

A. Section includes:
   1. Rotameters (variable area flowmeters).

B. Provide all instruments identified in the Contract Documents.

1.02 REFERENCES

A. As specified in Section 17050 - Common Work Results for Process Control and Instrumentation Systems.

1.03 DEFINITIONS

A. As specified in Section 17050 - Common Work Results for Process Control and Instrumentation Systems.

1.04 SUBMITTALS

A. Furnish submittals as specified in Sections 01330 - Submittal Procedures and 17050 - Common Work Results for Process Control and Instrumentation Systems.

1.05 QUALITY ASSURANCE

A. As specified in Section 17050 - Common Work Results for Process Control and Instrumentation Systems.

B. Examine the complete set of Contract Documents and verify that the instruments are compatible with the installed conditions including:
   1. Process conditions: Fluids, pressures, temperatures, flows, materials, etc.
   2. Physical conditions:
      a. Installation and mounting requirements.
      b. Location within the process.
      c. Accessories: Verify that all required accessories are provided and are compatible with the process conditions and physical installation.

C. Notify the Engineer if any installation condition does not meet the instrument manufacturer’s recommendations or specifications.

1.06 DELIVERY, STORAGE, AND HANDLING

A. As specified in Section 17050 - Common Work Results for Process Control and Instrumentation Systems.

1.07 PROJECT OR SITE CONDITIONS

A. As specified in Section 17050 - Common Work Results for Process Control and Instrumentation Systems.

1.08 WARRANTY

A. As specified in Section 17050 - Common Work Results for Process Control and Instrumentation Systems.

1.09 MAINTENANCE

A. As specified in Section 17050 - Common Work Results for Process Control and Instrumentation Systems.

PART 2 PRODUCTS

2.01 MANUFACTURERS

A. One of the following or equal:
   1. ABB.
   2. Brooks.
   3. King Instrument Co.

2.02 MANUFACTURED UNITS

A. Rotameters:
   1. General:
      a. Variable area type flowmeters with local flow indication.
      b. Glass tube type.
   2. Performance requirements:
      a. Flow range:
         1) As specified in instrument data sheets or instrument index.
      b. Accuracy:
         1) Glass tube: Within 2.0 percent of range.
         2) Repeatability: 0.50 percent of range.
   3. Element:
      a. Flow tube:
         1) Glass tube: Borosilicate glass, or as required to be compatible with the process conditions.
      b. Turndown: 10 to 1.
      c. Process temperature:
         1) Glass tube: 32 to 200 degrees Fahrenheit.
      d. Maximum process pressure:
         1) Glass tube: 100 pounds per square inch gauge.
         2) Size tube for the largest of the following:
            a) 2.0 times the normal flow rate.
            b) 1.2 times the maximum flow rate.
            c) 4.0 times the minimum flow rate.
      e. Float:
         1) 316 Stainless Steel.

4. Components:
    a. Seals: O-rings or packing glands fully compatible with process fluid.
    b. Integral needle valve for flow control.
5. Scale:
    a. Metal tube: Dial indicator with rotatable magnet coupled to magnet encapsulated in rotameter float.
6. Other:
    a. Process connection:
        1) 316 Stainless Steel, NPT.
    b. Mounting:
        1) As indicated on the Drawings.
        2) Provide all necessary hardware for rotameter mounting.

2.03 ACCESSORIES (NOT USED)

2.04 SOURCE QUALITY CONTROL

A. As specified in Section 17050 - Common Work Results for Process Control and Instrumentation Systems.

PART 3 EXECUTION

3.01 EXAMINATION (NOT USED)

3.02 PREPARATION (NOT USED)

3.03 INSTALLATION

A. As specified in Section 17050 - Common Work Results for Process Control and Instrumentation Systems.

B. Coordinate the installation with all trades to ensure that the mechanical system has all necessary appurtenances including weld-o-lets, valves, etc. for proper installation of instruments.

3.04 FIELD QUALITY CONTROL

A. As specified in Section 17050 - Common Work Results for Process Control and Instrumentation Systems.

3.05 ADJUSTING

A. Verify factory calibration of all instruments in accordance with the manufacturer’s instructions:
    1. Return factory calibrated devices to the factory if they do not meet the field verification requirements for calibration.

3.06 CLEANING

A. As specified in Section 17050 - Common Work Results for Process Control and Instrumentation Systems.

3.07 DEMONSTRATION AND TRAINING

A. As specified in Section 17050 - Common Work Results for Process Control and Instrumentation Systems.

B. Demonstrate performance of all instruments to the Engineer before commissioning.

3.08 PROTECTION

A. As specified in Section 17050 - Common Work Results for Process Control and Instrumentation Systems.

3.09 SCHEDULES

A. The provided information does not necessarily include all required instruments. Provide all instruments identified in the Contract Documents:
   1. Instruments may be indicated on the Drawings, specified in the Specifications, or both.

END OF SECTION

A/E: Carollo Engineers, Inc.

Contractor:
Project:
Customer:
Plant:
Location:
BOM No.:
File:

VARIABLE AREA FLOWMETERS (ROTAMETERS)

No	By	Date	Revision

Spec. No.		Rev.
17316		
Contract		Date
Req.		P.O.
By	Chk	App

	1	Instrument Tag Number		FI-70-1		FI-50-1					
	2	Service		Chlorine Sample Flow		Chlorine Sample Line					
G	3	P&ID		70N01		40N01					
E	4	Function		Local Indicator		Local Indicator					
N	5	Mounting		Line		Line					
E	6	Power Supply		N/A		N/A					
R	7	Conn. Size	Type								
A	8	Inlet Dir.	Outlet Dir.	Vert.	Vert.	Vert.	Vert.				
L	9	Fitting Material									
	10	Packing or O-ring Mat'l.									
	11	Enclosure Type		N/A		N/A					
	12	Size	Float Guide								
M	13	Tube Mat'l.	Float Mat'l.								
E	14	Meter Scale: Lgth. &Type									
T	15	Meter Scale Range									
E	16	Meter Factor		1		1					
R	17	Rated Accuracy									
	18	Hyd. Calib. Required									
F	19	Fluid		Utility Water		Utility Water					
L	20	Color or Transparency									
U	21	Max. Flow Rate		10 GPM		10 GPM					
I	22	Norm Flow	Min Flow								
D	23	Oper. Sp. Gr. (Liq.)									
	24	Max. Oper. Viscosity									
D	25	Oper. Press.	Oper. Temp.								
A	26	Oper. Density (Gas)									
T	27	Std. Dens.	Mol. Wgt.								
A	28	Max. Allow. Press. Drop									
	29	Other									
E	30	Extension Well Mat'l.		N/A		N/A					
X	31	Gasket Mat'l.		N/A		N/A					
T	32	Other		N/A		N/A					
X	33	Xmtr Output		N/A		N/A					
M	34	Xmtr Enclosure Class		N/A		N/A					
T	35	Scale Range		N/A		N/A					
R	36	Other		N/A		N/A					
A	37	# Contacts	Form	N/A	N/A	N/A	N/A				
L	38	Rating	Housing	N/A	N/A	N/A	N/A				
M	39	Action		N/A		N/A					
	40	Other		N/A		N/A					
	41	Valve Size & Material		N/A		N/A					
O	42	Valve Location		N/A		N/A					
P	43	Cnst. Diff. Relay Mat'l.		N/A		N/A					
T	44	Purge Meter Tubing		N/A		N/A					
S	45	Airset		N/A		N/A					
	46	Other		N/A		N/A					
	47	Manufacturer									
	48	Model Number									
	49	Tube Number									
	50	Float Number									

Notes:

SECTION 17402

PRESSURE/VACUUM MEASUREMENT: INSTRUMENT VALVES

PART 1 GENERAL

1.01 SUMMARY

A. Section includes:
   1. Valve manifolds and instrument valves.

B. Provide all valves identified in the Contract Documents.

1.02 REFERENCES

A. As specified in Section 17050 - Common Work Results for Process Control and Instrumentation Systems.

1.03 DEFINITIONS

A. As specified in Section 17050 - Common Work Results for Process Control and Instrumentation Systems.

1.04 SUBMITTALS

A. Furnish submittals as specified in Sections 01330 - Submittal Procedures and 17050 - Common Work Results for Process Control and Instrumentation Systems.

B. Additional requirements:
   1. Product data:
      a. Valve type.
      b. Body material.
      c. Size.
      d. Options.
   2. Shop drawings:
      a. Mounting details for all manifold valves.

1.05 QUALITY ASSURANCE

A. As specified in Section 17050 - Common Work Results for Process Control and Instrumentation Systems.

B. Examine the complete set of Contract Documents and verify that the valves are compatible with the installed conditions including:
   1. Process conditions: Fluids, pressures, temperatures, flows, materials, etc.
   2. Physical conditions:
      a. Installation and mounting requirements.
      b. Location within the process.
      c. Accessories: Verify that all required accessories are provided and are compatible with the process conditions and physical installation.

C. Notify the Engineer if any installation condition does not meet the valve manufacturer's recommendations or specifications.

D. Provide valves manufactured at facilities certified to the quality standards of ISO 9001.

1.06 DELIVERY, STORAGE, AND HANDLING

A. As specified in Section 17050 - Common Work Results for Process Control and Instrumentation Systems.

B. Protect valve manifolds and protective coatings from damage during handling and installation. Repair coating where damaged.

1.07 PROJECT OR SITE CONDITIONS

A. Project environmental conditions as specified in Section 17050 - Common Work Results for Process Control and Instrumentation Systems.
   1. Provide valves suitable for the installed site conditions including, but not limited to, material compatibility, process, and ambient temperatures.

1.08 WARRANTY

A. As specified in Section 17050 - Common Work Results for Process Control and Instrumentation Systems.

1.09 MAINTENANCE

A. As specified in Section 17050 - Common Work Results for Process Control and Instrumentation Systems.

B. Furnish all parts, materials, fluids, etc. necessary for operation, maintenance, and calibration purposes throughout the warranty period. Deliver all of these supplies before project substantial completion.

PART 2 PRODUCTS

2.01 MANUFACTURERS

A. Valve manifold:
   1. One of the following or equal:
      a. Anderson Greenwood.
      b. Hex Valve.
      c. Noshok.
      d. Emerson, Rosemount.

B. Block and bleed valve:
   1. One of the following or equal:
      a. Anderson Greenwood.
      b. Hex Valve.

C. Gauge valve:
  1. One of the following or equal:
     a. Anderson Greenwood.
     b. Hex Valve.

2.02 MANUFACTURED UNITS

A. Valve manifolds:
  1. General:
     a. Provide 2-valve, 3-valve, blowdown type 5-valve, or metering type 5-valve manifolds as indicated on the Drawings.
     b. Valve manifolds shall have 1-piece bonnet with a metal to metal seal to the valve body below the bonnet threads.
  2. Requirements:
     a. Bonnet lock pin to prevent accidental loosening.
     b. Gas leak tested metal-to-metal hard seat design for hard seat valves.
     c. Gas leak tested soft seat design with replaceable seat for soft seat valves.
     d. Manifold valves shall have straight through portion for bi-directional flow and easy roddable cleaning.
     e. Manifold valves shall allow for direct or remote instrument mounting.
     f. Shall be able to withstand pressures up to 6,000 pounds per square inch for soft seat valves and 10,000 pounds per square inch for hard seat valves at maximum 200 degrees Fahrenheit.
     g. Materials of construction:
        1) Body material: Type 316 stainless steel.
        2) O-Ring: Teflon.
     h. 2-Valve manifolds:
        1) 1 isolation valve and 1 drain/vent and calibration valve.
     i. 3-Valve manifolds:
        1) 2 isolation valves and 1 equalizing valve for differential pressure applications.
        2) Plugged vent connections used for vent/drain or calibration.
     j. Blowdown 5-valve manifold:
        1) 2 isolation valves, 1 equalizing valve, 2 blowdown valves for differential pressure applications.
     k. Metering 5-valve manifold:
        1) 2 isolation valves, 2 equalizing valves, 1 vent/drain and calibration valve for differential pressure applications.

B. Block and bleed valves:
  1. General:
     a. Valve shall provide process isolation and venting/draining capabilities.
     b. Gas leak tested metal-to-metal hard seat design for hard seat valves.
     c. Gas leak tested soft seat design with replaceable seat for soft seat valves.
     d. Valve shall not be used with fluids with high solids content, such as raw wastewater or sludge.
  2. Requirements:
     a. Materials of construction:
        1) Body material: Type 316 stainless steel.
        2) O-Ring: Teflon.

C. Gauge valves:
   1. General:
      a. Valve shall provide process isolation from pressure instrument.
      b. Gas leak tested, metal-to-metal hard seat design for hard seat valves.
      c. Gas leak tested soft seat design with replaceable seat for soft seat valves.
   2. Requirements:
      a. Materials of construction:
         1) Body material: Type 316 stainless steel.
         2) O-Ring: Teflon.

2.03 ACCESSORIES

A. Provide tube fitting, female NPT, or pipe butt weld connections if necessary.

B. Provide stainless steel concentric or eccentric pipe nipples when necessary.

2.04 SOURCE QUALITY CONTROL

A. As specified in Section 17050 - Common Work Results for Process Control and Instrumentation Systems.

PART 3 EXECUTION

3.01 EXAMINATION

A. Examine the installation location and verify it will work properly when installed.
   1. Notify the Engineer promptly if any installation condition does not meet the manufacturer’s recommendations or specifications.

3.02 PREPARATION (NOT USED)

3.03 INSTALLATION

A. As specified in Section 17050 - Common Work Results for Process Control and Instrumentation Systems.

B. Coordinate the installation with all trades to ensure that the mechanical system has all necessary appurtenances including weld-o-lets, valves, etc. for proper installation of all valves.

3.04 FIELD QUALITY CONTROL

A. As specified in Section 17050 - Common Work Results for Process Control and Instrumentation Systems.

3.05 ADJUSTING

A. As specified in Section 17950 - Testing, Calibration, and Commissioning.

3.06 CLEANING

A. As specified in Section 17050 - Common Work Results for Process Control and Instrumentation Systems.

3.07 DEMONSTRATION AND TRAINING

A. As specified in Section 17050 - Common Work Results for Process Control and Instrumentation Systems.

B. Demonstrate performance of all valves to the Engineer before commissioning.

3.08 PROTECTION

A. As specified in Section 17050 - Common Work Results for Process Control and Instrumentation Systems.

3.09 SCHEDULES (NOT USED)

END OF SECTION

SECTION 17403

PRESSURE/VACUUM MEASUREMENT: SWITCHES

PART 1 GENERAL

1.01 SUMMARY

A. Section includes:
   1. Pressure/vacuum switches.

B. Provide all instruments specified in the Contract Documents.

1.02 REFERENCES

A. As specified in Section 17050 - Common Work Results for Process Control and Instrumentation Systems.

1.03 DEFINITIONS

A. As specified in Section 17050 - Common Work Results for Process Control and Instrumentation Systems.

1.04 SUBMITTALS

A. Furnish submittals as specified in Sections 01330 - Submittal Procedures and 17050 - Common Work Results for Process Control and Instrumentation Systems.

B. Additional requirements:
   1. Product data:
      a. Accessories such as diaphragm seals, valve manifold, snubbers, and pulsation dampeners.

1.05 QUALITY ASSURANCE

A. As specified in Section 17050 - Common Work Results for Process Control and Instrumentation Systems.

B. Examine the complete set of Contract Documents and verify that the instruments are compatible with the installed conditions including:
   1. Process conditions: Fluids, pressures, temperatures, flows, materials, etc.
   2. Physical conditions:
      a. Installation and mounting requirements.
      b. Location within the process.
      c. Accessories: Verify that all required accessories are provided and are compatible with the process conditions and physical installation.

C. Notify the Engineer if any installation condition does not meet the instrument manufacturer’s recommendations or specifications.

1.06 DELIVERY, STORAGE, AND HANDLING

A. As specified in Section 17050 - Common Work Results for Process Control and Instrumentation Systems.

1.07 PROJECT OR SITE CONDITIONS

A. Project environmental conditions as specified in Section 17050 - Common Work Results for Process Control and Instrumentation Systems.
   1. Provide instruments suitable for the installed site conditions including, but not limited to, material compatibility, site altitude, site seismic conditions, humidity, and process and ambient temperatures.

1.08 WARRANTY

A. As specified in Section 17050 - Common Work Results for Process Control and Instrumentation Systems.

1.09 MAINTENANCE

A. Furnish all parts, materials, fluids, etc. necessary for operation, maintenance, and calibration purposes throughout the warranty period. Deliver all of these supplies before project substantial completion.

PART 2 PRODUCTS

2.01 MANUFACTURERS

A. Mechanical type pressure switch: One of the following or equal:
   1. Ashcroft, B Series Type 400.
   2. Ametek.
   3. Wika.

2.02 MANUFACTURED UNITS

A. Mechanical type pressure switches:
   1. General:
      a. Pressure switch shall be diaphragm or diaphragm-sealed piston type.
   2. Performance requirements:
      a. Pressure range:
         1) As shown on the P&IDs.
      b. Accuracy:
         1) Within 1.0 percent of range.
      c. Repeatability:
         1) Within 1.0 percent of range.
   3. Element:
      a. Type: Diaphragm, diaphragm-sealed piston, or bourdon tube.
      b. Overpressure:
         1) Minimum 130 percent of maximum range pressure without damage to switch or sensing element.
         2) Minimum 400 percent of nominal range without leakage or rupture.
      c. Sensing element shall not require ambient temperature compensation.

            d. Wetted materials: Stainless steel.
            e. Setpoint:
                1) Single.
                2) Switch shall activate at setpoint on increasing pressure for high-pressure alarm applications and on decreasing pressure for low-pressure alarm applications.
            f. Adjustable deadband.
            g. Switch elements:
                1) Snap acting.
                2) Single-pole double-throw (SPDT).
                3) Rated at 5 A, 125/250 VAC.
                4) Automatic reset type.
            h. Enclosure: Epoxy coated:
                1) NEMA Type 4X.
            i. Switch mounting:
                1) Process connection: 1/2-inch NPT.
        4. Components:
            a. Provide all necessary hardware for pressure switch mounting.

2.03 ACCESSORIES

A. Provide diaphragm seals as specified in data sheets or as indicated on the Drawings and as specified in Section 17401 - Pressure/Vacuum Measurement: Diaphragm and Annular Seals:
    1. Diaphragm seal and pressure switch shall be assembled by manufacturer and shipped as an assembly.

B. Furnish block and bleed valves as specified in Section 17402 - Pressure/Vacuum Measurement: Instrument Valves.

2.04 SOURCE QUALITY CONTROL

A. As specified in Section 17050 - Common Work Results for Process Control and Instrumentation Systems.

B. Factory calibrate each instrument with a minimum 3-point calibration or according to Manufacturer’s standard at a facility that is traceable to the NIST.
    1. Submit calibration data sheets to the Engineer at least 30 days before shipment of the instruments to the project site.

PART 3 EXECUTION

3.01 EXAMINATION (NOT USED)

3.02 PREPARATION (NOT USED)

3.03 INSTALLATION

A. As specified in Section 17050 - Common Work Results for Process Control and Instrumentation Systems.

B. Coordinate the installation with all trades to ensure that the mechanical system has all necessary appurtenances including weld-o-lets, valves, etc. for proper installation of instruments.

3.04 FIELD QUALITY CONTROL

A. As specified in Section 17050 - Common Work Results for Process Control and Instrumentation Systems.

3.05 ADJUSTING

A. Verify factory calibration of all instruments in accordance with the manufacturer's instructions:
   1. Return factory calibrated devices to the factory if they do not meet the field verification requirements for calibration.

3.06 CLEANING

A. As specified in Section 17050 - Common Work Results for Process Control and Instrumentation Systems.

3.07 DEMONSTRATION AND TRAINING

A. As specified in Section 17050 - Common Work Results for Process Control and Instrumentation Systems.

3.08 PROTECTION

A. As specified in Section 17050 - Common Work Results for Process Control and Instrumentation Systems.

3.09 SCHEDULES

A. The provided information does not necessarily include all required instruments. Provide all instruments specified in the Contract Documents:
   1. Instruments may be indicated on the Drawings, specified in the Specifications or both.

END OF SECTION

Pressure Switch

SPECIFICATION: 17403

PROJECT INFORMATION

PLANT GIBSON OAKS WPF
PROJECT 9621C10
CUSTOMER POLK COUNTY UTILITIES
LOCATION POLK COUNTY, FL

ELEMENT/SWITCH

GENERAL NOTE: FIELDS SHOWN WITH THE [*] SYMBOL ARE NOT SHOWN ON THE DATASHEET BUT MAY BE REQUIRED BY THE CONTRACT DOCUMENTS. THE CONTRACTOR SHALL SUBMIT COMPLETE ISA DATASHEETS FOR EACH INSTRUMENT PER ALL SPECIFIED REQUIREMENTS.

Tag:	**P&ID**	**SERVICE:**	PRESSURE SWITCH LOW				
PSL-10-1	10N001	**FLUID:**	UTILITY WATER	**HAZARDOUS APP:**	N/A	**POWER:**	[*]
PE1-10-1		**MEASURING PRINCIPLE:**	PRESS SW	**ELEM. ENCL. CLASS:**	NEMA 4X	**POWER LOCATION:**	LOOP
		SET POINT:	10 PSIG OPEN	**ELEMENT MATERIAL:**	MFR. STD.	**OUTPUT:**	RELAY
		MOUNTING:	INTEGRAL	**SWITCH ENCL. CLASS:**	NEMA 4X	**RELAY FORM:**	SPDT
		TYPICAL DETAILS:	[*]	**ENCL. MATERIAL:**	MFR. STD.	**PLC:**	PLC-1-1
		PRESSURE:	[*]	**SURGE PROTECTION:**	NO	**MANUAL RESET:**	NO
		TEMPERATURE:	N/A	**BOTT. HOUSING MAT.:**	MFR. STD.	**SEAL TYPE:**	N/A
		CONN. MOUNTING:	BOTTOM	**INSTRUMENT VALVES:**	BLOCK AND BLEED	**DIAPHRAGM/WET MAT:**	MFR. STD.
Tag:	**P&ID**	**SERVICE:**	PRESSURE SWITCH LOW				
PSL-10-3	10N002	**FLUID:**	UTILITY WATER	**HAZARDOUS APP:**	N/A	**POWER:**	[*]
PE1-10-3		**MEASURING PRINCIPLE:**	PRESS SW	**ELEM. ENCL. CLASS:**	NEMA 4X	**POWER LOCATION:**	LOOP
		SET POINT:	45 PSIG OPEN	**ELEMENT MATERIAL:**	MFR. STD.	**OUTPUT:**	RELAY
		MOUNTING:	INTEGRAL	**SWITCH ENCL. CLASS:**	NEMA 4X	**RELAY FORM:**	SPDT
		TYPICAL DETAILS:	[*]	**ENCL. MATERIAL:**	MFR. STD.	**PLC:**	PLC-3-1
		PRESSURE:	[*]	**SURGE PROTECTION:**	NO	**MANUAL RESET:**	NO
		TEMPERATURE:	N/A	**BOTT. HOUSING MAT.:**	MFR. STD.	**SEAL TYPE:**	N/A
		CONN. MOUNTING:	BOTTOM	**INSTRUMENT VALVES:**	BLOCK AND BLEED	**DIAPHRAGM/WET MAT:**	MFR. STD.
Tag:	**P&ID**	**SERVICE:**	PRESSURE SWITCH LOW				
PSL-10-4	10N002	**FLUID:**	UTILITY WATER	**HAZARDOUS APP:**	N/A	**POWER:**	[*]
PE1-10-4		**MEASURING PRINCIPLE:**	PRESS SW	**ELEM. ENCL. CLASS:**	NEMA 4X	**POWER LOCATION:**	LOOP
		SET POINT:	45 PSIG OPEN	**ELEMENT MATERIAL:**	MFR. STD.	**OUTPUT:**	RELAY
		MOUNTING:	INTEGRAL	**SWITCH ENCL. CLASS:**	NEMA 4X	**RELAY FORM:**	SPDT
		TYPICAL DETAILS:	[*]	**ENCL. MATERIAL:**	MFR. STD.	**PLC:**	PLC-3-1
		PRESSURE:	[*]	**SURGE PROTECTION:**	NO	**MANUAL RESET:**	NO
		TEMPERATURE:	N/A	**BOTT. HOUSING MAT.:**	MFR. STD.	**SEAL TYPE:**	N/A
		CONN. MOUNTING:	BOTTOM	**INSTRUMENT VALVES:**	BLOCK AND BLEED	**DIAPHRAGM/WET MAT:**	MFR. STD.

Engineers...*Working Wonders With Water*®

Pressure Switch

SPECIFICATION: 17403

PROJECT INFORMATION

PLANT GIBSON OAKS WPF
PROJECT 9621C10
CUSTOMER POLK COUNTY UTILITIES
LOCATION POLK COUNTY, FL

ELEMENT/SWITCH

GENERAL NOTE: FIELDS SHOWN WITH THE [*] SYMBOL ARE NOT SHOWN ON THE DATASHEET BUT MAY BE REQUIRED BY THE CONTRACT DOCUMENTS. THE CONTRACTOR SHALL SUBMIT COMPLETE ISA DATASHEETS FOR EACH INSTRUMENT PER ALL SPECIFIED REQUIREMENTS.

Tag:	**P&ID**	**SERVICE:** PRESSURE SWITCH LOW
PSL-52-1 PE1-52-1	50N001	

FLUID: FINISHED WATER
MEASURING PRINCIPLE: PRESS SW
SET POINT: 20 PSIG OPEN
MOUNTING: INTEGRAL
TYPICAL DETAILS: [*]
PRESSURE: [*]
TEMPERATURE: N/A
CONN. MOUNTING: BOTTOM

HAZARDOUS APP: N/A
ELEM. ENCL. CLASS: NEMA 4X
ELEMENT MATERIAL: MFR. STD.
SWITCH ENCL. CLASS: NEMA 4X
ENCL. MATERIAL: MFR. STD.
SURGE PROTECTION: NO
BOTT. HOUSING MAT.: MFR. STD.
INSTRUMENT VALVES: BLOCK AND BLEED

POWER: [*]
POWER LOCATION: LOOP
OUTPUT: RELAY
RELAY FORM: SPDT
PLC: PLC-1-1
MANUAL RESET: NO
SEAL TYPE: N/A
DIAPHRAGM/WET MAT: MFR. STD.

Tag:	**P&ID**	**SERVICE:** PRESSURE SWITCH LOW
PSL-52-2 PE1-52-2	50N001	

FLUID: FINISHED WATER
MEASURING PRINCIPLE: PRESS SW
SET POINT: 20 PSIG OPEN
MOUNTING: INTEGRAL
TYPICAL DETAILS: [*]
PRESSURE: [*]
TEMPERATURE: N/A
CONN. MOUNTING: BOTTOM

HAZARDOUS APP: N/A
ELEM. ENCL. CLASS: NEMA 4X
ELEMENT MATERIAL: MFR. STD.
SWITCH ENCL. CLASS: NEMA 4X
ENCL. MATERIAL: MFR. STD.
SURGE PROTECTION: NO
BOTT. HOUSING MAT.: MFR. STD.
INSTRUMENT VALVES: BLOCK AND BLEED

POWER: [*]
POWER LOCATION: LOOP
OUTPUT: RELAY
RELAY FORM: SPDT
PLC: PLC-1-2
MANUAL RESET: NO
SEAL TYPE: N/A
DIAPHRAGM/WET MAT: MFR. STD.

Tag:	**P&ID**	**SERVICE:** PRESSURE SWITCH LOW
PSL-54-1 PE1-54-1	50N002	

FLUID: FINISHED WATER
MEASURING PRINCIPLE: PRESS SW
SET POINT: 20 PSIG OPEN
MOUNTING: INTEGRAL
TYPICAL DETAILS: [*]
PRESSURE: [*]
TEMPERATURE: N/A
CONN. MOUNTING: BOTTOM

HAZARDOUS APP: N/A
ELEM. ENCL. CLASS: NEMA 4X
ELEMENT MATERIAL: MFR. STD.
SWITCH ENCL. CLASS: NEMA 4X
ENCL. MATERIAL: MFR. STD.
SURGE PROTECTION: NO
BOTT. HOUSING MAT.: MFR. STD.
INSTRUMENT VALVES: BLOCK AND BLEED

POWER: [*]
POWER LOCATION: LOOP
OUTPUT: RELAY
RELAY FORM: SPDT
PLC: PLC-1-1
MANUAL RESET: NO
SEAL TYPE: N/A
DIAPHRAGM/WET MAT: MFR. STD.

Pressure Switch

SPECIFICATION: 17403

PROJECT INFORMATION

PLANT	GIBSON OAKS WPF	**CUSTOMER**	POLK COUNTY UTILITIES
PROJECT	9621C10	**LOCATION**	POLK COUNTY, FL

ELEMENT/SWITCH

GENERAL NOTE: FIELDS SHOWN WITH THE [*] SYMBOL ARE NOT SHOWN ON THE DATASHEET BUT MAY BE REQUIRED BY THE CONTRACT DOCUMENTS. THE CONTRACTOR SHALL SUBMIT COMPLETE ISA DATASHEETS FOR EACH INSTRUMENT PER ALL SPECIFIED REQUIREMENTS.

Tag:	**P&ID**	**SERVICE:**	PRESSURE SWITCH LOW				
PSL-54-2	50N002	**FLUID:**	FINISHED WATER	**HAZARDOUS APP:**	N/A	**POWER:**	[*]
PE1-54-2		**MEASURING PRINCIPLE:**	PRESS SW	**ELEM. ENCL. CLASS:**	NEMA 4X	**POWER LOCATION:**	LOOP
		SET POINT:	20 PSIG OPEN	**ELEMENT MATERIAL:**	MFR. STD.	**OUTPUT:**	RELAY
		MOUNTING:	INTEGRAL	**SWITCH ENCL. CLASS:**	NEMA 4X	**RELAY FORM:**	SPDT
		TYPICAL DETAILS:	[*]	**ENCL. MATERIAL:**	MFR. STD.	**PLC:**	PLC-1-2
		PRESSURE:	[*]	**SURGE PROTECTION:**	NO	**MANUAL RESET:**	NO
		TEMPERATURE:	N/A	**BOTT. HOUSING MAT.:**	MFR. STD.	**SEAL TYPE:**	N/A
		CONN. MOUNTING:	BOTTOM	**INSTRUMENT VALVES:**	BLOCK AND BLEED	**DIAPHRAGM/WET MAT:**	MFR. STD.
Tag:	**P&ID**	**SERVICE:**	PRESSURE SWITCH LOW				
PSL-54-3	50N003	**FLUID:**	FINISHED WATER	**HAZARDOUS APP:**	N/A	**POWER:**	[*]
PE1-54-3		**MEASURING PRINCIPLE:**	PRESS SW	**ELEM. ENCL. CLASS:**	NEMA 4X	**POWER LOCATION:**	LOOP
		SET POINT:	20 PSIG OPEN	**ELEMENT MATERIAL:**	MFR. STD.	**OUTPUT:**	RELAY
		MOUNTING:	INTEGRAL	**SWITCH ENCL. CLASS:**	NEMA 4X	**RELAY FORM:**	SPDT
		TYPICAL DETAILS:	[*]	**ENCL. MATERIAL:**	MFR. STD.	**PLC:**	PLC-1-1
		PRESSURE:	[*]	**SURGE PROTECTION:**	NO	**MANUAL RESET:**	NO
		TEMPERATURE:	N/A	**BOTT. HOUSING MAT.:**	MFR. STD.	**SEAL TYPE:**	N/A
		CONN. MOUNTING:	BOTTOM	**INSTRUMENT VALVES:**	BLOCK AND BLEED	**DIAPHRAGM/WET MAT:**	MFR. STD.
Tag:	**P&ID**	**SERVICE:**	PRESSURE SWITCH HIGH				
PSH-10-1	10N001	**FLUID:**	UTILITY WATER	**HAZARDOUS APP:**	N/A	**POWER:**	[*]
PE2-10-1		**MEASURING PRINCIPLE:**	PRESS SW	**ELEM. ENCL. CLASS:**	NEMA 4X	**POWER LOCATION:**	LOOP
		SET POINT:	30 PSIG OPEN	**ELEMENT MATERIAL:**	MFR. STD.	**OUTPUT:**	RELAY
		MOUNTING:	INTEGRAL	**SWITCH ENCL. CLASS:**	NEMA 4X	**RELAY FORM:**	SPDT
		TYPICAL DETAILS:	[*]	**ENCL. MATERIAL:**	MFR. STD.	**PLC:**	PLC-1-1
		PRESSURE:	0-60 PSIG	**SURGE PROTECTION:**	NO	**MANUAL RESET:**	NO
		TEMPERATURE:	N/A	**BOTT. HOUSING MAT.:**	MFR. STD.	**SEAL TYPE:**	N/A
		CONN. MOUNTING:	BOTTOM	**INSTRUMENT VALVES:**	BLOCK AND BLEED	**DIAPHRAGM/WET MAT:**	MFR. STD.

Pressure Switch

SPECIFICATION: 17403

PROJECT INFORMATION

PLANT GIBSON OAKS WPF
PROJECT 9621C10
CUSTOMER POLK COUNTY UTILITIES
LOCATION POLK COUNTY, FL

ELEMENT/SWITCH

GENERAL NOTE: FIELDS SHOWN WITH THE [*] SYMBOL ARE NOT SHOWN ON THE DATASHEET BUT MAY BE REQUIRED BY THE CONTRACT DOCUMENTS. THE CONTRACTOR SHALL SUBMIT COMPLETE ISA DATASHEETS FOR EACH INSTRUMENT PER ALL SPECIFIED REQUIREMENTS.

Tag:	**P&ID**	**SERVICE:**	PRESSURE SWITCH HIGH				
PSH-10-3	10N002	**FLUID:**	UTILITY WATER	**HAZARDOUS APP:**	N/A	**POWER:**	[*]
PE2-10-3		**MEASURING PRINCIPLE:**	PRESS SW	**ELEM. ENCL. CLASS:**	NEMA 4X	**POWER LOCATION:**	LOOP
		SET POINT:	100 PSIG OPEN	**ELEMENT MATERIAL:**	MFR. STD.	**OUTPUT:**	RELAY
		MOUNTING:	INTEGRAL	**SWITCH ENCL. CLASS:**	NEMA 4X	**RELAY FORM:**	SPDT
		TYPICAL DETAILS:	[*]	**ENCL. MATERIAL:**	MFR. STD.	**PLC:**	PLC-3-1
		PRESSURE:	0-160 PSIG	**SURGE PROTECTION:**	NO	**MANUAL RESET:**	NO
		TEMPERATURE:	N/A	**BOTT. HOUSING MAT.:**	MFR. STD.	**SEAL TYPE:**	N/A
		CONN. MOUNTING:	BOTTOM	**INSTRUMENT VALVES:**	BLOCK AND BLEED	**DIAPHRAGM/WET MAT:**	MFR. STD.
Tag:	**P&ID**	**SERVICE:**	PRESSURE SWITCH HIGH				
PSH-10-4	10N002	**FLUID:**	UTILITY WATER	**HAZARDOUS APP:**	N/A	**POWER:**	[*]
PE2-10-4		**MEASURING PRINCIPLE:**	PRESS SW	**ELEM. ENCL. CLASS:**	NEMA 4X	**POWER LOCATION:**	LOOP
		SET POINT:	100 PSIG OPEN	**ELEMENT MATERIAL:**	MFR. STD.	**OUTPUT:**	RELAY
		MOUNTING:	INTEGRAL	**SWITCH ENCL. CLASS:**	NEMA 4X	**RELAY FORM:**	SPDT
		TYPICAL DETAILS:	[*]	**ENCL. MATERIAL:**	MFR. STD.	**PLC:**	PLC-3-1
		PRESSURE:	0-160 PSIG	**SURGE PROTECTION:**	NO	**MANUAL RESET:**	NO
		TEMPERATURE:	N/A	**BOTT. HOUSING MAT.:**	MFR. STD.	**SEAL TYPE:**	N/A
		CONN. MOUNTING:	BOTTOM	**INSTRUMENT VALVES:**	BLOCK AND BLEED	**DIAPHRAGM/WET MAT:**	MFR. STD.
Tag:	**P&ID**	**SERVICE:**	PRESSURE SWITCH HIGH				
PSH-52-1	50N001	**FLUID:**	FINISHED WATER	**HAZARDOUS APP:**	N/A	**POWER:**	[*]
PE2-52-1		**MEASURING PRINCIPLE:**	PRESS SW	**ELEM. ENCL. CLASS:**	NEMA 4X	**POWER LOCATION:**	LOOP
		SET POINT:	90 PSIG OPEN	**ELEMENT MATERIAL:**	MFR. STD.	**OUTPUT:**	RELAY
		MOUNTING:	INTEGRAL	**SWITCH ENCL. CLASS:**	NEMA 4X	**RELAY FORM:**	SPDT
		TYPICAL DETAILS:	[*]	**ENCL. MATERIAL:**	MFR. STD.	**PLC:**	PLC-1-1
		PRESSURE:	0-160 PSIG	**SURGE PROTECTION:**	NO	**MANUAL RESET:**	NO
		TEMPERATURE:	N/A	**BOTT. HOUSING MAT.:**	MFR. STD.	**SEAL TYPE:**	N/A
		CONN. MOUNTING:	BOTTOM	**INSTRUMENT VALVES:**	BLOCK AND BLEED	**DIAPHRAGM/WET MAT:**	MFR. STD.

Pressure Switch

SPECIFICATION: 17403

PROJECT INFORMATION

PLANT GIBSON OAKS WPF

PROJECT 9621C10

CUSTOMER POLK COUNTY UTILITIES

LOCATION POLK COUNTY, FL

ELEMENT/SWITCH

GENERAL NOTE: FIELDS SHOWN WITH THE [*] SYMBOL ARE NOT SHOWN ON THE DATASHEET BUT MAY BE REQUIRED BY THE CONTRACT DOCUMENTS. THE CONTRACTOR SHALL SUBMIT COMPLETE ISA DATASHEETS FOR EACH INSTRUMENT PER ALL SPECIFIED REQUIREMENTS.

Tag:	**P&ID**	**SERVICE:**	PRESSURE SWITCH HIGH				
PSH-52-2	50N001	**FLUID:**	FINISHED WATER	**HAZARDOUS APP:**	N/A	**POWER:**	[*]
PE2-52-2		**MEASURING PRINCIPLE:**	PRESS SW	**ELEM. ENCL. CLASS:**	NEMA 4X	**POWER LOCATION:**	LOOP
		SET POINT:	90 PSIG OPEN	**ELEMENT MATERIAL:**	MFR. STD.	**OUTPUT:**	RELAY
		MOUNTING:	INTEGRAL	**SWITCH ENCL. CLASS:**	NEMA 4X	**RELAY FORM:**	SPDT
		TYPICAL DETAILS:	[*]	**ENCL. MATERIAL:**	MFR. STD.	**PLC:**	PLC-1-2
		PRESSURE:	0-160 PSIG	**SURGE PROTECTION:**	NO	**MANUAL RESET:**	NO
		TEMPERATURE:	N/A	**BOTT. HOUSING MAT.:**	MFR. STD.	**SEAL TYPE:**	N/A
		CONN. MOUNTING:	BOTTOM	**INSTRUMENT VALVES:**	BLOCK AND BLEED	**DIAPHRAGM/WET MAT:**	MFR. STD.

Tag:	**P&ID**	**SERVICE:**	PRESSURE SWITCH HIGH				
PSH-54-1	50N002	**FLUID:**	FINISHED WATER	**HAZARDOUS APP:**	N/A	**POWER:**	[*]
PE2-54-1		**MEASURING PRINCIPLE:**	PRESS SW	**ELEM. ENCL. CLASS:**	NEMA 4X	**POWER LOCATION:**	LOOP
		SET POINT:	90 PSIG OPEN	**ELEMENT MATERIAL:**	MFR. STD.	**OUTPUT:**	RELAY
		MOUNTING:	INTEGRAL	**SWITCH ENCL. CLASS:**	NEMA 4X	**RELAY FORM:**	SPDT
		TYPICAL DETAILS:	[*]	**ENCL. MATERIAL:**	MFR. STD.	**PLC:**	PLC-1-1
		PRESSURE:	0-160 PSIG	**SURGE PROTECTION:**	NO	**MANUAL RESET:**	NO
		TEMPERATURE:	N/A	**BOTT. HOUSING MAT.:**	MFR. STD.	**SEAL TYPE:**	N/A
		CONN. MOUNTING:	BOTTOM	**INSTRUMENT VALVES:**	BLOCK AND BLEED	**DIAPHRAGM/WET MAT:**	MFR. STD.

Tag:	**P&ID**	**SERVICE:**	PRESSURE SWITCH HIGH				
PSH-54-2	50N002	**FLUID:**	FINISHED WATER	**HAZARDOUS APP:**	N/A	**POWER:**	[*]
PE2-54-2		**MEASURING PRINCIPLE:**	PRESS SW	**ELEM. ENCL. CLASS:**	NEMA 4X	**POWER LOCATION:**	LOOP
		SET POINT:	90 PSIG OPEN	**ELEMENT MATERIAL:**	MFR. STD.	**OUTPUT:**	RELAY
		MOUNTING:	INTEGRAL	**SWITCH ENCL. CLASS:**	NEMA 4X	**RELAY FORM:**	SPDT
		TYPICAL DETAILS:	[*]	**ENCL. MATERIAL:**	MFR. STD.	**PLC:**	PLC-1-2
		PRESSURE:	0-160 PSIG	**SURGE PROTECTION:**	NO	**MANUAL RESET:**	NO
		TEMPERATURE:	N/A	**BOTT. HOUSING MAT.:**	MFR. STD.	**SEAL TYPE:**	N/A
		CONN. MOUNTING:	BOTTOM	**INSTRUMENT VALVES:**	BLOCK AND BLEED	**DIAPHRAGM/WET MAT:**	MFR. STD.

Pressure Switch

SPECIFICATION: 17403

PROJECT INFORMATION

PLANT GIBSON OAKS WPF

PROJECT 9621C10

CUSTOMER POLK COUNTY UTILITIES

LOCATION POLK COUNTY, FL

ELEMENT/SWITCH

GENERAL NOTE: FIELDS SHOWN WITH THE [*] SYMBOL ARE NOT SHOWN ON THE DATASHEET BUT MAY BE REQUIRED BY THE CONTRACT DOCUMENTS. THE CONTRACTOR SHALL SUBMIT COMPLETE ISA DATASHEETS FOR EACH INSTRUMENT PER ALL SPECIFIED REQUIREMENTS.

Tag:	P&ID
PSH-54-3	50N003
PE2-54-3	

SERVICE: PRESSURE SWITCH HIGH

FLUID: FINISHED WATER
MEASURING PRINCIPLE: PRESS SW
SET POINT: 90 PSIG OPEN
MOUNTING: INTEGRAL
TYPICAL DETAILS: [*]
PRESSURE: 0-160 PSIG
TEMPERATURE: N/A
CONN. MOUNTING: BOTTOM

HAZARDOUS APP: N/A
ELEM. ENCL. CLASS: NEMA 4X
ELEMENT MATERIAL: MFR. STD.
SWITCH ENCL. CLASS: NEMA 4X
ENCL. MATERIAL: MFR. STD.
SURGE PROTECTION: NO
BOTT. HOUSING MAT.: MFR. STD.
INSTRUMENT VALVES: BLOCK AND BLEED

POWER: [*]
POWER LOCATION: LOOP
OUTPUT: RELAY
RELAY FORM: SPDT
PLC: PLC-1-1
MANUAL RESET: NO
SEAL TYPE: N/A
DIAPHRAGM/WET MAT: MFR. STD.

SECTION 17404

PRESSURE/VACUUM MEASUREMENT: GAUGES

PART 1 GENERAL

1.01 SUMMARY

A. Section includes:
   1. Pressure/vacuum gauges.

B. Provide all instruments specified in the Contract Documents.

1.02 REFERENCES

A. As specified in Section 17050 - Common Work Results for Process Control and Instrumentation Systems.

B. American Society of Mechanical Engineers (ASME):
   1. B40.100 - Pressure Gauges and Gauge Attachments.

1.03 DEFINITIONS

A. As specified in Section 17050 - Common Work Results for Process Control and Instrumentation Systems.

1.04 SUBMITTALS

A. Furnish submittals as specified in Sections 01330 - Submittal Procedures and 17050 - Common Work Results for Process Control and Instrumentation Systems.

B. Additional requirements:
   1. Product data:
      a. Accessories such as diaphragm seals, valve manifold, snubbers, and pulsation dampeners.

1.05 QUALITY ASSURANCE

A. As specified in Section 17050 - Common Work Results for Process Control and Instrumentation Systems.

B. Examine the complete set of Contract Documents and verify that the instruments are compatible with the installed conditions including:
   1. Process conditions: Fluids, pressures, temperatures, flows, materials, etc.
   2. Physical conditions:
      a. Installation and mounting requirements.
      b. Location within the process.
      c. Accessories: Verify that all required accessories are provided and are compatible with the process conditions and physical installation.

C. Notify the Engineer if any installation condition does not meet the instrument manufacturer's recommendations or specifications.

1.06 DELIVERY, STORAGE, AND HANDLING

A. As specified in Section 17050 - Common Work Results for Process Control and Instrumentation Systems.

1.07 PROJECT OR SITE CONDITIONS

A. As specified in Section 17050 - Common Work Results for Process Control and Instrumentation Systems.

1.08 WARRANTY

A. As specified in Section 17050 - Common Work Results for Process Control and Instrumentation Systems.

1.09 MAINTENANCE

A. As specified in Section 17050 - Common Work Results for Process Control and Instrumentation Systems.

PART 2 PRODUCTS

2.01 MANUFACTURERS

A. One of the following or equal:
   1. Ashcroft:
      a. Maximum pressure less than 10 pounds per square inch: Model 1188.
      b. Maximum pressure greater than or equal to 10 pounds per square inch: Model 1279.
   2. Ametek U.S. Gauge.
   3. Wika.

2.02 MANUFACTURED UNITS

A. General:
   1. Pressure gauge assembly shall include pressure sensing element, gauge case, and dial mechanism.

B. Performance requirements:
   1. Pressure range:
      a. As specified in the Contract Documents.
   2. Accuracy:
      a. Grade 2A, as defined by ASME B40.100.
      b. Within 1.0 percent of span after friction errors are eliminated by tapping or vibration.
      c. Maximum allowable friction inaccuracy: Within 1.0 percent of span.

3. Element:
    a. Where the maximum pressure is less than 10 pounds per square inch, provide socket and bellows; for all other pressure ranges, employ a Bourdon® tube.
    b. Socket tips for bellows and Bourdon® tube:
        1) Materials: Type 316 stainless steel.
    c. Overpressure: Minimum 130 percent of maximum range pressure without damage to gauge or sensing element.
    d. Wetted materials: Type 316 stainless steel.
4. Dial gauge:
    a. Dial size: 4-1/2 inches.
    b. Dial case material:
        1) Maximum pressure less than 10 pounds per square inch:
            a) Phenolic.
        2) Maximum pressure greater than or equal to 10 pounds per square inch:
            a) Phenolic.
    c. Provide safety gauge with safety blow out through the back or top of the unit.
    d. Dial face: Gasketed shatterproof glass or polycarbonate.
    e. Provide gauge locks on all pressure gauges directly connected to diaphragm seals.
    f. Provide gauge locks where possible.
    g. Connection and mounting:
        1) Direct mounted and suitable for outdoor installation.
        2) 1/2-inch NPT.
        3) Connection material: Stainless steel.
    h. Pointer: Externally adjustable.

2.03 ACCESSORIES

A. Pulsation dampeners and snubbers:
    1. Provide pulsation dampener or snubber with each pressure gauge installed on discharge of positive displacement type pump.
    2. Provide piston-type snubber if pressure spikes will exceed 130 percent of gauge maximum range.
    3. Materials: Type 316 stainless steel.
    4. Mount pulsation dampener or snubber integrally to the pressure gauge.
    5. Connection: 1/2-inch NPT.

B. Provide diaphragm seals as specified in the Contract Documents and in Section 17401 - Pressure/Vacuum Measurement: Diaphragm and Annular Seals:
    1. Diaphragm seal and pressure gauge shall be assembled by manufacturer and shipped as an assembly.

C. Provide means for gauge isolation as specified in Section 17402 - Pressure/Vacuum Measurement: Instrument Valves:
    1. Mount valve manifold integrally to the gauge.
    2. Valve manifold and pressure gauge shall be assembled by manufacturer and shipped as an assembly.

2.04 SOURCE QUALITY CONTROL

A. As specified in Section 17050 - Common Work Results for Process Control and Instrumentation Systems.

B. Factory calibrate each pressure gauge at a facility that is traceable to the NIST.

C. Provide complete documentation covering the traceability of all calibration instruments.

PART 3 EXECUTION

3.01 EXAMINATION (NOT USED)

3.02 PREPARATION (NOT USED)

3.03 INSTALLATION

A. As specified in Section 17050 - Common Work Results for Process Control and Instrumentation Systems.

B. Coordinate the installation with all trades to ensure that the mechanical system has all necessary appurtenances including weld-o-lets, valves, etc. for proper installation of instruments.

3.04 FIELD QUALITY CONTROL

A. As specified in Section 17050 - Common Work Results for Process Control and Instrumentation Systems.

3.05 ADJUSTING

A. Verify factory calibration of all instruments in accordance with the manufacturer’s instructions:
   1. Return factory calibrated devices to the factory if they do not meet the field verification requirements for calibration.

3.06 CLEANING

A. As specified in Section 17050 - Common Work Results for Process Control and Instrumentation Systems.

3.07 DEMONSTRATION AND TRAINING

A. As specified in Section 17050 - Common Work Results for Process Control and Instrumentation Systems.

3.08 PROTECTION

A. As specified in Section 17050 - Common Work Results for Process Control and Instrumentation Systems.

3.09 SCHEDULES

A. The provided information does not necessarily include all required instruments. Provide all instruments identified in the Contract Documents:
   1. Instruments may be indicated on the Drawings, specified in the Specifications or both.

END OF SECTION

THIS PAGE INTENTIONALLY LEFT BLANK

Engineers...Working Wonders With Water®

Pressure Gauge

SPECIFICATION: 17404

PROJECT INFORMATION

PLANT GIBSON OAKS WPF
PROJECT 9621C10
CUSTOMER POLK COUNTY UTILITIES
LOCATION POLK COUNTY, FL

ELEMENT/SWITCH

GENERAL NOTE: FIELDS SHOWN WITH THE [*] SYMBOL ARE NOT SHOWN ON THE DATASHEET BUT MAY BE REQUIRED BY THE CONTRACT DOCUMENTS. THE CONTRACTOR SHALL SUBMIT COMPLETE ISA DATASHEETS FOR EACH INSTRUMENT PER ALL SPECIFIED REQUIREMENTS.

Tag: PI-10-1A
P&ID 10N001
SERVICE: PRESSURE INDICATOR
FLUID: UTILITY WATER
TEMPERATURE: [*]
MEASURING PRINCIPLE: DIRECT
TYPICAL DETAILS: [*]
GAUGE RANGE: 0-60 PSIG
CONNECTION TYPE: 1/2 IN NPT
ISOLATION SEALS: N/A
CASE MATERIAL: PHENOLLIC
DIAL SIZE: 4-1/2"
OPTIONS: MOVEMENT DAMPING
BOTT. HOUSING MAT.: 316L STAINLESS STEEL
INSTRUMENT VALVES: BLOCK AND BLEED VALVE
DIAPHRAGM MAT.: 316L STAINLESS STEEL
AMBIENT TEMP: [*]

Tag: PI-10-1B
P&ID 10N001
SERVICE: PRESSURE INDICATOR
FLUID: UTILITY WATER
TEMPERATURE: [*]
MEASURING PRINCIPLE: DIRECT
TYPICAL DETAILS: [*]
GAUGE RANGE: 0-60 PSIG
CONNECTION TYPE: 1/2 IN NPT
ISOLATION SEALS: N/A
CASE MATERIAL: PHENOLLIC
DIAL SIZE: 4-1/2"
OPTIONS: MOVEMENT DAMPING
BOTT. HOUSING MAT.: 316L STAINLESS STEEL
INSTRUMENT VALVES: BLOCK AND BLEED VALVE
DIAPHRAGM MAT.: 316L STAINLESS STEEL
AMBIENT TEMP: [*]

Tag: PI-10-3A
P&ID 10N002
SERVICE: PRESSURE INDICATOR
FLUID: UTILITY WATER
TEMPERATURE: [*]
MEASURING PRINCIPLE: DIRECT
TYPICAL DETAILS: [*]
GAUGE RANGE: 0-160 PSIG
CONNECTION TYPE: 1/2 IN NPT
ISOLATION SEALS: N/A
CASE MATERIAL: PHENOLLIC
DIAL SIZE: 4-1/2"
OPTIONS: MOVEMENT DAMPING
BOTT. HOUSING MAT.: 316L STAINLESS STEEL
INSTRUMENT VALVES: BLOCK AND BLEED VALVE
DIAPHRAGM MAT.: 316L STAINLESS STEEL
AMBIENT TEMP: [*]

Tag: PI-10-3B
P&ID 10N002
SERVICE: PRESSURE INDICATOR
FLUID: UTILITY WATER
TEMPERATURE: [*]
MEASURING PRINCIPLE: DIRECT
TYPICAL DETAILS: [*]
GAUGE RANGE: 0-160 PSIG
CONNECTION TYPE: 1/2 IN NPT
ISOLATION SEALS: N/A
CASE MATERIAL: PHENOLLIC
DIAL SIZE: 4-1/2"
OPTIONS: MOVEMENT DAMPING
BOTT. HOUSING MAT.: 316L STAINLESS STEEL
INSTRUMENT VALVES: BLOCK AND BLEED VALVE
DIAPHRAGM MAT.: 316L STAINLESS STEEL
AMBIENT TEMP: [*]

Engineers...*Working Wonders With Water*®

Pressure Gauge

SPECIFICATION: 17404

PROJECT INFORMATION

PLANT GIBSON OAKS WPF

PROJECT 9621C10

CUSTOMER POLK COUNTY UTILITIES

LOCATION POLK COUNTY, FL

ELEMENT/SWITCH

GENERAL NOTE: FIELDS SHOWN WITH THE [*] SYMBOL ARE NOT SHOWN ON THE DATASHEET BUT MAY BE REQUIRED BY THE CONTRACT DOCUMENTS. THE CONTRACTOR SHALL SUBMIT COMPLETE ISA DATASHEETS FOR EACH INSTRUMENT PER ALL SPECIFIED REQUIREMENTS.

Tag: PI-10-4A
P&ID 10N002
SERVICE: PRESSURE INDICATOR
FLUID: UTILITY WATER
TEMPERATURE: [*]
MEASURING PRINCIPLE: DIRECT
TYPICAL DETAILS: [*]
GAUGE RANGE: 0-160 PSIG
CONNECTION TYPE: 1/2 IN NPT
ISOLATION SEALS: N/A
CASE MATERIAL: PHENOLLIC
DIAL SIZE: 4-1/2"
OPTIONS: MOVEMENT DAMPING
BOTT. HOUSING MAT.: 316L STAINLESS STEEL
INSTRUMENT VALVES: BLOCK AND BLEED VALVE
DIAPHRAGM MAT.: 316L STAINLESS STEEL
AMBIENT TEMP: [*]

Tag: PI-10-4B
P&ID 10N002
SERVICE: PRESSURE INDICATOR
FLUID: UTILITY WATER
TEMPERATURE: [*]
MEASURING PRINCIPLE: DIRECT
TYPICAL DETAILS: [*]
GAUGE RANGE: 0-160 PSIG
CONNECTION TYPE: 1/2 IN NPT
ISOLATION SEALS: N/A
CASE MATERIAL: PHENOLLIC
DIAL SIZE: 4-1/2"
OPTIONS: MOVEMENT DAMPING
BOTT. HOUSING MAT.: 316L STAINLESS STEEL
INSTRUMENT VALVES: BLOCK AND BLEED VALVE
DIAPHRAGM MAT.: 316L STAINLESS STEEL
AMBIENT TEMP: [*]

Tag: PI-52-1
P&ID 50N001
SERVICE: PRESSURE INDICATOR
FLUID: FINISHED WATER
TEMPERATURE: [*]
MEASURING PRINCIPLE: DIRECT
TYPICAL DETAILS: [*]
GAUGE RANGE: 0-160 PSIG
CONNECTION TYPE: 1/2 IN NPT
ISOLATION SEALS: N/A
CASE MATERIAL: PHENOLLIC
DIAL SIZE: 4-1/2"
OPTIONS: MOVEMENT DAMPING
BOTT. HOUSING MAT.: 316L STAINLESS STEEL
INSTRUMENT VALVES: BLOCK AND BLEED VALVE
DIAPHRAGM MAT.: 316L STAINLESS STEEL
AMBIENT TEMP: [*]

Tag: PI-52-2
P&ID 50N001
SERVICE: PRESSURE INDICATOR
FLUID: FINISHED WATER
TEMPERATURE: [*]
MEASURING PRINCIPLE: DIRECT
TYPICAL DETAILS: [*]
GAUGE RANGE: 0-160 PSIG
CONNECTION TYPE: 1/2 IN NPT
ISOLATION SEALS: N/A
CASE MATERIAL: PHENOLLIC
DIAL SIZE: 4-1/2"
OPTIONS: MOVEMENT DAMPING
BOTT. HOUSING MAT.: 316L STAINLESS STEEL
INSTRUMENT VALVES: BLOCK AND BLEED VALVE
DIAPHRAGM MAT.: 316L STAINLESS STEEL
AMBIENT TEMP: [*]

Pressure Gauge

SPECIFICATION: 17404

PROJECT INFORMATION

PLANT GIBSON OAKS WPF

PROJECT 9621C10

CUSTOMER POLK COUNTY UTILITIES

LOCATION POLK COUNTY, FL

ELEMENT/SWITCH

GENERAL NOTE: FIELDS SHOWN WITH THE [*] SYMBOL ARE NOT SHOWN ON THE DATASHEET BUT MAY BE REQUIRED BY THE CONTRACT DOCUMENTS. THE CONTRACTOR SHALL SUBMIT COMPLETE ISA DATASHEETS FOR EACH INSTRUMENT PER ALL SPECIFIED REQUIREMENTS.

Tag: PI-54-1
P&ID 50N002
SERVICE: PRESSURE INDICATOR
FLUID: FINISHED WATER
CONNECTION TYPE: 1/2 IN NPT
BOTT. HOUSING MAT.: 316L STAINLESS STEEL
TEMPERATURE: [*]
ISOLATION SEALS: N/A
INSTRUMENT VALVES: BLOCK AND BLEED VALVE
MEASURING PRINCIPLE: DIRECT
CASE MATERIAL: PHENOLLIC
DIAPHRAGM MAT.: 316L STAINLESS STEEL
TYPICAL DETAILS: [*]
DIAL SIZE: 4-1/2"
AMBIENT TEMP: [*]
GAUGE RANGE: 0-160 PSIG
OPTIONS: MOVEMENT DAMPING

Tag: PI-54-2
P&ID 50N002
SERVICE: PRESSURE INDICATOR
FLUID: FINISHED WATER
CONNECTION TYPE: 1/2 IN NPT
BOTT. HOUSING MAT.: 316L STAINLESS STEEL
TEMPERATURE: [*]
ISOLATION SEALS: N/A
INSTRUMENT VALVES: BLOCK AND BLEED VALVE
MEASURING PRINCIPLE: DIRECT
CASE MATERIAL: PHENOLLIC
DIAPHRAGM MAT.: 316L STAINLESS STEEL
TYPICAL DETAILS: [*]
DIAL SIZE: 4-1/2"
AMBIENT TEMP: [*]
GAUGE RANGE: 0-160 PSIG
OPTIONS: MOVEMENT DAMPING

Tag: PI-54-3
P&ID 50N003
SERVICE: PRESSURE INDICATOR
FLUID: FINISHED WATER
CONNECTION TYPE: 1/2 IN NPT
BOTT. HOUSING MAT.: 316L STAINLESS STEEL
TEMPERATURE: [*]
ISOLATION SEALS: N/A
INSTRUMENT VALVES: BLOCK AND BLEED VALVE
MEASURING PRINCIPLE: DIRECT
CASE MATERIAL: PHENOLLIC
DIAPHRAGM MAT.: 316L STAINLESS STEEL
TYPICAL DETAILS: [*]
DIAL SIZE: 4-1/2"
AMBIENT TEMP: [*]
GAUGE RANGE: 0-160 PSIG
OPTIONS: MOVEMENT DAMPING

Tag: PI-70-1
P&ID 70N001
SERVICE: PRESSURE INDICATOR
FLUID: FINISHED WATER
CONNECTION TYPE: 1/2 IN NPT
BOTT. HOUSING MAT.: 316L STAINLESS STEEL
TEMPERATURE: [*]
ISOLATION SEALS: N/A
INSTRUMENT VALVES: BLOCK AND BLEED VALVE
MEASURING PRINCIPLE: DIRECT
CASE MATERIAL: PHENOLLIC
DIAPHRAGM MAT.: 316L STAINLESS STEEL
TYPICAL DETAILS: [*]
DIAL SIZE: 4-1/2"
AMBIENT TEMP: [*]
GAUGE RANGE: 0-160 PSIG
OPTIONS: MOVEMENT DAMPING

Pressure Gauge

SPECIFICATION: 17404

PROJECT INFORMATION

PLANT GIBSON OAKS WPF
PROJECT 9621C10
CUSTOMER POLK COUNTY UTILITIES
LOCATION POLK COUNTY, FL

ELEMENT/SWITCH

GENERAL NOTE: FIELDS SHOWN WITH THE [*] SYMBOL ARE NOT SHOWN ON THE DATASHEET BUT MAY BE REQUIRED BY THE CONTRACT DOCUMENTS. THE CONTRACTOR SHALL SUBMIT COMPLETE ISA DATASHEETS FOR EACH INSTRUMENT PER ALL SPECIFIED REQUIREMENTS.

Tag: PI-81-1B
P&ID 80N002
SERVICE: PRESSURE INDICATOR
FLUID: SODIUM HYPOCHLORIT
TEMPERATURE: [*]
MEASURING PRINCIPLE: DIRECT
TYPICAL DETAILS: [*]
GAUGE RANGE: 0-60 PSIG
CONNECTION TYPE: 1/2 IN NPT
ISOLATION SEALS: N/A
CASE MATERIAL: PHENOLLIC
DIAL SIZE: 4-1/2"
OPTIONS: [*]
BOTT. HOUSING MAT.: MFR. STD.
INSTRUMENT VALVES: [*]
DIAPHRAGM MAT.: MFR. STD.
AMBIENT TEMP: [*]

Tag: PI-81-2B
P&ID 80N002
SERVICE: PRESSURE INDICATOR
FLUID: SODIUM HYPOCHLORIT
TEMPERATURE: [*]
MEASURING PRINCIPLE: DIRECT
TYPICAL DETAILS: [*]
GAUGE RANGE: 0-60 PSIG
CONNECTION TYPE: 1/2 IN NPT
ISOLATION SEALS: N/A
CASE MATERIAL: PHENOLLIC
DIAL SIZE: 4-1/2"
OPTIONS: [*]
BOTT. HOUSING MAT.: MFR. STD.
INSTRUMENT VALVES: [*]
DIAPHRAGM MAT.: MFR. STD.
AMBIENT TEMP: [*]

Tag: PI-81-3B
P&ID 80N003
SERVICE: PRESSURE INDICATOR
FLUID: SODIUM HYPOCHLORIT
TEMPERATURE: [*]
MEASURING PRINCIPLE: DIRECT
TYPICAL DETAILS: [*]
GAUGE RANGE: 0-60 PSIG
CONNECTION TYPE: 1/2 IN NPT
ISOLATION SEALS: N/A
CASE MATERIAL: PHENOLLIC
DIAL SIZE: 4-1/2"
OPTIONS: [*]
BOTT. HOUSING MAT.: MFR. STD.
INSTRUMENT VALVES: [*]
DIAPHRAGM MAT.: MFR. STD.
AMBIENT TEMP: [*]

Tag: PI-81-4B
P&ID 80N003
SERVICE: PRESSURE INDICATOR
FLUID: SODIUM HYPOCHLORIT
TEMPERATURE: [*]
MEASURING PRINCIPLE: DIRECT
TYPICAL DETAILS: [*]
GAUGE RANGE: 0-60 PSIG
CONNECTION TYPE: 1/2 IN NPT
ISOLATION SEALS: N/A
CASE MATERIAL: PHENOLLIC
DIAL SIZE: 4-1/2"
OPTIONS: [*]
BOTT. HOUSING MAT.: MFR. STD.
INSTRUMENT VALVES: [*]
DIAPHRAGM MAT.: MFR. STD.
AMBIENT TEMP: [*]

SECTION 17405

PRESSURE/VACUUM MEASUREMENT: DIRECT

PART 1 GENERAL

1.01 SUMMARY

A. Section includes:
   1. Pressure transmitters and indicators.

B. Provide all instruments identified in the Contract Documents.

1.02 REFERENCES

A. As specified in Section 17050 - Common Work Results for Process Control and Instrumentation Systems.

1.03 DEFINITIONS

A. As specified in Section 17050 - Common Work Results for Process Control and Instrumentation Systems.

B. Specific definitions:
   1. Lower range value (LRV): Lowest pressure that the pressure transmitter is capable of measuring.
   2. Upper range value (URV): Highest pressure that the pressure transmitter is capable of measuring.
   3. Calibrated range: The range that the pressure transmitter is configured to measure. The low end of the calibrated range must be greater than the LRV of the transmitter. The high end of the calibrated range must be less than or equal to the URV. The calibrated range corresponds to the flow signal sent from the transmitter.

1.04 SUBMITTALS

A. Furnish submittals as specified in Sections 01330 - Submittal Procedures and 17050 - Common Work Results for Process Control and Instrumentation Systems.

B. Provide complete documentation covering the traceability of all calibration instruments.

1.05 QUALITY ASSURANCE

A. As specified in Section 17050 - Common Work Results for Process Control and Instrumentation Systems.

B. Examine the complete set of Contract Documents and verify that the instruments are compatible with the installed conditions including:
   1. Process conditions: Fluids, pressures, temperatures, flows, materials etc.

2. Physical conditions:
   a. Installation and mounting requirements.
   b. Location within the process.
   c. Accessories: Verify that all required accessories are provided and are compatible with the process conditions and physical installation.

C. Notify the Engineer if any installation condition does not meet the instrument manufacturer’s recommendations or specifications.

D. Provide instruments manufactured at facilities certified to the quality standards of ISO 9001.

1.06 DELIVERY, STORAGE, AND HANDLING

A. As specified in Section 17050 - Common Work Results for Process Control and Instrumentation Systems.

1.07 PROJECT OR SITE CONDITIONS

A. As specified in Section 17050 - Common Work Results for Process Control and Instrumentation Systems.

B. Project environmental conditions as specified in Section 17050 - Common Work Results for Process Control and Instrumentation Systems.
   1. Provide instruments suitable for the installed site conditions including, but not limited to, material compatibility, site altitude, site seismic conditions, humidity, and process and ambient temperatures.

1.08 WARRANTY

A. As specified in Section 17050 - Common Work Results for Process Control and Instrumentation Systems.

1.09 MAINTENANCE

A. Furnish all parts, materials, fluids, etc. necessary for operation, maintenance, and calibration purposes throughout the warranty period. Deliver all of these supplies before project substantial completion.

PART 2 PRODUCTS

2.01 MANUFACTURERS

A. One of the following or equal:
   1. Emerson, Rosemount 2051 Series with High performance option
   2. Siemens Sitrans.
   3. Endress & Hauser, Cerabar S Series.

2.02 MANUFACTURED UNITS

A. Pressure transmitters - direct:
   1. General:
      a. Pressure transmitter assembly shall include a diaphragm type pressure transducer and microprocessor-based transmitter for measurement of gauge, vacuum, or absolute pressure.
   2. Performance requirements:
      a. Maximum ratio of total instrument range to calibrated span: 10 to 1.
      b. Accuracy:
         1) Reference accuracy: Plus or minus 0.075 percent of calibrated span, including effects of hysteresis, nonlinearity, and repeatability.
         2) Total performance accuracy: Plus or minus 0.30 percent of calibrated span, including reference accuracy effects, static pressure and ambient temperature effects.
         3) Stability: Plus or minus 0.15 percent of upper range limit over 5 years.
   3. Element:
      a. Diaphragm type transducer integral to pressure transmitter.
      b. Diaphragm material: Stainless steel or ceramic.
      c. Process material compatibility:
         1) Verify all material compatibilities with the instrument manufacturer.
      d. Process connection: As specified in the Instrument Data Sheets.
   4. Transmitter:
      a. Power supply:
         1) 24 VDC - 2 wire loop powered.
         2) Power consumption: 3 VA maximum.
      b. Outputs:
         1) Isolated 4-20mA DC with HART communication protocol.
      c. Provided with electronic microprocessor.
      d. Adjustments: Adjustable electronic zero and span, with elevated or suppressed zero as required by application. Adjustment shall be possible without mechanical fulcrum points or handheld configurator.
      e. Local display:
         1) 5-digit LCD.
         2) Scaled in engineering units.
      f. Enclosure:
         1) NEMA Type 4X.
      g. Over range protection: To maximum process line pressure.
      h. Conduit: 1/2-inch male NPT.
   5. Components:
      a. Transmitter mounting:
         1) As specified in the Instrument Data Sheets.
         2) Provide all necessary hardware for transmitter mounting.

2.03 ACCESSORIES

A. Provide valve manifolds as specified in Section 17402 - Pressure/Vacuum Measurement: Instrument Valves:
   1. Mount valve manifold integrally to the transmitter.

2. Valve manifold and transmitter shall be assembled by Manufacturer and shipped as an assembly.
3. Provide remote or integral diaphragm seals as specified in the Instrument Data Sheets and in Section 17401 - Pressure/Vacuum Measurement: Diaphragm and Annular Seals.

B. Provide sunshades for outdoor installations.

2.04 SOURCE QUALITY CONTROL

A. As specified in Section 17050 - Common Work Results for Process Control and Instrumentation Systems.

B. Factory calibrate each instrument with a minimum 3-point calibration or according to Manufacturer’s standard at a facility that is traceable to the NIST.
   1. Submit calibration data sheets to the Engineer at least 30 days before shipment of the instruments to the project site.

PART 3 EXECUTION

3.01 EXAMINATION

A. Examine the installation location for the instrument and verify that the instrument will work properly when installed.
   1. Notify the Engineer promptly if any installation condition does not meet the instrument manufacturer’s recommendations or specifications.

3.02 PREPARATION (NOT USED)

3.03 INSTALLATION

A. As specified in Section 17050 - Common Work Results for Process Control and Instrumentation Systems.

B. Coordinate the installation with all trades to ensure that the mechanical system has all necessary appurtenances including weld-o-lets, valves, etc. for proper installation of instruments.

3.04 FIELD QUALITY CONTROL

A. As specified in Section 17050 - Common Work Results for Process Control and Instrumentation Systems.

3.05 ADJUSTING

A. As specified in Section 17950 - Testing, Calibration, and Commissioning.

3.06 CLEANING

A. As specified in Section 17050 - Common Work Results for Process Control and Instrumentation Systems.

3.07 DEMONSTRATION AND TRAINING

A. As specified in Section 17050 - Common Work Results for Process Control and Instrumentation Systems.

3.08 PROTECTION

A. As specified in Section 17050 - Common Work Results for Process Control and Instrumentation Systems.

3.09 SCHEDULES

A. The provided information does not necessarily include all required instruments. Provide all instruments identified in the Contract Documents:
   1. Instruments may be indicated on the Drawings, specified in the Specifications, or both.

END OF SECTION

THIS PAGE INTENTIONALLY LEFT BLANK

Engineers...Working Wonders With Water™

Pressure Transmitter

PROJECT INFORMATION

PLANT GIBSON OAKS WPF

PROJECT 9621C10

CUSTOMER POLK COUNTY UTILITIES

LOCATION POLK COUNTY, FL

GENERAL NOTE: FIELDS SHOWN WITH THE [*] SYMBOL ARE NOT SHOWN ON THE DATASHEET BUT MAY BE REQUIRED BY THE CONTRACT DOCUMENTS. THE CONTRACTOR SHALL SUBMIT COMPLETE ISA DATASHEETS FOR EACH INSTRUMENT PER ALL SPECIFIED REQUIREMENTS.

GENERAL

SPECIFICATION NUMBER 17405

DRAWING NUMBER 70N001

SERVICE PRESSURE TRANSMITTER

MEASURING PRINCIPLE DIRECT

PLC PLC-1-1

TYPICAL DETAILS [*]

CONNECTION

CONNECTION TYPE M-NPT

ISOLATION SEALS NONE

INSTRUMENT VALVES BLOCK AND BLEED VALVE

FLUID

FLUID FINISHED WATER

TEMPERATURE N/A

PRESSURE RANGE 0-160 PSIG

ELEMENT

ELEMENT TAG NO. PE-70-1

ENCLOSURE CLASS NEMA 4X

HAZARDOUS APPROVALS N/A

DIAPHRAGM SEAL NO

ANNULAR SEAL NO

ANNULAR SEAL LINE SIZE [*]

DIAPHRAGM MATERIAL MFR. STD.

BOTTOM HOUSING MAT. 316L STAINLESS STEEL

TRANSMITTER

TRANSMITTER TAG NO. PIT-70-1

MOUNTING INTEGRAL

ENCLOSURE CLASS NEMA 4X

AMBIENT TEMPERATURE [*]

OUTPUT 4-20 MA

SURGE PROTECTION YES

NOTES

[*]

Pressure Transmitter

PROJECT INFORMATION

PLANT GIBSON OAKS WPF
PROJECT 9621C10
CUSTOMER POLK COUNTY UTILITIES
LOCATION POLK COUNTY, FL

GENERAL NOTE: FIELDS SHOWN WITH THE [*] SYMBOL ARE NOT SHOWN ON THE DATASHEET BUT MAY BE REQUIRED BY THE CONTRACT DOCUMENTS. THE CONTRACTOR SHALL SUBMIT COMPLETE ISA DATASHEETS FOR EACH INSTRUMENT PER ALL SPECIFIED REQUIREMENTS.

GENERAL

SPECIFICATION NUMBER 17405
DRAWING NUMBER 70N001
SERVICE PRESSURE TRANSMITTER
MEASURING PRINCIPLE DIRECT
PLC PLC-1-2
TYPICAL DETAILS [*]

CONNECTION

CONNECTION TYPE M-NPT
ISOLATION SEALS NONE
INSTRUMENT VALVES BLOCK AND BLEED VALVE

FLUID

FLUID FINISHED WATER
TEMPERATURE N/A
PRESSURE RANGE 0-160 PSIG

ELEMENT

ELEMENT TAG NO. PE-70-2
ENCLOSURE CLASS NEMA 4X
HAZARDOUS APPROVALS N/A
DIAPHRAGM SEAL NO
ANNULAR SEAL NO
ANNULAR SEAL LINE SIZE [*]
DIAPHRAGM MATERIAL MFR. STD.
BOTTOM HOUSING MAT. 316L STAINLESS STEEL

TRANSMITTER

TRANSMITTER TAG NO. PIT-70-2
MOUNTING INTEGRAL
ENCLOSURE CLASS NEMA 4X
AMBIENT TEMPERATURE [*]
OUTPUT 4-20 MA
SURGE PROTECTION YES

NOTES

[*]

SECTION 17406

PRESSURE/VACUUM MEASUREMENT: DIFFERENTIAL

PART 1 GENERAL

1.01 SUMMARY

A. Section includes:
   1. Differential pressure transmitters and indicators.

B. Provide all instruments specified in the Contract Documents.

1.02 REFERENCES

A. As specified in Section 17050 - Common Work Results for Process Control and Instrumentation Systems.

1.03 DEFINITIONS

A. As specified in Section 17050 - Common Work Results for Process Control and Instrumentation Systems.

B. Specific definitions:
   1. Lower range value (LRV): Lowest pressure that the pressure transmitter is capable of measuring.
   2. Upper range value (URV): Highest pressure that the pressure transmitter is capable of measuring.
   3. Calibrated range: The range that the pressure transmitter is configured to measure. The low end of the calibrated range must be greater than the LRV of the transmitter. The high end of the calibrated range must be less than the URV. The calibrated range corresponds to the pressure signal sent from the transmitter. When a Low-Flow Cut-Off is considered, the calibration set points need to be 10 percent, 25 percent, 50 percent, 75 percent, and 100 percent of the output flow-rate rather than starting from 0 percent.

1.04 SUBMITTALS

A. Furnish submittals as specified in Sections 01330 - Submittal Procedures and 17050 - Common Work Results for Process Control and Instrumentation Systems.

B. Product data:
   1. Accessories such as diaphragm seals, valve manifold, snubbers, and pulsation dampeners.

C. Provide complete documentation covering the traceability of all calibration instruments.

1.05 QUALITY ASSURANCE

A. As specified in Section 17050 - Common Work Results for Process Control and Instrumentation Systems.

B. Examine the complete set of Contract Documents and verify that the instruments are compatible with the installed conditions including:
   1. Process conditions: Fluids, pressures, temperatures, flows, materials, etc.
   2. Physical conditions:
      a. Installation and mounting requirements.
      b. Location within the process.
      c. Accessories: Verify that all required accessories are provided and are compatible with the process conditions and physical installation.

C. Notify the Engineer if any installation condition does not meet the instrument manufacturer's recommendations or specifications.

1.06 DELIVERY, STORAGE, AND HANDLING

A. As specified in Section 17050 - Common Work Results for Process Control and Instrumentation Systems.

1.07 PROJECT CONDITIONS

A. Project environmental conditions as specified in Section 17050 - Common Work Results for Process Control and Instrumentation Systems.
   1. Provide instruments suitable for the installed site conditions including, but not limited to, material compatibility, site altitude, site seismic conditions, humidity, and process and ambient temperatures.

1.08 WARRANTY

A. As specified in Section 17050 - Common Work Results for Process Control and Instrumentation Systems.

1.09 MAINTENANCE

A. Furnish all parts, materials, fluids, etc. necessary for operation, maintenance, and calibration purposes throughout the warranty period. Deliver all of these supplies before project substantial completion.

PART 2 PRODUCTS

2.01 MANUFACTURERS

A. One of the following, no equal:
   1. Emerson, Rosemount Series.
   2. Siemens, Sitrans Series
   3. Endress + Hauser, Deltabar S Series.

2.02 MANUFACTURED UNITS

A. Pressure transmitters - differential:
  1. General:
    a. Differential pressure transmitter assembly shall include a diaphragm-type pressure transducer and microprocessor-based transmitter for measurement of differential pressure.
    b. Differential pressure transmitters shall be used for differential pressure, flow, or liquid level measurement as indicated on the Drawings.
  2. Performance requirements:
    a. As specified in data sheets or instrument index.
    b. Maximum ratio of total instrument range to calibrated span: 10 to 1.
    c. Accuracy:
      1) Reference accuracy: Plus or minus 0.075 percent of calibrated span, including effects of hysteresis, nonlinearity, and repeatability.
      2) Total performance accuracy: Plus or minus 0.30 percent of calibrated span, including reference accuracy effects, static pressure and ambient temperature effects.
      3) Stability: Plus or minus 0.15 percent of upper range limit over 5 years.
  3. Element:
    a. Diaphragm-type transducer integral to differential pressure transmitter.
    b. Diaphragm material: Stainless steel or ceramic.
    c. Wetted materials: Stainless steel:
      1) Process material compatibility:
        a) Verify all material compatibilities with the instrument manufacturer.
    d. Diaphragm fill fluid: Silicon Oil.
  4. Transmitter:
    a. Power supply:
      1) 24 VDC - loop powered.
    b. Outputs:
      1) Isolated 4-20 mA DC with HART communication protocol.
    c. Provided with electronic microprocessor.
    d. Adjustments: Adjustable electronic zero and span, with elevated or suppressed zero as required by application. Adjustment shall be possible without mechanical fulcrum points or handheld configurator.
    e. Square root extraction for flow calculation.
    f. Local display:
      1) 5-digit LCD.
      2) Scaled in engineering units.
    g. Enclosure: NEMA Type 4X.
    h. Overrange protection: To maximum process line pressure.
    i. Conduit connection: 1/2-inch male NPT.
  5. Components:
    a. Transmitter mounting:
      1) As specified in the data sheets or instrument index.
      2) Provide all necessary hardware for transmitter mounting.

2.03 ACCESSORIES

A. Provide sunshades for outdoor installations.

B. Provide stainless steel tags for each instrument. Tags shall be labeled as specified in the Contract Documents.

2.04 SOURCE QUALITY CONTROL

A. As specified in Section 17050 - Common Work Results for Process Control and Instrumentation Systems.

B. Each differential pressure transmitter shall be factory calibrated with 5-point calibration at a facility that is traceable to the NIST.

C. Provide complete documentation covering the traceability of all calibration instruments.

PART 3 EXECUTION

3.01 EXAMINATION

A. Examine the installation location for the instrument and verify that the instrument will work properly when installed.
   1. Notify the Engineer promptly if any installation condition does not meet the instrument manufacturer’s recommendations or specifications.

3.02 PREPARATION (NOT USED)

3.03 INSTALLATION

A. As specified in Section 17050 - Common Work Results for Process Control and Instrumentation Systems.

B. Coordinate the installation with all trades to ensure that the mechanical system has all necessary appurtenances including weld-o-lets, valves, etc. for proper installation of instruments.

3.04 FIELD QUALITY CONTROL

A. As specified in Section 17050 - Common Work Results for Process Control and Instrumentation Systems.

3.05 ADJUSTING

A. Verify factory calibration of all instruments in accordance with the manufacturer’s instructions:
   1. Return factory calibrated devices to the factory if they do not meet the field verification requirements for calibration.

3.06 CLEANING

A. As specified in Section 17050 - Common Work Results for Process Control and Instrumentation Systems.

3.07 DEMONSTRATION AND TRAINING

A. As specified in Section 17050 - Common Work Results for Process Control and Instrumentation Systems.

3.08 PROTECTION

A. As specified in Section 17050 - Common Work Results for Process Control and Instrumentation Systems.

3.09 SCHEDULES

A. The provided information does not necessarily include all required instruments. Provide all instruments identified in the Contract Documents:
   1. Instruments may be indicated on the Drawings, specified in the Specifications, or both.

END OF SECTION

THIS PAGE INTENTIONALLY LEFT BLANK

Engineers...Working Wonders With Water™

Pressure Transmitter

PROJECT INFORMATION

PLANT GIBSON OAKS WPF

PROJECT 9621C10

CUSTOMER POLK COUNTY UTILITIES

LOCATION POLK COUNTY, FL

GENERAL NOTE: FIELDS SHOWN WITH THE [*] SYMBOL ARE NOT SHOWN ON THE DATASHEET BUT MAY BE REQUIRED BY THE CONTRACT DOCUMENTS. THE CONTRACTOR SHALL SUBMIT COMPLETE ISA DATASHEETS FOR EACH INSTRUMENT PER ALL SPECIFIED REQUIREMENTS.

GENERAL

SPECIFICATION NUMBER 17406

DRAWING NUMBER 40N001

SERVICE LEVEL PRESSURE DIFFERENTIAL TRANSMITTER

MEASURING PRINCIPLE DIFFERENTIAL

PLC PLC-1-1

TYPICAL DETAILS [*]

CONNECTION

CONNECTION TYPE M-NPT

ISOLATION SEALS N/A

INSTRUMENT VALVES 5 VALVE MANIFOLD

FLUID

FLUID FINISHED WATER

TEMPERATURE [*]

PRESSURE RANGE 0-15 PSIG

ELEMENT

ELEMENT TAG NO. LE-42-1

ENCLOSURE CLASS NEMA 4X

HAZARDOUS APPROVALS N/A

DIAPHRAGM SEAL NO

ANNULAR SEAL NO

ANNULAR SEAL LINE SIZE [*]

DIAPHRAGM MATERIAL MFR. STD.

BOTTOM HOUSING MAT. 316L STAINLESS STEEL

TRANSMITTER

TRANSMITTER TAG NO. LIT-42-1

MOUNTING INTEGRAL

ENCLOSURE CLASS NEMA 4X

AMBIENT TEMPERATURE [*]

OUTPUT 4-20 MA

SURGE PROTECTION YES

NOTES

[*]

Engineers...Working Wonders With Water™

Pressure Transmitter

PROJECT INFORMATION

PLANT	GIBSON OAKS WPF	**CUSTOMER**	POLK COUNTY UTILITIES
PROJECT	9621C10	**LOCATION**	POLK COUNTY, FL

GENERAL NOTE: FIELDS SHOWN WITH THE [*] SYMBOL ARE NOT SHOWN ON THE DATASHEET BUT MAY BE REQUIRED BY THE CONTRACT DOCUMENTS. THE CONTRACTOR SHALL SUBMIT COMPLETE ISA DATASHEETS FOR EACH INSTRUMENT PER ALL SPECIFIED REQUIREMENTS.

GENERAL

SPECIFICATION NUMBER	17406	**MEASURING PRINCIPLE**	DIFFERENTIAL
DRAWING NUMBER	40N001	**PLC**	PLC-1-1
SERVICE	LEVEL PRESSURE DIFFERENTIAL TRANSMITTER	**TYPICAL DETAILS**	[*]

CONNECTION

CONNECTION TYPE	M-NPT	**INSTRUMENT VALVES**	5 VALVE MANIFOLD
ISOLATION SEALS	N/A		

FLUID

FLUID	FINISHED WATER	**PRESSURE RANGE**	0-15 PSIG
TEMPERATURE	[*]		

ELEMENT

ELEMENT TAG NO.	LE-42-2	**ANNULAR SEAL**	NO
ENCLOSURE CLASS	NEMA 4X	**ANNULAR SEAL LINE SIZE**	[*]
HAZARDOUS APPROVALS	N/A	**DIAPHRAGM MATERIAL**	MFR. STD.
DIAPHRAGM SEAL	NO	**BOTTOM HOUSING MAT.**	316L STAINLESS STEEL

TRANSMITTER

TRANSMITTER TAG NO.	LIT-42-2	**AMBIENT TEMPERATURE**	[*]
MOUNTING	INTEGRAL	**OUTPUT**	4-20 MA
ENCLOSURE CLASS	NEMA 4X	**SURGE PROTECTION**	YES

NOTES

[*]

SECTION 17407

PRESSURE MEASUREMENT: SUBMERSIBLE

PART 1 GENERAL

1.01 SUMMARY

A. Section includes:
   1. Submersible pressure transmitters.

B. Provide all instruments identified in the Contract Documents.

1.02 REFERENCES

A. As specified in Section 17050 - Common Work Results for Process Control and Instrumentation Systems.

1.03 DEFINITIONS

A. As specified in Section 17050 - Common Work Results for Process Control and Instrumentation Systems.

1.04 SUBMITTALS

A. Furnish submittals as specified in Sections 01330 - Submittal Procedures, and 17050 - Common Work Results for Process Control and Instrumentation Systems.

B. Provide complete documentation covering the traceability of all calibration instruments.

1.05 QUALITY ASSURANCE

A. As specified in Section 17050 - Common Work Results for Process Control and Instrumentation Systems.

B. Examine the complete set of Contract Documents and verify that the instruments are compatible with the installed conditions including:
   1. Process conditions: Fluids, pressures, temperatures, flows, materials etc.
   2. Physical conditions:
      a. Installation and mounting requirements.
      b. Location within the process.
      c. Accessories: Verify that all required accessories are provided and are compatible with the process conditions and physical installation.

C. Notify the Engineer if any installation condition does not meet the instrument manufacturer's recommendations or specifications.

D. Provide instruments manufactured at facilities certified to the quality standards of ISO 9001.

1.06 DELIVERY, STORAGE, AND HANDLING

A. As specified in Section 17050 - Common Work Results for Process Control and Instrumentation Systems.

1.07 PROJECT OR SITE CONDITIONS

A. Project environmental conditions as specified in Section 17050 - Common Work Results for Process Control and Instrumentation Systems.
   1. Provide instruments suitable for the installed site conditions including, but not limited to, material compatibility, site altitude, site seismic conditions, humidity, and process and ambient temperatures.

1.08 WARRANTY

A. As specified in Section 17050 - Common Work Results for Process Control and Instrumentation Systems.

1.09 MAINTENANCE

A. Furnish all parts, materials, fluids, etc. necessary for operation, maintenance, and calibration purposes throughout the warranty period. Deliver all of these supplies before project substantial completion.

PART 2 PRODUCTS

2.01 MANUFACTURERS

A. Submersible level measurement with 2-wire integral transmitter:
   1. One of the following or equal:
      a. Endress+Hauser, Waterpilot.
      b. Keller, LevelGage
      c. Siemens, Sitrans LH300.

2.02 MANUFACTURED UNITS

A. Submersible level measurement with 2-wire integral transmitter:
   1. General:
      a. Pressure is measured through a diaphragm-type measuring cell and converted to linear pressure measurement.
      b. Each submersible pressure transmitter system shall include:
         1) Signal cable, including pressure compensation tube.
         2) Transducer probe with integral transmitter.
         3) Transmitter cable termination box.
   2. Performance requirements:
      a. Accuracy:
         1) 0.3 percent of range.
      b. Rangeability:
         1) 3:1.
      c. Range:
         1) As indicated on the contract documents.

3. Element:
    a. Sensor housing shall be Type 316L stainless steel or titanium with ceramic, Teflon-coated, or titanium diaphragm.
    b. Protective cap shall be manufacturer's recommended material, chemically resistant to process fluid.
    c. Slip resistant extension cable with pressure compensation tube with Teflon filter.
    d. Enclosure for probe and transmitter assembly shall be NEMA Type 6P.
4. Transmitter:
    a. Power supply:
        1) 24 VDC: 2 wire loop powered.
        2) Power consumption: 18 VA maximum.
    b. Outputs:
        1) Isolated 4 to 20 milliamperes DC.
    c. Without display.
    d. Ambient operating temperature limits of -10 to 70 degrees Celsius (-14 to 158 degrees Fahrenheit).
    e. Transmitter shall be integral to probe housing.
5. Transmitter cable termination box:
    a. NEMA Type 4X.
    b. Equipped with filter or desiccant chamber to eliminate moisture from the pressure compensation tube.
    c. Termination for signal wires and pressure compensation tube.

2.03 ACCESSORIES

A. Type 316L stainless steel mounting clamp with Type 304 stainless steel mounting screws.

B. Provide guide tube for stillwell mounting.

C. Provide additional anchor to prevent movement.

D. Provide cable clamp and strain relief.

E. Provide integral surge protection.

2.04 SOURCE QUALITY CONTROL

A. As specified in Section 17050 - Common Work Results for Process Control and Instrumentation Systems.

B. Factory calibrate each instrument with a minimum 3-point calibration or according to Manufacturer's standard at a facility that is traceable to the NIST.
    1. Submit calibration data sheets to the Engineer at least 30 days before shipment of the instruments to the project site.

PART 3 EXECUTION

3.01 EXAMINATION

A. Examine the installation location for the instrument and verify that the instrument will work properly when installed.
   1. Notify the Engineer promptly if any installation condition does not meet the instrument manufacturer's recommendations or specifications.

3.02 PREPARATION (NOT USED)

3.03 INSTALLATION

A. As specified in Section 17050 - Common Work Results for Process Control and Instrumentation Systems.

B. Coordinate the installation with all trades to ensure that the mechanical system has all necessary appurtenances including weld-o-lets, valves, etc. for proper installation of instruments.

3.04 FIELD QUALITY CONTROL

A. As specified in Section 17050 - Common Work Results for Process Control and Instrumentation Systems.

3.05 ADJUSTING

A. As specified in Section 17950 - Commissioning for Instrumentation and Controls.

3.06 CLEANING

A. As specified in Section 17050 - Common Work Results for Process Control and Instrumentation Systems.

3.07 DEMONSTRATION AND TRAINING

A. As specified in Section 17050 - Common Work Results for Process Control and Instrumentation Systems.

3.08 PROTECTION

A. As specified in Section 17050 - Common Work Results for Process Control and Instrumentation Systems.

3.09 SCHEDULES

A. The provided information does not necessarily include all required instruments. Provide all instruments identified in the Contract Documents:
   1. Instruments may be indicated on the Drawings, specified in the Specifications, or both.

END OF SECTION

Submersible Pressure Transmitter

PROJECT INFORMATION

PLANT GIBSON OAKS WPF

PROJECT 9621C10

CUSTOMER POLK COUNTY UTILITIES

LOCATION POLK COUNTY, FL

GENERAL NOTE: FIELDS SHOWN WITH THE [*] SYMBOL ARE NOT SHOWN ON THE DATASHEET BUT MAY BE REQUIRED BY THE CONTRACT DOCUMENTS. THE CONTRACTOR SHALL SUBMIT COMPLETE ISA DATASHEETS FOR EACH INSTRUMENT PER ALL SPECIFIED REQUIREMENTS.

GENERAL

SPECIFICATION NUMBER 17407

DRAWING NUMBER 10N001

SERVICE LEVEL TRANSMITTER

MEASURING PRINCIPLE DIRECT

PLC PLC-1-1

TYPICAL DETAILS [*]

CONNECTION

CONNECTION TYPE IMMERSION

ISOLATION SEALS N/A

INSTRUMENT VALVES N/A

FLUID

FLUID GROUND WATER

TEMPERATURE [*]

INSTRUMENT RANGE 0-150 FT

ELEMENT

ELEMENT TAG NO. LE-10-1

ENCLOSURE CLASS NEMA 6P

HAZARDOUS APPROVALS N/A

HOUSING MATERIAL MFR. STD.

MEMBRANE MATERIAL MFR. STD.

DIAPHRAGM MATERIAL MFR. STD.

TRANSMITTER

TRANSMITTER TAG NO. LT-10-1

ENCLOSURE CLASS NEMA 6P

TRANS. MOUNTING INTEGRAL

SURGE PROTECTION YES

SIGNAL OUTPUT AI

OUTPUT 4-20 MA

AMBIENT TEMPERATURE [*]

NOTES

[*]

Engineers...*Working Wonders With Water®*

Submersible Pressure Transmitter

PROJECT INFORMATION

PLANT	GIBSON OAKS WPF	**CUSTOMER**	POLK COUNTY UTILITIES
PROJECT	9621C10	**LOCATION**	POLK COUNTY, FL

GENERAL NOTE: FIELDS SHOWN WITH THE [*] SYMBOL ARE NOT SHOWN ON THE DATASHEET BUT MAY BE REQUIRED BY THE CONTRACT DOCUMENTS. THE CONTRACTOR SHALL SUBMIT COMPLETE ISA DATASHEETS FOR EACH INSTRUMENT PER ALL SPECIFIED REQUIREMENTS.

GENERAL

SPECIFICATION NUMBER	17407	**MEASURING PRINCIPLE**	DIRECT
DRAWING NUMBER	10N002	**PLC**	PLC-3-1
SERVICE	LEVEL TRANSMITTER	**TYPICAL DETAILS**	[*]

CONNECTION

CONNECTION TYPE	IMMERSION	**INSTRUMENT VALVES**	N/A
ISOLATION SEALS	N/A		

FLUID

FLUID	GROUND WATER	**INSTRUMENT RANGE**	0-180 FT
TEMPERATURE	[*]		

ELEMENT

ELEMENT TAG NO.	LE-10-3	**HOUSING MATERIAL**	MFR. STD.
ENCLOSURE CLASS	NEMA 6P	**MEMBRANE MATERIAL**	MFR. STD.
HAZARDOUS APPROVALS	N/A	**DIAPHRAGM MATERIAL**	MFR. STD.

TRANSMITTER

TRANSMITTER TAG NO.	LT-10-3	**SIGNAL OUTPUT**	AI
ENCLOSURE CLASS	NEMA 6P	**OUTPUT**	4-20 MA
TRANS. MOUNTING	INTEGRAL	**AMBIENT TEMPERATURE**	[*]
SURGE PROTECTION	YES		

NOTES

[*]

Engineers...Working Wonders With Water®

Submersible Pressure Transmitter

PROJECT INFORMATION

PLANT GIBSON OAKS WPF
PROJECT 9621C10

CUSTOMER POLK COUNTY UTILITIES
LOCATION POLK COUNTY, FL

GENERAL NOTE: FIELDS SHOWN WITH THE [*] SYMBOL ARE NOT SHOWN ON THE DATASHEET BUT MAY BE REQUIRED BY THE CONTRACT DOCUMENTS. THE CONTRACTOR SHALL SUBMIT COMPLETE ISA DATASHEETS FOR EACH INSTRUMENT PER ALL SPECIFIED REQUIREMENTS.

GENERAL

SPECIFICATION NUMBER 17407
DRAWING NUMBER 10N002
SERVICE LEVEL TRANSMITTER

MEASURING PRINCIPLE DIRECT
PLC PLC-3-1
TYPICAL DETAILS [*]

CONNECTION

CONNECTION TYPE IMMERSION
ISOLATION SEALS N/A

INSTRUMENT VALVES N/A

FLUID

FLUID GROUND WATER
TEMPERATURE [*]

INSTRUMENT RANGE 0-180 FT

ELEMENT

ELEMENT TAG NO. LE-10-4
ENCLOSURE CLASS NEMA 6P
HAZARDOUS APPROVALS N/A

HOUSING MATERIAL MFR. STD.
MEMBRANE MATERIAL MFR. STD.
DIAPHRAGM MATERIAL MFR. STD.

TRANSMITTER

TRANSMITTER TAG NO. LT-10-4
ENCLOSURE CLASS NEMA 6P
TRANS. MOUNTING INTEGRAL
SURGE PROTECTION YES

SIGNAL OUTPUT AI
OUTPUT 4-20 MA
AMBIENT TEMPERATURE [*]

NOTES

[*]

SECTION 17501

ANALYZERS: PH

PART 1 GENERAL

1.01 SUMMARY

A. Section includes:
   1. pH instruments.

B. Provide all instruments identified in the Contract Documents.

C. Coordinate provision of pH analyzer with residual chlorine analyzer.

1.02 REFERENCES

A. As specified in Section 17050 - Common Work Results for Process Control and Instrumentation Systems.

B. CSA International (CSA).

1.03 DEFINITIONS

A. As specified in Section 17050 - Common Work Results for Process Control and Instrumentation Systems.

1.04 SUBMITTALS

A. Furnish submittals as specified in Sections 01330 - Submittal Procedures and 17050 - Common Work Results for Process Control and Instrumentation Systems.

B. Provide complete documentation covering the traceability of all calibration instruments.

1.05 QUALITY ASSURANCE

A. As specified in Section 17050 - Common Work Results for Process Control and Instrumentation Systems.

B. Examine the complete set of Contract Documents and verify that the instruments are compatible with the installed conditions including:
   1. Process conditions: Fluids, pressures, temperatures, flows, materials, etc.
   2. Physical conditions:
      a. Installation and mounting requirements.
      b. Location within the process.
      c. Accessories: Verify that all required accessories are provided and are compatible with the process conditions and physical installation.

C. Notify the Engineer if any installation condition does not meet the instrument manufacturer's recommendations or specifications.

D. Provide instruments manufactured at facilities certified to the quality standards of ISO 9001.

1.06 DELIVERY, STORAGE, AND HANDLING

A. As specified in Section 17050 - Common Work Results for Process Control and Instrumentation Systems.

1.07 PROJECT OR SITE CONDITIONS

A. Project environmental conditions as specified in Section 17050 - Common Work Results for Process Control and Instrumentation Systems.
   1. Provide instruments suitable for the installed site conditions including, but not limited to, material compatibility, site altitude, site seismic conditions, humidity, and process and ambient temperatures.

1.08 WARRANTY

A. As specified in Section 17050 - Common Work Results for Process Control and Instrumentation Systems.

1.09 MAINTENANCE

A. Furnish all parts, materials, fluids, etc. necessary for operation, maintenance, and calibration purposes throughout the warranty period. Deliver all of these supplies before project substantial completion.

PART 2 PRODUCTS

2.01 MANUFACTURERS

A. One of the following or equal:
   1. Prominent:
      a. pH Sensor Model PHED 112SE.
      b. Chlorine Sensor Model CLE3-mA.
      c. Transmitter Model Dulcometer DACb.

2.02 MANUFACTURED UNITS

A. pH analyzers:
   1. General:
      a. pH measurement shall use the potentiometric measurement method utilizing a glass electrode. The pH sensitive glass membrane surface reacts to the acid content of the solution with a specific voltage, which is measured relative to a reference electrode.

2. Performance requirements:
    a. Accuracy: Within 0.01 pH.
    b. Stability: Within 0.01 pH/month.
    c. Repeatability: Within 0.01 pH.
3. Element:
    a. Sensor material:
        1) Glass pH sensor housed in a molded reinforced polypropylene body threaded for insertion, submersion, or flow-through installation as indicated on the Drawings and/or instrument data sheets.
        2) Built in temperature sensor.
        3) The reference electrode junction shall be capable of maintaining steady reference signal by resisting plugging in dirty applications.
    b. pH measuring range: 2 to 12 pH.
    c. Temperature measuring range: 0 to 70 degrees Celsius.
    d. Operating temperature range: 0 to 80 degrees Celsius.
    e. Operating pressure range: 0 to 87 pounds per square inch.
    f. Connections:
        1) Process: As specified in the Instrument Data Sheets.
4. Transmitter:
    a. Provide a single transmitter for Temperature, pH, and residual chlorine.
    b. Power supply:
        1) 120 VAC.
        2) Power consumption: 15 VA maximum.
    c. Outputs:
        1) Three isolated 4 to 20 milliamperes DC with.
            a) Proportional to temperature, pH, and residual chlorine.
        2) Relay outputs:
            a) 2 Form C contact, minimum.
            b) Rated 3 amps at 250 VAC.
            c) Programmable.
    d. Display:
        1) Backlit LCD digital display.
    e. Measurement ranges: 0 to 14 pH.
    f. Temperature: 0 to 50 degrees Celsius.
    g. Displayed resolution: Within 0.01 pH.
    h. Ambient conditions:
        1) Operable from 0 to 50 degrees Celsius.
        2) Relative humidity 0 to 95 percent.
    i. Mechanical:
        1) Enclosure rating:
            a) NEMA Type 4X (IP65).
        2) Mounting:
            a) Panel mount suitable for mounting in an enclosure that includes gasket to maintain weather rating of the panel.
            b) Surface mount enclosures, include self-tapping screws.
            c) Pipe mounting accessories shall be included for mounting enclosures to a 2-inch pipe.
        3) Provide all mounting hardware for proper installation and servicing of the sensor assembly.
    j. Electrical certification: NRTL certified to UL and CSA standards, and CE approved.

5. Components:
    a. Sensor cable:
        1) Shall be provided with watertight sensor-to-cable connector that prevents cable twisting and eliminates rewiring when replacing the sensor.
        2) Cable length: As required to connect sensor to transmitter plus 10 percent.

2.03 ACCESSORIES

A. Sensor:
    1. Process assemblies:
        a. Manufacturer's flow through cell.

B. Transmitter:
    1. Stainless steel tag:
        a. Marking specified on Instrument Data Sheets.

C. Provide sunshades for outdoor applications directly in sunlight.

2.04 SOURCE QUALITY CONTROL

A. As specified in Section 17050 - Common Work Results for Process Control and Instrumentation Systems.

B. Factory calibrate each instrument with a minimum 3-point calibration or according to Manufacturer's standard at a facility that is traceable to the NIST:
    1. Submit calibration data sheets to the Engineer at least 30 days before shipment of the instruments to the project site.

PART 3 EXECUTION

3.01 EXAMINATION

A. Examine the installation location for the instrument and verify that the instrument will work properly when installed.
    1. Notify the Engineer promptly if any installation condition does not meet the instrument manufacturer's recommendations or specifications.

3.02 PREPARATION (NOT USED)

3.03 INSTALLATION

A. As specified in Section 17050 - Common Work Results for Process Control and Instrumentation Systems.

3.04 FIELD QUALITY CONTROL

A. As specified in Section 17050 - Common Work Results for Process Control and Instrumentation Systems.

B. Provide manufacturer’s services to perform installation inspection, start-up and calibration/verification.

3.05 ADJUSTING

A. As specified in Section 17950 - Testing, Calibration, and Commissioning.

3.06 CLEANING

A. As specified in Section 17050 - Common Work Results for Process Control and Instrumentation Systems.

3.07 DEMONSTRATION AND TRAINING

A. As specified in Section 17050 - Common Work Results for Process Control and Instrumentation Systems.

3.08 PROTECTION

A. As specified in Section 17050 - Common Work Results for Process Control and Instrumentation Systems.

3.09 SCHEDULES

A. The provided information does not necessarily include all required instruments. Provide all instruments identified in the Contract Documents:
   1. Instruments may be indicated on the Drawings, specified in the Specifications or both.

END OF SECTION

A/E:		**pH ANALYZERS**								
						Spec. No.			**Rev.**	
Contractor:		**No**	**By**	**Date**	**Revision**	17501				
Project:						**Contract**			**Date**	
Customer:										
Plant:						**Req.**			**P.O.**	
Location:										
BOM No.:						**By**	**Chk**		**App**	
File:										

G	**1**	**Tag No.** **Element** **Transmitter**	AE/AIT-50-2	AE/AIT-70-2
E	**2**	**Service**	PRE-DISTRIBUTION	DISTRIBUTION
N	**3**	**P&ID**	40N01	70N01
	4	**Type**		
	5	**Body Style**		
	6	**Enclosure**	NEMA 6P	NEMA 6P
E	**7**	**Electrodes**		
L	**8**	**Ambient Conditions**		
E	**9**	**Connection**	Insertion Probe	Insertion Probe
M	**10**	**Sample Flow Required**		
E	**11**	**pH Measuring Range**	2-12 pH	2-12 pH
N	**12**	**Temperature Measuring Range**	30 – 200 degrees F	30 – 200 degrees F
T	**13**	**Manufacturer**	Prominent	Prominent
	14	**Model No.**		
	15	**Length**		
	16	**Other**	Built in Temperature Sensor	Built in Temperature Sensor
C	**17**	**Style**	Manufacturer’s Standard	Manufacturer’s Standard
A	**18**	**Length**		
B	**19**	**Model No.**		
L	**20**	**Pre-Amplifier**		
E	**21**	**Other**		
	22	**Type**	Control Unit and Display	Control Unit and Display
T	**23**	**Enclosure**	NEMA 4X	NEMA 4X
R	**24**	**Mounting**	Remote	Remote
A	**25**			
N	**26**	**Power Requirements**	115 VAC, 60 Hz	115 VAC, 60 Hz
S	**27**	**Resolution**		
M	**28**	**Accuracy**		
I	**29**	**Calibrated Range**		
T	**30**			
T	**31**	**Outputs**	(3) 4-20 mA	(3) 4-20 mA
E	**32**	**Contacts**		
R	**33**	**Manufacturer**	Prominent	Prominent
	34	**Model No.**	DACb	DACb
	35	**Display**		
	36	**Other**	Refer to section 17505 for additional requirements	Refer to section 17505 for additional requirements
	37	**Other**		
	38	**Other**		
O	**38**	**Cleaning**		
P	**39**	**Low Flow Cell**		
T	**38**	**Process Assembly**		
S	**38**	**Other**		
	39			

Notes:
Set transmitter analog outputs for Temperature, PH, and Residual Chlorine

SECTION 17505

ANALYZERS: RESIDUAL CHLORINE

PART 1 GENERAL

1.01 SUMMARY

A. Section includes:
   1. Residual chlorine analyzers.

B. Provide all instruments identified in the Contract Documents.

C. Coordinate provision of residual chlorine analyzer with pH analyzer.

1.02 REFERENCES

A. As specified in Section 17050 - Common Work Results for Process Control and Instrumentation Systems.

1.03 DEFINITIONS

A. As specified in Section 17050 - Common Work Results for Process Control and Instrumentation Systems.

1.04 SUBMITTALS

A. Furnish submittals as specified in Sections 01330 - Submittal Procedures and 17050 - Common Work Results for Process Control and Instrumentation Systems.

B. Provide complete documentation covering the traceability of all calibration instruments.

1.05 QUALITY ASSURANCE

A. As specified in Section 17050 - Common Work Results for Process Control and Instrumentation Systems.

B. Examine the complete set of Contract Documents and verify that the instruments are compatible with the installed conditions including:
   1. Process conditions: Fluids, pressures, temperatures, flows, materials, etc.
   2. Physical conditions:
      a. Installation and mounting requirements.
      b. Location within the process.
      c. Accessories: Verify that all required accessories are provided and are compatible with the process conditions and physical installation.

C. Notify the Engineer if any installation condition does not meet the instrument manufacturer’s recommendations or specifications.

1.06 DELIVERY, STORAGE, AND HANDLING

A. As specified in Section 17050 - Common Work Results for Process Control and Instrumentation Systems.

1.07 PROJECT OR SITE CONDITIONS

A. Project environmental conditions as specified in Section 17050 - Common Work Results for Process Control and Instrumentation Systems.
   1. Provide instruments suitable for the installed site conditions including, but not limited to, material compatibility, site altitude, site seismic conditions, humidity, and process and ambient temperatures.

1.08 WARRANTY

A. As specified in Section 17050 - Common Work Results for Process Control and Instrumentation Systems.

1.09 MAINTENANCE

A. Furnish all parts, materials, fluids, etc. necessary for operation, maintenance, and calibration purposes throughout the warranty period. Deliver all of these supplies before project substantial completion.

PART 2 PRODUCTS

2.01 MANUFACTURERS

A. Amperometric residual analyzers:
   1. One of the following or equal:
      a. Prominent:
         1) Chlorine Sensor Model CLE3-mA.
         2) pH Sensor Model PHEP 112SE.
         3) Transmitter model DACb.

2.02 MANUFACTURED UNITS

A. Amperometric residual analyzers:
   1. General:
      a. Residual chlorine analyzer utilizing amperometric technology for continuous monitoring of the free chlorine residual in solution.
   2. Performance requirements:
      a. Continuous on-line analysis for free or total chlorine residual.
      b. Minimum detection: 0.040 milligrams per liters.
      c. Accuracy:
         1) Within 5 percent of reading or within 0.035 milligrams per liters.
      d. Range:
         1) 0 to 5 milligrams per liters free or total residual.
      e. Repeatability:
         1) Within 5 percent or 0.005 milligrams per liters.
   3. Components:
      a. Flow through sensors, including flow rate control, multiple probes.

4. Transmitter:
    a. Provide a single transmitter for both pH and residual chlorine. Refer to specification 17501 - Analyzers: pH for transmitter requirements.

2.03 ACCESSORIES

A. Provide sun shades for outdoor installations directly in sunlight.

2.04 SOURCE QUALITY CONTROL

A. As specified in Section 17050 - Common Work Results for Process Control and Instrumentation Systems.

B. Factory calibrate each instrument with a minimum 3-point calibration or according to Manufacturer’s standard at a facility that is traceable to the NIST.
    1. Submit calibration data sheets to the Engineer at least 30 days before shipment of the instruments to the project site.

PART 3 EXECUTION

3.01 EXAMINATION

A. Examine the installation location for the instrument and verify that the instrument will work properly when installed.
    1. Notify the Engineer promptly if any installation condition does not meet the instrument manufacturer’s recommendations or specifications.

3.02 PREPARATION (NOT USED)

3.03 INSTALLATION

A. As specified in Section 17050 - Common Work Results for Process Control and Instrumentation Systems.

3.04 FIELD QUALITY CONTROL

A. As specified in Section 17050 - Common Work Results for Process Control and Instrumentation Systems.

B. Provide manufacturer’s services to perform installation inspection, start-up and calibration/verification.

3.05 ADJUSTING

A. As specified in Section 17950 - Testing, Calibration, and Commissioning.

3.06 CLEANING

A. As specified in Section 17050 - Common Work Results for Process Control and Instrumentation Systems.

3.07 DEMONSTRATION AND TRAINING

A. As specified in Section 17050 - Common Work Results for Process Control and Instrumentation Systems.

3.08 PROTECTION

A. As specified in Section 17050 - Common Work Results for Process Control and Instrumentation Systems.

3.09 SCHEDULES

A. The provided information does not necessarily include all required instruments. Provide all instruments identified in the Contract Documents:
   1. Instruments may be indicated on the Drawings, specified in the Specifications, or both.

END OF SECTION

Analyzer Transmitter

PROJECT INFORMATION

PLANT GIBSON OAKS WPF
PROJECT 9621C10

CUSTOMER POLK COUNTY UTILITIES
LOCATION POLK COUNTY, FL

GENERAL NOTE: FIELDS SHOWN WITH THE [*] SYMBOL ARE NOT SHOWN ON THE DATASHEET BUT MAY BE REQUIRED BY THE CONTRACT DOCUMENTS. THE CONTRACTOR SHALL SUBMIT COMPLETE ISA DATASHEETS FOR EACH INSTRUMENT PER ALL SPECIFIED REQUIREMENTS.

GENERAL

SPECIFICATION NUMBER 17505
DRAWING NUMBER 40N001
SERVICE CHLORINE RESIDUAL
POWER LOCATION PCM-1-1

MEASURING PRINCIPLE AMPEROMETRIC
PLC PLC-1-1
TYPICAL DETAILS [*]

FLUID

FLUID FINISHED WATER
MEASUREMENT RANGE 0-5 MG/L
SAMPLE FLOW [*]
SAMPLE pH 2-12 PH

PRESSURE [*]
TEMPERATURE 0-120 DEG F DEG F
SAMPLE TEMPERATURE 40 - 80 DEG F

ELEMENT

ELEMENT TAG NO. AE-50-1
ENCLOSURE CLASS NEMA 4X
CLEANING APPARATUS NO

PROCESS CONNECTION SAMPLE LINE
HAZARDOUS APPROVALS N/A
ELEMENT MOUNTING KIT FLOW ASSEMBLY

TRANSMITTER

TRANSMITTER TAG NO. AIT-50-1
ENCLOSURE CLASS NEMA 4X
TRANS. MOUNTING REMOTE
POWER 120VAC-1P
SURGE PROTECTION YES
AIR CLEANING SYSTEM NO

SIGNAL OUTPUT AI
OUTPUT 4-20 MA
TRANS. HAZ APPROVALS N/A
RELAY OPTIONS YES
AMBIENT TEMPERATURE [*]

NOTES

CONFIGURE TRANSMITTER ANALOG OUTPUTS FOR TEMPERATURE, PH, AND RESIDUAL CHLORINE.

Analyzer Transmitter

PROJECT INFORMATION

PLANT GIBSON OAKS WPF
PROJECT 9621C10
CUSTOMER POLK COUNTY UTILITIES
LOCATION POLK COUNTY, FL

GENERAL NOTE: FIELDS SHOWN WITH THE [*] SYMBOL ARE NOT SHOWN ON THE DATASHEET BUT MAY BE REQUIRED BY THE CONTRACT DOCUMENTS. THE CONTRACTOR SHALL SUBMIT COMPLETE ISA DATASHEETS FOR EACH INSTRUMENT PER ALL SPECIFIED REQUIREMENTS.

GENERAL

SPECIFICATION NUMBER 17505
DRAWING NUMBER 70N001
SERVICE CHLORINE RESIDUAL
POWER LOCATION PCM-1-1
MEASURING PRINCIPLE AMPEROMETRIC
PLC PLC-1-1
TYPICAL DETAILS [*]

FLUID

FLUID FINISHED WATER
MEASUREMENT RANGE 0-5 MG/L
SAMPLE FLOW [*]
SAMPLE pH 2-12 PH
PRESSURE [*]
TEMPERATURE 0-120 DEG F DEG F
SAMPLE TEMPERATURE 40 - 80 DEG F

ELEMENT

ELEMENT TAG NO. AE-70-1
ENCLOSURE CLASS NEMA 4X
CLEANING APPARATUS NO
PROCESS CONNECTION SAMPLE LINE
HAZARDOUS APPROVALS N/A
ELEMENT MOUNTING KIT FLOW ASSEMBLY

TRANSMITTER

TRANSMITTER TAG NO. AIT-70-1
ENCLOSURE CLASS NEMA 4X
TRANS. MOUNTING REMOTE
POWER 120VAC-1P
SURGE PROTECTION YES
AIR CLEANING SYSTEM NO
SIGNAL OUTPUT AI
OUTPUT 4-20 MA
TRANS. HAZ APPROVALS N/A
RELAY OPTIONS YES
AMBIENT TEMPERATURE [*]

NOTES

CONFIGURE TRANSMITTER ANALOG OUTPUTS FOR TEMPERATURE, PH, AND RESIDUAL CHLORINE.

SECTION 17604

TEMPERATURE MEASUREMENT: RTD

PART 1 GENERAL

1.01 SUMMARY

A. Section includes:
   1. RTD temperature instruments.

B. Provide all instruments identified in the Contract Documents.

1.02 REFERENCES

A. As specified in Section 17050 - Common Work Results for Process Control and Instrumentation Systems.

1.03 DEFINITIONS

A. As specified in Section 17050 - Common Work Results for Process Control and Instrumentation Systems.

B. Specific definitions:
   1. RTD - Resistance temperature detector.

1.04 SUBMITTALS

A. Furnish submittals as specified in Sections 01330 - Submittal Procedures and 17050 - Common Work Results for Process Control and Instrumentation Systems.

B. Provide complete documentation covering the traceability of all calibration instruments.

1.05 QUALITY ASSURANCE

A. As specified in Section 17050 - Common Work Results for Process Control and Instrumentation Systems.

B. Examine the complete set of Contract Documents and verify that the instruments are compatible with the installed conditions including:
   1. Process conditions: Fluids, pressures, temperatures, flows, materials, etc.
   2. Physical conditions:
      a. Installation and mounting requirements.
      b. Location within the process.
      c. Accessories: Verify that all required accessories are provided and are compatible with the process conditions and physical installation.

C. Notify the Engineer if any installation condition does not meet the instrument manufacturer’s recommendations or specifications.

D. Provide instruments manufactured at facilities certified to the quality standards of ISO 9001.

1.06 DELIVERY, STORAGE, AND HANDLING

A. As specified in Section 17050 - Common Work Results for Process Control and Instrumentation Systems.

1.07 PROJECT OR SITE CONDITIONS

A. As specified in Section 17050 - Common Work Results for Process Control and Instrumentation Systems.

1.08 WARRANTY

A. As specified in Section 17050 - Common Work Results for Process Control and Instrumentation Systems.

1.09 MAINTENANCE

A. Furnish all parts, materials, fluids, etc. necessary for operation, maintenance, and calibration purposes throughout the warranty period. Deliver all of these supplies before project substantial completion.

PART 2 PRODUCTS

2.01 MANUFACTURERS

A. One of the following or equal:
  1. Electrical/Admin Room:
    a. Kele, ST-T91 Series.
    b. Greystone, TE500A Series.
    c. Siemens, 1000 Series.

2.02 MANUFACTURED UNITS

A. Provide all necessary hardware for transmitter mounting.

B. Electrical/Admin Room:
  1. General:
    a. Wall-mounted temperature measuring instrument shall include an RTD temperature element and transmitter.
  2. Performance requirements:
    a. Transmitter enclosure rating:
      1) NEMA Type 1.
    b. Temperature range:
      1) 0 to 50 degrees Celsius.
    c. Accuracy:
      1) Within 0.3 degrees Celsius.
    d. Element:
      1) Platinum RTD.

        - e. Power:
            - 1) 24VDC, loop powered.
        - f. Output:
    - 3. 4 to 20 milliamperes.

2.03 ACCESSORIES

A. Provide sunshades for outdoor installations.

2.04 SOURCE QUALITY CONTROL

A. As specified in Section 17050 - Common Work Results for Process Control and Instrumentation Systems.

B. Factory calibrate each instrument with a minimum 3-point calibration or according to Manufacturer’s standard at a facility that is traceable to the NIST.
  1. Submit calibration data sheets to the Engineer at least 30 days before shipment of the instruments to the project site.

PART 3 EXECUTION

3.01 EXAMINATION

A. Examine the installation location for the instrument and verify that the instrument will work properly when installed.
  1. Notify the Engineer promptly if any installation condition does not meet the instrument manufacturer’s recommendations or specifications.

3.02 PREPARATION (NOT USED)

3.03 INSTALLATION

A. As specified in Section 17050 - Common Work Results for Process Control and Instrumentation Systems.

B. Coordinate the installation with all trades to ensure that the mechanical system has all necessary appurtenances including weld-o-lets, valves, etc. for proper installation of instruments.

C. Apply thermally conductive silicone grease to the sensor tip before insertion in thermowell.

3.04 FIELD QUALITY CONTROL

A. As specified in Section 17050 - Common Work Results for Process Control and Instrumentation Systems.

3.05 ADJUSTING

A. As specified in Section 17950 - Testing, Calibration, and Commissioning.

3.06 CLEANING

A. As specified in Section 17050 - Common Work Results for Process Control and Instrumentation Systems.

3.07 DEMONSTRATION AND TRAINING

A. As specified in Section 17050 - Common Work Results for Process Control and Instrumentation Systems.

3.08 PROTECTION

A. As specified in Section 17050 - Common Work Results for Process Control and Instrumentation Systems.

3.09 SCHEDULES

A. The provided information does not necessarily include all required instruments. Provide all instruments identified in the Contract Documents:
   1. Instruments may be indicated on the Drawings, specified in the Specifications, or both.

END OF SECTION

Resistance Temperature Device

PROJECT INFORMATION

PLANT	GIBSON OAKS WPF	**CUSTOMER**	POLK COUNTY UTILITIES
PROJECT	9621C10	**LOCATION**	POLK COUNTY, FL

GENERAL NOTE: FIELDS SHOWN WITH THE [*] SYMBOL ARE NOT SHOWN ON THE DATASHEET BUT MAY BE REQUIRED BY THE CONTRACT DOCUMENTS. THE CONTRACTOR SHALL SUBMIT COMPLETE ISA DATASHEETS FOR EACH INSTRUMENT PER ALL SPECIFIED REQUIREMENTS.

GENERAL

SPECIFICATION NUMBER	17604	**MEASURING PRINCIPLE**	RESISTANCE TEMPERATURE DETECTOR
DRAWING NUMBER	90N002	**PLC**	PLC-1-1
SERVICE	TEMPERATURE TRANSMITTER	**TYPICAL DETAILS**	[*]

CONNECTION

PROCESS CONNECTION	N/A	**MOUNTING**	SURFACE

FLUID

FLUID	AIR	**TEMPERATURE RANGE**	50-90 DEG F
PROCESS TEMPERATURE	[*]	**AMBIENT TEMPERATURE**	[*]

ELEMENT

ELEMENT TAG NO.	TE-1-1	**NUMBER OF LEAD WIRES**	2-WIRE
ELEMENT TYPE	SINGLE ELEMENT	**ELEM. TERMINATION STYLE**	DIN FLYING LEADS
SHEATH MATERIAL	N/A		

THERMOWELL

STEM STYLE	MFR. STD.	**RTD MOUNTING**	N/A
THERMOWELL MATERIAL	N/A	**INSERTION LENGTH**	[*]

TRANSMITTER

TRANSMITTER TAG NO.	TIT-1-1	**AMBIENT TEMPERATURE**	[*]
ENCLOSURE CLASS	NEMA 1	**SIGNAL OUTPUT**	AI
TRANS. MOUNTING	INTEGRAL	**OUTPUT**	4-20 MA
HAZARDOUS APPROVALS	N/A	**RELAY OPTIONS**	NO
SURGE PROTECTION	NO		

NOTES

[*]

Carollo Engineers...Working Wonders With Water™

Resistance Temperature Device

RESERVOIR®

PROJECT INFORMATION

PLANT GIBSON OAKS WPF

CUSTOMER POLK COUNTY UTILITIES

PROJECT 9621C10

LOCATION POLK COUNTY, FL

GENERAL NOTE: FIELDS SHOWN WITH THE [*] SYMBOL ARE NOT SHOWN ON THE DATASHEET BUT MAY BE REQUIRED BY THE CONTRACT DOCUMENTS. THE CONTRACTOR SHALL SUBMIT COMPLETE ISA DATASHEETS FOR EACH INSTRUMENT PER ALL SPECIFIED REQUIREMENTS.

GENERAL

SPECIFICATION NUMBER 17604

MEASURING PRINCIPLE RESISTANCE TEMPERATURE DETECTOR

DRAWING NUMBER 92N002

PLC PLC-2-1

SERVICE TEMPERATURE TRANSMITTER

TYPICAL DETAILS [*]

CONNECTION

PROCESS CONNECTION N/A

MOUNTING SURFACE

FLUID

FLUID AIR

TEMPERATURE RANGE 50-90 DEG F

PROCESS TEMPERATURE [*]

AMBIENT TEMPERATURE [*]

ELEMENT

ELEMENT TAG NO. TE-2-1

NUMBER OF LEAD WIRES 2-WIRE

ELEMENT TYPE SINGLE ELEMENT

ELEM. TERMINATION STYLE DIN FLYING LEADS

SHEATH MATERIAL N/A

THERMOWELL

STEM STYLE N/A

RTD MOUNTING N/A

THERMOWELL MATERIAL N/A

INSERTION LENGTH [*]

TRANSMITTER

TRANSMITTER TAG NO. TIT-2-1

AMBIENT TEMPERATURE [*]

ENCLOSURE CLASS NEMA 1

SIGNAL OUTPUT AI

TRANS. MOUNTING INTEGRAL

OUTPUT 4-20 MA

HAZARDOUS APPROVALS N/A

RELAY OPTIONS NO

SURGE PROTECTION NO

NOTES

[*]

Resistance Temperature Device

PROJECT INFORMATION

PLANT GIBSON OAKS WPF
CUSTOMER POLK COUNTY UTILITIES
PROJECT 9621C10
LOCATION POLK COUNTY, FL

GENERAL NOTE: FIELDS SHOWN WITH THE [*] SYMBOL ARE NOT SHOWN ON THE DATASHEET BUT MAY BE REQUIRED BY THE CONTRACT DOCUMENTS. THE CONTRACTOR SHALL SUBMIT COMPLETE ISA DATASHEETS FOR EACH INSTRUMENT PER ALL SPECIFIED REQUIREMENTS.

GENERAL

SPECIFICATION NUMBER 17604
MEASURING PRINCIPLE RESISTANCE TEMPERATURE DETECTOR
DRAWING NUMBER 91N002
PLC PLC-3-1
SERVICE TEMPERATURE TRANSMITTER
TYPICAL DETAILS [*]

CONNECTION

PROCESS CONNECTION N/A
MOUNTING SURFACE

FLUID

FLUID AIR
TEMPERATURE RANGE 50-90 DEG F
PROCESS TEMPERATURE [*]
AMBIENT TEMPERATURE [*]

ELEMENT

ELEMENT TAG NO. TE-3-1
NUMBER OF LEAD WIRES 2-WIRE
ELEMENT TYPE SINGLE ELEMENT
ELEM. TERMINATION STYLE DIN FLYING LEADS
SHEATH MATERIAL 316 SST

THERMOWELL

STEM STYLE N/A
RTD MOUNTING N/A
THERMOWELL MATERIAL N/A
INSERTION LENGTH [*]

TRANSMITTER

TRANSMITTER TAG NO. TIT-3-1
AMBIENT TEMPERATURE [*]
ENCLOSURE CLASS NEMA 1
SIGNAL OUTPUT AI
TRANS. MOUNTING INTEGRAL
OUTPUT 4-20 MA
HAZARDOUS APPROVALS N/A
RELAY OPTIONS NO
SURGE PROTECTION NO

NOTES

[*]

SECTION 17710

CONTROL SYSTEMS: PANELS, ENCLOSURES, AND PANEL COMPONENTS

PART 1 GENERAL

1.01 SUMMARY

A. Section includes:
   1. Design, fabrication and assembly of all instrumentation enclosures, control panels and components provided under this contract, including but not limited to:
      a. Custom built instrumentation and control panels, including all enclosures for hand stations controllers, low voltage power distribution and marshalling panels.
      b. Control panels furnished as part of equipment systems specified in other Divisions, such as vendor control panels (VCPs) and chemical feed panels.
      c. Control components.
      d. Control panel installation.

B. Provide all control panels identified in Contract Documents.

1.02 REFERENCES

A. As specified in Section 17050 - Common Work Results for Process Control and Instrumentation Systems.

B. Institute of Electrical and Electronics Engineers (IEEE):
   1. C62.41.1 - Guide on the Surge Environment in Low-Voltage (1000 V and less) AC Power Circuits.

C. Underwriters Laboratories Inc. (UL):
   1. 508 - Standard for Industrial Control Equipment.
   2. 508A - Standard for Industrial Control Panel.
   3. 1283 - Standard for Electromagnetic Interference Filters.
   4. 1449 - Standard for Surge Protective Devices.

1.03 DEFINITIONS

A. As specified in Section 17050 - Common Work Results for Process Control and Instrumentation Systems.

B. Specific definitions:
   1. The term “panel” in this Section is interchangeable with the term “enclosure.”

1.04 SYSTEM DESCRIPTION

A. Panel dimensions:
   1. Minimum dimensions are scalable from or as indicated on the Drawings and are based upon manufacturer’s non-certified information. It is the responsibility of the Contractor or manufacturer to design and size all panels:
      a. Size panels to provide space for all equipment, wiring, terminations, and other items in the panel, including space for future build out.
      b. Panel sizes that substantially deviate (within 3 inches in any dimension) from the sizes indicated on the Drawings must be approved by the Engineer.
      c. Maximum panel depth: 30 inches, unless otherwise indicated.

B. Structural design:
   1. Completed and installed panel work shall safely withstand requirements at the project site as specified in Section 16050 - Common Work Results for Electrical. Enclosures and internal equipment shall be braced to prevent damage from specified forces.

1.05 SUBMITTALS

A. Provide submittals as specified in Section 01330 - Submittal Procedures and Section 17050 - Common Work Results for Process Control and Instrumentation Systems.

B. Provide a control panel hardware submittal for each control panel and enclosure being provided on this project, including but not limited to:
   1. Product data:
      a. Enclosure construction details and NEMA type.
      b. Manufacturer's literature and specification data sheets for each type of equipment to be installed within or on the panel or enclosure.
   2. Shop drawings:
      a. Scaled, detailed exterior panel (front and side views) and interior panel layout showing equipment arrangement and dimensional information:
         1) Provide draft for review and approval by Engineer. The Engineer has the authority to substantially alter initial panel layouts.
      b. Complete nameplate engraving schedule.
      c. Structural details of fabricated panels.
   3. Calculations:
      a. Cooling calculations, including but not limited to:
         1) Highest expected ambient temperature for the enclosure's location.
         2) Internal heat load.
         3) Exposure to direct sunlight.
         4) Dimensions of the enclosure in inches.
         5) Maximum allowable temperature inside the enclosure, based on the lowest operating temperature limit of the installed components.

1.06 QUALITY ASSURANCE

A. As specified in Section 17050 - Common Work Results for Process Control and Instrumentation Systems.

B. Assemble panels, enclosures, and rack systems along with all internal and external devices, wiring, equipment, and materials in a facility that is recognized by UL to assemble and certify UL-labeled control panels:
   1. Provide all components and equipment with UL 508 listing.
   2. All control panels shall be UL 508A labeled, unless the equipment in the panel and the design in the contract documents cannot be reasonably modified to meet the requirements for UL 508A labeling:
   3. Provide fuses for all equipment that is not UL or UR listed.

1.07 DELIVERY, STORAGE, AND HANDLING

A. Project environmental conditions as specified in Section 17050 - Common Work Results for Process Control and Instrumentation Systems.
   1. Provide instruments suitable for the installed site conditions including, but not limited to, material compatibility, site altitude humidity, and process and ambient temperatures.

1.08 PROJECT OR SITE CONDITIONS

A. As specified in Section 17050 - Common Work Results for Process Control and Instrumentation.

1.09 SEQUENCING (NOT USED)

1.10 SCHEDULING (NOT USED)

1.11 WARRANTY

A. As specified in Section 17050 - Common Work Results for Process Control and Instrumentation Systems.

1.12 SYSTEM START-UP (NOT USED)

1.13 OWNER’S INSTRUCTIONS (NOT USED)

1.14 COMMISSIONING (NOT USED)

1.15 MAINTENANCE (NOT USED)

PART 2 PRODUCTS

2.01 MANUFACTURERS

A. As listed below in the individual component paragraphs.

B. Provide instruments and other components performing similar functions of the same type, model, or class, and from 1 manufacturer.

2.02 EXISTING PRODUCTS (NOT USED)

2.03 MATERIALS

A. Construct and finish enclosures using materials capable of withstanding the mechanical, electrical, and thermal stresses, as well as the effects of humidity and corrosion that are likely to be encountered in normal service:
   1. Enclosures shall have the following properties:
      a. NEMA Type 1: Steel.
      b. NEMA Type 4: Steel with gasketed door, raintight.
      c. NEMA Type 4X: Type 316 stainless steel (unless Type 304 is indicated on the Drawings).
      d. NEMA Type 4X: Polycarbonate or fiberglass reinforced polyester (FRP) in corrosive areas where stainless steel is incompatible.
      e. NEMA Type 12: Steel with gasketed door, dusttight.
      f. NEMA Type 7: Cast aluminum.

B. Bolting material:
   1. Commercial quality 1/2-inch diameter, stainless steel hex-head Grade 5 bolts, nuts, and washers, with unified coarse (UNC) threads.
   2. Carriage bolts for attaching end plates.
   3. All other bolted joints shall have S.A.E. standard lock washers.

2.04 MANUFACTURED UNITS

A. Panels/enclosures:
   1. Manufacturers: One of the following or equal:
      a. nVent/Pentair (formerly Hoffman Engineering).
      b. Rittal.
      c. Saginaw Control & Engineering.
   2. Panel assembly:
      a. General guidelines for panel fabrication include:
         1) Continuous welds ground smooth.
         2) Exposed surfaces free of burrs and sharp edges.
         3) Base formed of heavy channel iron, either galvanized or powder coated, minimum 1/2-inch holes at 12-inch spacing to accommodate anchoring of freestanding enclosures to floor.
      b. Construct enclosure and mounting panel using stretcher-level quality sheet metal having minimum thickness not less than the following sizes (U.S. Standard Gauge):

Enclosure Height (inches)	**Minimum Enclosure Steel Thickness (gauge)**	**Minimum Back Mounting Panel Thickness (gauge)**
Wall-mounted up to 48	14	14
Up to 57	12	12
57 - 69	12	10
69 - 82	12, except 10 on back	10
82 or more	10	10

    - c. Construct supporting frame structure with angled, channeled, or folded rigid section of sheet metal, rigidly attached to and having essentially the same outer dimensions as the enclosure surface and having sufficient torsional rigidity to resist the bending moments applied via the enclosure surface when it is deflected.
    - d. Provide stiffeners for back mounting panels in enclosures larger than 4 feet. In addition, secure the panels in place by collar studs welded to the enclosure.
    - e. Door construction:
        - 1) Turned-back edges suitably braced and supported to maintain alignment and rigidity without sagging.
        - 2) Sufficient width to permit door opening without interference with rear projection of flush-mounted instruments.
        - 3) Heavy-gauge piano-type continuous stainless steel hinges.
        - 4) For NEMA Type 12, Type 4, and Type 4X, provide oil-resistant neoprene sealing gasket and adhesive to seal cover to enclosure.
        - 5) Gasket installed to seal against roll lip on the enclosure opening.
    - f. Latches:
        - 1) For panels, provide each door with a 3-point latching mechanism and locking handle with rollers on the ends of the latch rods. Latch rods shall be connected to a common door handle, hold doors securely, and form a compressed seal between door and gasket, at the top, side, and bottom.
        - 2) Include provision for locking handle with a padlock.
    - g. Panel cut-outs:
        - 1) Cut, punch, or drill cutouts for instruments, devices, and windows. Smoothly finish with rounded edges.
        - 2) Allow a minimum of 3-inch envelope around all displays, controllers, and monitors.
        - 3) Reinforce around cut-outs with steel angles or flat bars for the following:
            - a) Large panel cutouts; for example, openings for local operator interfaces.
            - b) Pilot device groupings, where the removed metal exceeds 50 percent of the available metal.
3. In addition to the requirements specified above, the following requirements for NEMA Type 4X powder coated stainless steel enclosures apply:
    - a. Minimum 14-gauge, Type 304 stainless steel.
    - b. Captive stainless steel cover screws threaded into sealed wells.
    - c. Inside finish: White polyester powder coating.
    - d. Specifically designed for use with flange-mounted disconnect handles where required or as indicated on the Drawings.
4. Outdoor panels. Supplementary requirements for panels located outdoors are as follows:
    - a. All enclosures located outdoors shall be explicitly designed and rated for outdoor service by the manufacturer.
    - b. Door hardware: Stainless steel.
    - c. Provide factory installed rain canopy and sun shield for all enclosures with operator interface panels.
    - d. Bases: Heavy channel, gasketed stainless steel bases, flanges up, for anchoring to pad.

B. Arrangement of components:
  1. Arrange panel internal components for external conduit and piping to enter into panel either from above or below.
  2. Arrange panel instruments and control devices in a logical configuration, associating pushbutton and selector switches with related readout devices, or as indicated on the Drawings.
  3. Mount internal control components on an internal back panel. Devices may be mounted on the side panel only by special permission from the Engineer.
  4. All control-panel-mounted operator interface devices shall be mounted between 3 feet and 5 feet above finished floor.

C. Overcurrent protection:
  1. Main overcurrent device:
    a. Where the electrical power supply voltage to the control panel is more than 120 VAC, provide the panel with a flange-mounted disconnect handle operating a molded-case circuit breaker and provide a control power transformer for 120-VAC circuits:
      1) Door-mounted disconnect handles are not acceptable.
      2) Mechanically interlock the disconnect switch with the control enclosure doors so that no door can be opened unless the power is disconnected, and the disconnect switch cannot be closed until all doors are closed.
      3) Provide means to defeat the interlock.
      4) Lockable in the off position.
    b. Control panels supplied with 120 VAC:
      1) Provide an internal breaker with the line side terminals covered by a barrier.
      2) Provide a nameplate prominently positioned on the control panel identifying the location of the power source and a warning statement requiring the source to be disconnected before opening the door to the enclosure.
  2. Provide circuit breakers as specified in Section 16412 - Low Voltage Molded Case Circuit Breakers.
  3. Selection and ratings of protective devices:
    a. Interrupting ratings: Not less than the system maximum available fault current at the point of application.
    b. Voltage rating: Not less than the voltage of the application.
    c. Select current rating and trip characteristics to be suitable for:
      1) Maximum normal operating current.
      2) Inrush characteristics.
      3) Coordination of the protective devices to each other and to the source breaker feeding the panel.
  4. Provide a separate protective device for each powered electrical device:
    a. An individual circuit breaker for each 120-VAC instrument installed within its respective control panel and clearly identified for function.
    b. An individual fuse for each PLC discrete output. Provide with individual blown fuse indication external of the I/O card:
      1) Size external fuse to open before any I/O-card-mounted fuses.
      2) Individual discrete inputs shall use a 0.5-ampere fuse.
    c. Control loops can use individual 5-ampere fuse for the loop.
    d. Install protective devices on the back mounting panel and identify by a service nameplate in accordance with the wiring diagrams.

5. Fuses for 4 to 20 milliamperes signals:
    a. Provide durable, readily visible label for each fuse, clearly indicating the correct type, size, and ratings of replacement fuse:
        1) Label shall not cover or interfere with equipment manufacturer's instructions.
    b. An individual 1/2-ampere fuse for each 4 to 20 milliamperes analog loop powered from the control panel.
    c. Provide fuses rated for the voltage and available short-circuit current at which they are applied.
    d. Manufacturers: One of the following or equal:
        1) Ferraz Shawmut.
        2) Littelfuse.
        3) Bussmann.
6. Fuse holders:
    a. Modular type:
        1) DIN rail mounting on 35-millimeter rail.
        2) Touch-safe design: All connection terminals to be protected against accidental touch.
        3) Incorporates blown-fuse indicator.
        4) Plug-in style fuse terminals and fuse plugs are not acceptable.
    b. Provide nameplate identifying each fuse:
        1) As specified in Section 16075 - Identification for Electrical Systems.
    c. Manufacturers: One of the following or equal:
        1) Phoenix Contact.
        2) Allen-Bradley, 1492-FB Series B.
7. Control circuit breakers:
    a. DIN rail mounting on 35-millimeter rail.
    b. Manual OPEN-CLOSE toggle switch.
    c. Rated for 250 VAC.
    d. Interrupting rating: 10 kiloampere (kA) or available fault current at the line terminal, whichever is higher.
    e. Current ratings: As indicated on the Drawings or as required for the application.
    f. Provide nameplate identifying each circuit breaker:
        1) As specified in Section 16075 - Identification for Electrical Systems.
    g. Manufacturers: One of the following or equal:
        1) Phoenix Contact.
        2) Allen-Bradley.
        3) Square D.

D. Conductors and cables:
1. Power and control wiring:
    a. Materials: Stranded, soft annealed copper.
    b. Insulation: 600 volts type MTW.
    c. Minimum sizes:
        1) Primary power distribution: 12 AWG.
        2) Secondary power distribution: 14 AWG.
        3) Control: 16 AWG.
    d. Color:
        1) AC power (line and load): Black.
        2) AC power (neutral): White.
        3) AC control: Red.

        4) AC control: Orange for foreign voltages.
        5) DC power and control (ungrounded): Blue.
        6) DC power and control (grounded): White with Blue stripe.
        7) Ground: Green.
  2. Signal cables:
    a. Materials: Stranded, soft annealed copper.
    b. Insulation: 600 volts, PVC outer jacket.
    c. Minimum size: 18 AWG paired triad.
    d. Overall aluminum shield (tape).
    e. Copper drain wire.
    f. Color:
        1) 2-Conductor:
            a) Positive (+): Black.
            b) Negative (-): White and red.
        2) 3-Conductor:
            a) Positive (+): Black.
            b) Negative (-): Red.
            c) Signal: White.
    g. Insulate the foil shielding and exposed drain wire for each signal cable with heat-shrink tubing.

E. Conductor identification:
  1. Identify each conductor and cable with unique wire numbers as specified in Section 16075 - Identification for Electrical Systems.
  2. Readily identified without twisting the conductor.

F. General wiring requirements:
  1. Wiring methods: Wiring methods and materials for panels shall be in accordance with the NEC requirements for General Purpose (no open wiring) unless otherwise specified.
  2. Install all components in accordance with the manufacturer's instructions included in the listing and labeling.
  3. Provide a nameplate on the cover of the control panel identifying all sources of power supply and foreign voltages within the control panel.
  4. Provide transformers, protective devices, and power supplies required to convert the supply voltage to the needed utilization voltage.
  5. Provide power surge protection for all control panels.
  6. Provide signal surge protection within control panels for each analog I/O, discrete I/O, and data line (Copper Ethernet, Coax, Fieldbus signals) that originates from outdoor devices.
  7. Provide non-metallic ducts for routing and organization of conductors and cables:
    a. Provide wiring separation plan.
    b. Size ducts for ultimate build-out of the panel, or for 20-percent spare, whichever is greater.
    c. Provide separate ducts for signal and low-voltage wiring from power and 120-VAC control wiring:
        1) 120 VAC: Grey colored ducts.
        2) 24 VDC: White colored ducts.
  8. Cables shall be fastened with cable-mounting clamps or with cable ties supported by any of the following methods:
    a. Screw-on cable tie mounts.

    b. Hammer-on cable-tie mounting clips.
    c. Fingers of the nonmetallic duct.
  9. Wire ties:
    a. No wire ties inside wire duct.
    b. Use Panduit Cable tie installation tool, with tension control/cutoff.
    c. Verify cut ends are cut flush filed smooth after installed.
  10. Provide supports at the ends of cables to prevent mechanical stresses at the termination of conductors.
  11. Support panel conductors where necessary to keep them in place.
  12. Wiring to rear terminals on panel-mount instruments shall be run in nonmetallic duct secured to horizontal brackets run adjacent to the instruments.
  13. Conductors and cables shall be run from terminal to terminal without splice or joints. Exceptions:
    a. Factory-applied connectors molded onto cables shall be permitted. Such connectors shall not be considered as splices or joints.

G. Provide power circuits for all Contractor and Vendor-furnished PLC cabinets in accordance with the PLC and Instrument Power wiring diagrams Indicated on the Drawings or as specified.

2.05 EQUIPMENT (NOT USED)

2.06 COMPONENTS

A. Thermal management:
  1. Provide heating, cooling, and dehumidifying devices in order to maintain all instrumentation and control devices to within a range as specified in Section 17050 - Common Work Results for Process Control and Instrumentation.
  2. Heating:
    a. Provide all panels located in areas that are not climate controlled with thermostatically controlled strip heaters, except where all of the following conditions apply:
      1) The panel is not supplied with 120 VAC power.
      2) There are no electronics or moisture-sensitive devices in the enclosure.
      3) The panel is smaller than 38 inches high.
  3. Enclosure temperature switch:
    a. Provide wall-mounted bimetallic switch transmitter (to measure internal cabinet temperature in all enclosures) containing electrical components such as PLCs, RTUs, RIO, and VFDs.
    b. Sensor and electronic enclosure.
    c. Accuracy: Within 2 degrees Fahrenheit.
    d. Manufacturers: One of the following or equal:
      1) Hoffman ATEMNC.
      2) Pfannenberg FLZ.
  4. Status relays and discrete inputs for switches, power supplies, and fieldbus devices (if applicable):
    a. Provide as indicated on the Drawings or as specified.

B. Panel meters:
  1. Pointer type:

    - a. Suitable for panel mounting.
    - b. Minimum scale length: 3 inches.
    - c. Calibrated in engineering units.
    - d. Accuracy: Within 2 percent of span.
    - e. NEMA Type 4/IP65 sealed front metal bezel.
    - f. Manufacturers: One of the following or equal:
        - 1) Yokogawa.
        - 2) Red Lion.
- 2. Digital process indicators:
    - a. General:
        - 1) Integral provisions for scaling.
        - 2) Scale to process engineering units.
        - 3) Switch-programmable decimal points.
        - 4) NEMA Type 4/IP65 sealed front bezel.
    - b. Current and voltage indicators:
        - 1) 3-1/2-digit minimum.
        - 2) Minimum character height: 0.5 inches.
        - 3) Accuracy:
            - a) AC/DC volts: Within 0.1 percent of reading plus 2 digits.
            - b) DC current: 4 to 20 milliamperes; within 0.1 percent of reading plus 1 digit.
            - c) DC voltage: 0 to 10 volts; within 0.1 percent of reading plus 1 digit.
    - c. Operating voltage: 120 VAC.
    - d. Operating temperature: 0 to 60 degrees Celsius.
        - 1) Manufacturers: One of the following or equal:
            - a) Red Lion.
            - b) Action Instruments, Visipak.
- 3. Digital bar graph meter:
    - a. Self-contained instruments that display process signals directly in engineering units, both in decimal format and as a bar graph display.
    - b. Suitable for panel mounting.
    - c. LED display:
        - 1) Not less than 3 decimal digits.
        - 2) Not less than a 101-segment LED bar graph.
    - d. Input signal:
        - 1) All conventional current loops and voltage control signals.
    - e. Minimum sample rate of once per second.
    - f. Provisions for field-adjustable scaling and/or offset.
    - g. Accuracy shall be within 1 least-significant digit.
    - h. Manufacturers: One of the following or equal:
        - 1) Ametek Dixson.
        - 2) Yokogawa.
        - 3) Weschler Instruments.
- 4. Counters:
    - a. 6 digits.
    - b. Switch-selectable inputs:
        - 1) Switch contacts.
        - 2) CMOS.
        - 3) TTL.
        - 4) Magnetic pickup.
        - 5) RLC sensors.

    c. Selectable up/down control via external signal.
    d. Remote reset.
    e. Remote inhibit to prevent accumulating counts.
    f. Programmable to enable or disable front panel reset.
    g. Non-volatile memory to retain all data upon loss of supply power.
    h. Sunlight readable.
    i. Operating temperature: 0 to 50 degrees Celsius.
    j. Manufacturers: The following or equal:
        1) Red Lion, PAX Series.

C. Pilot devices:
  1. General:
    a. Provide operator pushbuttons, switches, and pilot lights, from a single manufacturer.
    b. Size:
        1) 30.5 millimeters.
    c. Heavy duty.
    d. Pushbuttons:
        1) Contacts rated:
            a) NEMA Type A600.
        2) Furnish 1 spare normally open contact and normally closed contact with each switch.
    e. Selector switches:
        1) Contacts rated:
            a) NEMA Type A600.
            b) Knob type.
        2) Furnish 1 spare normally open contact and normally closed contact with each switch.
        3) Provisions for locking in the OFF position where lockout provisions are indicated on the Drawings.
    f. Pilot lights:
        1) Type:
            a) LED for interior installations.
        2) Push to test.
        3) Lamp color:
            a) On/Running/Start: Red.
            b) Off/Stop: Green.
            c) Power: White.
            d) Alarm: Amber.
            e) Status or normal condition: White.
            f) Opened: Red.
            g) Closed: Green.
            h) Failure: Red.
  2. Indoor and outdoor areas:
    a. NEMA Type 4/13.
    b. Manufacturers: One of the following or equal:
        1) Allen-Bradley, Type 800T.
        2) Square D, Class 9001, Type K.
        3) IDEC, TWTD Series.
  3. Corrosive areas:
    a. NEMA Type 4X.
    b. Corrosion resistant.

    c. Exterior parts of high-impact strength fiberglass-reinforced polyester or multiple-layer epoxy-coated zinc.
    d. Manufacturers: One of the following or equal:
        1) Square D, Class 9001, Type SK.
        2) Allen-Bradley Type 800H.
        3) IDEC, TWTD Series.

D. Potentiometer and slidewire transmitters:
    1. Provide a DC output in proportion to a potentiometer input.
    2. Potentiometer input:
        a. 100 ohms to 100 K ohms.
        b. Impedance Greater or equal to 1 M ohms.
        c. Zero turn-up: 80 percent of full-scale input.
        d. Span turn-down: 80 percent of full-scale input.
    3. Field-configurable output:
        a. Voltage and current: All conventional current loops and voltage control signals.
    4. Accuracy including linearity and hysteresis within 0.1 percent maximum at 25 degrees Celsius.
    5. Operating temperature: 0 to 55 degrees Celsius.
    6. Supply power: 9 to 30 VDC.
    7. Manufacturers: The following or equal:
        a. Phoenix Contact.

E. Signal isolators and converters:
    1. Furnish signal isolators that provide complete isolation of input, output, and power input:
        a. Minimum isolation level: 1.5 kilovolts AC/50 hertz for at least 1 minute.
        b. Adjustable span and zero.
        c. Accuracy: Within 1.0 percent of span.
        d. Ambient temperature range: -20 to +65 degrees Celsius.
    2. Manufacturers: One of the following or equal:
        a. Phoenix Contact, MCR Series.
        b. Acromag, 1500, 600T, 800T, Flat Pack, or ACR Series.
        c. Action Instruments, Q500 Series or Ultra SlimPakII.
        d. AGM Electronics, Model TA-4000.

F. Relays:
    1. General:
        a. For all types of 120-VAC relays, provide surge protection across the coil of each relay.
        b. For all types of 24-VDC relays, provide a free-wheeling diode across the coil of each relay.
    2. General purpose:
        a. Magnetic control relays.
        b. NEMA Type A300 rated:
            1) 300 volts.
            2) 8 Amps continuous (minimum).
            3) 7,200 volt-amperes make.
            4) 720 volt-amperes break.
        c. Plug-in type.
        d. LED indication for energization status.

        e. Coil voltages: As required for the application.
        f. Minimum poles: DPDT.
        g. Touch-safe design: All connection terminals to be protected against accidental touch.
        h. Enclose each relay in a clear plastic heat and shock-resistant dust cover.
        i. Quantity and type of contact shall be as indicated on the Drawings or as needed for system compatibility.
        j. Relays with screw-type socket terminals.
        k. Provide additional (slave/interposing) relays when the following occurs:
            1) The number or type of contacts shown exceeds the contact capacity of the specified relays.
            2) Higher contact rating is required in order to interface with starter circuits or other equipment.
        l. DIN rail mounting on 35-millimeter rail.
        m. Ice-cube-type relays with retainer clips to secure relay in socket.
        n. Integrated label holder for device labeling.
        o. Manufacturers: One of the following or equal:
            1) Phoenix Contact, PLC Series.
            2) IDEC, R* Series (* = H, J, R, S, U).
            3) Allen-Bradley, Type 700 HC.
            4) Square D, Type K.

3. Latching:
    a. Magnetic-latching control relays.
    b. NEMA Type B300 rated:
        1) 300 volts.
        2) 10 Amps continuous.
        3) 3,600 volt-amperes make.
        4) 320 volt-amperes break.
    c. Plug-in type.
    d. DIN rail mounting on 35-millimeter rail.
    e. Coil voltage: As required for the application.
    f. Minimum poles: 2 PDT; as required for the application. Plus 1 spare pole.
    g. Touch-safe design: All connection terminals to be protected against accidental touch.
    h. Clear cover for visual inspection.
    i. Provide retainer clip to secure relay in socket.
    j. Manufacturers: One of the following or equal:
        1) Square D, 8501, Type K.
        2) IDEC, RR2KP Series.
4. Time delay:
    a. Provide time-delay relays to control contact transition time.
    b. Contact rating:
        1) 240 volts.
        2) 10 Amps continuous.
        3) 3,600 volt-amperes make.
        4) 360 volt-amperes break.
    c. Coil voltage: As required for the application.
    d. Provide pneumatic or electronic type with on-delay, off-delay, and on/off-delay:

        1) For off-delay, use true power-off time-delay relays. Where the required timing range exceeds capability of the off-delay relay use, signal off-delay where power loss will not cause undesirable operation or pneumatic time-delay relays.
    e. Minimum poles: 2 PDT.
    f. Units include adjustable dial with graduated scale covering the time range in each case.
    g. Minimum timing range: 0.1 seconds to 10 minutes, or as required for the application.
    h. Manufacturers: One of the following or equal:
        1) IDEC, RTE Series.
        2) Allen-Bradley, Type 700-HR.

G. Terminal blocks:
1. DIN rail mounting on 35-millimeter rail.
2. Suitable for specified AWG wire.
3. Rated for 15 amperes at 600 volts.
4. Screw terminal type.
5. Provide mechanism to prevent wire connection from loosening in environments where vibration is present. This mechanism shall not cause permanent deformation to the metal body.
6. Finger-safe protection for all terminals for conductors.
7. Construction: Polyamide insulation material capable of withstanding temperature extremes from - 40 to 105 degrees Celsius.
8. Terminals: Plainly identified to correspond with markings on the diagrams:
    a. Permanent machine-printed terminal identification.
9. Disconnect-type field signal conductor terminals with socket/screw for testing.
10. Identify terminals suitable for use with more than 1 conductor.
11. Position:
    a. So that the internal and external wiring does not cross.
    b. To provide unobstructed access to the terminals and their conductors.
12. Provide minimum 25-percent spare terminals.
13. Manufacturers: One of the following or equal:
    a. Phoenix Contact, UT4 Series.
    b. Allen-Bradley, 1492 Series.

H. Wire duct:
1. Provide flame retardant plastic wiring duct, slotted with dust cover.
2. Type:
    a. Wide slot.
    b. Narrow slot.
    c. Round hole.
3. Manufacturers: The following or equal:
    a. Panduit.

I. Din rail:
1. Perforated steel.
2. 35 mm width.
3. 15 mm deep.
4. Provide 2-inch offset using one of the following:
    a. Offset brackets.
    b. Preformed standoff Din Rail Channel.

J. Surge protection devices:
  1. 120-volt control power for panels:
    a. Panels without a UPS:
      1) Provide surge protection device (SPD) for panel power entrances:
        a) Nominal 120-VAC with a nominal clamping voltage of 200 volts.
        b) Non-faulting and non-interrupting design.
        c) A response time of not more than 5 nanoseconds.
      2) Control panel power system level protection, non-UPS powered:
        a) Designed to withstand a maximum 10-kA test current of an 8/20 µs waveform according to IEEE C62.41.1 Category C Area.
        b) For panels receiving power at 120 VAC, provide surge protection at secondary of main circuit breaker.
        c) Provide both normal mode noise protection (line to neutral) and common mode (neutral to ground) surge protection.
        d) DIN rail mounting.
        e) Attach wiring to the SPD by means of a screw-type cable-clamping terminal block:
          (1) Gastight connections.
          (2) The terminal block: Fabricated of non-ferrous, non-corrosive materials.
        f) Visual status indication of MOV status on the input and output circuits.
        g) Dry contact rated for at least 250 VAC, 1 Amp for remote status indication.
        h) Meeting the following requirements:
          (1) Response time: Less than or equal to 100 ns.
          (2) Attenuation: Greater than or equal to -40 dB at 100 kilovolt-hertz as determined by a standard 50-ohm insertion test.
          (3) Safety approvals:
            (a) UL 1283 (EMI/RFI Filter).
            (b) UL 1449 2nd Edition.
        i) Manufacturers: One of the following or equal:
          (1) Phoenix Contact, Type SFP Filter.
          (2) Citel.
          (3) Edco.
    b. Panels with a UPS:
      1) Provide surge protection on the control power source at each panel containing power supplies, or electronic components including PLCs, I/O, HMI, and digital meters.
      2) Location:
        a) For panels with a UPS, install surge protection ahead of UPS and maintenance bypass switch.
          (1) Surge protection is not required for 120-VAC circuits that are only used for panel lights and receptacles.
      3) MCOV: 150 VAC.
      4) Surge capability (8/20 µs wave): 10 kA.
      5) Peak let-through: 620V L-N, 850V L-G.
      6) Manufacturers: One of the following or equal:
        a) Phoenix Contact, Plugtrab PT Series.
        b) Citel.
        c) Edco.

        c. For panels receiving power at 480 VAC, provide surge protection on the 120-VAC control power transformer secondary.
    2. Instrument, data, and signal line protectors (traditional I/O) - panel mounted:
        a. Surge protection minimum requirements: Withstand a 10-kA test current of an 8/20 µs waveform in accordance with IEEE C62.41.1 Category C Area.
        b. DIN rail mounting on 35-millimeter rail (except field-mounted SPDs).
        c. SPDs consisting of 2 parts:
            1) A base terminal block.
            2) A plug protection module:
                a) Replacing a plug shall not require the removal of any wires nor interrupt the signal.
                b) Base and plug coded to accept only the correct voltage plug.
        d. SPD:
            1) Manufacturers: One of the following or equal:
                a) Phoenix Contact, Plugtrab Series.
                b) Citel.
                c) Edco.
    3. Instrument, data, and signal line protectors (traditional I/O) - field mounted:
        a. Surge protection minimum requirements: Withstand a minimum 10-kA test current of an 8/20 µs waveform in accordance with IEEE C62.41.1 Category C Area.
        b. Manufacturers: One of the following or equal:
            1) Plugtrab, PT Series.
            2) Citel.
            3) Edco.

K. Horns and beacons:
    1. Beacons/horn combination units:
        a. Manufacturers: The following or equal:
            1) Federal Signal Corp., Multi-Status LED 108i with tone module.
        b. LED Colors: Red, Green, and Amber.
        c. Power: 120VAC.
        d. Provide accessories such as pipe mount flange, pipe extensions, corner mount brackets, or wall mount brackets as needed.
        e. Horn rated 80 dB minimum at 10 feet.
    2. Dedicated beacon unit:
        a. Manufacturers: One of the following or equal:
            1) Federal Signal Corp., Starfire Series.
            2) Allen-Bradley, 855 B *-* 10 Series.
            3) Edwards, 102 Series.
    3. Dedicated horn unit:
        a. Electromechanical:
            1) Manufacturers: One of the following or equal:
                a) Federal Signal, 350 or 31X Series.
                b) Edwards, 878EX or 879EX Series.
        b. Electronic:
            1) Manufacturers: One of the following or equal:
                a) Federal Signal, 300GCX or 300X Series.
                b) Allen-Bradley, 855H or 855XH Series.
                c) Edwards, 5530M or 5533MD Series.
        c. Rated for 80 dB minimum at 10 feet.

L. Power supplies:
   1. Design power supply system so that either the primary or backup supply can be removed, repaired, and returned to service without disrupting the system operation.
   2. Convert 120 VAC to 24-volt DC or other DC voltages required or as required for the application.
   3. Provide backup 24 VDC power supply units to automatically supply the load upon failure of the primary supply.
   4. Provide power supply arrangement that is configured with several modules to supply adequate power in the event of a single module failure:
      a. Provide automatic switchover upon module failure.
      b. Alarm contacts monitored by the PLC.
   5. Sized to provide 40-percent excess rated capacity.
   6. UL 508C listed to allow full-rated output without de-rating.
   7. Provide fuse or short-circuit protection.
   8. Provide a minimum of 1 set of dry contacts configured to change state on failure for monitoring and signaling purposes.
   9. Output regulation: Within 0.05 percent for a 10-percent line change or a 50-percent load change:
      a. With remote voltage sensing.
   10. Operating temperature range: 0 to 50 degrees Celsius.
   11. Touch-safe design: All connection terminals to be protected against accidental touch.
   12. DIN rail mounting on 35-millimeter rail.
   13. Provide self-protecting power supplies with a means of limiting DC current in case of short circuit.
   14. Manufacturers: One of the following or equal:
      a. Phoenix Contact, Quint.
      b. Weidmueller.
      c. Schneider Electric.

M. Limit switches:
   1. NEMA Type 4X.
   2. AC contact rating 120 volts, 10 A.
   3. DC contact rating 125 volts, 0.4 A.
   4. Provide robust actuation mechanism not prone to degradation.
   5. Provide complete actuator mechanism with all required hardware.
   6. Allows for contact opening even during contact weld condition.
   7. UL approved.
   8. Operating temperature range: -18 to +110 degrees Celsius (0 to 230 degrees Fahrenheit).
   9. Manufacturers: One of the following or equal:
      a. Allen-Bradley, 802 Series.
      b. Honeywell, HDLS Series.
      c. Omron, D4 Series.
      d. Eaton, E47, E49, E50.
      e. ABB.

2.07 ACCESSORIES

A. As specified in Section 17050 - Common Work Results for Process Control and Instrumentation Systems.

B. Provide panels with an inside protective pocket to hold the panel drawings. Ship panels with 1 copy of accepted Shop Drawings including, but not limited to, schematic diagram, connection diagram, and layout drawing of control wiring and components in a sealed plastic bag stored in the panel drawing pocket.

C. Provide 15-inch floor stands or legs where needed or as indicated on the Drawings.

D. Provide a folding shelf for enclosures that contain programmable controllers. The shelf shall be mounted on the inside surface of the door, capable of supporting a laptop computer.

E. Provide nameplate to each panel as indicated on the Drawings:
   1. Provide as specified in Section 16075 - Identification for Electrical Systems on all internal and external instruments and devices.
   2. Provide a nameplate with the following markings that is plainly visible after installation:
      a. Manufacturer’s name, trademark, or other descriptive marking by which the organization responsible for the panel can be identified.
      b. Supply voltage, phase, frequency, and full-load current.
      c. Power source or circuit ID.
      d. Short-circuit current rating of the panel based on one of the following:
         1) Short-circuit current rating of a listed and labeled assembly.
         2) Short-circuit current rating established utilizing an approved method.

F. Provide a window kit where indicated on the Drawings or where a transmitter with display is mounted inside a control panel. The window shall meet the following requirements:
   1. Safety plate glass.
   2. Secured by rubber locking seal.
   3. Allow full viewing of devices issuing visual process data or diagnostics.

G. Lighting:
   1. Provide 1 luminaire for each section, on the interior of the panel, spaced evenly along the top-front of the enclosure door opening(s):
      a. Covered or guarded.
      b. Provide On-Off door-activated switches where indicated on the Drawings.
      c. 120-volt, single-phase, 15-amp style plug.
      d. Provide 4,000 K, 900 Lumens - LED fixture.
         1) Provide additional fixtures for every 36 inches of width.

H. Receptacles:
   1. Provide 1 duplex receptacle located every 4 feet of enclosure width, spaced evenly along the back mounting panels, DIN Rail mounted.
   2. GFCI, 120-volt, single-phase, 15-amp style plug.
   3. Provide circuit breaker or fuse to limit receptacle draw to 5 amperes.

I. Grounding:
   1. Provide the following:
      a. Grounding strap between enclosure doors and the enclosure.
      b. Equipment grounding conductor terminals.
      c. Provide equipment ground bus with lugs for connection of all equipment grounding wires.

        - d. Bond multi-section panels together with an equipment grounding conductor or an equivalent grounding bus.
    2. Identify equipment grounding conductor terminals with the word “GROUND,” the letters “GND,” the letter “G,” or the color green.
    3. Signal (24 VDC) grounding: Terminate each drain wire of a signal (shielded) cable to a unique grounding terminal block, or common ground bus at the end of the cable as shown on the Loop Drawings.
    4. Ensure the continuity of the equipment grounding system by effective connections through conductors or structural members.
    5. Design so that removing a device does not interrupt the continuity of the equipment-grounding circuit.
    6. Provide an equipment-grounding terminal for each incoming power circuit, near the phase conductor terminal.
    7. Size ground wires in accordance with NEC and UL Standards, unless noted otherwise.
    8. Connect all exposed, noncurrent-carrying conductive parts, devices, and equipment to the equipment-grounding circuit.
    9. Connect the door stud on the enclosures to an equipment-grounding terminal within the enclosure using an equipment-bonding jumper.
    10. Bond together all remote and local control panels, processor racks, and conductive enclosures of power supplies and connect to the equipment-grounding circuit to provide a common ground reference.

J. Provide sunshades and insulation for all outdoor installations.

2.08 MIXES (NOT USED)

2.09 FABRICATION (NOT USED)

2.10 FINISHES

A. Finishes:
    1. Metallic (non-stainless):
        - a. Metal surfaces of panels shall be prepared by chemical cleaning and mechanical abrasion in accordance with the finish manufacturer’s recommendations to achieve a smooth, well-finished surface.
        - b. Scratches or blemishes shall be filled before finishing. One coat of zinc phosphate shall be applied per the manufacturer’s recommended dry-film thickness and allowed to dry before applying the finish coat.
        - c. Finish coat shall be a baked polyester-urethane powder, aliphatic air-dry polyurethane, or epoxy enamel to meet NEMA rating specified application.
        - d. Exterior of enclosures located outdoors shall be UV-resistant polyester powder coating. Total dry film thickness shall be 3 mils, minimum.
    2. Stainless steel:
        - a. Stainless enclosures shall be provided with a Number 4 brushed finish - not painted.

B. Colors:
    1. Exterior color of panels mounted indoors shall be manufacturer’s standard light gray.
    2. Exterior of panels mounted outdoors shall be manufacturer’s standard white.
    3. Panel interiors shall be manufacturer’s standard white.

2.11 SOURCE QUALITY CONTROL

A. As specified in Section 17050 - Common Work Results for Process Control and Instrumentation Systems.

PART 3 EXECUTION

3.01 EXAMINATION

A. Examine the installation location for the instrument and verify that the instrument will work properly when installed.
   1. Notify the Engineer promptly if any installation condition does not meet the instrument manufacturer’s recommendations or specifications.

3.02 PREPARATION (NOT USED)

3.03 INSTALLATION

A. Install enclosures so that their surfaces are plumb and level within 1/8-inch over the entire surface of the panel; anchor securely to wall and structural supports at each corner, minimum. Direct attachment to drywall is not permitted.

B. Provide floor stand kits for wall-mounted enclosures larger than 48 inches high.

C. Provide 3-1/2-inch high concrete housekeeping pads for freestanding enclosures.

D. Install gasket and sealing material under panels with floor slab cutouts for conduit:
   1. Undercoat floor-mounted panels.

E. Provide a full-size equipment-grounding conductor in accordance with NEC included with the power feeder. Terminate to the incoming power circuit-grounding terminal.

F. All holes for field conduits, etc. shall be cut in the field. There shall be no additional holes, factory cut holes, or hole closers allowed. Incorrect holes, additional holes, or mis-cut holes shall require that the entire enclosure be replaced.

G. Control panels that are adjacent to motor control centers shall be fully wired to the motor control centers using wireways integral to the motor control center or additional conduits as needed. These interconnections are not shown or reflected on the Conduit Schedule, but shall be shown on the Loop Drawings prepared by the Contractor.

H. Provide individually fused analog input module points with blown-fuse indicator lights, mounted external of the module on the output terminal strip.

I. Side panels:
   1. Side panels shall be kept free off all control equipment and devices. Any deviation must be sent to the engineer in writing asking for a deviation.

3.04 ERECTION, INSTALLATION, APPLICATION, AND CONSTRUCTION (NOT USED)

3.05 REPAIRS/RESTORATION (NOT USED)

3.06 RE-INSTALLATION (NOT USED)

3.07 FIELD QUALITY CONTROL

A. As specified in Section 17050 - Common Work Results for Process Control and Instrumentation Systems.

3.08 ADJUSTING (NOT USED)

3.09 CLEANING

A. As specified in Section 17050 - Common Work Results for Process Control and Instrumentation Systems.

3.10 DEMONSTRATION AND TRAINING (NOT USED)

3.11 PROTECTION

A. As specified in Section 17050 - Common Work Results for Process Control and Instrumentation Systems.

3.12 SCHEDULES (NOT USED)

END OF SECTION

SECTION 17712

CONTROL SYSTEMS: UNINTERRUPTIBLE POWER SUPPLIES 10 KVA AND BELOW

PART 1 GENERAL

1.01 SUMMARY

A. Section includes:
   1. Single-phase double conversion uninterruptible power supplies rated 10 kilovolt-amperes and below.
   2. Uninterruptible power supplies rated 10 kilovolt-amperes and below.

1.02 REFERENCES

A. As specified in Sections 16050 - Common Work Results for Electrical and 17050 - Common Work Results for Process Control and Instrumentation Systems.

B. Federal Communications Commission (FCC):
   1. FCC Part 15, Class A.
   2. FCC Part 15, Class B.

C. Institute of Electrical and Electronic Engineers (IEEE):
   1. 519 - IEEE Recommended Practices and Requirements for Harmonic Control in Electrical Power Systems.
   2. 1184 - IEEE Guide for Batteries for Uninterruptible Power Supply Systems.
   3. C62.41 - IEEE Recommended Practice for Surge Voltages in Low-Voltage AC Power Circuits.

D. Underwriters Laboratories, Inc. (UL):
   1. UL 1778 - Standard for Uninterruptible Power Supply Systems and Equipment.

1.03 DEFINITIONS

A. As specified in Sections 16050 - Common Work Results for Electrical and 17050 - Common Work Results for Process Control and Instrumentation Systems.

B. Specific definitions:
   1. Critical load: Load supplied by the UPS.
   2. MOV: Metal oxide varistor.

1.04 SYSTEM DESCRIPTION

A. Provide complete, factory-assembled, wired, and tested, true on-line double conversion UPS equipment including, but not limited to, rectifier, DC bus, inverter, battery charger, batteries, automatic bypass, and ancillary components as specified in this Section and as indicated on the Drawings.

B. UPS loads as indicated on the Drawings.

1.05 SUBMITTALS

A. Furnish submittals as specified in Sections 01330 - Submittal Procedures and 17050 - Common Work Results for Process Control and Instrumentation Systems.

B. Product data:
   1. Manufacturer and model number.
   2. Catalog data.
   3. Dimensions:
      a. Height.
      b. Width.
      c. Depth.
      d. Weight.
   4. Ratings:
      a. Input voltage.
      b. Output voltage.
      c. Input/output power factor.
      d. Efficiency.
      e. Harmonic distortion.
      f. Runtime.
   5. Noise specifications.
   6. Heat dissipation.
   7. Warranties and maintenance contracts:
   8. All communications requirements such as software, cards, etc.
   9. Alarms and status available for remote monitoring and system health.

C. Shop drawings:
   1. Power distribution block diagrams.
   2. Front and rear views of equipment enclosures:
      a. Front elevation including all control and indicating devices.
   3. Support points and weight of overall equipment.
   4. Schematic and control wiring diagrams including, but not limited to:
      a. Line and load terminals.
      b. Alarm and status terminals.
      c. Manual maintenance bypass switch terminals.
      d. External Battery or Step-down/Step-up Transformers if any.
      e. External wiring requirements for all communication signals.
   5. Switching and overcurrent protective devices.

D. Calculations:
   1. Include derating for temperature and elevation as necessary.
   2. UPS sizing computation:
      a. Apply safety factors as specified in this Section.
      b. Provide itemized list of critical loads, including individual VA and watt ratings.
   3. Battery time calculation based on specified runtime for total load with the safety factor multiplied to it. Table/graph for back-up time calculation.
   4. Load calculation shall include power for all shown in the power distribution drawing, which include but not limited to PLC power supply, field instruments (120VAC and 24VDC), Instrument power, Ethernet switches, and I/O modules. Refer to Network Drawings for additional information and notes.
   5. Total battery recharge time as a function of capacity utilized.

E. Record documents:
   1. Provide Record Drawings of installed unit(s) including layout and wiring.

F. Manufacturer's field reports.

G. Operation and maintenance manuals:
   1. System instruction manuals that describe troubleshooting, installation, operations, and safety procedures.
   2. Recommendations for maintenance procedures and intervals.
   3. Battery data/replacement information.
   4. Parts list.

1.06 QUALITY ASSURANCE

A. Manufacturer qualifications:
   1. A minimum of 10 years' experience in the design, manufacture, and testing of solid-state UPS systems.
   2. ISO 9001 certified.

B. Regulatory requirements for complete UPS system:
   1. UL listed per UL Standard 1778.
   2. IEEE C62.41, Categories A & B.
   3. FCC 15:
      a. Greater than 2,000 VA - Class A.
      b. Less than 2,000 VA - Class B.

1.07 DELIVERY, STORAGE, AND HANDLING

A. As specified in Section 17050 - Common Work Results for Process Control and Instrumentation Systems.

1.08 PROJECT OR SITE CONDITIONS

A. As specified in Section 17050 - Common Work Results for Process Control and Instrumentation Systems.

1.09 SEQUENCING (NOT USED)

1.10 SCHEDULING (NOT USED)

1.11 WARRANTY

A. As specified in Section 17050 - Common Work Results for Process Control and Instrumentation Systems.

1.12 SYSTEM START-UP (NOT USED)

1.13 OWNER'S INSTRUCTIONS (NOT USED)

1.14 COMMISSIONING (NOT USED)

1.15 MAINTENANCE (NOT USED)

PART 2 PRODUCTS

2.01 MANUFACTURERS

A. Double-conversion true-online UPS manufacturers: One of the following or equal:
   1. Free-standing UPS, 700-3,000 VA:
      a. Vertiv, Liebert GXT4.
      b. Eaton Corp., Powerware 9130.
      c. APC.
   2. Rack-mounted UPS, 700-3,000 VA:
      a. Vertiv, Liebert GXT4.
      b. Eaton Corp., Powerware 9130 RM.
      c. APC.

2.02 EXISTING PRODUCTS (NOT USED)

2.03 MATERIALS (NOT USED)

2.04 MANUFACTURED UNITS

A. Double conversion true on-line UPS system requirements:
   1. System characteristics:
      a. Provide rack-mount or free-standing UPS as specified and as indicated on the Drawings.
      b. The minimum VA rating of the UPS shall be greater than or equal to a safety factor of 1.5 times the connected load or 700 VA, whichever is greater.
      c. Battery runtime at full load and site ambient temperature shall be a minimum of 15 minutes.
      d. Efficiency greater than 85 percent AC-AC, all modes.
      e. Acoustical noise:
         1) Less than 55 dBA at 5 feet.
      f. Output connections:
         1) Receptacles:
            a) 700-2,500 VA units:
               (1) Provide a minimum of four NEMA Type 5-15R or Type 5-20R receptacles.
            b) 3,000 VA units:
               (1) Provide a minimum of four NEMA Type 5-20R receptacles.
               (2) Provide at least one NEMA Type L5-30R receptacle.
            c) Greater than 3,000 VA units:
               (1) Provide a minimum of four NEMA Type 5-20R receptacles.
               (2) Provide at least one NEMA Type L14-30R receptacle.
         2) Provide hardwired connections as indicated on the Drawings.
      g. Protection:
         1) Undervoltage:
            a) Operate on battery power if incoming source voltage goes below UPS system limits of operation.
         2) Overvoltage:
            a) Operate on battery power if incoming source voltage exceeds UPS system limits of operation.

            3) Overcurrent:
                a) Provide input and output current-limiting protection to ensure adequate overcurrent protection for UPS.
            4) Surge protection:
                a) MOV-based.

2. Electrical characteristics:
    a. AC input:
        1) Single-phase.
        2) Voltage 120Vac.
            a) Fully functional within +10 percent, -15 percent of nominal voltage at full load without depleting battery.
            b) 120 V input:
                (1) 2-wire plus ground.
        3) Current:
            a) Reflected total harmonic distortion (THD) less than 25 percent at rated load.
        4) Frequency range of operation:
            a) 57-63 hertz.
        5) Power factor:
            a) Not less than 0.95 lagging at rated load.
    b. AC output:
        1) Single-phase.
        2) Voltage:
            a) Regulation:
                (1) Within 3 percent for 3,000 VA rating and below.
                (2) Within 5 percent for greater than 3,000 VA rating - static load.
                (3) Within 10 percent for greater than 3,000 VA rating - dynamic load.
            b) Total harmonic distortion (THD) when operating on incoming power:
                (1) Not more than 3 percent for linear loads with a crest factor of 3:1.
                (2) Not more than 5 percent for non-linear loads with a crest factor of 3:1.
            c) Transient response:
                (1) Within 7 percent for a 20-100 percent step load.
                (2) Transient recovery time to nominal voltage within 166 milliseconds.
        3) Load power factor:
            a) UPS shall be capable of supporting the critical loads for all power factors experienced for their full range of operation.
        4) Frequency regulation:
            a) Within 3.5 hertz when on utility power.
            b) Within 1.0 hertz when on UPS power.
3. Environmental requirements:
    a. Operating ambient temperature:
        1) UPS module: 50 degrees Fahrenheit to 104 degrees Fahrenheit (10 degrees Celsius to 40 degrees Celsius).
        2) Battery: 68 degrees Fahrenheit to 86 degrees Fahrenheit (20 degrees Celsius to 30 degrees Celsius).

- b. Operating altitude:
  - 1) Project site conditions as specified in Sections 16050 - Common Work Results for Electrical and 17050 - Common Work Results for Process Control and Instrumentation Systems

4. System components:
   - a. Surge protective devices:
     - 1) MOV-supplied protection.
   - b. Inverter:
     - 1) Pulse-width modulated AC output signal.
     - 2) Overload withstand minimum time without transferring to bypass:
       - a) 101 to 110 percent for 2 minutes.
       - b) 111 to 125 percent for 10 seconds.
       - c) 126 to 150 percent for 1 second.
       - d) Greater than 150 percent for 96 milliseconds.
     - 3) Transfer load to bypass when overload capacity is exceeded.
   - c. Battery rectifier/charger:
     - 1) Recharge batteries to 90 percent in 6 hours or less.
   - d. Batteries:
     - 1) VRLA (valve regulated lead acid), sealed, maintenance free.
     - 2) Minimum 3-year float service life at 25 degrees Celsius.
     - 3) Integral to UPS enclosure or housed in a matching enclosure.
     - 4) Less than and including 6,000 VA: Hot-swappable.
     - 5) Automatically perform routine battery health monitoring and provide visual, audible, and/or serial warnings if abnormal battery conditions exist.
   - e. Automatic bypass switch:
     - 1) Integral to UPS system.
     - 2) Sense UPS overload, inverter failure, or over temperature, and automatically transfer loads to source power.
     - 3) Maximum detect and transfer time of 4-6 milliseconds.
     - 4) Automatic re-transfer without power interruption to critical load.
     - 5) Input shall match output in phase, voltage, frequency, and grounding.
     - 6) Rated to carry the full input current of the UPS.
     - 7) Provide ability for manual operation.
   - f. Manual maintenance bypass switch:
     - 1) Provides isolation of the UPS for maintenance purposes.
     - 2) Make-before-break design so that UPS can be isolated from the critical loads by placing these loads on source power without interruption of operation.
     - 3) Utility and UPS status indications.
     - 4) Supply necessary input/output cords and receptacles for connections with power source and UPS.
     - 5) Transfer time less than 6 milliseconds.
     - 6) Rated to carry the full input current of the UPS.
     - 7) Standalone UL-listed.
     - 8) Input match output in phase, voltage, frequency, and grounding.
     - 9) UPS input connection and UPS output plug:
       - a) 700 to 3,000 VA units: NEMA receptacle and plug to match UPS connections.
       - b) Above 3,000 VA units: NEMA receptacle and plug or hardwiring to match UPS connections.

            10) Utility and load connections:
                a) As indicated on the Drawings.
            11) 700 to 3,000 VA units: One of the following or equal:
                a) Vertiv, Liebert Micropod 2U.
                b) Eaton Corp., Powerware HotSwap.
            12) Above 3,000 VA units: By manufacturer of UPS, with connections matched for operation with UPS.
        g. UPS chassis:
            1) Electrically isolate from AC output neutral.
            2) Include an equipment ground terminal.
        h. Cooling:
            1) Forced air cooled.
        i. Locally displayed system indicators:
            1) Audible alarms during abnormal conditions:
                a) UPS fault or overload condition.
                b) Battery on.
                c) Low battery.
                d) Automatic bypass on/off.
                e) Input power on.
                f) Battery testing mode.
        j. Controls:
            1) Front-panel pushbuttons:
                a) UPS start-up, shutdown, and manual bypass (for automatic bypass).
                b) Testing.
                c) Visual/audible alarms reset.
            2) Applicable controls as specified in Communications Requirements.
        k. Alarm contacts:
            1) Provide relay interface card and required interposing relays for 120 VAC discrete input status signals:
                a) Low battery.
                b) UPS alarm.
                c) On UPS power.
        l. Communications requirements:
            1) Ethernet via SNMP - allow remote indication of all alarms and status signals present in the UPS:
                a) Provide manufacturer's software as required.

B. Rack-mount Standby UPS requirements:
    1. Provide rack-mount or free-standing UPS as specified and as indicated on the Drawings.
    2. The minimum VA rating of the UPS shall be greater than or equal to a safety factor of 1.5 times the connected load or 700 VA, whichever is greater.
    3. Battery runtime at full load and site ambient temperature shall be a minimum of 15 minutes.

2.05 EQUIPMENT (NOT USED)

2.06 COMPONENTS (NOT USED)

2.07 ACCESSORIES (NOT USED)

2.08 MIXES (NOT USED)

2.09 FABRICATION (NOT USED)

2.10 FINISHES (NOT USED)

2.11 SOURCE QUALITY CONTROL (NOT USED)

PART 3 EXECUTION

3.01 EXAMINATION (NOT USED)

3.02 PREPARATION (NOT USED)

3.03 INSTALLATION

A. Install equipment in accordance with manufacturer's instructions.

B. Do not utilize extension cords, adapters, or other electrical connectors for UPS input.

3.04 ERECTION, INSTALLATION, APPLICATION, CONSTRUCTION (NOT USED)

3.05 REPAIRS/RESTORATION (NOT USED)

3.06 RE-INSTALLATION (NOT USED)

3.07 FIELD QUALITY CONTROL

A. Perform inspections and test procedures before UPS startup:
   1. Inspect equipment for signs of damage.
   2. Verify installation as indicated on the Drawings and specified in the Specifications.
   3. Inspect cabinets for foreign objects.
   4. Verify neutral and ground conductors are properly sized and terminated.
   5. Inspect battery cases.
   6. Inspect batteries for proper polarity.
   7. Check power and control wiring for tightness.
   8. Check terminal connectors for tightness.
   9. Ensure connection and voltage of the battery string(s).

3.08 ADJUSTING (NOT USED)

3.09 CLEANING

A. As specified in Section 17050 - Common Work Results for Process Control and Instrumentation Systems.

3.10 DEMONSTRATION AND TRAINING (NOT USED)

3.11 PROTECTION

A. As specified in Section 17050 - Common Work Results for Process Control and Instrumentation Systems.

END OF SECTION

THIS PAGE INTENTIONALLY LEFT BLANK

SECTION 17720

CONTROL SYSTEMS: PROGRAMMABLE LOGIC CONTROLLERS

PART 1 GENERAL

1.01 SUMMARY

A. Section includes:
   1. Programmable logic controller (PLC) based control systems hardware.
   2. Development software to be used with the specified PLC hardware.

1.02 REFERENCES

A. As specified in Section 17050 - Common Work Results for Process Control and Instrumentation Systems.

B. Institute of Electrical and Electronics Engineers (IEEE).

1.03 DEFINITIONS

A. As specified in Section 17050 - Common Work Results for Process Control and Instrumentation Systems.

B. Specific definitions:
   1. CPU: Central processing unit.
   2. I/O: Input/Output.

C. Specific definitions:
   1. Development operating software: The software provided by the PLC manufacturer for use in programming the PLC.
   2. Application software: The software that is programmed specifically for the Project.

1.04 SYSTEM DESCRIPTION

A. Provide all PLC hardware as indicated on the Drawings and as specified in this Section.

1.05 SUBMITTALS

A. Furnish submittals as specified in Sections 01330 - Submittal Procedures and 17050 - Common Work Results for Process Control and Instrumentation Systems.

B. Product data:
   1. CPU:
      a. Processor type.
      b. Processor speed.
      c. Memory.
      d. Internal processor battery backup time.

2. I/O modules:
    a. Type.
    b. Standard wiring diagram.

C. Calculations:
1. Submit calculations or documented estimate to verify that memory requirements of this Section are met, including spare requirements. If possible, use PLC manufacturer's calculation or estimating worksheet.
2. Submit calculations to verify that spare I/O requirements of this Section are met.
3. Submit calculations to verify that PLC power supply requirements of this Section are met.

D. Product data:
1. Programming languages.
2. Operating system requirements.

E. Control logic:
1. Fully annotated copy of programmed PLC logic.
2. Cross-referenced index of all PLC registers or points.

F. Provide application software for the specific Project process requirements.
1. Fully annotated copy of programmed PLC logic in its native format.
2. Cross-referenced index of all PLC registers or points.

1.06 QUALITY ASSURANCE

A. As specified in Section 17050 - Common Work Results for Process Control and Instrumentation Systems.

B. Provide PLC hardware manufactured at facilities certified to the quality standards of ISO 9001.

C. Additional requirements:
1. Provide PLC system components by a single manufacturer:
    a. Third-party communication modules may be used only for communication or network media functions not provided by the PLC manufacturer.
2. Use PLC manufacturer approved hardware, such as cable, mounting hardware, connectors, enclosures, racks, communication cable, splitters, terminators, and taps.
3. All PLC hardware, CPUs, I/O devices, and communication devices shall be new, free from defects, and produced by manufacturers regularly engaged in the manufacture of these products.

1.07 DELIVERY, STORAGE, AND HANDLING

A. As specified in Section 17050 - Common Work Results for Process Control and Instrumentation Systems.

1.08 PROJECT OR SITE CONDITIONS

A. As specified in Section 17050 - Common Work Results for Process Control and Instrumentation Systems.

1.09 SEQUENCING (NOT USED)

1.10 SCHEDULING (NOT USED)

1.11 WARRANTY

A. As specified in Section 17050 - Common Work Results for Process Control and Instrumentation Systems.

1.12 SYSTEM START-UP (NOT USED)

1.13 OWNER'S INSTRUCTIONS (NOT USED)

1.14 COMMISSIONING (NOT USED)

1.15 MAINTENANCE

A. As specified in Section 17050 - Common Work Results for Process Control and Instrumentation Systems.

B. Installed spare requirements:
   1. I/O points:
      a. Provide total of 25 percent spare I/O capacity for each type of I/O at every PLC and remote inputs and outputs (RIO).
      b. Wire all spare I/O points to field terminal blocks in the same enclosure the PLC resides in.
   2. PLC backplane capacity:
      a. Provide 25-percent or 3 spare backplane slots, whichever is greater, in all racks containing I/O.

PART 2 PRODUCTS

2.01 MANUFACTURERS

A. Provide the following manufacturer, no equal:
   1. Modicon:
      a. M580 with redundant processors shall be provided for the PLC-1-1.
      b. M340 shall be provided for all other PLCs.

2.02 EXISTING PRODUCTS (NOT USED)

2.03 MATERIALS (NOT USED)

2.04 MANUFACTURED UNITS

A. Programmable logic controller:
   1. Refer to Polk County Chapter 7 of the USSM for specific model numbers and coordinate with the Owner for exact modules to ensure final selections match Owner standards.
   2. Construction:
      a. Furnish plug-in modular system.

    b. Provide PLCs capable of operating in a hostile industrial environment without fans, air conditioning, or electrical filtering:
        1) Temperature: 0 to 60 degrees Celsius.
        2) RFI: 80 to 1,000 MHz.
        3) Vibration: 10 to 500 hertz.
        4) Humidity: 0 to 95 percent.
    c. Provide internal power supplies designed to protect against overvoltage and frequency distortion characteristics frequently encountered with the local power utility.
    d. Design the PLC system to function as a standalone unit that performs all of the control functions described in this Section completely independent from the functions of the HMI system PC-based operator interfaces:
        1) Failure of the HMI system shall not impact data acquisition, control, scaling, alarm checking, or communication functions of the PLC.

3. CPU:
    a. Configure each CPU so that it contains all the software relays, timers, counters, number storage registers, shift registers, sequencers, arithmetic capability, and comparators necessary to perform the specified control functions.
    b. Capable of interfacing with all discrete inputs, analog inputs, discrete outputs, analog outputs, and communication cards to meet the specified requirements.
    c. Capable of supporting and implementing closed-loop floating-point math and PID control that is directly integrated into the CPU control program.
4. Memory:
    a. Non-volatile memory: On-board complementary metal-oxide-semiconductor (CMOS), electrically erasable programmable read-only memory (EEPROM), PCMCIA, compact flash card, or SD card.
    b. Supply with sufficient memory to implement the specified control functions plus a reserve capacity as specified with the requirements of this Section:
        1) Reserve capacity:
            a) Totally free from any system use.
        2) Programmed in a multi-mode configuration with multiple series or parallel contacts, function blocks, counters, timers, and arithmetic functions.
5. Programming:
    a. Provide a system where processors are programmed by:
        1) Portable laptop computer both locally and via the PLC control network.
6. PLC power supply:
    a. Input: 24VDC.
    b. Mounted in the PLC housing or as indicated on the Drawings.
    c. Sized to power all modules mounted in that housing including an average module load for any empty housing slots plus 50 percent above that total.
7. PLC input/output, I/O modules:
    a. General:
        1) Compatible with all of the PLCs being furnished under the contract and by the same manufacturer as the PLCs.
        2) Provide I/O modules that:
            a) Isolate in accordance with IEEE Surge Withstand Standards and NEMA Noise Immunity Standards.

        - b) Provide A/D and D/A converters with optically or galvanically isolated inputs and outputs.
        - c) Accept dual-ended inputs.
    - 3) The use of common grounds between I/O points is not acceptable.
    - 4) Provide modules that are removable without having to disconnect wiring terminals:
        - a) Utilize a swing-arm or plug-in wiring connector.
    - 5) Provide at each PLC the I/O modules for the following:
        - a) Designated future I/O points contained in the I/O Lists and/or shown on the P&IDs, control schematics, or described in the control strategies.
        - b) Installed spare capacity in accordance with the requirements of this Section.
        - c) Wire all spares provided to the field terminal strip.
    - 6) Condition, filter, and check input signals for instrument limit conditions.
    - 7) Filter, scale, and linearize the raw signal into an engineering-units-based measurement.
    - 8) Alarm measurements for high, low, rate-of-change limits, and alarm trends.
    - 9) Provide external fuses mounted on the field connection terminal block for all discrete input, discrete output, and analog input I/O points.
    - 10) When multiple cards of the same I/O type are provided and parallel equipment, instrumentation, or redundant processes exist, distribute I/O among cards to ensure that a single card failure will not render an entire process unavailable.
- b. Discrete input modules:
    - 1) Defined as contact closure inputs from devices external to the input module.
    - 2) Provide inputs that are optically isolated from low-energy common-mode transients to 1,500 volts peak from users wiring or other I/O modules.
    - 3) Individually isolated inputs.
    - 4) With LEDs to indicate status of each discrete input.
    - 1) Input voltage: 24VDC.
    - 2) Provide input module points that are individually fused with blown-fuse indicator lights, mounted external of the module on the output terminal strip:
        - a) Coordinate external fuse size with the protection located on the module, so that the external fuse opens first under a fault condition.
- c. Discrete output modules:
    - 1) Defined as contact closure outputs for ON/OFF operation of devices external to the output module:
        - a) Triac outputs may be used, with the permission of the Engineer. Care must be used in applying this type of module to ensure that the leakage current through the output device does not falsely signal or indicate an output condition.
    - 2) Optically isolated from inductively generated, normal mode and low-energy common-mode transients to 1,500 volts peak.
    - 3) LEDs to indicate status of each output point.

    4) Relay type dry contacts.
    5) Individually isolated outputs.
  d. Analog input modules:
    1) Signal type: Provide 4-20 mA for most applications; other levels are acceptable to interface to vendor control panels.
    2) Analog-to-digital conversion: Minimum 12-bit precision with the digital result entered into the processor.
    3) The analog-to-digital conversion updated with each scan of the processor.
    4) Individually isolated each input.
    5) Coordinate the size of the external fuse with the protection located on the module, so that the external fuse opens first under a fault condition.
  e. Analog output modules:
    1) Signal type: Provide 4-20 mA for most applications; other levels are acceptable to interface to vendor control panels.
    2) Individual isolated output points each rated for loads of up to 1,200 ohms.
8. Communications modules:
  a. Network communications modules:
    1) General:
      a) Install communications modules in the PLC backplane.
    2) Ethernet:
      a) Ports: 1 RJ-45.
      b) Communication rate: 100 Mbit/s.
      c) Modicon NOE Module.
    3) Provide all network taps, connectors, termination resistors, drop cables, and trunk cables necessary for remote I/O communications.
9. PLC backplane housing:
  a. Mount the PLC power supply, CPU, communications module, and I/O modules in a suitable standard PLC backplane or housing.
  b. Provide spare slots in each PLC and RIO location in accordance with the requirements of this Section.
  c. Provide a blank slot filler module for each spare slot.

B. PLC programming software:
1. Coordinate revision of programming software to be used for this project with the Owner.
2. PLC programming software for all programming, monitoring, searching, and editing:
  a. Usable both on-line, while connected to the PLC, and off-line.
  b. The operating software shall display multiple series and parallel contacts, coils, timers, counters, and mathematical function blocks.
  c. Capable of disabling/forcing all inputs, outputs, and coils to simulate the elements of the ladder logic; forced elements shall be identifiable by means of color change.
  d. Include a search capability to locate any address or element and its program location.
  e. Display at the EC, PLC status information, such as faults and communication errors and amount of memory remaining.
3. The PLC programming software shall support the following programming languages:

        a. Ladder Diagram.
        b. Function Block Diagram.
        c. Structured Text.
4. Generate a PLC program printout, which is fully documented, through the PLC programming software:
    a. Fully documented program listings include, as a minimum, appropriate rungs, address, and coils shown with comments to clarify to a reader what that segment of the program accomplishes on an individual line-by-line basis.
    b. Include a sufficient embedded comment for every rung of the program explaining the control function accomplished in said rung.
    c. Use a mnemonic associated with each contact, coil, etc. that describes its function.
    d. Utilize the tag and loop identification as contained in the P&IDs:
        1) If additional internal coils, timers, etc. are used for a loop, they shall contain the loop number.
    e. Provide a cross-reference report of program addresses.
5. Software functions automatically without operator intervention, except as required to establish file names and similar information:
    a. Furnish the operating system software that is the standard uncorrupted product of the PLC manufacturer with the following minimum functions:
        1) Respond to demands from a program request.
        2) Dynamic allocation of the resources available in the PLC. These resources include main memory usage, computation time, peripheral usage, and I/O channel usage.
        3) Allotment of system resources based on task priority levels such that a logical allocation of resources and suitable response times are ensured.
        4) Queuing of requests in order of priority if one or more requested resources are unavailable.
        5) Resolution of contending requests for the same resource in accordance with priority.
        6) Service requests for execution of one program by another.
        7) Transfer data between programs as requested.
        8) Management of all information transfers to and from peripheral devices.
        9) Control and recovery from all program fault conditions.
        10) Diagnose and report real-time hardware device errors.
6. Program execution:
    a. Application software - program execution scheduled on a priority basis:
        1) A multilevel priority interrupt structure is required.
        2) Enter into a list of pending programs a program interrupted by a higher priority program:
            a) Resume its execution once it becomes the currently highest priority program.
        3) Schedule periodic programs.
        4) Base the allocation of resources to a time-scheduled program on its relative priority and the availability of resources.

7. Start-up and restart:
    a. Provide software that initializes and brings a PLC or any microprocessor-based hardware unit from an inactive condition to a state of operational readiness.
    b. Initialization:
        1) Determination of system status before start-up of initializing operating system software and initializing application software.
        2) Loading of all memory-resident software, initializing timers, counters, and queues, and initialization of all dynamic database values.
8. Shutdown:
    a. Where possible, provide orderly shutdown capability for shutdowns resulting from equipment failure, including other PLC processor failures, primary power failure, or a manually entered shutdown command.
    b. Upon loss of primary power, a high-priority hardware interrupt initiates software for an immediate, orderly shutdown.
    c. Hardware is quickly and automatically commanded to a secure state in response to shutdown command or malfunction.
    d. Alarm PLC failure at the operator interface level.
9. Diagnostics:
    a. Furnish diagnostic programs with the PLC software package to detect and isolate hardware problems and assist maintenance personnel in discovering the causes for system failures.
    b. Use the manufacturer's standard diagnostic routines as much as possible.
    c. Furnish diagnostic software and test programs for each significant component in the control system.
    d. As a minimum, provide diagnostic routines to test for power supply, central processing unit, memory, communications, and I/O bus failures.
10. Calendar/time program:
    a. The calendar/time program to update the second, minute, hour, day, month, and year and transfer accurate time and date information to all system-level and application software.
    b. Variations in the number of days in each month and in leap years must be handled automatically by the program.
    c. The operator must be able to set or correct the time and date from any operator interface, only at the highest security level.
11. Algorithms:
    a. Implementation of algorithms for the determinations of control actions and special calculations involving analog and discrete data.
    b. Algorithms must be capable of outputting positional or incremental control outputs or providing the product of calculations.
    c. Algorithms must include alarm checks where appropriate.
    d. Provide, as a minimum, the following types of algorithms:
        1) Performs functions such as summing several variables, raising to a power, roots, dividing, multiplying, and subtracting.
        2) A switch algorithm, which reads the current and value from its input address and stores it as the value of its output address. 2 types of switches shall be accommodated: 2 outputs with 1 input and 1 output with 2 inputs.
        3) A 3-mode proportional-integral-derivative, PID, controller algorithm, with each of the 3 modes independently adjustable, supports both direct and reverse-acting modes.
        4) Lead, lag, dead time, and ratio compensators.

        5) Integration and totalization of analog process variables.

12. Furnish a comprehensive database for the analog inputs, calculated values, control modules, and outputs:
    a. In addition, provide spare database points for future expansion.
13. One integrated database can be utilized for all types of analog points or separate databases for each type; in either case, the database for each point must include all specified aspects.
14. All portions of the database must be available for use by the display, report, and other specified software modules.
15. All of the data fields and functions specified below must be part of the point definition database at the operator interface. Provide the capability to define new database points through the point display specified below as well as modifying defined points through these displays. This point definition and modification must include all of the features and functions defined below. The analog database software must support the following functions and attributes:
    a. Analog input signal types:
        1) Provide software at the remote terminal units (RTUs) and PLCs to read variable voltage/current signals and pulse duration/frequency type analog input signals.
    b. Input accuracy:
        1) Inputs must be read with an accuracy of within 0.05-percent full-scale or better.
        2) Data conversion errors must be less than 0.05-percent full-scale.
        3) Pulse accumulation error less than or equal to 1 count of actual input count at a scan rate of once per minute.
        4) Maintain for a minimum of 1 year the system accuracy stated above without adjustments.
    c. Blocking:
        1) Provide mechanisms to inhibit or block the scanning and/or processing of any analog input through the operator interface.
        2) For any input so blocked, the operator may manually enter a value to be used as the input value.
    d. Filtering:
        1) For each analog input, provide a first order lag digital filter with an adjustable filter factor.
    e. Linearizing:
        1) Where analog inputs require square root extraction or other linearization, provide a mechanism to condition the filtered data before the process of scaling and zero suppression takes place.
    f. Calculated values:
        1) Provide means to allow for pseudo-inputs calculated by algebraic and/or Boolean expressions utilizing real inputs, other calculated values, constants, etc.
        2) These values must be handled the same as real inputs in terms of record-keeping, alarming, etc.
    g. Scaling and zero suppression:
        1) Provide a conversion program to convert input values into engineering units in a floating-point format.
    h. Alarms:
        1) Provide an alarm program to check all analog variables against high-high, high, low, and low-low alarm limits.

    2) When an analog value exceeds a set limit, it must be reported as an alarm based on individually set priority level for each alarm point.
    3) Provide an adjustable hysteresis band in order to prevent excessive alarms when a variable is hovering around an alarm limit.
    4) Must be possible to inhibit alarms based on external events, e.g., lock-out low pump flow alarm when the pump is off.

i. Averages:
    1) Provide a program to calculate and store hourly, daily, and monthly averages of analog variables.
    2) Continuously compute averages, e.g., the average for the current period to the present point in time must be stored in memory and available for use in displays, etc.
    3) Update hourly averages each minute or at the polling interval for the selected variable.
    4) Update daily averages at least once each hour and calculate using the results of the hourly averages.
    5) Update monthly averages at least once each day and calculate using the results of the daily averages.
    6) At the end of each averaging period, store the average values for the period on the hard disk for historical record-keeping and reset the present period average register to the present value of the variable.
    7) The active database must include the present period average and previous period average for each variable and averaging period.

j. Totals:
    1) Provide a program to calculate and store hourly, daily, and monthly totalization of analog variables.
    2) Assign a scaling factor to each variable to convert to the appropriate units based on a 1-minute totalizing interval.
    3) Assign a separate factor for each totalizing interval.
    4) Variables for which totalization is inappropriate must have scaling factors of zero.
    5) At the end of each totalizing period, store the totalized values for the period on the hard disk for historical record-keeping and reset the present period totalization register to zero.
    6) The active database must include the present period total and previous period total for each variable and totalizing period.

k. Engineering units:
    1) Provide software to allow the system and the operator to convert all the measured analog variables to any desired engineering units.
    2) The operator must be able to view displays and generate reports of any measured variable in one or more engineering units such as flow in gpm, mgd, cfs, and acre-feet per day.
    3) Pre-program the conversion of the engineering units, and, if not pre-programmed, the operator must be able to program new engineering unit conversions by using simple methods, e.g., multiplication of the database attributes by a constant.
    4) The programming method must be at a level and compatible with the specified training of the operator and the Owner's personnel.
    5) New conversions must not require the services of a special programmer and/or special, high-level, programming training.

l. Control modules:

        1) For each control function configured, whether processed at the RTU, PLC, or operator interface, maintain a file of necessary data including input values, setpoints, constants, intermediate calculated values, output value and limit clamps, etc.
        2) Input and output assignments, setpoints, and constants must be adjustable by the operator through the operator interface.
        3) Provide control algorithms for manual control with output values adjustable by the operator.
    m. Analog outputs:
        1) Analog outputs must be maintained as part of the database.
        2) These outputs must be adjustable manually by the operator through the operator interface or through automatic control algorithms.
16. Some of the above functions may be better accomplished in the data acquisition and graphic display software package; it is the responsibility of the ICSC to optimize the location of the various functions between all software packages.

C. General control functions:
1. Analog control functions:
    a. PID, lead/lag, signal select, alarm, limit, delay, and time base.
    b. Furnish the control system complete with a library of mathematical/calculation software to support averaging, weighted average, addition, subtraction, multiplication, division, square root extraction, exponential, AND, OR, NAND, NOR, XOR, and NXOR functions.
    c. All math utilities must be linkable to process data points or manual inputs via control block configuration.
    d. By linking control blocks to data points, the math library must support system unit conversion and calculation requirements.
2. Discrete control functions:
    a. AND, OR, NOT, EXCLUSIVE OR, comparators, delays, and time base.
3. Software support:
    a. Retain in firmware all control and logic functions at each RTU and PLC and in RAM at the operator interface.
    b. Call each function as required by the configured controls to perform the intended function.
4. Control and status discrepancies:
    a. Generate a discrepancy/fail alarm for any pump, valve, or final control element if a discrepancy exists between a system or operator command and the device status.
        1) For example, the system commands to start (call), and the pump fails to start (run status report back), within predetermined operator-programmable time delay (time disagree), then a discrepancy (fail) alarm shall be generated.
    b. Involuntary change in the device's status must also generate an alarm:
        1) For example, a pump starts when not commanded to do so, or a pump shuts down while running even though it still has a command to run.
    c. Each command, status, and alarm must cause the color of the symbol to change.

        d. Because many discrete final control elements have a cycle time in excess of the scan interval, provide each control output with an associated delay period selected to be longer than the operating period of the control element:
            1) Delay periods for each final control element must be adjustable at the operator interface.
            2) List all time delays in the final documentation.
    5. Some of the above functions may be better accomplished in the data acquisition and graphic display software package; it is the responsibility of the ICSC to optimize the location of the various functions between all software packages.

D. Control configuration:
    1. Provide software to allow control strategies to be developed, and their operation initiated through the operator interface.
    2. Provide standardized control point displays for defining the control functions including the function type, input/output addresses, setpoints, tuning constants, etc.
    3. Provide a mechanism to link separate control functions together into an integrated control strategy.
    4. Provide a mechanism to download operational/control setpoints developed at any operator interface to any PLC or RTU for operational implementation.
    5. Provide a mechanism to define and implement operational/control setpoints locally at the PLC or RTU, and to upload them to the operator interface for operational record-keeping.
    6. Perform control configurations on-line at the operator interface; the PLC or RTU may be taken off-line when being configured or downloaded.

E. Remote inputs and outputs (RIOs):
    1. Compatible with all of the PLCs being furnished under this Contract, shall be by the same manufacturer as the PLCs, and, as a minimum, include:
        a. Power supply.
        b. Rack.
        c. Backplane.
        d. Communications module.
        e. I/O modules.
        f. Enclosure.
    2. Provide all cables and software needed for a complete and operational RIO system as specified in the Contract Documents.
    3. Provide a group of pre-assigned diagnostic registers to report RIO system faults to the driver PLC.
    4. The control system must continue operation should a fault occur on a single RIO drop:
        a. Upon clearing the fault, restart communications to that drop automatically.

2.05 EQUIPMENT (NOT USED)

2.06 COMPONENTS (NOT USED)

2.07 ACCESSORIES (NOT USED)

2.08 MIXES (NOT USED)

2.09 FABRICATION (NOT USED)

2.10 FINISHES (NOT USED)

2.11 SOURCE QUALITY CONTROL

A. As specified in Section 17050 - Common Work Results for Process Control and Instrumentation Systems.

PART 3 EXECUTION

3.01 EXAMINATION (NOT USED)

3.02 PREPARATION (NOT USED)

3.03 INSTALLATION

A. As specified in Section 17050 - Common Work Results for Process Control and Instrumentation Systems.

B. Utilize personnel to accomplish or supervise the physical installation of all elements, components, accessories, or assemblies:
   1. Employ installers who are skilled and experienced in the installation and connection of all elements, components, accessories, and assemblies.

C. All components of the control system including all data network cables are the installation responsibility of the ICSC unless specifically noted otherwise.

D. General:
   1. The control system logic program shall reside at the PLC level.

E. Use the tag and loop identifications found on the P&IDs for all tags used and/or assigned as part of the application software work provided by the ICSC.

3.04 ERECTION, INSTALLATION, APPLICATION, CONSTRUCTION

A. Provide a minimum of 4 CD/DVD copies of the following:
   1. Application software:
      a. Finalized fully annotated copy of programmed PLC logic in its native format.
      b. Cross-referenced index of all PLC registers or points.

3.05 REPAIR/RESTORATION (NOT USED)

3.06 RE-INSTALLATION (NOT USED)

3.07 FIELD QUALITY CONTROL

A. As specified in Section 17050 - Common Work Results for Process Control and Instrumentation Systems.

3.08 ADJUSTING (NOT USED)

3.09 CLEANING

A. As specified in Section 17050 - Common Work Results for Process Control and Instrumentation Systems.

3.10 DEMONSTRATION AND TRAINING

A. As specified in Section 17050 - Common Work Results for Process Control and Instrumentation Systems.

B. Tailor training specifically for this Project that reflects the entire control system installation and configuration.

C. Perform training by pre-approved and qualified representatives of the ICSC and/or manufacturer of the PLC hardware and programming software:
  1. A representative of the ICSC may perform the PLC hardware training only if the representative has completed the manufacturer’s training course for the PLC hardware.
  2. A representative of the ICSC may perform the PLC programming software training only if the representative has completed the manufacturer’s training course for the PLC programming software.

3.11 PROTECTION

A. As specified in Section 17050 - Common Work Results for Process Control and Instrumentation Systems.

3.12 SCHEDULES (NOT USED)

END OF SECTION

SECTION 17730

CONTROL SYSTEMS: PCS COMPUTER EQUIPMENT

PART 1 GENERAL

1.01 SUMMARY

A. Section includes:
   1. PC-based PCS system hardware, including:
      a. PCS Servers.
      b. Thin Client Workstations.
      c. Thin Client UPS.
      d. Rackm

1.02 REFERENCES

A. As specified in Section 17050 - Common Work Results for Process Control and Instrumentation Systems.

1.03 DEFINITIONS

A. As specified in Section 17050 - Common Work Results for Process Control and Instrumentation Systems.

B. Specific definitions:
   1. CAL: Client access license.
   2. RAID: Redundant array of independent disks.
   3. SNMP: Simple network management protocol.

1.04 SYSTEM DESCRIPTION

A. Provide all PCS computer equipment identified in the Contract Documents.

B. Miscellaneous requirements:
   1. All material used in satisfying the equipment requirements shall be new and unused and must be actively marketed by the original equipment manufacturer for new applications at the time of the factory demonstration test. The Contractor shall not use equipment destined for installation or spare parts for the Owner’s system for any reason other than development and testing of the system.

1.05 SUBMITTALS

A. Furnish submittals as specified in Sections 01330 - Submittal Procedures and 17050 - Common Work Results for Process Control and Instrumentation Systems.

1.06 QUALITY ASSURANCE

A. As specified in Section 17050 - Common Work Results for Process Control and Instrumentation Systems.

1.07 DELIVERY, STORAGE, AND HANDLING

A. As specified in Section 17050 - Common Work Results for Process Control and Instrumentation Systems.

1.08 PROJECT OR SITE CONDITIONS

A. As specified in Section 17050 - Common Work Results for Process Control and Instrumentation Systems.

1.09 SEQUENCING (NOT USED)

1.10 SCHEDULING (NOT USED)

1.11 WARRANTY

A. As specified in Section 17050 - Common Work Results for Process Control and Instrumentation Systems.

1.12 SYSTEM START-UP (NOT USED)

1.13 OWNER'S INSTRUCTIONS (NOT USED)

1.14 COMMISSIONING (NOT USED)

1.15 MAINTENANCE

A. Servers:
   1. Provide a 3-year on-site manufacturer’s service plan, with 2-year unlimited phone support.

PART 2 PRODUCTS

2.01 MANUFACTURERS

A. Commonality:
   1. The PCS system shall utilize the same brand and type of computer for like functions throughout the system.
   2. Where possible, use the same processor family throughout.

B. Manufacturers:
   1. As indicated below.

C. Systems management architecture:
   1. All processors, servers, workstations, network software, bridges, and other manageable objects shall have simple network management protocol (SNMP) agents included.

2.02 EXISTING PRODUCTS (NOT USED)

2.03 MATERIALS (NOT USED)

2.04 MANUFACTURED UNITS

A. General:
   1. The hardware identified in this Section is considered the minimum, acceptable configuration. It is the Contractor's responsibility to upgrade and expand the hardware configuration if necessary to satisfy software and system performance requirements of the Project.
   2. Proposed substitutions must meet or exceed the specifications of the equipment listed.

B. SCADA Servers:
   1. General:
      a. PCS workstations: Intel-based, server-class PCs. Coordinate with Owner for VMware and Operating system licensing and installation images.
   2. The PCS servers shall meet the following minimum requirements:
      a. Manufacturers:
         1) Dell, PowerEdge R740 series.
      b. Form factor: Rackmount Server.
      c. Processor: 1 Socket.
      d. Processor speed: Intel Xeon Silver 2.1G, 16C/32T, 9.6GT/s, minimum.
      e. Cache: 22-MB, minimum.
      f. Main memory: 2x32-GB.
      g. Hard disk(s): RAID 1 configuration, Solid State Hard Drive, 960GB each.
      h. Hard disk quantity: 2.
      i. Network cards: Two 1-port each 100/1000-Base-T, minimum.
      j. 4 USB ports, Type USB 3.1 and USB-C.
      k. Power supply: Redundant 120Vac.
   3. Applicable equipment:
      a. SCADA servers.

C. Workstations (Thin Client):
   1. Manufacturers: The following or equal:
      a. Dell, Wyse 5000 Series.
   2. General:
      a. General purpose, PC-architecture thin computers. Operating system shall be coordinated with the Owner.
      b. Thin workstations for connection to remote Citrix server.
         1) Configure county-wide client for connection to the SCADA Citrix server.
         2) Configure local SCADA clients for connectivity to local server virtual machines.
         3) Coordinate configuration requirements for thin clients with the Owner.
      c. Form factor: Mini.
      d. Processor speed: Dual Core, 1.0 GHz or better.
      e. Memory: 4-GB DDR3 SDRAM.
      f. Flash memory: 4 GB.
      g. Network card: 10/100/1000-Base-TX.
      h. Ports:
         1) 4 USB 2.0.
         2) 1 RJ-45.
         3) 2 DVI or DisplayPort.
      i. Mouse: Optical, wheel-type, 3-button (count wheel click as 1 button).

        - j. Keyboard: Windows 104-key.
        - k. Color: Black.
        - l. Monitors: 2 LCD Monitors.
    - 3. Applicable equipment:
        - a. Thin Client Workstations.

- D. LCD monitors:
    - 1. LCD workstation monitors shall meet the following minimum requirements:
        - a. LCD manufacturers: The following or equal:
            - 1) Dell, UltraSharp Series.
        - b. Viewing area: 24 inches.
        - c. Aspect ratio: 16:9.
        - d. Pixel pitch: 0.294 millimeter.
        - e. Resolution: 1920 x 1200, minimum, 16 million colors.
        - f. Interface: HDMI, DisplayPort, and VGA.
        - g. Type: TFT active matrix.
        - h. Viewing angle: Within 80 degrees, horizontal and vertical.
        - i. Contrast ratio: 800:1, native.
        - j. Pixel format: True SXCA with support for VGA, SVGA, and XGA.
        - k. Full screen image at all resolutions.
        - l. Glass surface: RGB stripe, anti-glare hard coat screen.
        - m. Mounting: Provide hardware for desktop mounting.
        - n. Provide two monitors for each workstation and thin client.

- E. Card reader:
    - 1. Manufacturers: The following or equal:
        - a. RFIDeas, pcProx Plus.
    - 2. General:
        - a. Card frequencies: 125 kHz or 13.56 MHz.
        - b. Compatible with Microsoft Windows 10.
        - c. Signal connection: USB.
        - d. Power: Through USB.
        - e. Current consumption: 100 mA maximum.
        - f. Operating temperature: -22 to 150 degrees Fahrenheit.
        - g. Operating humidity: 5 to 95 percent.
        - h. Mounting:
            - 1) PCM: Surface mount.
            - 2) Workstation/Client: Desktop.
        - i. Provide for each SCADA server.

2.05 EQUIPMENT (NOT USED)

2.06 COMPONENTS (NOT USED)

2.07 ACCESSORIES

- A. Uninterruptible power supply (UPS).
    - 1. Thin Client Workstation UPS:
        - a. Provide a separate local UPS for each Thin Client Workstation to power thin client and associated monitors.
        - b. Size as required for the system load.

        c. As specified in Section 17712 - Control Systems: Uninterruptible Power Supplies 10 KVA and Below for UPS requirements.

2.08 MIXES (NOT USED)

2.09 FABRICATION (NOT USED)

2.10 FINISHES (NOT USED)

2.11 SOURCE QUALITY CONTROL (NOT USED)

PART 3 EXECUTION

3.01 EXAMINATION (NOT USED)

3.02 PREPARATION (NOT USED)

3.03 INSTALLATION

A. As specified in Section 17050 - Common Work Results for Process Control and Instrumentation Systems.

B. General:
  1. Each display monitor shall be secured to the console or other work surface.
  2. Install equipment and cabling to provide appropriate slack in cables. Restrain cabling with Velcro cable ties.

3.04 ERECTION, INSTALLATION, APPLICATION, CONSTRUCTION (NOT USED)

3.05 REPAIR/RESTORATION (NOT USED)

3.06 RE-INSTALLATION (NOT USED)

3.07 FIELD QUALITY CONTROL

A. As specified in Section 17950 - Testing, Calibration, and Commissioning.

3.08 ADJUSTING (NOT USED)

3.09 CLEANING

A. As specified in Section 17050 - Common Work Results for Process Control and Instrumentation Systems.

3.10 DEMONSTRATION AND TRAINING

A. As specified in Section 17050 - Common Work Results for Process Control and Instrumentation Systems.

B. Training:
  1. As specified in Section 17050 - Common Work Results for Process Control and Instrumentation Systems.

3.11 PROTECTION (NOT USED)

3.12 SCHEDULES (NOT USED)

END OF SECTION

SECTION 17733

CONTROL SYSTEMS: NETWORK MATERIALS AND EQUIPMENT

PART 1 GENERAL

1.01 SUMMARY

A. Section includes:
  1. Materials and equipment used in process control and LAN networks including:
    a. Network switches.
    b. Media converters.
    c. Patch panels and other data network hardware.
    d. Server Racks
    e. Related accessories.

1.02 REFERENCES

A. As specified in Section 17050 - Common Work Results for Process Control and Instrumentation Systems.

B. Institute of Electrical and Electronics Engineers (IEEE):
  1. 802.3 - Ethernet.
  2. 802.11 - Wireless LANs.

1.03 DEFINITIONS

A. As specified in Section 17050 - Common Work Results for Process Control and Instrumentation Systems.

1.04 SYSTEM DESCRIPTION

A. Provide all network equipment identified in the Contract Documents.

1.05 SUBMITTALS

A. Furnish submittals as specified in Sections 01330 - Submittal Procedures and 17050 - Common Work Results for Process Control and Instrumentation Systems.

B. Product data:
  1. Include information on all network equipment.
  2. Manufacturer’s operation and installation instructions.

C. Shop drawings:
  1. Complete set of drawings including but not limited to:
    a. System block diagram showing relationship and connections between devices provided under this Contract. Include manufacturer and model information, and address settings.
    b. Network riser diagram.
    c. Network port diagram, which physically locates all ports within the facility, and identifies their patch panel and switch port.

        d. Construction drawings for all equipment cabinets, including dimensions, identification of all components, preparation and finish data, and nameplates.
        e. Electrical connection diagrams.
        f. Complete grounding requirements.
    2. Furnish data sheets for each component together with a technical product brochure or bulletin:
        a. Manufacturer's model number.
        b. Project equipment tag.
    3. Complete and detailed bills of materials broken up by each cabinet. Each bill of material item will include the following:
        a. Quantity.
        b. Description.
        c. Manufacturer.
        d. Part numbers.

D. Test reports:
    1. As specified in Section 17950 - Testing, Calibration, and Commissioning and noted in this Section.
    2. Signed test results as described in this Section.
    3. Test results shall include:
        a. Narrative describing the test procedures followed.
        b. Block diagram of test set up.
        c. Manufacturer’s information on test equipment used.
        d. Detailed test results.
        e. A narrative summarizing the results of the testing and identifying any further action required.

E. Operating manuals:
    1. Complete installation, operation, calibration, and testing manuals as specified in Section 17050 - Common Work Results for Process Control and Instrumentation Systems.

F. Record drawings:
    1. As specified in Section 17050 - Common Work Results for Process Control and Instrumentation Systems.
    2. Electrical connection diagrams shall be revised to reflect any changes made in the field and submitted as record drawings.

1.06 QUALITY ASSURANCE

A. As specified in Section 17050 - Common Work Results for Process Control and Instrumentation Systems.

1.07 DELIVERY, STORAGE, AND HANDLING

A. As specified in Section 17050 - Common Work Results for Process Control and Instrumentation Systems.

1.08 PROJECT OR SITE CONDITIONS

A. As specified in Section 17050 - Common Work Results for Process Control and Instrumentation Systems.

1.09 SEQUENCING (NOT USED)

1.10 SCHEDULING (NOT USED)

1.11 WARRANTY

A. As specified in Section 17050 - Common Work Results for Process Control and Instrumentation Systems.

1.12 SYSTEM START-UP (NOT USED)

1.13 OWNER'S INSTRUCTIONS (NOT USED)

1.14 COMMISSIONING (NOT USED)

1.15 MAINTENANCE (NOT USED)

PART 2 PRODUCTS

2.01 MANUFACTURERS (NOT USED)

2.02 EXISTING PRODUCTS (NOT USED)

2.03 MATERIALS (NOT USED)

2.04 MANUFACTURED UNITS

A. Ethernet switches:
  1. Managed Process Floor Ethernet switches:
    a. Manufacturers: One of the following, no equal:
      1) Red Lion, N-Tron, 700.
      2) Hirschmann, RS40.
      3) Cisco, IE 3000.
    b. Properties:
      1) Hardware:
        a) Power supply:
          (1) Provide redundant power supplies.
          (2) 24 VDC, 170 watts per power supply.
        b) No fans or moving parts.
      2) Performance:
        a) Enclosure:
          (1) All metal housing.
          (2) 15g Shock for 11ms minimum.
        b) 10/100BASE-TX RJ-45 Copper Ports (quantity as indicated on the Drawings).
        c) 100BASE-FX SC Ports (quantity as indicated on the Drawings).
        d) Capable of performing basic switching without special programming or configurations. Additional features available through software setup includes but not limited to:
          (1) SNMP.
          (2) VLAN.
          (3) QoS.

            - (4) Port Mirroring.
            - (5) DHCP Server
          - e) IGMP Snooping.
          - f) 802.1d, 802.1w, 802.1D RSTP.
        - 3) Environment:
          - a) Operating temperature range: 32 to 140 Degrees Fahrenheit.
          - b) Humidity:10 to 95 percent, non-condensing.
        - 4) Connector type:
          - a) SFP or Fiber:
            - (1) Minimum of 2-SFP or 2-SC multimode fiber.
          - b) Copper: RJ-45:
            - (1) Quantity of copper and fiber ports as required to provide connections as indicated on the Drawings: As required to provide the number of connections required plus 20 percent spare ports of each type used.
        - 5) Mounting:
          - a) DIN Rail mounting.

- B. Network Racks
  - 1. Server closed 4-post cabinets:
    - a. Manufacturers: One of the following or equal:
      - 1) Dell.
      - 2) Hoffman.
      - 3) Panduit.
    - b. Properties:
      - 1) Louvered front door, lockable.
      - 2) Louvered rear door, lockable.
      - 3) Vertical Power strips for UPS and Non-UPS power distribution.
      - 4) Furnish shelves as needed.
      - 5) Furnish cable keeper/organizer, horizontal and vertical.
      - 6) NEMA 1.

2.05 EQUIPMENT (NOT USED)

2.06 COMPONENTS (NOT USED)

2.07 ACCESSORIES

A. Provide duplex patch cords to connect the interface cards provided with the associated patch panels.

B. Furnish accessories as specified in Section 17730 - Control Systems: PCS Computer Equipment.

2.08 MIXES (NOT USED)

2.09 FABRICATION (NOT USED)

2.10 FINISHES (NOT USED)

2.11 SOURCE QUALITY CONTROL (NOT USED)

PART 3 EXECUTION

3.01 EXAMINATION (NOT USED)

3.02 PREPARATION (NOT USED)

3.03 INSTALLATION

A. As specified in Section 17050 - Common Work Results for Process Control and Instrumentation Systems.

B. Provide installation for the new managed Ethernet switches. Owner will provide configuration of Ethernet switches. Provide switches to Owner prior to installation for configuration. Provide Ethernet switch network for a complete, functioning plant control system as indicated on the Drawings and as specified in this Section:
   1. Refer to SCADA block diagrams for all network connections.
   2. Provide configuration for all Ethernet connected devices in accordance with the Owner's direction. Owner will provide all Ethernet addresses for equipment.

C. All racks shall be level and plumb.

D. Install Velcro wrap on all cable bundles within the network rack/enclosure.

E. All cables and equipment shall be installed in strict conformance with the manufacturer's recommendations:
   1. Cables shall be installed avoiding sharp bends.
   2. Install cable using lubricant designed for cable pulling.
   3. Cable ties or other cable supports shall be installed without crimping the LAN cables.
   4. Install LAN cables without splices.
   5. Installed bend radii shall not exceed 4 times the cable diameter.
   6. Terminated all pairs at the jack and the patch panel.

F. Install cables a minimum of 40 inches away from electrical motors and transformers.

G. Install cables a minimum of 12 inches away from fluorescent lighting.

H. Individual pairs will be untwisted less than 1/2-inch at termination points.

I. All cables and terminations shall be labeled with cable designations as specified in Section 16075 - Identification for Electrical Systems.

J. At the completion of the wiring installation, provide the following documentation:
   1. A plan-view of the premise(s) showing the jack numbering scheme.
   2. A printed certification report for the entire wiring installation showing compliance with all EIA/TIA specifications for data cable.
   3. Reports such as those generated by Fluke DSP cable certification equipment meet this requirement.

3.04 ERECTION, INSTALLATION, APPLICATION, CONSTRUCTION (NOT USED)

3.05 REPAIR/RESTORATION (NOT USED)

3.06 RE-INSTALLATION (NOT USED)

3.07 FIELD QUALITY CONTROL (NOT USED)

3.08 ADJUSTING

A. Perform all firmware installations, configuration and other set up, as required, to place the network into proper operation. Coordinate all requirements and changes with the Owner for Ethernet connected equipment.

3.09 CLEANING

A. As specified in Section 17050 - Common Work Results for Process Control and Instrumentation Systems.

3.10 DEMONSTRATION AND TRAINING

A. As specified in Section 17050 - Common Work Results for Process Control and Instrumentation Systems.

B. After completion of the cable system tests and before placing the system in operation, power up all devices installed on the LAN and verify communication between the devices.

C. Verify that all equipment is operable on the network simultaneously. Confirm that all network device communications settings are properly configured.

3.11 PROTECTION (NOT USED)

3.12 SCHEDULES (NOT USED)

END OF SECTION

SECTION 17903

SCHEDULES: I/O LIST

PART 1 GENERAL

1.01 SUMMARY

A. The I/O list is not a take-off list. Additional information is as indicated on the Drawings and specified in the Contract Documents. Where any discrepancies between this list and the P&ID drawings arise, the P&ID shall govern.

B. Abbreviations used in the I/O list are defined on the Drawings.

PART 2 PRODUCTS

Not Used.

PART 3 EXECUTION

3.01 I/O LIST

A. I/O list attached.

END OF SECTION

THIS PAGE INTENTIONALLY LEFT BLANK

Engineers...Working Wonders With Water™

PLC I/O Listing for PCM-1-1

Drawing	Function	Loop	I/O	Location	Description	Service	(E/F)
9621C1090N001.DWG	ATS	91-1	MBTCP	PCM-1-1		AUTOMATIC TRANSFER SWITCH	
9621C1090N001.DWG	ATS	91-1	MBTCP	PCM-1-1		ENGINE CONTROL PANEL	
9621C1090N001.DWG	PQM	91-1	MBTCP	PCM-1-1		POWER QUALITY METER	
PCM-1-1	**Total MBTCP Points = 3**						

PLC I/O Listing for PCM-2-1

Drawing	Function	Loop	I/O	Location	Description	Service	(E/F)
9621C1092N001.DWG	PQM	92-1	MBTCP	PCM-2-1		POWER QUALITY METER	
PCM-2-1	**Total MBTCP Points = 1**						

PLC I/O Listing for PCM-3-1

Drawing	Function	Loop	I/O	Location	Description	Service	(E/F)
9621C1091N001.DWG	ATS	93-1	MBTCP	PCM-3-1		ENGINE CONTROL PANEL	
9621C1091N001.DWG	ATS	93-1	MBTCP	PCM-3-1		AUTOMATIC TRANSFER SWITCH	
9621C1091N001.DWG	PQM	93-1	MBTCP	PCM-3-1		POWER QUALITY METER	
PCM-3-1	**Total MBTCP Points = 3**						

PLC I/O Listing for PLC-1-1

Drawing	Function	Loop	I/O	Location	Description	Service	(E/F)
9621C1010N001.DWG	F	10-1	AI	PLC-1-1	FLOW	FLOW METER	
9621C1010N001.DWG	L	10-1	AI	PLC-1-1	LEVEL	LEVEL TRANSMITTER	
9621C1090N002.DWG	T	1-1	AI	PLC-1-1	TEMP	TEMPERATURE TRANSMITTER	
9621C1090N002.DWG	T	1-1	AI	PLC-1-1	PLC TEMP	PROCESS CONTROL MODULE - CONTROL PANEL	
9621C1040N001.DWG	F	40-1	AI	PLC-1-1	FLOW	FLOW METER	
9621C1040N001.DWG	F1	40-1	AI	PLC-1-1	FLOW	PRESSURE CONTROL VALVE 1	
9621C1040N001.DWG	P	40-1	AI	PLC-1-1	PRESSURE	PRESSURE CONTROL VALVE 1	
9621C1040N001.DWG	Z	40-1	AI	PLC-1-1	POSITION	PRESSURE CONTROL VALVE 1	
9621C1040N001.DWG	L	42-1	AI	PLC-1-1	LEVEL	LEVEL PRESSURE DIFFERENTIAL TRANSMITTER	
9621C1040N001.DWG	L	42-2	AI	PLC-1-1	LEVEL	LEVEL PRESSURE DIFFERENTIAL TRANSMITTER	
9621C1040N001.DWG	A	50-1	AI	PLC-1-1	CL	CHLORINE RESIDUAL	
9621C1040N001.DWG	T	50-1	AI	PLC-1-1	TEMP	TEMPERATURE TRANSMITTER	
9621C1040N001.DWG	A	50-2	AI	PLC-1-1	pH	pH	
9621C1050N001.DWG	SB	52-1	AI	PLC-1-1	SPEED IN	JOCKEY PUMP 1	
9621C1050N002.DWG	SB	54-1	AI	PLC-1-1	SPEED IN	HIGH SERVICE PUMP 1	
9621C1050N003.DWG	SB	54-3	AI	PLC-1-1	SPEED IN	HIGH SERVICE PUMP 3	
9621C1070N001.DWG	A	70-1	AI	PLC-1-1	CL	CHLORINE RESIDUAL	
9621C1070N001.DWG	F	70-1	AI	PLC-1-1	FLOW	FLOW METER	
9621C1070N001.DWG	P	70-1	AI	PLC-1-1	PRESSURE	PRESSURE TRANSMITTER	
9621C1070N001.DWG	A	70-2	AI	PLC-1-1	pH	pH	
9621C1080N001.DWG	L	80-1	AI	PLC-1-1	LEVEL	CHEMICAL TANK NO. 1 LEVEL TRANS	
9621C1090N001.DWG	J2	91-1	AI	PLC-1-1	KW ENG	ENGINE CONTROL PANEL	
9621C1090N001.DWG	K	91-1	AI	PLC-1-1	FREQ ENG	ENGINE CONTROL PANEL	
PLC-1-1	**Total AI Points = 23**						

PLC I/O Listing for PLC-1-1

Drawing	Function	Loop	I/O	Location	Description	Service	(E/F)
9621C1040N001.DWG	FI	40-1	AO	PLC-1-1	FLOW SP	PRESSURE CONTROL VALVE 1	
9621C1050N001.DWG	SS	52-1	AO	PLC-1-1	SPEED OUT	JOCKEY PUMP 1	
9621C1050N002.DWG	SS	54-1	AO	PLC-1-1	SPEED OUT	HIGH SERVICE PUMP 1	
9621C1050N003.DWG	SS	54-3	AO	PLC-1-1	SPEED OUT	HIGH SERVICE PUMP 3	
9621C1080N001.DWG	LY	80-1	AO	PLC-1-1	LEVEL IND	CHEMICAL TANK NO. 1 LEVEL TRANS	
9621C1080N002.DWG	SS	81-1	AO	PLC-1-1	SPEED OUT	SODIUM HYPOCHLORITE PUMP 1	
9621C1080N003.DWG	SS	81-3	AO	PLC-1-1	SPEED OUT	SODIUM HYPOCHLORITE PUMP 3	
PLC-1-1	**Total AO Points = 7**						

PLC I/O Listing for PLC-1-1

Drawing	Function	Loop	I/O	Location	Description	Service	(E/F)
9621C1010N001.DWG	AUX1	10-1	DI	PLC-1-1	RUNNING	WELL PUMP 1	
9621C1010N001.DWG	HSDA	10-1	DI	PLC-1-1	AUTO	WELL PUMP 1	
9621C1010N001.DWG	PSH	10-1	DI	PLC-1-1	PRESS HI	PRESSURE SWITCH HIGH	
9621C1010N001.DWG	PSL	10-1	DI	PLC-1-1	PRESS LOW	PRESSURE SWITCH LOW	
9621C1010N001.DWG	TSH	10-1	DI	PLC-1-1	TEMP HI	WELL PUMP 1	
9621C1090N002.DWG	JS1	1-1	DI	PLC-1-1	PWR SUP OK	PROCESS CONTROL MODULE - CONTROL PANEL	
9621C1090N002.DWG	XA8	1-1	DI	PLC-1-1	SPD FAIL	PCM SURGE PROTECTOR	
9621C1090N002.DWG	ZS	1-1	DI	PLC-1-1	INTRUSION	PROCESS CONTROL MODULE - CONTROL PANEL	
9621C1090N002.DWG	ZS	1-1	DI	PLC-1-1	INTRUSION	PROCESS CONTROL MODULE - CONTROL PANEL	
9621C1090N002.DWG	ZS	1-1	DI	PLC-1-1	INTRUSION	PROCESS CONTROL MODULE - CONTROL PANEL	
9621C1090N002.DWG	AUX1	1-2	DI	PLC-1-1	ON UPS POWER	UPS POWER STATUS	
9621C1090N002.DWG	XA3	1-2	DI	PLC-1-1	LO BATT	UPS POWER STATUS	
9621C1090N002.DWG	XA4	1-2	DI	PLC-1-1	UPS FAIL	UPS POWER STATUS	
9621C1040N001.DWG	FSL	40-2	DI	PLC-1-1	FLOW LOW	THERMAL LOW FLOW SWITCH	
9621C1040N001.DWG	FSH	42-1	DI	PLC-1-1	FLOW HI	FLOW SWITCH HIGH	
9621C1050N001.DWG	AUX1	52-1	DI	PLC-1-1	RUNNING	JOCKEY PUMP 1	
9621C1050N001.DWG	AUX11	52-1	DI	PLC-1-1	VFD POWER ON	JOCKEY PUMP 1	
9621C1050N001.DWG	AUX2	52-1	DI	PLC-1-1	FAILED	JOCKEY PUMP 1	
9621C1050N001.DWG	AUX3	52-1	DI	PLC-1-1	READY	JOCKEY PUMP 1	
9621C1050N001.DWG	HSDA1	52-1	DI	PLC-1-1	AUTO	JOCKEY PUMP 1	
9621C1050N001.DWG	HSDA2	52-1	DI	PLC-1-1	VFD POWER AUTO	JOCKEY PUMP 1	
9621C1050N001.DWG	PSH	52-1	DI	PLC-1-1	PRESS HI	PRESSURE SWITCH HIGH	
9621C1050N001.DWG	PSL	52-1	DI	PLC-1-1	PRESS LOW	PRESSURE SWITCH LOW	
9621C1050N001.DWG	TSH	52-1	DI	PLC-1-1	TEMP HI	JOCKEY PUMP 1	
9621C1050N001.DWG	AUX3	52-2	DI	PLC-1-1	READY	JOCKEY PUMP 2	
9621C1050N002.DWG	AUX1	54-1	DI	PLC-1-1	RUNNING	HIGH SERVICE PUMP 1	
9621C1050N002.DWG	AUX11	54-1	DI	PLC-1-1	VFD POWER ON	HIGH SERVICE PUMP 1	
9621C1050N002.DWG	AUX2	54-1	DI	PLC-1-1	FAILED	HIGH SERVICE PUMP 1	

PLC I/O Listing for PLC-1-1

Drawing	Function	Loop	I/O	Location	Description	Service	(E/F)
9621C1050N002.DWG	AUX3	54-1	DI	PLC-1-1	READY	HIGH SERVICE PUMP 1	
9621C1050N002.DWG	HSDA1	54-1	DI	PLC-1-1	AUTO	HIGH SERVICE PUMP 1	
9621C1050N002.DWG	HSDA2	54-1	DI	PLC-1-1	VFD POWER AUTO	HIGH SERVICE PUMP 1	
9621C1050N002.DWG	PSH	54-1	DI	PLC-1-1	PRESS HI	PRESSURE SWITCH HIGH	
9621C1050N002.DWG	PSL	54-1	DI	PLC-1-1	PRESS LOW	PRESSURE SWITCH LOW	
9621C1050N002.DWG	TSH	54-1	DI	PLC-1-1	TEMP HI	HIGH SERVICE PUMP 1	
9621C1050N002.DWG	AUX3	54-2	DI	PLC-1-1	READY	HIGH SERVICE PUMP 2	
9621C1050N003.DWG	AUX1	54-3	DI	PLC-1-1	RUNNING	HIGH SERVICE PUMP 3	
9621C1050N003.DWG	AUX11	54-3	DI	PLC-1-1	VFD POWER ON	HIGH SERVICE PUMP 3	
9621C1050N003.DWG	AUX2	54-3	DI	PLC-1-1	FAILED	HIGH SERVICE PUMP 3	
9621C1050N003.DWG	AUX3	54-3	DI	PLC-1-1	READY	HIGH SERVICE PUMP 3	
9621C1050N003.DWG	HSDA1	54-3	DI	PLC-1-1	AUTO	HIGH SERVICE PUMP 3	
9621C1050N003.DWG	HSDA2	54-3	DI	PLC-1-1	VFD POWER AUTO	HIGH SERVICE PUMP 3	
9621C1050N003.DWG	PSH	54-3	DI	PLC-1-1	PRESS HI	PRESSURE SWITCH HIGH	
9621C1050N003.DWG	PSL	54-3	DI	PLC-1-1	PRESS LOW	PRESSURE SWITCH LOW	
9621C1050N003.DWG	TSH	54-3	DI	PLC-1-1	TEMP HI	HIGH SERVICE PUMP 3	
9621C1070N001.DWG	XI	70-1	DI	PLC-1-1	FLOW DIRECTION	FLOW METER	
9621C1080N001.DWG	FSH	80-1	DI	PLC-1-1	FLOW HI	FLOW SWITCH HIGH	
9621C1080N001.DWG	LSH	80-1	DI	PLC-1-1	LEVEL HI	CHEMICAL CONTAINMENT LEVEL HIGH	
9621C1080N001.DWG	FSH	80-2	DI	PLC-1-1	FLOW HI	FLOW SWITCH HIGH	
9621C1080N002.DWG	AUX1	81-1	DI	PLC-1-1	RUNNING	SODIUM HYPOCHLORITE PUMP 1	
9621C1080N002.DWG	AUX2	81-1	DI	PLC-1-1	FAILED	SODIUM HYPOCHLORITE PUMP 1	
9621C1080N002.DWG	HSDA	81-1	DI	PLC-1-1	AUTO	SODIUM HYPOCHLORITE PUMP 1	
9621C1080N003.DWG	AUX1	81-3	DI	PLC-1-1	RUNNING	SODIUM HYPOCHLORITE PUMP 3	
9621C1080N003.DWG	AUX2	81-3	DI	PLC-1-1	FAILED	SODIUM HYPOCHLORITE PUMP 3	
9621C1080N003.DWG	HSDA	81-3	DI	PLC-1-1	AUTO	SODIUM HYPOCHLORITE PUMP 3	
9621C1090N001.DWG	AUX1	91-1	DI	PLC-1-1	RUNNING ENG	ENGINE CONTROL PANEL	
9621C1090N001.DWG	AUX10	91-1	DI	PLC-1-1	GEN POS	AUTOMATIC TRANSFER SWITCH	

PLC I/O Listing for PLC-1-1

Drawing	Function	Loop	I/O	Location	Description	Service	(E/F)
9621C1090N001.DWG	AUX11	91-1	DI	PLC-1-1	UTILITY POS	AUTOMATIC TRANSFER SWITCH	
9621C1090N001.DWG	AUX12	91-1	DI	PLC-1-1	UTILITY AVAIL	AUTOMATIC TRANSFER SWITCH	
9621C1090N001.DWG	AUX13	91-1	DI	PLC-1-1	GEN AVAIL	AUTOMATIC TRANSFER SWITCH	
9621C1090N001.DWG	AUX14	91-1	DI	PLC-1-1	ATS FAIL	AUTOMATIC TRANSFER SWITCH	
9621C1090N001.DWG	AUX2	91-1	DI	PLC-1-1	FAIL ENG	ENGINE CONTROL PANEL	
9621C1090N001.DWG	AUX3	91-1	DI	PLC-1-1	COMMON WARNING	ENGINE CONTROL PANEL	
9621C1090N001.DWG	AUX4	91-1	DI	PLC-1-1	COMMON ALARM	ENGINE CONTROL PANEL	
9621C1090N001.DWG	AUX5	91-1	DI	PLC-1-1	ENG COOLDOWN	ENGINE CONTROL PANEL	
9621C1090N001.DWG	AUX6	91-1	DI	PLC-1-1	CRANK ALARM	ENGINE CONTROL PANEL	
9621C1090N001.DWG	AUX7	91-1	DI	PLC-1-1	NOT IN AUTO	ENGINE CONTROL PANEL	
9621C1090N001.DWG	AUX8	91-1	DI	PLC-1-1	ECP FAIL	ENGINE CONTROL PANEL	
9621C1090N001.DWG	AUX9	91-1	DI	PLC-1-1	NOT IN AUTO	AUTOMATIC TRANSFER SWITCH	
9621C1090N001.DWG	ESL1	91-1	DI	PLC-1-1	LOW VOLT BATT	ENGINE CONTROL PANEL	
PLC-1-1 Total DI Points = 69							

PLC I/O Listing for PLC-1-1

Drawing	Function	Loop	I/O	Location	Description	Service	(E/F)
9621C1010N001.DWG	MS	10-1	DO	PLC-1-1	RUN	WELL PUMP 1	
9621C1010N001.DWG	SV	10-1	DO	PLC-1-1	OPEN	WELL PUMP 1	
9621C1050N001.DWG	MS	52-1	DO	PLC-1-1	RUN	JOCKEY PUMP 1	
9621C1050N001.DWG	MS1	52-1	DO	PLC-1-1	RUN	JOCKEY PUMP 1	
9621C1050N002.DWG	MS	54-1	DO	PLC-1-1	RUN	HIGH SERVICE PUMP 1	
9621C1050N002.DWG	MS1	54-1	DO	PLC-1-1	RUN	HIGH SERVICE PUMP 1	
9621C1050N003.DWG	MS	54-3	DO	PLC-1-1	RUN	HIGH SERVICE PUMP 3	
9621C1050N003.DWG	MS1	54-3	DO	PLC-1-1	RUN	HIGH SERVICE PUMP 3	
9621C1080N001.DWG	XB	80-1	DO	PLC-1-1	STROBE	CHEMICAL TANK NO. 1 LEVEL TRANS	
9621C1080N001.DWG	XH	80-1	DO	PLC-1-1	HORN	CHEMICAL TANK NO. 1 LEVEL TRANS	
9621C1080N002.DWG	MS	81-1	DO	PLC-1-1	RUN	SODIUM HYPOCHLORITE PUMP 1	
9621C1080N003.DWG	MS	81-3	DO	PLC-1-1	RUN	SODIUM HYPOCHLORITE PUMP 3	
9621C1090N001.DWG	MS	91-1	DO	PLC-1-1	RUN	AUTOMATIC TRANSFER SWITCH	
9621C1090N001.DWG	STP	91-1	DO	PLC-1-1	STOP ENG	AUTOMATIC TRANSFER SWITCH	
PLC-1-1	**Total DO Points = 14**						
9621C1080N002.DWG	FQ	81-1	RELAY	PLC-1-1	FLOW PULSE	FLOW METER	
PLC-1-1	**Total RELAY Points = 1**						
9621C1090N002.DWG	UPS	1-2	RS485	PLC-1-1		UPS POWER STATUS	
PLC-1-1	**Total RS485 Points = 1**						

Engineers...*Working Wonders With Water*™

PLC I/O Listing for PLC-1-2

Drawing	Function	Loop	I/O	Location	Description	Service	(E/F)
9621C1010N001.DWG	F	10-5	AI	PLC-1-2	FLOW	FLOW METER	F
9621C1010N001.DWG	L	10-5	AI	PLC-1-2	LEVEL	LEVEL TRANSMITTER	F
9621C1050N001.DWG	SB	52-2	AI	PLC-1-2	SPEED IN	JOCKEY PUMP 2	
9621C1050N002.DWG	SB	54-2	AI	PLC-1-2	SPEED IN	HIGH SERVICE PUMP 2	
9621C1050N003.DWG	SB	54-4	AI	PLC-1-2	SPEED IN	HIGH SERVICE PUMP 4	F
9621C1070N001.DWG	P	70-2	AI	PLC-1-2	PRESSURE	PRESSURE TRANSMITTER	
PLC-1-2	**Total AI Points = 6**						
9621C1050N001.DWG	SS	52-2	AO	PLC-1-2	SPEED OUT	JOCKEY PUMP 2	
9621C1050N002.DWG	SS	54-2	AO	PLC-1-2	SPEED OUT	HIGH SERVICE PUMP 2	
9621C1050N003.DWG	SS	54-4	AO	PLC-1-2	SPEED OUT	HIGH SERVICE PUMP 4	F
9621C1080N001.DWG	L	80-2	AO	PLC-1-2	LEVEL	CHEMICAL TANK NO. 2 LEVEL TRANS	
9621C1080N001.DWG	LY	80-2	AO	PLC-1-2	LEVEL IND	CHEMICAL TANK NO. 2 LEVEL TRANS	
9621C1080N002.DWG	SS	81-2	AO	PLC-1-2	SPEED OUT	SODIUM HYPOCHLORITE PUMP 2	
9621C1080N003.DWG	SS	81-4	AO	PLC-1-2	SPEED OUT	SODIUM HYPOCHLORITE PUMP 4	
PLC-1-2	**Total AO Points = 7**						

PLC I/O Listing for PLC-1-2

Drawing	Function	Loop	I/O	Location	Description	Service	(E/F)
9621C1010N001.DWG	AUX1	10-5	DI	PLC-1-2	RUNNING	WELL PUMP 5	F
9621C1010N001.DWG	HSDA	10-5	DI	PLC-1-2	AUTO	WELL PUMP 5	F
9621C1010N001.DWG	PSH	10-5	DI	PLC-1-2	PRESS HI	PRESSURE SWITCH HIGH	F
9621C1010N001.DWG	PSL	10-5	DI	PLC-1-2	PRESS LOW	PRESSURE SWITCH LOW	F
9621C1010N001.DWG	TSH	10-5	DI	PLC-1-2	TEMP HI	WELL PUMP 5	F
9621C1050N001.DWG	AUX1	52-2	DI	PLC-1-2	RUNNING	JOCKEY PUMP 2	
9621C1050N001.DWG	AUX11	52-2	DI	PLC-1-2	VFD POWER ON	JOCKEY PUMP 2	
9621C1050N001.DWG	AUX2	52-2	DI	PLC-1-2	FAILED	JOCKEY PUMP 2	
9621C1050N001.DWG	HSDA1	52-2	DI	PLC-1-2	AUTO	JOCKEY PUMP 2	
9621C1050N001.DWG	HSDA2	52-2	DI	PLC-1-2	VFD POWER AUTO	JOCKEY PUMP 2	
9621C1050N001.DWG	PSH	52-2	DI	PLC-1-2	PRESS HI	PRESSURE SWITCH HIGH	
9621C1050N001.DWG	PSL	52-2	DI	PLC-1-2	PRESS LOW	PRESSURE SWITCH LOW	
9621C1050N001.DWG	TSH	52-2	DI	PLC-1-2	TEMP HI	JOCKEY PUMP 2	
9621C1050N002.DWG	AUX1	54-2	DI	PLC-1-2	RUNNING	HIGH SERVICE PUMP 2	
9621C1050N002.DWG	AUX11	54-2	DI	PLC-1-2	VFD POWER ON	HIGH SERVICE PUMP 2	
9621C1050N002.DWG	AUX2	54-2	DI	PLC-1-2	FAILED	HIGH SERVICE PUMP 2	
9621C1050N002.DWG	HSDA1	54-2	DI	PLC-1-2	AUTO	HIGH SERVICE PUMP 2	
9621C1050N002.DWG	HSDA2	54-2	DI	PLC-1-2	VFD POWER AUTO	HIGH SERVICE PUMP 2	
9621C1050N002.DWG	PSH	54-2	DI	PLC-1-2	PRESS HI	PRESSURE SWITCH HIGH	
9621C1050N002.DWG	PSL	54-2	DI	PLC-1-2	PRESS LOW	PRESSURE SWITCH LOW	
9621C1050N002.DWG	TSH	54-2	DI	PLC-1-2	TEMP HI	HIGH SERVICE PUMP 2	
9621C1050N003.DWG	AUX1	54-4	DI	PLC-1-2	RUNNING	HIGH SERVICE PUMP 4	F
9621C1050N003.DWG	AUX11	54-4	DI	PLC-1-2	VFD POWER ON	HIGH SERVICE PUMP 4	F
9621C1050N003.DWG	AUX2	54-4	DI	PLC-1-2	FAILED	HIGH SERVICE PUMP 4	F
9621C1050N003.DWG	AUX3	54-4	DI	PLC-1-2	READY	HIGH SERVICE PUMP 4	F
9621C1050N003.DWG	HSDA1	54-4	DI	PLC-1-2	AUTO	HIGH SERVICE PUMP 4	F
9621C1050N003.DWG	HSDA2	54-4	DI	PLC-1-2	VFD POWER AUTO	HIGH SERVICE PUMP 4	F
9621C1050N003.DWG	PSH	54-4	DI	PLC-1-2	PRESS HI	PRESSURE SWITCH HIGH	F

Engineers...*Working Wonders With Water*™

PLC I/O Listing for PLC-1-2

Drawing	Function	Loop	I/O	Location	Description	Service	(E/F)
9621C1050N003.DWG	PSL	54-4	DI	PLC-1-2	PRESS LOW	PRESSURE SWITCH LOW	F
9621C1050N003.DWG	TSH	54-4	DI	PLC-1-2	TEMP HI	HIGH SERVICE PUMP 4	F
9621C1080N002.DWG	AUX1	81-2	DI	PLC-1-2	RUNNING	SODIUM HYPOCHLORITE PUMP 2	
9621C1080N002.DWG	AUX2	81-2	DI	PLC-1-2	FAILED	SODIUM HYPOCHLORITE PUMP 2	
9621C1080N002.DWG	HSDA	81-2	DI	PLC-1-2	AUTO	SODIUM HYPOCHLORITE PUMP 2	
9621C1080N003.DWG	AUX1	81-4	DI	PLC-1-2	RUNNING	SODIUM HYPOCHLORITE PUMP 4	
9621C1080N003.DWG	AUX2	81-4	DI	PLC-1-2	FAILED	SODIUM HYPOCHLORITE PUMP 4	
9621C1080N003.DWG	HSDA	81-4	DI	PLC-1-2	AUTO	SODIUM HYPOCHLORITE PUMP 4	
PLC-1-2	**Total DI Points = 36**						
9621C1010N001.DWG	MS	10-5	DO	PLC-1-2	RUN	WELL PUMP 5	F
9621C1010N001.DWG	SV	10-5	DO	PLC-1-2	OPEN	WELL PUMP 5	F
9621C1050N001.DWG	MS	52-2	DO	PLC-1-2	RUN	JOCKEY PUMP 2	
9621C1050N001.DWG	MS1	52-2	DO	PLC-1-2	RUN	JOCKEY PUMP 2	
9621C1050N002.DWG	MS	54-2	DO	PLC-1-2	RUN	HIGH SERVICE PUMP 2	
9621C1050N002.DWG	MS1	54-2	DO	PLC-1-2	RUN	HIGH SERVICE PUMP 2	
9621C1050N003.DWG	MS	54-4	DO	PLC-1-2	RUN	HIGH SERVICE PUMP 4	F
9621C1050N003.DWG	MS1	54-4	DO	PLC-1-2	RUN	HIGH SERVICE PUMP 4	F
9621C1080N002.DWG	MS	81-2	DO	PLC-1-2	RUN	SODIUM HYPOCHLORITE PUMP 2	
9621C1080N003.DWG	MS	81-4	DO	PLC-1-2	RUN	SODIUM HYPOCHLORITE PUMP 4	
PLC-1-2	**Total DO Points = 10**						
9621C1080N003.DWG	FQ	81-3	RELAY	PLC-1-2	FLOW PULSE	FLOW METER	
PLC-1-2	**Total RELAY Points = 1**						

PLC I/O Listing for PLC-2-1

Drawing	Function	Loop	I/O	Location	Description	Service	(E/F)
9621C1010N003.DWG	F	10-2	AI	PLC-2-1	FLOW	FLOW METER	
9621C1010N003.DWG	L	10-2	AI	PLC-2-1	LEVEL	LEVEL TRANSMITTER	
9621C1092N002.DWG	T	2-1	AI	PLC-2-1	TEMP	TEMPERATURE TRANSMITTER	
9621C1092N002.DWG	T	2-1	AI	PLC-2-1	PLC TEMP	PROCESS CONTROL MODULE - CONTROL PANEL	
9621C1092N001.DWG	J2	92-1	AI	PLC-2-1	KW ENG	ENGINE CONTROL PANEL	
9621C1092N001.DWG	K	92-1	AI	PLC-2-1	FREQ ENG	ENGINE CONTROL PANEL	
PLC-2-1	**Total AI Points = 6**						
9621C1082N002.DWG	SS	82-1	AO	PLC-2-1	SPEED OUT	SODIUM HYPOCHLORITE PUMP 1	
9621C1082N002.DWG	SS	82-2	AO	PLC-2-1	SPEED OUT	SODIUM HYPOCHLORITE PUMP 2	
PLC-2-1	**Total AO Points = 2**						

Engineers...Working Wonders With Water™

PLC I/O Listing for PLC-2-1

Drawing	Function	Loop	I/O	Location	Description	Service	(E/F)
9621C1010N003.DWG	AUX1	10-2	DI	PLC-2-1	RUNNING	WELL PUMP 2	
9621C1010N003.DWG	AUX2	10-2	DI	PLC-2-1	FAILED	WELL PUMP 2	
9621C1010N003.DWG	HSDA	10-2	DI	PLC-2-1	AUTO	WELL PUMP 2	
9621C1010N003.DWG	PSH	10-2	DI	PLC-2-1	PRESS HI	PRESSURE SWITCH HIGH	
9621C1010N003.DWG	PSL	10-2	DI	PLC-2-1	PRESS LOW	PRESSURE SWITCH LOW	
9621C1010N003.DWG	TSH	10-2	DI	PLC-2-1	TEMP HI	WELL PUMP 2	
9621C1092N002.DWG	JS1	2-1	DI	PLC-2-1	PWR SUP OK	PROCESS CONTROL MODULE - CONTROL PANEL	
9621C1092N002.DWG	XA8	2-1	DI	PLC-2-1	SPD FAIL	PCM SURGE PROTECTOR	
9621C1092N002.DWG	ZS	2-1	DI	PLC-2-1	INTRUSION	PROCESS CONTROL MODULE - CONTROL PANEL	
9621C1092N002.DWG	ZS	2-1	DI	PLC-2-1	INTRUSION	PROCESS CONTROL MODULE - CONTROL PANEL	
9621C1092N002.DWG	AUX1	2-2	DI	PLC-2-1	ON UPS POWER	UPS POWER STATUS	
9621C1092N002.DWG	XA3	2-2	DI	PLC-2-1	LO BATT	UPS POWER STATUS	
9621C1092N002.DWG	XA4	2-2	DI	PLC-2-1	UPS FAIL	UPS POWER STATUS	
9621C1050N002.DWG	FSH	54-1	DI	PLC-2-1	FLOW HI	FLOW SWITCH HIGH	
9621C1082N002.DWG	AUX1	82-1	DI	PLC-2-1	RUNNING	SODIUM HYPOCHLORITE PUMP 1	
9621C1082N002.DWG	AUX2	82-1	DI	PLC-2-1	FAILED	SODIUM HYPOCHLORITE PUMP 1	
9621C1082N001.DWG	FSH	82-1	DI	PLC-2-1	FLOW HI	FLOW SWITCH HIGH	
9621C1082N002.DWG	HSDA	82-1	DI	PLC-2-1	AUTO	SODIUM HYPOCHLORITE PUMP 1	
9621C1082N002.DWG	AUX1	82-2	DI	PLC-2-1	RUNNING	SODIUM HYPOCHLORITE PUMP 2	
9621C1082N002.DWG	AUX2	82-2	DI	PLC-2-1	FAILED	SODIUM HYPOCHLORITE PUMP 2	
9621C1082N002.DWG	HSDA	82-2	DI	PLC-2-1	AUTO	SODIUM HYPOCHLORITE PUMP 2	
9621C1092N001.DWG	AUX1	92-1	DI	PLC-2-1	RUNNING ENG	ENGINE CONTROL PANEL	
9621C1092N001.DWG	AUX10	92-1	DI	PLC-2-1	GEN POS	AUTOMATIC TRANSFER SWITCH	
9621C1092N001.DWG	AUX11	92-1	DI	PLC-2-1	UTILITY POS	AUTOMATIC TRANSFER SWITCH	
9621C1092N001.DWG	AUX12	92-1	DI	PLC-2-1	UTILITY AVAIL	AUTOMATIC TRANSFER SWITCH	
9621C1092N001.DWG	AUX13	92-1	DI	PLC-2-1	GEN AVAIL	AUTOMATIC TRANSFER SWITCH	
9621C1092N001.DWG	AUX14	92-1	DI	PLC-2-1	ATS FAIL	AUTOMATIC TRANSFER SWITCH	
9621C1092N001.DWG	AUX2	92-1	DI	PLC-2-1	FAIL ENG	ENGINE CONTROL PANEL	

PLC I/O Listing for PLC-2-1

Drawing	Function	Loop	I/O	Location	Description	Service	(E/F)
9621C1092N001.DWG	AUX3	92-1	DI	PLC-2-1	COMMON WARNING	ENGINE CONTROL PANEL	
9621C1092N001.DWG	AUX4	92-1	DI	PLC-2-1	COMMON ALARM	ENGINE CONTROL PANEL	
9621C1092N001.DWG	AUX5	92-1	DI	PLC-2-1	ENG COOLDOWN	ENGINE CONTROL PANEL	
9621C1092N001.DWG	AUX6	92-1	DI	PLC-2-1	CRANK ALARM	ENGINE CONTROL PANEL	
9621C1092N001.DWG	AUX7	92-1	DI	PLC-2-1	NOT IN AUTO	ENGINE CONTROL PANEL	
9621C1092N001.DWG	AUX8	92-1	DI	PLC-2-1	ECP FAIL	ENGINE CONTROL PANEL	
9621C1092N001.DWG	AUX9	92-1	DI	PLC-2-1	NOT IN AUTO	AUTOMATIC TRANSFER SWITCH	
9621C1092N001.DWG	ESL1	92-1	DI	PLC-2-1	LOW VOLT BATT	ENGINE CONTROL PANEL	
PLC-2-1	**Total DI Points = 36**						
9621C1010N003.DWG	MS	10-2	DO	PLC-2-1	RUN	WELL PUMP 2	
9621C1082N002.DWG	MS	82-1	DO	PLC-2-1	RUN	SODIUM HYPOCHLORITE PUMP 1	
9621C1082N002.DWG	MS	82-2	DO	PLC-2-1	RUN	SODIUM HYPOCHLORITE PUMP 2	
9621C1092N001.DWG	MS	92-1	DO	PLC-2-1	RUN	AUTOMATIC TRANSFER SWITCH	
9621C1092N001.DWG	STP	92-1	DO	PLC-2-1	STOP ENG	AUTOMATIC TRANSFER SWITCH	
PLC-2-1	**Total DO Points = 5**						
9621C1092N002.DWG	UPS	2-2	RS485	PLC-2-1		UPS POWER STATUS	
PLC-2-1	**Total RS485 Points = 1**						

PLC I/O Listing for PLC-3-1

Drawing	Function	Loop	I/O	Location	Description	Service	(E/F)
9621C1010N002.DWG	F	10-3	AI	PLC-3-1	FLOW	FLOW METER	
9621C1010N002.DWG	L	10-3	AI	PLC-3-1	LEVEL	LEVEL TRANSMITTER	
9621C1010N002.DWG	F	10-4	AI	PLC-3-1	FLOW	FLOW METER	
9621C1010N002.DWG	L	10-4	AI	PLC-3-1	LEVEL	LEVEL TRANSMITTER	
9621C1091N002.DWG	T	3-1	AI	PLC-3-1	TEMP	TEMPERATURE TRANSMITTER	
9621C1091N002.DWG	T	3-1	AI	PLC-3-1	PLC TEMP	PROCESS CONTROL MODULE - CONTROL PANEL	
9621C1091N001.DWG	J2	93-1	AI	PLC-3-1	KW ENG	ENGINE CONTROL PANEL	
9621C1091N001.DWG	K	93-1	AI	PLC-3-1	FREQ ENG	ENGINE CONTROL PANEL	
PLC-3-1	**Total AI Points = 8**						
9621C1081N002.DWG	SS	83-1	AO	PLC-3-1	SPEED OUT	SODIUM HYPOCHLORITE PUMP 1	
9621C1081N002.DWG	SS	83-2	AO	PLC-3-1	SPEED OUT	SODIUM HYPOCHLORITE PUMP 2	
PLC-3-1	**Total AO Points = 2**						

PLC I/O Listing for PLC-3-1

Drawing	Function	Loop	I/O	Location	Description	Service	(E/F)
9621C1010N002.DWG	AUX1	10-3	DI	PLC-3-1	RUNNING	WELL PUMP 3	
9621C1010N002.DWG	AUX2	10-3	DI	PLC-3-1	FAILED	WELL PUMP 3	
9621C1010N002.DWG	HSDA	10-3	DI	PLC-3-1	AUTO	WELL PUMP 3	
9621C1010N002.DWG	PSH	10-3	DI	PLC-3-1	PRESS HI	PRESSURE SWITCH HIGH	
9621C1010N002.DWG	PSL	10-3	DI	PLC-3-1	PRESS LOW	PRESSURE SWITCH LOW	
9621C1010N002.DWG	TSH	10-3	DI	PLC-3-1	TEMP HI	WELL PUMP 3	
9621C1010N002.DWG	AUX1	10-4	DI	PLC-3-1	RUNNING	WELL PUMP 4	
9621C1010N002.DWG	AUX2	10-4	DI	PLC-3-1	FAILED	WELL PUMP 4	
9621C1010N002.DWG	HSDA	10-4	DI	PLC-3-1	AUTO	WELL PUMP 4	
9621C1010N002.DWG	PSH	10-4	DI	PLC-3-1	PRESS HI	PRESSURE SWITCH HIGH	
9621C1010N002.DWG	PSL	10-4	DI	PLC-3-1	PRESS LOW	PRESSURE SWITCH LOW	
9621C1010N002.DWG	TSH	10-4	DI	PLC-3-1	TEMP HI	WELL PUMP 4	
9621C1091N002.DWG	JS1	3-1	DI	PLC-3-1	PWR SUP OK	PROCESS CONTROL MODULE - CONTROL PANEL	
9621C1091N002.DWG	XA8	3-1	DI	PLC-3-1	SPD FAIL	PCM SURGE PROTECTOR	
9621C1091N002.DWG	ZS	3-1	DI	PLC-3-1	INTRUSION	PROCESS CONTROL MODULE - CONTROL PANEL	
9621C1091N002.DWG	ZS	3-1	DI	PLC-3-1	INTRUSION	PROCESS CONTROL MODULE - CONTROL PANEL	
9621C1091N002.DWG	AUX1	3-2	DI	PLC-3-1	ON UPS POWER	UPS POWER STATUS	
9621C1091N002.DWG	XA3	3-2	DI	PLC-3-1	LO BATT	UPS POWER STATUS	
9621C1091N002.DWG	XA4	3-2	DI	PLC-3-1	UPS FAIL	UPS POWER STATUS	
9621C1081N001.DWG	FSH	81-1	DI	PLC-3-1	FLOW HI	FLOW SWITCH HIGH	
9621C1081N002.DWG	AUX1	83-1	DI	PLC-3-1	RUNNING	SODIUM HYPOCHLORITE PUMP 1	
9621C1081N002.DWG	AUX2	83-1	DI	PLC-3-1	FAILED	SODIUM HYPOCHLORITE PUMP 1	
9621C1081N002.DWG	HSDA	83-1	DI	PLC-3-1	AUTO	SODIUM HYPOCHLORITE PUMP 1	
9621C1081N002.DWG	AUX1	83-2	DI	PLC-3-1	RUNNING	SODIUM HYPOCHLORITE PUMP 2	
9621C1081N002.DWG	AUX2	83-2	DI	PLC-3-1	FAILED	SODIUM HYPOCHLORITE PUMP 2	
9621C1081N002.DWG	HSDA	83-2	DI	PLC-3-1	AUTO	SODIUM HYPOCHLORITE PUMP 2	
9621C1091N001.DWG	AUX1	93-1	DI	PLC-3-1	RUNNING ENG	ENGINE CONTROL PANEL	
9621C1091N001.DWG	AUX10	93-1	DI	PLC-3-1	GEN POS	AUTOMATIC TRANSFER SWITCH	

PLC I/O Listing for PLC-3-1

Drawing	Function	Loop	I/O	Location	Description	Service	(E/F)
9621C1091N001.DWG	AUX11	93-1	DI	PLC-3-1	UTILITY POS	AUTOMATIC TRANSFER SWITCH	
9621C1091N001.DWG	AUX12	93-1	DI	PLC-3-1	UTILITY AVAIL	AUTOMATIC TRANSFER SWITCH	
9621C1091N001.DWG	AUX13	93-1	DI	PLC-3-1	GEN AVAIL	AUTOMATIC TRANSFER SWITCH	
9621C1091N001.DWG	AUX14	93-1	DI	PLC-3-1	ATS FAIL	AUTOMATIC TRANSFER SWITCH	
9621C1091N001.DWG	AUX2	93-1	DI	PLC-3-1	FAIL ENG	ENGINE CONTROL PANEL	
9621C1091N001.DWG	AUX3	93-1	DI	PLC-3-1	COMMON WARNING	ENGINE CONTROL PANEL	
9621C1091N001.DWG	AUX4	93-1	DI	PLC-3-1	COMMON ALARM	ENGINE CONTROL PANEL	
9621C1091N001.DWG	AUX5	93-1	DI	PLC-3-1	ENG COOLDOWN	ENGINE CONTROL PANEL	
9621C1091N001.DWG	AUX6	93-1	DI	PLC-3-1	CRANK ALARM	ENGINE CONTROL PANEL	
9621C1091N001.DWG	AUX7	93-1	DI	PLC-3-1	NOT IN AUTO	ENGINE CONTROL PANEL	
9621C1091N001.DWG	AUX8	93-1	DI	PLC-3-1	ECP FAIL	ENGINE CONTROL PANEL	
9621C1091N001.DWG	AUX9	93-1	DI	PLC-3-1	NOT IN AUTO	AUTOMATIC TRANSFER SWITCH	
9621C1091N001.DWG	ESL1	93-1	DI	PLC-3-1	LOW VOLT BATT	ENGINE CONTROL PANEL	
PLC-3-1	**Total DI Points = 41**						
9621C1010N003.DWG	SV	10-2	DO	PLC-3-1	OPEN	WELL PUMP 2	
9621C1010N002.DWG	MS	10-3	DO	PLC-3-1	RUN	WELL PUMP 3	
9621C1010N002.DWG	SV	10-3	DO	PLC-3-1	OPEN	WELL PUMP 3	
9621C1010N002.DWG	MS	10-4	DO	PLC-3-1	RUN	WELL PUMP 4	
9621C1010N002.DWG	SV	10-4	DO	PLC-3-1	OPEN	WELL PUMP 4	
9621C1081N002.DWG	MS	83-1	DO	PLC-3-1	RUN	SODIUM HYPOCHLORITE PUMP 1	
9621C1081N002.DWG	MS	83-2	DO	PLC-3-1	RUN	SODIUM HYPOCHLORITE PUMP 2	
9621C1091N001.DWG	MS	93-1	DO	PLC-3-1	RUN	AUTOMATIC TRANSFER SWITCH	
9621C1091N001.DWG	STP	93-1	DO	PLC-3-1	STOP ENG	AUTOMATIC TRANSFER SWITCH	
PLC-3-1	**Total DO Points = 9**						
9621C1091N002.DWG	UPS	3-2	RS485	PLC-3-1		UPS POWER STATUS	
PLC-3-1	**Total RS485 Points = 1**						

SECTION 17950

TESTING, CALIBRATION, AND COMMISSIONING

PART 1 GENERAL

1.01 SUMMARY

A. Section includes:
   1. Testing requirements that apply to process control and instrumentation systems for the entire Project.

1.02 REFERENCES

A. As specified in Section 17050 - Common Work Results for Process Control and Instrumentation Systems.

B. Electronics Industries Alliance (EIA).

C. Telecommunications Industry Association (TIA).

1.03 DEFINITIONS

A. As specified in Sections 01756 - Commissioning and 17050 - Common Work Results for Process Control and Instrumentation Systems.

1.04 SYSTEM DESCRIPTION (NOT USED)

1.05 SUBMITTALS

A. Furnish submittals as specified in Section 01330 - Submittal Procedures.

B. General:
   1. Reference additional detailed test submittal scheduling and prerequisite requirements as specified in the Sequencing article of Section 17050 - Common Work Results for Process Control and Instrumentation Systems.

C. Overall test plan:
   1. Develop the PCIS system test submittals in consultation and cooperation with all applicable subcontractors.
   2. Develop and submit an overall testing plan for the PCIS. The overall test plan to be reviewed and approved by the Engineer before detailed test plans, procedures, and forms will be reviewed.
   3. Describe the test phases as they apply specifically to this Project and each process system.
   4. Provide a preliminary testing schedule to show the sequence of tests and commissioning as they apply to each process system and each PLC.
   5. Provide a description of factory tests. Describe what equipment will be included, what testing equipment will be used, and the simulator that will be used.
   6. Provide examples of proposed forms and checklists.

D. Test procedures:
   1. Develop and submit detailed test procedures to show that the integrated SCADA system hardware and software is fully operational and in compliance with the requirements specified in the Contract Documents.
   2. Provide a statement of test objectives for each test.
   3. Prepare specific procedures for each process system.
   4. Describe sequentially the steps to be followed in verifying the correct operation of each process system, including all features described in the loop descriptions, control strategies, and shown in the P&IDs. Implied or generic test procedures are not acceptable.
   5. Specify who will perform the tests, specifically what testing equipment will be used (including serial numbers and NIST-traceable calibration), and how the testing equipment will be used.
   6. Describe the expected role of the Engineer, as well as any requirements for assistance from Owner's staff.
   7. Provide the forms and checklists to be used.

E. Test forms:
   1. Provide test and calibration forms and checklists for each of the following:
      a. Calibration.
      b. Factory acceptance tests (FAT).
      c. Loop validation tests.
      d. Installation tests.
      e. Functional tests.
      f. Instrumentation Fine-Tuning.
      g. Communication Testing including all digital bus and all forms of Ethernet.
   2. Test forms shall include the detailed test procedures, or shall include clear references to separate pages containing the complete test procedure applicable to each form. If references to procedures are used, the complete procedure shall be included with each test binder.
   3. Every page of each test form shall include project name, date, time, name of person conducting the test, signature of person conducting the test, and for witnessed tests, place for signature of person (Engineer and Owner) witnessing the test.
   4. Some sample test forms are included at the end of this Section. These test forms show the minimum required test form content. They are not complete, and have not been customized for this Project. The Contractor is to develop and submit test forms customized for the Project and meeting all of the specified test and submittal requirements.

F. Testing binders:
   1. Sub-system to be tested, provide and submit a test binder containing all test procedures and individual test forms for the test. References to other documents for test procedures and requirements are not acceptable.
   2. Fill out in advance headings and all other information known before the test.
   3. Include applicable test plan information, as well as a list of all test prerequisites, test personnel, and equipment.
   4. Include or list reference material and provide separately at the time of the test.
   5. Record test results and verify that all test requirements and conditions have been met.

G. FAT procedure additional minimal requirements:
   1. Prepare and submit a FAT procedure which includes:
      a. Control system testing block diagram.
      b. Estimated test duration.
      c. Details on the simulator construction, components, and operation.

H. Test reports:
   1. At the conclusion of each test, submit a complete test report, including all test results and certifications.
   2. Include all completed test binders, forms, and checklists.
   3. Submission, review, and acceptance of each test report is required before the start of the sub-system.

1.06 QUALITY ASSURANCE

A. Test personnel:
   1. Furnish qualified technical personnel to perform all calibration, testing, and verification. The test personnel are required to be familiar with this Project and the equipment, software, and systems before being assigned to the test program.

1.07 DELIVERY, STORAGE, AND HANDLING (NOT USED)

1.08 PROJECT OR SITE CONDITIONS (NOT USED)

1.09 SEQUENCING (NOT USED)

1.10 SCHEDULING

A. As specified in Section 17050 - Common Work Results for Process Control and Instrumentation Systems.

1.11 WARRANTY (NOT USED)

1.12 SYSTEM START-UP (NOT USED)

1.13 OWNER’S INSTRUCTIONS (NOT USED)

1.14 MAINTENANCE (NOT USED)

PART 2 PRODUCTS

2.01 MANUFACTURERS (NOT USED)

2.02 EXISTING PRODUCTS (NOT USED)

2.03 MATERIALS (NOT USED)

2.04 MANUFACTURED UNITS (NOT USED)

2.05 EQUIPMENT (NOT USED)

2.06 COMPONENTS (NOT USED)

2.07 ACCESSORIES (NOT USED)

2.08 MIXES (NOT USED)

2.09 FABRICATION (NOT USED)

2.10 FINISHES (NOT USED)

2.11 SOURCE QUALITY CONTROL

A. Source testing:
   1. Provide manufacturer services as specified in the table below.

Section Number	Section Title	Source Testing (Witnessed or Non-Witnessed)
17100 - Control Strategies	Control Strategies	Non-Witnessed
17101 - Specific Control Strategies	Specific Control Strategies	Non-Witnessed
17710 - Control Systems - Panels, Enclosures, and Panel Components.	Control Systems - Panels, Enclosures, and Panel Components	Witnessed
17950 - Testing, Calibration, and Commissioning	Testing, Calibration, and Commissioning	Witnessed

   2. FAT - general:
      a. Performed during the Commissioning Phase, source testing activity.
      b. Before shipment to the Project Site, the complete PCIS system including all operator stations, servers, network equipment, printers, PCMs, PLCs, RTUs, LCPs, CCS, peripherals, communications equipment, and other SCADA equipment, shall be assembled, connected, and all software loaded for a fully functional FAT of the integrated system.
      c. Perform tests to show that the integrated system hardware and software is fully operational and in compliance with the requirements specified in the Contract Documents.
      d. Additional factory tests are specified in other sections of the Instrumentation and Control Specifications.
      e. The FAT will be witnessed.
      f. Right of observation: The Owner retains the right to observe all factory test activities including any and all subsystem preparation, pretests, troubleshooting, retests, warm-up, and software modification and/or update.
      g. The Owner reserves the right to test any specified function, whether or not explicitly stated in the test submittal.
      h. Correction of deficiencies: Any deficiencies observed during the test shall be corrected and retested before completion of the test.
      i. Any changes and/or corrections shall be noted on the test forms. Engineer shall witness the revisions and/or corrections prior to leaving the test site.

    - j. If the corrections and/or revisions are too extensive to be made while the Engineer is scheduled to be at the FAT test site, the FAT shall be, at the Engineer's sole discretion, considered failed, and the test shall be restarted at a later date. All costs for the re-test shall be borne by the Contractor.

3. Testing simulation:
    - a. The FAT shall make use of hardware simulators that contain switches, pilot lights, variable analog signal generators, and analog signal level displays, which shall be connected to the I/O points within the SCADA system. All inputs and outputs shall be simulated and proper control and system operation shall be validated.
    - b. The use of jumper wires, terminal block mounted pilot lights, and loose meters to act as or supply the functionality of a simulator shall not be allowed.
    - c. The hardware simulator may consist of a PLC, operating under a SCADA software package, or other approved software that has its I/O points wired to PLC's I/O points. Software operating on a PC may then act as the switches, pilot lights, variable analog signal generators, and analog signal level displays.
4. Preliminary FAT:
    - a. A complete preliminary FAT (pre-FAT) shall be conducted utilizing test procedures approved by the Engineer. The pre-FAT test procedure shall be a subset of the full FAT.
    - b. The purpose of the pre-FAT is to provide assurance to the Engineer that the SCADA system is ready for the full, witnessed FAT, in terms of both stability and functionality. Debugging of software and troubleshooting of hardware shall occur during and before the pre-FAT, not during the FAT. The Contractor shall fully test the SCADA system and fix all deficiencies found before the full FAT.
    - c. The Owner shall have the right to witness any or all of the pre-FAT testing and shall be notified in writing 20 days before the start of the pre-FAT.
    - d. The pre-FAT test results submittal shall include a letter, signed by the Contractor's project manager or company officer, certifying that the system is complete, has been tested successfully, and is fully ready for the full, witnessed FAT. The submittal shall include completed pre-FAT test forms, signed by the Contractor's staff, and shall be submitted for review before the start of the FAT.
5. Panel inspections:
    - a. The Engineer will inspect each control panel for completeness, workmanship, fit and finish, and compliance with the Contract Documents and the accepted shop drawings.
    - b. Provide panel inspection forms as part of the FAT procedures submittal.
    - c. Inspection to include, as a minimum: Layout, mounting, wire and data cable routing, wire tags, power supply, components and wiring, I/O components layout (including terminals, wiring and relays), device layout on doors and front panels, and proper ventilation operation.
    - d. A sample FAT control panel form has been provided at the end of this Section.

6. I/O test:
    a. Verify that I/O is properly wired to field terminals and is properly mapped into the PLC and the rest of the SCADA system, including all operator interface devices.
    b. Test methodology:
        1) Discrete inputs: Apply appropriate input at panel terminal, observe input card indicator, observe data value at each indicated data address, observe data received on all operator interface displays (SCADA workstations and local operator interface (LOI) displays).
        2) Discrete outputs: Issue commands from operator interface screen, verify output card indicator light and measure response at field wiring terminals. Analog inputs: Apply appropriate analog input signal at panel terminals, observe data value at each indicated data address, and observe data properly received at each operator screen. Check each point at 0 percent, 50 percent, and 100 percent of scale.
        3) Analog outputs: Enter scaled values in the output buffer file, observe the output data file value, and measure appropriate response at panel wiring terminals.
    c. Test forms to include, but not be limited to:
        1) PLC and panel number.
        2) I/O type.
        3) I/O tag name.
        4) Panel terminal block numbers.
        5) Rack/slot/number of I/O point.
        6) Check-off for correct response for each I/O point.
        7) Space for comments.
        8) Initials of individual performing test.
        9) Date test was performed.
        10) Witness’ signature lines.
7. System configuration test:
    a. Demonstrate and test the setup and configuration of all operator stations, servers, development stations, and peripherals.
    b. Demonstrate all utility software and functions, such as virus protection, backup, optical drive burning, network monitoring, etc.
    c. Demonstrate the proper operation of all peripheral hardware.
    d. Demonstrate all general SCADA functions.
    e. Demonstrate proper operation of log-on and other access security functions.
    f. Demonstrate the proper operation of all historical data storage, trend, display, backup, and report functions.
    g. Test automatic fail over of redundant equipment.
    h. Demonstrate the proper operation of the alarm display and acknowledgement functions.
    i. Test forms:
        1) For each test, list the specification page and paragraph of the function demonstrated, and provide a description of the function.
        2) List the specific tests and steps to be conducted.
        3) For each function, list all of the different sub-functions or ways the function can be used, and provide a test check-off for each:
            a) Include signature and date lines.

8. Control logic test:
    a. The purpose of this test is to verify that all software functions and logic work as specified, along with any hardwired logic or functions in the tested control panels.
    b. Testing requirements:
        1) Demonstrate each function described in Section 17100 - Control Strategies. Demonstrate in detail how each function operates under a variety of operating scenarios. Test to verify the application of each general control strategy function to each specific control strategy or loop description.
        2) Demonstrate the proper operation of the programming and configuration for each control strategy or loop description. Test each strategy or loop description on a sentence by sentence and function by function basis. Loops with similar or identical logic must each be tested individually.
        3) Demonstrate the proper operation of all digital communication links and networks. Verify each digital communication I/O point.
        4) Failure testing: In addition to demonstrating correct operation of all specified features, special effort shall be made to demonstrate how the system responds to and recovers from abnormal conditions including, but not limited to: equipment failure, operator error, communications subsystem error, communications failures, simulated/forced software lockups, power failure (both utility power and power to SCADA hardware), process equipment failure, and high system loading conditions.
    c. Test forms:
        1) Include the fully revised and approved control strategy for the loop being tested.
        2) Identify the cause and effect as each I/O point is toggled through the simulator. Check boxes shall be provided to track proper and/or improper operation of the loop.
        3) Any deficiencies or operational changes shall be noted on the forms for correction and documentation:
            a) Include signature and date lines.

PART 3 EXECUTION

3.01 EXAMINATION (NOT USED)

3.02 PREPARATION (NOT USED)

3.03 INSTALLATION

A. As specified in Section 17050 - Common Work Results for Process Control and Instrumentation Systems.

B. Installation supervision:
    1. Provide as specified in Section 17050 - Common Work Results for Process Control and Instrumentation Systems.

3.04 ERECTION, INSTALLATION, APPLICATION, CONSTRUCTION (NOT USED)

3.05 REPAIR/RESTORATION (NOT USED)

3.06 RE-INSTALLATION (NOT USED)

3.07 COMMISSIONING

A. Owner training:
  1. Complete Owner training as specified in Section 17050 - Common Work Results for Process Control and Instrumentation Systems.

B. Installation testing:
  1. General:
    a. The Owner reserves the right to test any specified function, whether or not explicitly stated in the test submittals.
    b. Failure testing:
      1) In addition to demonstrating correct operation of all specified features, demonstrate how the system reacts and recovers from abnormal conditions including, but not limited to:
        a) Equipment failure.
        b) Operator error.
        c) Communications sub-system error.
        d) Power failure.
        e) Process equipment failure.
        f) High system loading conditions.
    c. Conduct testing Monday through Friday during normal working hours for no more than 8 hours per day.
      1) Testing at other times requires approval of the Engineer.
  2. Sequencing:
    a. See additional requirements specified in the Sequencing article of Section 17050 - Common Work Results for Process Control and Instrumentation Systems.
  3. Calibration:
    a. After installation but before starting other tests, calibrate and adjust all instruments, devices, valves, and systems, in conformance with the component manufacturer's instructions and as specified in these Contract Documents.
    b. Components having adjustable features are to be set carefully for the specific conditions and applications of this installation. Test and verify that components and/or systems are within the specified limits of accuracy.
    c. Replace either individually or within a system, defective elements that cannot achieve proper calibration or accuracy.
    d. Calibration points:
      1) Calibrate each analog instrument at 0 percent, 25 percent, 50 percent, 75 percent, and 100 percent of span, using test instruments with accuracies traceable to NIST.
    e. Field verify calibration of instruments that have been factory-calibrated to determine whether any of the calibrations are in need of adjustment.

f. Analyzer calibration:
    1) Calibrate and test each analyzer system as a workable system after installation. Follow the testing procedures directed by the manufacturers' technical representatives.

g. Complete instrument calibration sheets for every field instrument and analyzer.

h. Calibration tags:
    1) Attach a calibration and testing tag to each instrument, piece of equipment, or system.
    2) Sign the tag when calibration is complete.

4. LAN cable post-testing:
    a. After installing the cable and connectors, test all cables using the LAN certification to confirm the installation meets the requirements of the specification.
    b. Provide test documentation that includes the cable number, total length of cable, a permanent hard copy, as well as a-USB or CD copy of all traces.
        1) After installing connectors:
        2) Perform cable end-to-end testing on all installed cables from both ends of the cable. Test shall include cable system performance tests and confirm the absence of wiring errors.
        3) Submit a signed test report presenting the results of the cable testing.
        4) Repair or replace any portions of the system not meeting ANSI/TIA/EIA standards for a Category 6 installation. Repaired sections shall be retested.
    c. Submit 3 copies of all final documentation (including traces), using the approved test form, to the Engineer upon successful completion of the testing.

5. Industrial network testing:
    a. Network operation may be interrupted for inspection and testing.
    b. Test equipment:
        1) The following test equipment will be utilized in the execution of the described qualification and testing procedures.
            a) Network line analyzer, ProfiTrace v1.6.
            b) Oscilloscope, Fluke Scopemeter Series 190 or equivalent.
            c) Digital VOM, Fluke 87 Multimeter or equivalent.
            d) Network bus monitor, ProfiTrace v1.6.
    c. Installation qualification and test procedures:
        1) Visual and mechanical inspection:
            a) Compare network devices nameplate data with drawings and specifications.
            b) Confirm network components are PTO compliant.
            c) Verify labeling of all trunk cables.
            d) Confirm minimum cable distance between nodes.
            e) Verify the presence/absence of stub lines.
            f) Verify network terminators are in place.
            g) Verify power supply source and connections for active terminations.
            h) Verify total network node count.
            i) Verify power supply specifications including quantity, ratings, locations, and configuration. Verify power supply source of supply location, conductor size, and rating.

    - j) Inspect accessible network cabling for adherence to specified installation practices:
        - (1) Cable installed in conduit or protective raceway.
        - (2) Cable proximity to high voltage wiring.
        - (3) Exposure to extreme temperatures, shock, vibration, chemicals, or moisture.
        - (4) Bend radius.
    - k) Inspect cable and conductor terminations for adherence to specified installation practices.
    - l) Check all accessible components for evidence of physical damage.
    - m) Check grounding techniques including ground conductor sizes and termination points.
    - n) Non-permissible cable length.
    - o) Wrong cable type.
    - p) Signal reflections.

- d. Electrical tests:
  - 1) Measure network resistance.
  - 2) Measure network cable length.
  - 3) Line analysis for the following conditions:
    - a) Short circuit between signal lines A and B.
    - b) Short circuit between signal lines A and B and the cable shield.
  - 4) Shield continuity.
  - 5) Cross-wired signals lines.
  - 6) Terminator installed in wrong position.
  - 7) Poor transmission or reception levels.
  - 8) Non-permissible stub line.
- e. Generate slave list.
- f. Measure power supply voltage at active terminations.
- g. Evaluation:
  - 1) Confirm the network cable topology (length and configuration) does not exceed data rate limitations.
  - 2) Confirm total stub length (if required by design) does not exceed data rate limitations.
  - 3) Calculate spare trunk length for the specified data rate.
- h. Operations qualifications and test procedures:
  - 1) Electrical tests:
    - a) Examine the data traffic between the master and each slave device.
    - b) Verify baud rate.
    - c) Confirm signal level.
    - d) Verify network cycle time.
    - e) Generate “live” slave list.
    - f) Verify and record scanner diagnostic data including node status and error codes.
    - g) Monitor and capture network waveform.
- i. Evaluation:
  - 1) Confirm all specified slave devices appear on the live list.
  - 2) Evaluate data traffic between master and each slave to confirm proper slave configuration and performance.
  - 3) Inspect waveform capture for evidence of excessive noise.

        4) Evaluate and report any failed or questionable network tests.
        5) Evaluate and report network error codes and related symptoms.

6. Ultrasonic and radar check out:
    a. Check response under all operating conditions.
    b. Track all responses through trend charts in the SCADA system.
    c. Provide Echo Transmission and signal quality on all level transmitters including guided and unguided units.
        1) Provide printout of the actual transmission and all parameters.
7. Loop check/validation:
    a. Check all control loops under simulated operating conditions by causing a range of input signals at the primary control elements and observing appropriate responses of the respective control and monitoring elements, final control elements, and the graphic displays associated with the SCADA system. Issue commands from the SCADA system and verify proper responses of field devices. Use actual process inputs wherever available.
    b. Provide “end-to-end” tests:
        1) Test SCADA system inputs from field device to SCADA system operator workstations.
        2) Test SCADA system outputs from SCADA operator workstations to field devices and equipment.
        3) Observe and record responses at all intermediate devices.
        4) Test and record operator commands and signal readouts to each operator device where there is more than one operator interface point.
        5) For each signal, perform separate tests for SCADA computer screens, local operator interface (LOI) screens, and local control panels.
    c. Retest any loop following any necessary corrections.
    d. Apply simulated sensor inputs corresponding to 0 percent, 25 percent, 50 percent, 75 percent, and 100 percent of span for networks that incorporate analog elements, and monitor the resulting outputs to verify compliance to accuracy tolerance requirements.
    e. Apply continuously variable up and down analog inputs to verify the proper operation and setting of discrete devices (signal trips, etc.).
    f. Apply provisional settings on controllers and alarm setpoints.
    g. Record all analog loop test data on test forms.
    h. Exercise each field device requiring an analog command signal, through the SCADA system. Vary, during the validation process, the output from the PLC SCADA system and measure the end device position, speed, etc. to confirm the proper operation of the device for the supplied analog signal. Manually set the output from the SCADA screen at 0 percent, 25 percent, 50 percent, 75 percent, and 100 percent and measure the response at the final device and at any intermediate devices.
    i. Exercise each field device providing a discrete input to the SCADA system in the field and observe the proper operation shall be observed at the operator workstation:
        1) Test limit switches, set limits mechanically, and observe proper operation at the operator workstation.
        2) Exercise starters, relay contacts, switch contacts, and observe proper operation.

        3) Calibrate and test instruments supplying discrete inputs, and observe proper operation.
    j. Test each device accepting a discrete output signal from the SCADA. Perform the appropriate operator action at the SCADA operator stations (including LOIs, if present) and confirm the proper operation of the field device:
        1) Stroke valves through outputs from the SCADA system, and confirm proper directional operation. Confirm travel limits and any feedback signals to the SCADA system.
        2) Exercise motors starters from the SCADA system and verify proper operation through direct field observation.
        3) Exercise solenoids and other field devices from the SCADA system and verify proper operation through direct field observation.
    k. Include in the test forms:
        1) Analog input devices:
            a) Calibration range.
            b) Calibration data: Input, output, and error at each test value.
            c) Analog input associated PLC register address.
            d) Value in PLC register at each test point.
            e) Value displayed at each operator interface station (local operator interface displays and SCADA workstations).
        2) Analog output devices:
            a) Calibration range.
            b) Test value at each test point.
            c) Analog output associated PLC register address.
            d) Control variable value at field device at each test point.
            e) Physical device response at each test point:
                (1) Response to be actual valve position, or motor speed, etc.
        3) Discrete instrument input devices:
            a) Switch setting, contact action, and dead band.
            b) Valve position switches:
                (1) Response in the PLC as the valve is stroked from the PLC.
                (2) Field observed actual valve position, and valve indicator position as the valve is stroked from the PLC.
            c) Operator interface switches (control stations and other pilot devices) and associated response.
            d) Starter and drive auxiliary device contact response.
            e) Response of all other discrete inputs to the PLC.
        4) Discrete output devices:
            a) Observed response of field device to the discrete output from the PLC.
            b) Observe the proper operation of Open, Close, Start, Stop, On, Off, etc.
        5) Test equipment used and associated serial numbers.

C. Functional Testing:
    1. General:
        a. Commence Functional tests after completion of all loop check/validation tests:
            1) As specified in Section 17050 - Common Work Results for Process Control and Instrumentation Systems, Sequencing and Scheduling article.

    b. Functional to demonstrate proper operation of all systems with process equipment operating over full operating ranges under conditions as closely resembling actual operating conditions as possible.
    c. Additional tests are specified in other Instrumentation and Control Sections.
    d. Follow approved detailed test procedures and check lists for Functional Test activities.
2. Control logic operational validation:
    a. The purpose of control logic validation is to field test the operation of the complete control system, including all parts of the SCADA system, all control panels (including vendor control panels), all control circuits, all control stations, all monitored/controlled equipment, and final control elements.
    b. Demonstrate all control functionality shown on the P&IDs, control schematics, and other drawings, and specified in the loop descriptions, control strategies, Electrical Specifications, and Mechanical Equipment Specifications.
    c. Test in detail on a function-by-function and sentence-by-sentence basis.
    d. Thoroughly test all hardware and software functions:
        1) Including all hardwired and software control circuit interlocks and alarms.
    e. Test final control elements, controlled equipment, control panels, and ancillary equipment under startup, shut down, and steady-state operating conditions to verify all logic and control is achieved.
    f. Control logic validation tests to include, but not limited to: a repeat of all control logic tests from the FAT, modified and expanded to include all field instruments, control panels, circuits, and equipment.
3. Loop tuning:
    a. Optimally tune all electronic control stations and software control logic incorporating proportional, integral, or derivative control. Apply control signal disturbances at various process variable levels and adjusting the gain, reset, or rate settings as required to achieve proper response.
    b. Verify the transient stability of final control elements operating over the full range of operating conditions, by applying control signal disturbances, monitoring the amplitude and decay rate of control parameter oscillations and making necessary controller adjustments as required to eliminate excessive oscillatory amplitudes and decay rates. As a minimum, achieve 1/4-wave amplitude decay ratio damping (subsidence ratio of 4) under the full range of operating conditions.
    c. If excessive oscillations or system instability occur, as determined by the Engineer, continue tuning and parameter adjustments, or develop and implement any additional control algorithms needed to achieve satisfactory control loop operation.
4. Functional validation sheets:
    a. Document each Functional test on an approved test form.
    b. Document loop tuning with a report for each loop, including two-pen chart recordings showing the responses to step disturbance at a minimum of 3 setpoints or process rates approved by the Engineer. Show tuning parameters on the charts, along with time, date, and sign-off by Contractor and Engineer.
    c. Include on the form, functions which can be demonstrated on a loop-by-loop basis:

        1) Loop number and P&ID number.
        2) Control strategy, or reference to specification tested.
        3) Test procedures: Where applicable, use the FAT function-by-function, sentence-by-sentence loop test checklist forms modified to meet the requirements of the Functional test. Otherwise, create new forms.
    d. For functions that cannot be demonstrated on a loop-by-loop basis (such as overall plant power failure), include on the test form a listing of the specific steps and tests to be conducted. Include with each test description the following information:
        1) Specification page and paragraph of function demonstrated.
        2) Description of function and/or text from specification.
        3) Test procedures: use the FAT loop test checklist forms modified to meet the specific testing conditions of the Functional test.
5. Functional certification:
    a. Provide Manufacturer's Certificate of Installation and Functionality Compliance as specified in Section 01756 - Commissioning.
        1) Including all test forms with test data entered, submitted to the Engineer with a clear and unequivocal statement that all Functional test requirements have been satisfied.

D. Instrumentation Fine-Tuning:
1. After the Process Operational Period, test PCIS system for additional 60 days as specified in this Section to identify issues and make corrections, as needed.
2. General:
    a. The performance test is part of the Work that must be completed as a condition of substantial completion and final completion for the entire Project.
    b. The complete PLC control and SCADA system must run continuously for the duration of the performance test.
    c. Test and use the entire process control system under standard operating conditions.
    d. Exercise all system functions.
    e. Log failure, any system interruption and accompanying component, subsystem, or program failure including time of occurrence, duration of each failure, failure classification, and cause:
        1) Provide a competently trained technician or programmer on call for the Project Site during all normal working days and hours from the start of the performance test until final acceptance of the system.
            a) Response time to the Project Site: 24 hours or less, for a major failure.
3. SCADA system testing:
    a. Exercise each system function, e.g., status report, alarms, logs, and displays several times at a minimum, and in a manner that approximates "normal" system operation.
    b. Failure of the SCADA system during testing shall be considered as indicating that the programs and operating system do not meet the requirements of the specifications.
        1) Corrective action is required before restarting the performance test.

4. Failures:
    a. Classify failures as either major or minor:
        1) Minor failure:
            a) A small and non-critical component failure or software problem that can be corrected by the Owner's operators.
            b) Log this occurrence but this is not a reason for stopping the test and is not grounds for non-acceptance.
            c) Should the same or similar component failure occur repeatedly, this may be considered as grounds for non-acceptance.
            d) Failure of one printer or operator station is considered a minor failure providing all functions can be provided by backup equipment, i.e., alternate printers and operator station, and repairs can be made and equipment returned to service within 3 working days.
        2) Major failure:
            a) Considered to have occurred when a component, subsystem, software control, or program fault causes a halt in or improper operation of the system and/or when a technician's work is required to make a repair or to re-initiate operation of the system.
            b) Cause termination of the performance test.
            c) Start a new acceptance test when the causes of a major failure have been corrected.
            d) A failure is also considered major when failure of any control system that results in an overflow, underflow, overdose, or underdose condition occurs.
5. Technician report:
    a. Each time a technician is required to respond to a system malfunction, they must complete a report, which includes details concerning the nature of the complaint or malfunction and the resulting repair action required and taken.
    b. If a malfunction occurs which clears itself or which the operator on duty is able to correct, no report is required or logged as specified above.
    c. If a technician has performed work but no report is written, then a major failure is considered to have occurred.
    d. Each report shall be submitted within 24 hours to the Engineer and the Owner, or its representative.

3.08 FIELD QUALITY CONTROL (NOT USED)

3.09 ADJUSTING (NOT USED)

3.10 CLEANING (NOT USED)

3.11 PROTECTION (NOT USED)

3.12 SCHEDULES

A. Example test forms:
    1. Example test forms are attached at the end of this Section. They may be used as a starting point for the development of Project-specific test forms for this Project.

2. The example test forms are not intended to be complete or comprehensive. Edit and supplement the forms to meet the requirements for testing and test forms specified in this Section and other Contract Documents.

END OF SECTION

FACTORY ACCEPTANCE TEST - CONTROL PANELS

1. GENERAL INSPECTION

A. Structural Inspection

☐ Verify Lifting Lugs Installed
☐ Verity enclosure has lock and lock is functional
☐ Confirm that seismic bracing components are provided per manufacturer’s installation instructions

B. Exterior Inspection

☐ Cabinet exterior is clean, scratch, and dent free
☐ Inspect externally for corrosion and damage
☐ Verify enclosure door opens and closes easily
☐ Verify enclosure has a 3-point latch
☐ Verify enclosure has a flange mounted disconnect (where voltages greater than 120 VAC enter the cabinet)
☐ Verify enclosure has the appropriate NEMA rating (1, 1G, 12, 3R, 4, 4X, etc.)
☐ Verify enclosure is the appropriate size (not grossly larger than design, and will still fit in the plant)

Nameplates

☐ Cabinet has identification nameplate
☐ All door labels are straight, spelled correctly, and match the tagging defined in the Contract
☐ Cabinet has a nameplate that includes the following:

☐ Power source(s)
☐ Circuit ID(s)
☐ Integrator’s Logo
☐ Short Circuit KAIC ratings

☐ If labels are screwed to door, silicone was utilized to cover screw holes (Labels screwed to the door of a NEMA 4/4X panel technically violates the NEMA rating.)

Door Devices

☐ All devices penetrating the outside of panel have gaskets, silicone or both
☐ All door devices are installed (HMIs, Pilot Devices, etc.)
☐ Door mounted equipment is mounted straight and square
☐ All exterior or door mounted equipment present and accounted for, installed and securely fastened
☐ NEMA classification has not been violated due to penetrations
☐ Door mounted equipment has the same NEMA rating as the panel
☐ All door mounted equipment installed at the correct height
☐ All door mounted equipment installed in the correct positions and order (layout of door mounted equipment is grouped properly and in a logical manner)
☐ Doors with multiple penetrations have adequate bracing (if needed)
☐ Visually check condition of indicators , controllers and annunciators
☐ Check that pilot lights illuminate correctly
☐ Check the Push-To-Test function
☐ Ensure correct pilot light color

Peripheral Devices

☐ Horn / Beacon is installed (where required)
☐ Silence and Reset pushbutton

PROJECT NAME: ____________________ TEST DATE: ____________
FACILITY NAME: ____________________ TESTED BY: ____________
PROCESS AREA: ____________________ COMPANY: ____________
NETWORK ID: ____________________ PAGE: ____________
WITNESSED BY: ____________________ SIGNATURE: ____________

1. GENERAL INSPECTION (continued)

C. Interior Inspection

☐ Cabinet is cleaned of marks and dirt.
☐ Inspect internally for corrosion and damage.
☐ Back panel is clean of marks and dirt.
☐ Interior of panel vacuumed and shall be free of all debris.
☐ Check that the panel roof is clean and clear of foreign materials.
☐ Bottom of panel has been cut out (where bottom entry is required), with angle iron welded around the bottom perimeter. Re-painting has been performed.
☐ If internal light door limit switch is provided, ensure the light automatically turns "on" when the doors are open.
☐ Intrusion alarms (where required).

Interior Labeling

☐ All panel mounted equipment has identification labeling, by using either a Brothers or Phenolic type tags.
☐ Verify that door mounted components are mounted square and symmetrical.
☐ Verify that nameplates are straight, legible, and spelled correctly.
☐ All terminal blocks are identified/labeled with permanent labels including tight end blocks and caps.
☐ All wiring shrink labeled and or phased correctly to the specifications.
☐ All wire labels shrunk completely rotated and aligned alike for easy identification.
☐ All fuses and circuit breakers are labeled with ID and current rating.
☐ System Integrator’s label or labels installed on door.
☐ Panel manufacturer model/serial number tag is present.
☐ All required safety/warning tags installed and straight.
☐ Correct UL (typically UL 508) or cUL tag installed and registered and all other associated tags installed and straight (the UL tag might not be installed in the panel at the factory test. If the panel is modified due to changes during the factory test or a punch list generated from the factory test, the UL labeling would need to be re-applied. Some UL shops do not apply the UL label until the panel is released to be shipped.).

Wireways

☐ Plastic wire way covers installed properly.
☐ Plastic wireways have no sharp edges.
☐ No wire Ties inside the wireways.
☐ No sharp edges on wire ties.
☐ Separation: White duct is used for DC voltages, Gray duct is used for AC voltages.
☐ Ensure wiring duct is not over-full, includes provision for 20% more wiring and the cover may easily be installed. Panduit recommends 50% duct fill, but 40% is a better practice.

PROJECT NAME: ____________________ TEST DATE: ____________
FACILITY NAME: ____________________ TESTED BY: ____________
PROCESS AREA: ____________________ COMPANY: ____________
NETWORK ID: ____________________ PAGE: ____________
WITNESSED BY: ____________________ SIGNATURE: ____________

FACTORY ACCEPTANCE TEST - CONTROL PANELS

1. GENERAL INSPECTION (continued)

C. Interior Inspection (continued)

Wiring

- ☐ Visually check terminals and condition of internal wirings
- ☐ Verify that the control panel has been assembled and wired as designed
- ☐ Verify that all components are operational and perform the functions intended
- ☐ Verify that all components are sized appropriately for the application
- ☐ Verify that equipment control circuits function as intended
- ☐ Back of door wiring is labeled and neatly formed
- ☐ Back panel to door wiring has sufficient bending radius with spiral wrap
- ☐ Wire connection has been verified wired to correct points within the panel
- ☐ Individual wires have been given a pull test to verify a good terminal connection
- ☐ Wire and cable minimum bending radius have not been violated
- ☐ All equipment installed straight and square to back panel
- ☐ Wire colors are correct:
  - ☐ Black and White > AC hot and neutral, respectively
  - ☐ Red > AC control signals
  - ☐ Blue > DC power and control (Blue w/White stripe for DC ground)
  - ☐ Yellow > Foreign voltages (those still present when panel power is disconnected)
  - ☐ Green > AC equipment ground
  - ☐ Black > TSP (+)
  - ☐ White> TSP(-)
- ☐ Analog wiring shields are continuous (connected by a dedicated terminal block for such shields)
- ☐ Analog shield wires are grounded within the panel, where not otherwise grounded at the transmitter itself
- ☐ Discrete inputs are separately fused or protected by a circuit breaker on a “per loop” basis
- ☐ Intrinsic Safety Wiring
  - ☐ Ensure wiring associated with intrinsic safety circuits or intrinsic safety barriers is kept away from all other wiring by UL minimum distances or by a physical (grounded metal) barrier preventing non-intrinsically safe wiring from coming in contact with intrinsically safe circuits or wiring
- ☐ Verify all spare terminals are installed according to the percentage listed in the specifications

Grounding

- ☐ Equipped with “Blackburn” or other grounding type lug
- ☐ Lug is securely fastened to the panel structure
- ☐ Verify Grounding bar is installed
- ☐ Verify Isolated ground bar is installed

PROJECT NAME: ____________________ TEST DATE: ____________

FACILITY NAME: ____________________ TESTED BY: ____________

PROCESS AREA: ____________________ COMPANY: ____________

NETWORK ID: ____________________ PAGE: ____________

WITNESSED BY: ____________________ SIGNATURE: ____________

2. POWER TEST

A. AC Power

☐ AC Power is routed correctly within the panel, and is isolated from DC and network wiring.
☐ All fuses are installed and sized properly.
☐ All breakers are installed and sized properly.
☐ 24 VDC Power Supplies are functional.
☐ 24 VDC Power fail contacts are functional.
☐ 24 VDC power supplies are redundant, and have diode modules enabling the hot swap-over between supplies.
    ☐ 24 VDC supplies are equipped with dry contact failure alarms, wired as PLC inputs to signal failure of any DC power supply. Such alarm inputs to the PLC have been tested as being functional.
☐ Dedicated receptacle is wired to receive a dedicated AC supply.
☐ Verify continuity for all DC commons, ground and AC neutrals.
☐ Verify that the CP temporary input power is connected correctly and is the correct voltage.
☐ Close the CP main circuit breaker(s).
☐ Verify that voltages at subsequent circuit breakers are correct.
☐ Close circuit breakers.
☐ Verify that power feeding interruptible and uninterruptible power supplies is correct.
☐ Turn on power supplies if they are not already on.
☐ Verify that voltages at distribution terminals are correct.
☐ Energize any remaining hardware such as the PLC.

B. Uninterruptible Power Supply (UPS)

☐ Mounted appropriately within the cabinet, on a dedicated shelf, or rear of a swing-out sub panel.
☐ Is equipped with maintenance bypass switch (or at least plug/receptacle means for bypassing the unit).
☐ Test all UPS alarms (on inverter, failure, battery failure etc.)
☐ Turn off the AC power supply and verify that the UPS will be switched on to supply the designated vital loads in the control panel.

3. CONTROLS & AUXILIARY DEVICES TEST

☐ Verify all interposing and auxiliary relays are functioning.

☐ Verify panel lights are functioning.

Ventilation and Heating

☐ If ventilation fans are fitted, check the fans operate correctly any associated air filters are clean and not blocked.
☐ Verify components are installed in the correct orientation for proper air flow.

4. HARDWIRED INTERLOCK AND SAFETY TEST

☐ Verify that hardwired interlocks through the control panel as shown on schematic drawings are functioning. For example, outlet high pressure switch interlock to a pump.
☐ Verify that all hardwired safety devices through the control panel is functioning. For example, the pull cord emergency stops of conveyors.

PROJECT NAME: ______________________ TEST DATE: ______________
FACILITY NAME: ______________________ TESTED BY: ______________
PROCESS AREA: ______________________ COMPANY: ______________
NETWORK ID: ______________________ PAGE: ______________
WITNESSED BY: ______________________ SIGNATURE: ______________

5. PLC TEST

A. Components

☐ PLC interior High Temperature alarm is installed, wired to the PLC, and is shown to be functional.

☐ Relays have transient suppression across their coils. This is particularly important for DC coil relays, where diodes in reverse polarity are often used.

☐ TVSS is installed across the main incoming 120 VAC.

PLC and PLC Rack

- ☐ Verify all cards are securely seated.
- ☐ Ensure clearance around PLC rack has been met, such that convective heat transfer is not impeded by devices erroneously mounted in the “no encroachment” area. Confirm with manufacturer clearance recommendations.

B. PLC I/O Test

☐ Furnish **I/O test forms** and test all the listed input and output points as follows:

- ☐ Discrete Inputs: Simulate a field contact closure by “shorting” across the appropriate terminal blocks. Observe the transition between a logical “0” and “1” in the PLC software.
- ☐ Discrete Outputs: Force the output bit to toggle between logical “0” and logical “1” using the PLC software. Measure contact resistance at the wired terminal blocks using a digital meter selected for the “ohms” setting.
- ☐ Analog Inputs: Connect a signal generator to the appropriate terminal blocks. Tailor the connection depending on whether a 2-wire or 4-wire simulation is required. Modulate the 4-20mA signal. Observe the associated PLC internal memory register to transition between 0-65535 or if scaled in engineering units, between 0 and the maximum scaled engineering unit. The latter method is preferred.
- ☐ Analog Outputs: Force the output register to a value between 0-65535 or 0-100%, if the scaling block can be manipulated. Observe the measured 4-20mA value increment and decrement using a digital ammeter.

C. Redundant Controllers (where required) Test

☐ Remove Communication cable from PLC-1 to verify switching to PLC-1A

☐ Remove Communication cable from PLC-1A to verify switching back to PLC-1

☐ Remove Power from PLC-1 to verify switching to PLC-1A

☐ Remove Power from PLC-1A to verify switching to PLC-1

☐ Remove Communication cable from PLC-1 to I/O rack and verify switching to PLC-1A

☐ Remove Communication cable from PLC -1A to I/O rack and verify switching to PLC-1

D. PLC Control Logic Verification

☐ The PLC control strategy is verified by following the Control Logic Verification Form based on the specifications. Each control strategy will be verified by simulating the process and checking the state or value of PLC outputs. The results of equipment status and alarms and process instrument values and trends shall also be verified on the Plant SCADA graphic screens stored in a temporary SCADA computer. Since all PLC input and output wiring has been verified and some field devices are not available during Factory Acceptance Testing, certain inputs will be simulated either by means of additional hardware and/or software as described below.

- ☐ DI states are either simulated by hardwired switches or forced inputs using a programming terminal.
- ☐ For example, when starters and drives are not provided as part of the contract, jumpers may be installed from the output call relays to the running confirmation inputs to simulate the running state of the motors.
- ☐ AI values are either simulated by an external source or within software using a programming terminal.
- ☐ For example, when a level transducer is not provided as part of the contract the level transducer loop current may be simulated with a loop powered potentiometer and adjusted manually for the level input.

PROJECT NAME: ______________________ TEST DATE: ______________
FACILITY NAME: ______________________ TESTED BY: ______________
PROCESS AREA: ______________________ COMPANY: ______________
NETWORK ID: ______________________ PAGE: ______________
WITNESSED BY: ______________________ SIGNATURE: ______________

FACTORY ACCEPTANCE TEST - CONTROL PANELS

5. PLC TEST (continued)

D. PLC Control Logic Verification (continued)

Typical Fault Logic

☐ If the fault input is high and the disable (if applicable) for the fault is not high and the common disable (if applicable) is not high begin timing. If any of these conditions changes, stop timing and reset the timer. If the timer reaches its preset, activate the alarm output. If the fault alarm is a shutdown alarm stop the associated motor and latch the alarm so that it remains present even if the condition clears.

☐ The fault condition must return to normal and the alarm must be reset for a latched alarm to clear.

Typical Fail to Start Logic

☐ If the motor is called to run (call output high) and no running feedback is received (running input is low) and the fail to start and common alarm disables (if applicable) are not high start timing. If any of these conditions changes, stop timing and reset the timer. If the timer reaches its preset, activate the alarm output, stop calling the motor and latch the alarm.

6. HMI OR OIT TEST

HMI / OIT Functionality

☐ Communication with PLC
☐ Screen Layouts
☐ Screen Navigation
☐ Set Point Entry
☐ Animation
☐ Color Correctness (Green=Run, Red=Off, Amber=Alarm, or the agreed upon convention)
☐ Alarms
☐ Acknowledge and Reset
☐ Security / Access Levels / Passwords

7. NETWORK COMMUNICATION TEST

A. Network Components

☐ Fiber optic cabling terminates in a patch panel
☐ Media converters are installed and functional
☐ Terminating resistors have been installed for trunk/tap topologies or where required
☐ Wire and cable bending limitations have not been violated

B. Networking Functions

☐ Verify data transfer via the network to different PLCs as shown on the Network Block Diagrams
☐ Verify network traffic rate and error margin is acceptable

PROJECT NAME: ______________________ TEST DATE: ______________
FACILITY NAME: ______________________ TESTED BY: ______________
PROCESS AREA: ______________________ COMPANY: ______________
NETWORK ID: ______________________ PAGE: ______________
WITNESSED BY: ______________________ SIGNATURE: ______________

FACTORY ACCEPTANCE TEST - CONTROL PANELS

8. FAT DOCUMENTATION AND RECORD

Panel Documentation

- ☐ As-built panel drawings showing actual panel construction and devices arrangement and c/w Bill of Material.
- ☐ Panel schematic and interconnection drawings.
- ☐ P&ID drawings and schematic drawings for the process area controlled by the panel that is to be tested.
- ☐ I/O list test forms of the process area to be tested.
- ☐ FAT procedure of the process area to be tested.
- ☐ Test record forms of the process area to be tested. Forms shall include area for signature of responsible test personnel.
- ☐ Hard copy of the PLC application program of the process area to be tested.
- ☐ Hard copy of the HMI/OIT graphic screens of the process area to be tested.

9. FAT TOOLS AND SOFTWARE

- ☐ Simulation software if required
- ☐ Digital volt meter Fluke 87
- ☐ Process meter Fluke 787
- ☐ Laptop computer with PLC application program
- ☐ Temporary SCADA computer with HMI software and applicable graphic screens
- ☐ Jumper wires

PROJECT NAME: ______________________ TEST DATE: ____________

FACILITY NAME: ______________________ TESTED BY: ____________

PROCESS AREA: ______________________ COMPANY: ____________

NETWORK ID: ______________________ PAGE: ____________

WITNESSED BY: ______________________ SIGNATURE: ____________

	INSTALLATION AND CERTIFICATION CHECKLIST DOCUMENTATION	

INSTRUMENT LOOP NO. ________________________________

SERVICE DESCRIPTION ________________________________

A COPY OF LATEST ISSUE OF THE FOLLOWING DOCUMENTS ARE INCLUDED IN THIS INSTRUMENT INSTALLATION CERTIFICATION FILE:

☐ INSTRUMENT SPECIFICATION SHEETS (FOR ALL INSTRUMENTS IN THE LOOP)

☐ INSTRUMENT INSTALLATION DETAILS (FOR ALL INSTRUMENTS IN THE LOOP)

☐ INSTRUMENT LOOP WIRING DIAGRAMS

☐ INSTRUMENT INSTALLATION CERTIFICATION CHECKLIST

☐ SIZING CALCULATIONS

☐ INSTRUMENT INSTALLATION SCHEDULE (APPLICABLE PART)

☐ NAMEPLATE SCHEDULE (APPLICABLE PART)

☐ VENDOR LITERATURE CALIBRATION INFORMATION

INSTRUMENT LOOP IS PART OF EQUIPMENT START-UP/SHUTDOWN INTERLOCKS? ☐ No ☐ Yes

REMARKS: ________________________________

____

____

____

____

____

____

____

____

____

CHECKED BY (COMPANY)	________________	ACCEPTED BY (COMPANY)	________________
SIGNATURE	________________	SIGNATURE	________________
DATE	________________	DATE	________________

SWITCHES
INSTALLATION AND CALIBRATION CHECKLIST

INSTRUMENT LOOP NO. ____________________

SERVICE DESCRIPTION ____________________

CHECK BELOW, WHEN COMPLETED:

☐ BENCH CALIBRATED PER SPECIFICATION SHEET NO. ____________________

☐ VERIFIED PER P&ID NO. ____________________

☐ CORRESPONDS TO SPECIFICATION SHEET NO. ____________________

☐ WIRING CORRECT PER INSTRUMENT LOOP DRAWING NO. ____________________

☐ INSTALLATION CORRECT PER DETAIL NO. ____________________

☐ ACCESSORIES ARE PRESENT AND PROPERLY INSTALLED

☐ INSTRUMENT IS ACCESSIBLE FOR MAINTENANCE OR REMOVAL

☐ ENGRAVED LAMINATED NAMEPLATE (NO SPELLING ERRORS) PERMANENTLY INSTALLED

INSTRUMENT LOOP IS PART OF EQUIPMENT START-UP/SHUTDOWN INTERLOCKS? ☐ No ☐ Yes

FIELD CALIBRATION CHECK

CONTACT NO.	FUNCTION	FOR SIGNAL	CONTACT IS TO	AT SPECIFIED VALUE FOR	ACTUAL TRIP POINT WAS
1	☐ ALARM	☐ INCR	☐ OPEN	SET PT =	SET PT =
	☐ S/D PERM	☐ DECR	☐ CLOSE	RESET =	RESET =
2	☐ ALARM	☐ INCR	☐ OPEN	SET PT =	SET PT =
	☐ S/D PERM	☐ DECR	☐ CLOSE	RESET =	RESET =
3	☐ ALARM	☐ INCR	☐ OPEN	SET PT =	SET PT =
	☐ S/D PERM	☐ DECR	☐ CLOSE	RESET =	RESET =
4	☐ ALARM	☐ INCR	☐ OPEN	SET PT =	SET PT =
	☐ S/D PERM	☐ DECR	☐ CLOSE	RESET =	RESET =

NOTE: PERM IS ABBREVIATION FOR PERMISSIVE

	SWITCHES INSTALLATION AND CALIBRATION CHECKLIST	

REMARKS: ______________________________

CHECKED BY (COMPANY) ______________________

ACCEPTED BY (COMPANY) ______________________

SIGNATURE ______________________

SIGNATURE ______________________

DATE ______________________

DATE ______________________

	TRANSMITTER/CONTROLLER/INDICATOR INSTALLATION AND CALIBRATION CHECKLIST	

INSTRUMENT LOOP IS PART OF EQUIPMENT START-UP/SHUTDOWN INTERLOCKS? ☐ No ☐ Yes

INSTRUMENT TYPE ☐ TRANSMITTER ☐ CONTROLLER ☐ INDICATOR

☐ OTHER DESCRIPTION ______

INSTRUMENT TAG NO. ______ SERIAL NO. ______

SERVICE DESCRIPTION ______

BENCH CALIBRATION CHECK

INPUT RANGE = ______

HEAD CORRECTION = ______

CALIBRATED SPAN = ______

OUTPUT RANGE = ______

☐ LINEAR

☐ SQUARE ROOT

% CALIB SPAN	DESIRED VALUE	ACTUAL VALUE	EXPECTED VALUE	ACTUAL VALUE
0				
50				
100				

CHECK BELOW, WHEN COMPLETED:

- ☐ BENCH CALIBRATED PER SPECIFICATION SHEET NO. ______
- ☐ VERIFIED PER P&ID NO. ______
- ☐ CORRESPONDS TO SPECIFICATION SHEET NO. ______
- ☐ WIRING CORRECT PER INSTRUMENT LOOP DRAWING NO. ______
- ☐ INSTALLATION CORRECT PER DETAIL NO. ______
- ☐ ACCESSORIES ARE PRESENT AND PROPERLY INSTALLED
- ☐ INSTRUMENT IS ACCESSIBLE FOR MAINTENANCE OR REMOVAL
- ☐ ENGRAVED LAMINATED NAMEPLATE (NO SPELLING ERRORS) PERMANENTLY INSTALLED

FIELD CALIBRATION CHECK

INPUT RANGE = ______

OUTPUT RANGE = ______

% CALIB SPAN	DESIRED VALUE	ACTUAL VALUE	EXPECTED VALUE	ACTUAL VALUE
0				
50				
100				

	TRANSMITTER/CONTROLLER/INDICATOR INSTALLATION AND CALIBRATION CHECKLIST	

☐ DIRECT ☐ REVERSE

☐ ACTION VERIFIED AT 50% SPAN

☐ ACTION VERIFIED AT ____________ SPAN

CONTROLLER SETTINGS

SETTING	GAIN	PB	RESET (INTEGRAL)	DERIV. (RATE)	HIGH LIMIT	LOW LIMIT	ELEV. ZERO	ZERO SUPP
PRE-TUNE								
POST-TUNE								

PRE-TUNE SETTINGS

	GAIN	PB	RESET (REPEAT/MIN)	RESET (MIN/REPEAT)	DERIVATION (MINUTES)
FLOW	1.0	100	10	0.1	N/A
LEVEL	1.0	100	MIN.	MAX.	N/A
PRESSURE	2.0	50	2.0	0.5	N/A
TEMP.	4.0	25	0.1	10	OFF

REMARKS ____

____

____

____

____

____

____

____

CHECKED BY (COMPANY) ____________________

ACCEPTED BY (COMPANY) ____________________

SIGNATURE ____________________

SIGNATURE ____________________

DATE ____________________

DATE ____________________

	ANALYZERS **INSTALLATION AND CALIBRATION CHECKLIST**	

INSTRUMENT LOOP IS PART OF EQUIPMENT START-UP/SHUTDOWN INTERLOCKS? ☐ No ☐ Yes

TYPE OF INSTRUMENT ____________________

INSTRUMENT TAG NO. ____________________ SERIAL NO. ____________________

SERVICE DESCRIPTION ____________________

CHECK BELOW, IF TRUE

☐ BENCH CALIBRATED PER SPECIFICATION SHEET NO. ____________________

☐ VERIFIED PER P&ID NO. ____________________

☐ CORRESPONDS TO SPECIFICATION SHEET NO. ____________________

☐ WIRING CORRECT PER INSTRUMENT LOOP DRAWING NO. ____________________

☐ INSTALLATION CORRECT PER DETAIL NO. ____________________

☐ ACCESSORIES ARE PRESENT AND PROPERLY INSTALLED

☐ INSTRUMENT IS ACCESSIBLE FOR MAINTENANCE OR REMOVAL

☐ ENGRAVED LAMINATED NAMEPLATE (NO SPELLING ERRORS) PERMANENTLY INSTALLED

REMARKS ____________________

CHECKED BY (COMPANY) ____________________ ACCEPTED BY (COMPANY) ____________________

SIGNATURE ____________________ SIGNATURE ____________________

DATE ____________________ DATE ____________________

	CONTROL VALVES **INSTALLATION AND CALIBRATION CHECKLIST**	

INSTRUMENT LOOP IS PART OF EQUIPMENT START-UP/SHUTDOWN INTERLOCKS? ☐ No ☐ Yes

☐ VALVE TAG NO. ____________ SERIAL NO. ____________

☐ TRANSDUCER TAG NO. ____________ SERIAL NO. ____________

☐ SOLENOID TAG NO. ____________ SERIAL NO. ____________

☐ VOLUME BOOSTER TAG NO. ____________ SERIAL NO. ____________

☐ POSITIONER ____________ SERIAL NO. ____________

SERVICE DESCRIPTION ____________

TRANSDUCER CHECK					
INPUT RANGE =			OUTPUT RANGE =		
CALIBRATED SPAN =			CALIBRATED SPAN =		
BENCH					
SPAN	DESIRED	ACTUAL	SPAN	EXPECTED	ACTUAL
0%			0%		
50%			50%		
100%			100%		
FIELD					
SPAN	DESIRED	ACTUAL	SPAN	EXPECTED	ACTUAL
0%			0%		
50%			50%		
100%			100%		

CHECK BELOW, IF TRUE:

☐ BENCH CALIBRATED PER ABOVE ____________

☐ VERIFIED PER P&ID NO. ____________

☐ CORRESPONDS TO SPECIFICATION SHEET NO. ____________

- ☐ VALVE SPECIFICATION NO. ____________
- ☐ TRANSDUCER SPECIFICATION NO. ____________
- ☐ SOLENOID SPECIFICATION NO. ____________

☐ WIRING CORRECT PER INSTRUMENT LOOP DRAWING NO. ____________

☐ INSTALLATION CORRECT PER INSTRUMENT INSTALLATION DETAILS ____________

- ☐ VALVE DETAIL NO. ____________
- ☐ TRANSDUCER DETAIL NO. ____________
- ☐ SOLENOID DETAIL NO. ____________

	CONTROL VALVES **INSTALLATION AND CALIBRATION CHECKLIST**	

☐ ACCESSORIES ARE PRESENT AND PROPERLY INSTALLED

☐ INSTRUMENT IS ACCESSIBLE FOR MAINTENANCE OR REMOVAL

☐ ENGRAVED LAMINATED NAMEPLATE (NO SPELLING ERRORS) PERMANENTLY INSTALLED

VALVE CHECK			
FLOW CHECK	☐ PROCESS FLOW DIRECTION THROUGH THE VALVE IS CORRECT		
SAFETY CHECK	ON LOSS OF AIR VALVE FAILS ☐ OPEN ☐ CLOSE	ON LOSS OF POWER SOLENOID FAILS ☐ TO VENT ☐ TO VALVE	
TRAVEL CHECK	FULL OPEN AT ______ PSI	FULL CLOSED AT ______ PSI	MEASURED TRAVEL ______ INCHES
SEATING CHECK	☐ ON BENCH ☐ IN-LINE	RESULTS	ACTUATOR BENCH SET

POSITIONER CHECK

VALVE FULL OPEN AT ____________ PSI TO POSITIONER

VALVE FULL CLOSED AT ____________ PSI TO POSITIONER

VOLUME BOOSTER CHECK

BYPASS VALVE (GAIN) ADJUSTING SCREW BACKED OUT ________ TURNS FROM CLOSED TO ENSURE QUICK BUT STABLE OPERATION (TYPICALLY 1-1/2 TO 2 TURNS)

REMARKS ____

CHECKED BY (COMPANY) ______________ ACCEPTED BY (COMPANY) ______________

SIGNATURE ______________ SIGNATURE ______________

DATE ______________ DATE ______________

DEVICENET INSTALLATION TESTING

DeviceNet Network ____________________

Network Installation Characteristics

Architecture

☐ Single Master
or
☐ Multi Master
☐ Redundant Power Supplies
☐ Per Network

Baud Rate

☐ 125 kBaud
☐ 250 kBaud
☐ 500 kBaud

Trunk Media

☐ Thick Round
☐ Thin Round

Drop Media

☐ Thick Round, Unshielded
☐ Thin Round, Shielded
☐ Thick Round, Shielded

Installed Node List

☐ 0 ☐ 1 ☐ 2 ☐ 3 ☐ 4 ☐ 5 ☐ 6 ☐ 7 ☐ 8 ☐ 9 ☐ 10 ☐ 11 ☐ 12 ☐ 13 ☐ 14 ☐ 15
☐ 16 ☐ 17 ☐ 18 ☐ 19 ☐ 20 ☐ 21 ☐ 22 ☐ 23 ☐ 24 ☐ 25 ☐ 26 ☐ 27 ☐ 28 ☐ 29 ☐ 30 ☐ 31
☐ 32 ☐ 33 ☐ 34 ☐ 35 ☐ 36 ☐ 37 ☐ 38 ☐ 39 ☐ 40 ☐ 41 ☐ 42 ☐ 43 ☐ 44 ☐ 45 ☐ 46 ☐ 47
☐ 48 ☐ 49 ☐ 50 ☐ 51 ☐ 52 ☐ 53 ☐ 54 ☐ 55 ☐ 56 ☐ 57 ☐ 58 ☐ 59 ☐ 60 ☐ 61 ☐ 62 ☐ 63

☐ All nodes present and in accordance with network drawings/specifications
☐ ODVA approved devices
☐ Nodes/devices accessible for inspection and maintenance
☐ Nodes/devices properly addressed

Comments: ____________________

____

____

Media Inspection

Trunk Cable

☐ ODVA approved
☐ Labeling complete
☐ Cable/conductor terminations
☐ Terminating resistors at ends

Drop Cable

☐ ODVA approved
☐ Labeling complete
☐ Cable/conductor terminations
☐ Maximum drop length < 20'

Installation

☐ No evidence of physical damage
☐ Installed in protective raceway
☐ Bending radius not exceeded
☐ Cable supports in place
☐ V- and shield are grounded
☐ Clearance from high temperature/voltage sources
☐ No installation subject to vibration

Comments: ____________________

____

____

____

Network Power Supplies

Power Supply Equipment	Supply Source (120 VAC)	Network Power Tap (24 VDC)
☐ ODVA compliant	☐ Overcurrent protection	☐ Overcurrent protection
☐ Quantity and ratings	☐ Conductor size	☐ Conductor size

Comments: ______________________________

____

____

CHECKED BY (COMPANY)	ACCEPTED BY (COMPANY)
SIGNATURE	SIGNATURE
DATE	DATE

PROFIBUS
INSTALLATION QUALIFICATION AND TESTING

General Network Description

The Profibus network serves the RO pretreatment, blended water, and concentrate processes and consists of both DP and PA slave devices. The master is located in programmable logic controller, PLC-900. Profibus DP repeaters are deployed in the network to essentially support a radial network topology from each process control panel.

Network Design Characteristics

ARCHITECTURE

MASTER ☐ SINGLE ☐ REDUNDANT
TOTAL NODE COUNT ≤ 126 ☐
REPEATER COUNT ______________________
CASCADED REPEATER COUNT <9 ______________________
NODE COUNT PER DP SEGMENT <32 ☐
DP/PA SEGMENT COUPLERS ______________________
REDUNDANCY (DP/PA COUPLERS ______________________
ACTIVE TERMINATORS ☐
PROFIBUS DIAGNOSTICS ☐ PA ONLY ☐ DP & PA
SURGE PROTECTION FOR SLAVES LOCATED OUTSIDE ☐
SURGE PROTECTION FOR MEDIA ENTERING THE CONTROLLER CABINET ☐
INTRINSIC SAFETY WIRING: REQUIRED FOR ANY PA NETWORK ☐

BAUD RATE (kbits/sec)

☐ 9.6	☐ 187.5	☐ 3,000
☐ 19.2	☐ 50	☐ 6,000
☐ 93.75	☐ 1,500	☐ 12,000

INSTALLED NODE LIST

☐ 0	☐ 1	☐ 2	☐ 3	☐ 4	☐ 5	☐ 6	☐ 7	☐ 8	☐ 9	☐ 10	☐ 11	☐ 12	☐ 13	☐ 14	☐ 15
☐ 16	☐ 17	☐ 18	☐ 19	☐ 20	☐ 21	☐ 22	☐ 23	☐ 24	☐ 25	☐ 26	☐ 27	☐ 28	☐ 29	☐ 30	☐ 31
☐ 32	☐ 33	☐ 34	☐ 35	☐ 36	☐ 37	☐ 38	☐ 39	☐ 40	☐ 41	☐ 42	☐ 43	☐ 44	☐ 45	☐ 46	☐ 47
☐ 48	☐ 49	☐ 50	☐ 51	☐ 52	☐ 53	☐ 54	☐ 55	☐ 56	☐ 57	☐ 58	☐ 59	☐ 60	☐ 61	☐ 62	☐ 63
☐ 64	☐ 65	☐ 66	☐ 67	☐ 68	☐ 69	☐ 70	☐ 71	☐ 72	☐ 73	☐ 74	☐ 75	☐ 76	☐ 77	☐ 78	☐ 79
☐ 80	☐ 81	☐ 82	☐ 83	☐ 84	☐ 85	☐ 86	☐ 87	☐ 88	☐ 89	☐ 90	☐ 91	☐ 92	☐ 93	☐ 94	☐ 95
☐ 96	☐ 97	☐ 98	☐ 99	☐ 100	☐ 101	☐ 102	☐ 103	☐ 104	☐ 105	☐ 106	☐ 107	☐ 108	☐ 109	☐ 110	☐ 111
☐ 112	☐ 113	☐ 114	☐ 115	☐ 116	☐ 117	☐ 118	☐ 119	☐ 120	☐ 121	☐ 122	☐ 123	☐ 124	☐ 125	**R** 126	**R** 127

☐ ALL NODES PRESENT IN ACCORDANCE WITH NETWORK DESIGN DOCUMENTS.

LEGEND

M MASTER NODE PRESENT AT THIS ADDRESS
D PROFIBUS DP NODE PRESENT AT THIS ADDRESS
P PROFIBUS PA NODE PRESENT AT THIS ADDRESS
R RESERVED ADDRESS
☐ NO DEVICE PRESENT AT THIS ADDRESS

COMMENTS *(Comments referenced by number. Refer to the Comments, Observations, and Recommendations Summary.)*

PROJECT NAME: ______________________ TEST DATE: ______________
FACILITY NAME: ______________________ TESTED BY: ______________
PROCESS AREA: ______________________ COMPANY: ______________
NETWORK ID: ______________________ PAGE: ______________
WITNESSED BY: ______________________ SIGNATURE: ______________

PROFIBUS
INSTALLATION QUALIFICATION AND TESTING

Media Inspection

CABLING	DP NETWORK	PA NETWORK SEGMENTS			
PI COMPLIANT	☐	☐	☐	☐	☐
LABELING COMPLETE	☐	☐	☐	☐	☐
GROUNDING	☐	☐	☐	☐	☐
CABLE AND CONDUCTOR TERMINATIONS	☐	☐	☐	☐	☐
NO STUB LINES (DP ONLY)	☐	☐	☐	☐	☐
TERMINATING RESISTORS (IN PLACE)	☐	☐	☐	☐	☐
DEDICATED DIAGNOSTICS BUS	☐	☐	☐	☐	☐
INSTALLATION					
NO EVIDENCE OF PHYSICAL DAMAGE	☐	☐	☐	☐	☐
INSTALLATION IN PROTECTIVE RACEWAY	☐	☐	☐	☐	☐
CLEARANCES FROM HIGH TEMPERATURE SOURCES	☐	☐	☐	☐	☐
CLEARANCES FROM HIGH VOLTAGE SOURCES	☐	☐	☐	☐	☐
BEND RADIUS	☐	☐	☐	☐	☐
NO INSTALLATION SUBJECT TO VIBRATION, SHOCK, HIGH FLEX, CHEMICALS, OR MOISTURE	☐	☐	☐	☐	☐
TERMINATING RESISTORS TURNED ON AT CORRECT LOCATION	☐	☐	☐	☐	☐

COMMENTS *(Comments referenced by number. Refer to the Comments, Observations, and Recommendations Summary.)*

Device Inspection

DEVICE QUANTITY/TYPE	INSTALLATION
☐ TOTAL SLAVE COUNT	☐ NO EVIDENCE OF PHYSICAL DAMAGE
☐ MOST UPDATED DEVICE DRIVER INSTALLED?	☐ ACCESSIBLE FOR INSPECTION AND MAINTENANCE
☐ INSTALLED DEVICES COMPLY WITH DRAWINGS AND SPECIFICATIONS	☐ FDT COMPLIANT DEVICES
☐ PI COMPLIANCE DEVICES	
☐ DIAGNOSTICS MODULE INSTALLED	

COMMENTS *(Comments referenced by number. Refer to the Comments, Observations, and Recommendations Summary.)*

Power Supplies

ACTIVE TERMINATIONS	COUPLERS	REPEATERS
☐ SOURCE LOCATION	☐ SOURCE LOCATION	☐ SOURCE LOCATION
☐ OVERCURRENT PROTECTION	☐ OVERCURRENT PROTECTION	☐ OVERCURRENT PROTECTION
☐ CONDUCTOR SIZE	☐ CONDUCTOR SIZE	☐ CONDUCTOR SIZE
☐ GROUNDING	☐ GROUNDING	☐ GROUNDING

COMMENTS *(Comments referenced by number. Refer to the Comments, Observations, and Recommendations Summary.)*

PROJECT NAME: ____________________ TEST DATE: ____________

FACILITY NAME: ____________________ TESTED BY: ____________

PROCESS AREA: ____________________ COMPANY: ____________

NETWORK ID: ____________________ PAGE: ____________

WITNESSED BY: ____________________ SIGNATURE: ____________

PROFIBUS
INSTALLATION QUALIFICATION AND TESTING

DP Network Media Testing

DESCRIPTION	SEGMENT ID											
TRUNK LENGTH (feet)												
ALLOWABLE TRUNK LENGTH AT SPECIFIED DATA RATE:												
MEASURED TRUNK LENGTH:												
SPARE TRUNK LENGTH												
RESISTANCE MEASUREMENTS (ohms)												
NETWORK CABLE: NO TERMINATIONS												
ONE TERMINATION												
TWO TERMINATIONS												
POWER SUPPLY VOLTAGE (volts DC)												
ACTIVE TERMINATOR												
REPEATER CP1100-RPT1												
REPEATER CP1000-RPT1												
REPEATER CP1000-RPT2												
REPEATER CP2700-RPT1												
CABLE TEXTS	**PASS**	**FAIL**	**PASS**	**FAIL**	**PASS**	**FAIL**	**PASS**	**FAIL**	**PASS**	**FAIL**	**PASS**	**FAIL**
TESTED FOR SHORT CIRCUIT BETWEEN SIGNAL LINES	☐	☐	☐	☐	☐	☐	☐	☐	☐	☐	☐	☐
TESTED FOR SHORT CIRCUIT BETWEEN SIGNAL LINES AND SHIELD	☐	☐	☐	☐	☐	☐	☐	☐	☐	☐	☐	☐
TESTED FOR SHIELD CONTINUITY	☐	☐	☐	☐	☐	☐	☐	☐	☐	☐	☐	☐
TESTED FOR OPEN SIGNAL LINES	☐	☐	☐	☐	☐	☐	☐	☐	☐	☐	☐	☐
TESTED FOR CROSSED SIGNAL LINES	☐	☐	☐	☐	☐	☐	☐	☐	☐	☐	☐	☐
TESTED FOR CORRECT TERMINATOR POSITION	☐	☐	☐	☐	☐	☐	☐	☐	☐	☐	☐	☐
CORRECT CABLE TYPE AND LENGTH	☐	☐	☐	☐	☐	☐	☐	☐	☐	☐	☐	☐
TESTED FOR SECURE AND TIGHT CONNECTORS	☐	☐	☐	☐	☐	☐	☐	☐	☐	☐	☐	☐

COMMENTS *(Comments referenced by number. Refer to the Comments, Observations, and Recommendations Summary.)*

PROJECT NAME: ____________________ TEST DATE: ____________

FACILITY NAME: ____________________ TESTED BY: ____________

PROCESS AREA: ____________________ COMPANY: ____________

NETWORK ID: ____________________ PAGE: ____________

WITNESSED BY: ________________ SIGNATURE: ________________

POLK COUNTY
LAKELAND, FL

GIBSON OAKS WATER PRODUCTION FACILITY

APPENDIX A

BID SET

JULY 2020

PCU PROJECT No. 2014-4-30-0
ORACLE No. 6857014

CA No. 8571

CivilSurv Design Group, Inc.
2525 Drane Field Rd.
Suite 7
Lakeland, FL 33811
Tel: 863-646-4771

Certificate of
Authorization
No. 28988

{ARCHITECTURE}
ROI SOLUTIONS.

110 South Kentucky Ave.
Lakeland, Florida 33801
863.687.3573
wmb-roi.com
Corp Lic. No
AAC001185

POLK COUNTY

GIBSON OAKS WATER PRODUCTION FACILITY

BID SET

APPENDIX A1

ENVIRONMENTAL RESOURCE PERMIT

FLORIDA DEPARTMENT OF
Environmental Protection

Southwest District Office
13051 North Telecom Parkway #101
Temple Terrace, Florida 33637-0926

Ron DeSantis
Governor

Jeanette Nuñez
Lt. Governor

Noah Valenstein
Secretary

November 14, 2019

Polk County Utilities
c/o John Howle, CivilSurv Design Group, Inc.
2525 Drane Field Road, Suite 7
Lakeland, FL 33811
jhowlecivilsurv.com

Dear Mr. Addison:

Enclosed is the Environmental Resource Permit, DEP Project No. 53-0380840-001-EI, issued pursuant to Part IV of Chapter 373, Florida Statutes, and Title 62, Florida Administrative Code.

Appeal rights for you and for any affected third party are described in the text of the permit along with conditions that must be met when authorized activities are undertaken.

You, as the applicant, are responsible for all aspects of permit compliance. You should therefore review this permit document carefully to ensure compliance with the general conditions and specific conditions contained herein.

Please be aware of permit General Condition number 4, which states, “At least 48 hours prior to beginning the authorized activities, the permittee shall submit to the Agency a fully executed Form 62-330.350(1), “Construction Commencement Notice”.”

If you have any questions about this document, please contact me at garrett.christ@floridadep.gov or (813) 470-5751.

Thank you for your participation in the permit process and in managing the natural resources of the State of Florida.

Sincerely,

Garrett Christ
Environmental Specialist
Permitting and Waste Cleanup Program

cc: Garrett Christ, Southwest District, garrett.christ@floridadep.gov
ERP Permitting, Southwest District, sw_erp@floridadep.gov
Mark Addison, Polk County Utilities, markaddison@polk-county.net

Enclosure: Environmental Resource Permit with Attachments (31 pages)

FLORIDA DEPARTMENT OF
Environmental Protection

Southwest District Office
13051 North Telecom Parkway #101
Temple Terrace, Florida 33637-0926

Ron DeSantis
Governor

Jeanette Nuñez
Lt. Governor

Noah Valenstein
Secretary

Permittee/Authorized Entity:
Polk County Utilities
c/o Mark Addison
1101 Jim Keene Blvd
Winter Haven, FL 33880

Gibson Oaks Water Production Facility

Authorized Agent:
CivilSurv Design Group, Inc.
c/o John Howle
2525 Drane Field Rd
Lakeland, FL 33811

Individual Environmental Resource Permit

State-owned Submerged Lands Authorization – Not Required

U.S. Army Corps of Engineers Authorization – Not Approved

Permit No.: 53-0380840-001-EI

Permit Issuance Date: November 14, 2019
Permit Construction Phase Expiration Date: November 14, 2024

FLORIDA DEPARTMENT OF
Environmental Protection

Southwest District Office
13051 North Telecom Parkway #101
Temple Terrace, Florida 33637-0926

Ron DeSantis
Governor

Jeanette Nuñez
Lt. Governor

Noah Valenstein
Secretary

Environmental Resource Permit

Permittee: Polk County Utilities
Permit No: 53-0380840-001-EI

PROJECT LOCATION

The activities authorized by this permit are located at 8251 Tom Costine Road, Lakeland, Florida 33809, in Sections 02, 10 and 11, Township 27 South, Range 18 East in Polk County, at lat/long 28^{o}9’44.37”, -82^{o}28’46.87”.

PROJECT DESCRIPTION

This permit authorizes the construction activities for the stormwater management system (SWMS) associated with the water production facility (WPF).

The property parcel is a total of 40 acres with 3.60 acres being used as the total project area. The SWMS will consist of an online wet detention pond that will receive the stormwater runoff from the 1.64 acres of impervious area of the WPF. To the North and West of the property are two offsite linear swale systems respectively that will allow the offsite runoff to continue their pre-existing conditions.

The project is located in the Gator Creek watershed which eventually leads to the Withlacochee River. The water quality analysis demonstrated that 0.5 inch over the post development project area (3.60 acres) met the presumptive water quality criteria.

Control structures within the pond have been designed to attenuate peak discharge rates up to the 25-year/24-hour design storm event. The SWMS is designed to recover the total treatment volume within 72 hours. No net loss or other adverse impacts to the floodplain are proposed or authorized. Authorized activities are depicted on the attached exhibits.

AUTHORIZATIONS

Environmental Resource Permit

The Department has determined that the activity qualifies for an Environmental Resource Permit. Therefore, the Environmental Resource Permit is hereby granted, pursuant to Part IV of Chapter 373, Florida Statutes (F.S.), and Chapter 62-330, Florida Administrative Code (F.A.C.).

Sovereignty Submerged Lands Authorization

As staff to the Board of Trustees of the Internal Improvement Trust Fund (Board of Trustees), the Department has determined the activity is not on submerged lands owned by the State of Florida. Therefore, your project is not subject to the requirements of Chapter 253, F.S., or Rule 18-21, F.A.C.

Federal Authorization

Your proposed activity as outlined on your application and attached drawings **does not qualify** for Federal authorization pursuant to the State Programmatic General Permit and a **SEPARATE permit** or authorization

shall be required from the Corps. You must apply separately to the Corps using their APPLICATION FOR DEPARTMENT OF THE ARMY PERMIT, ENG FORM 4345, or alternative as allowed by their regulations. More information on Corps permitting may be found online in the Jacksonville District Regulatory Division Source Book at: https://www.saj.usace.army.mil/Missions/Regulatory/Source-Book.

Authority for review - an agreement with the USACOE entitled “Coordination Agreement Between the U. S. Army Corps of Engineers (Jacksonville District) and the Florida Department of Environmental Protection (or Duly Authorized Designee), State Programmatic General Permit”, Section 10 of the Rivers and Harbor Act of 1899, and Section 404 of the Clean Water Act.

Coastal Zone Management
Issuance of this authorization also constitutes a finding of consistency with Florida's Coastal Zone Management Program, as required by Section 307 of the Coastal Zone Management Act.
Water Quality Certification
This permit also constitutes a water quality certification under Section 401 of the Clean Water Act, 33 U.S.C. 1341

Other Authorizations
You are advised that authorizations or permits for this activity may be required by other federal, state, regional, or local entities including but not limited to local governments or municipalities. This permit does not relieve you from the requirements to obtain all other required permits or authorizations.

The activity described may be conducted only in accordance with the terms, conditions and attachments contained in this document. Issuance and granting of the permit and authorizations herein do not infer, nor guarantee, nor imply that future permits, authorizations, or modifications will be granted by the Department.

PERMIT CONDITIONS

The activities described must be conducted in accordance with:

- **The Specific Conditions**
- **The General Conditions**
- **The limits, conditions and locations of work shown in the attached drawings**
- **The term limits of this authorization**

You are advised to read and understand these conditions and drawings prior to beginning the authorized activities, and to ensure the work is conducted in conformance with all the terms, conditions, and drawings herein. If you are using a contractor, the contractor also should read and understand these conditions and drawings prior to beginning any activity. Failure to comply with these conditions, including any mitigation requirements, shall be grounds for the Department to revoke the permit and authorization and to take appropriate enforcement action. Operation of the facility is not authorized except when determined to be in conformance with all applicable rules and this permit, as described.

SPECIFIC CONDITIONS

1. Submittals required herein for compliance (e.g. as-built drawings, etc.) shall be submitted electronically (via e-mail, CD or DVD, or through a file transfer site) when practicable and shall include the permittee's name and permit number (53-0380840-001-EI). Email submittals shall be sent to SW_ERP@floridadep.gov with a subject line of “Compliance: Permit Number 53-0380840-001-EI”, or by mail to:

Department of Environmental Protection
Southwest District
ATTN: Compliance Assurance (ERP)
13051 North Telecom Parkway, Suite 101
Temple Terrace, FL 33637-0926

The structure/work authorized by this permit shall not be placed/conducted on any property, other than that owned by the permittee, without the prior written approval of that property owner.

2. In the event the permittee files for bankruptcy prior to completion of work permitted and required by this permit, the permittee must notify the Department within 30 days of filing. The notification shall identify the bankruptcy court and case number and shall include a copy of the bankruptcy petition.

SPECIFIC CONDITIONS – PRIOR TO ANY CONSTRUCTION

3. Prior to construction, the limits of impact shall be clearly marked in a way which is visible and obvious to anyone performing work on-site, including someone operating heavy equipment. Orange construction fence or tall flagged stakes along the construction limits are possible methods.

4. Best management practices for erosion control shall be implemented prior to construction commencement and shall always be maintained during construction to prevent siltation and turbid discharges in excess of State water quality standards pursuant to Rule 62-302, F.A.C. Methods may include, but are not limited to, the use of staked hay bales, staked filter cloth, sodding, seeding, staged construction and the installation of turbidity screens around the immediate project site. Erosion control methods shall be implemented as depicted on Sheet 00GC01 in the attached permit drawings.

5. Prior to initiation of any work authorized by this permit, all wetlands and surface waters outside the specific limits of construction authorized by this permit shall be protected from erosion, siltation, sedimentation, and/or scouring, including the placement of staked erosion control devices around the project area and staging area(s) that are located outside of any authorized impact areas.

SPECIFIC CONDITIONS – CONSTRUCTION ACTIVITIES

6. Areas of exposed soils shall be isolated from wetlands or other surface waters to prevent erosion and deposition of these soils into wetlands or other surface waters during permitted activities.

7. The permittee shall maintain a 50-foot buffer between all project areas and wetlands, as indicated on the attached plans.

8. The permittee shall be responsible for ensuring erosion control devices/procedures are inspected and maintained daily during all phases of construction authorized by this permit until areas disturbed during construction are sufficiently stabilized to prevent erosion, siltation, and turbid discharges.

9. Staked filter cloth shall be positioned at the edge of the permitted fill slopes adjacent to wetlands to prevent turbid run-off and erosion.

10. Grass seed, or sod shall be installed and maintained on exposed slopes and disturbed soil areas within 48 hours of completing final grade, and at other times as necessary, to prevent erosion, sedimentation or turbid discharges into waters of the state and adjacent wetlands. A vegetative cover that stabilizes and prevents erosion of the fill material shall be established within 60 days of sodding or seeding.

Turbidity barriers/erosion control devices shall be removed upon establishment of a substantial vegetative cover.

11. Wetland areas or waterbodies that are outside the specific limits of construction authorized by this permit, must be protected from erosion, sedimentation, siltation, scouring, excess turbidity, and/or dewatering. There shall be no discharge in violation of the water quality standards in Chapter 62-302, F.A.C. Turbidity/erosion controls shall be installed prior to clearing, excavation or placement of fill material, shall be maintained until construction is completed, disturbed areas are stabilized, and turbidity levels have fallen to less than 29 NTU's above background. The turbidity and erosion control devices shall be removed within 14 days once these conditions are met.

12. The littoral zone of the new wet detention pond shall be constructed according to the following criteria:
    a. The littoral zone shall be gently sloped (4:1 Horizontal: Vertical or flatter).
    b. The littoral zone shall be planted with aquatic and wetland vegetation suitable for the specific anticipated hydroperiod of the pond.
    c. Within 24 months of completion of the system, the littoral zone shall consist of 80 percent coverage with suitable aquatic and wetland vegetation.
    d. The littoral zones shall be stabilized by either mulching or other means to ensure the stability of the native plants and soils.

13. The littoral zone shall be inspected to ensure that the 80 percent coverage of suitable aquatic and wetland vegetation within 24 months of system completion criteria is met. If necessary, additional planting shall be conducted to meet success criteria.

14. If utilizing wetland topsoil as an alternative to planting portions of the littoral zone, the wetland topsoil shall be at least four inches in depth.

15. If utilizing wetland topsoil as an alternative to planting portions of the littoral zone, the portion of the littoral zone within 25 feet of the inlet and outlet structures shall be planted with suitable aquatic and wetland vegetation

16. The wet detention area shall be inspected periodically for debris and trash built up around the discharge structures. Accumulations of debris and trash that negatively affect the function of the system shall be removed upon discovery.

17. Unauthorized impacts to wetlands resulting from authorized construction shall be reported to the Department within 24 hours.

18. This permit does not authorize the installation of water, sewer, cable or utility lines within wetlands or waterbodies.

19. Storage or stockpiling of tools and materials (i.e., lumber, pilings, debris) within wetlands or other surface waters is prohibited.

20. Excavation of stormwater management areas is limited to permitted design specifications as depicted on Sheet 00C03 of the attached permit drawings. If limestone bedrock is encountered during construction, the permittee shall notify the Department immediately and shall cease construction in the affected area. The permittee shall submit a design revision to the Department for review and approval that will demonstrate compliance with Rule 5.4.1.b. of the SWFWMD Applicant's Handbook, Volume II prior to proceeding with construction.

21. The permittee shall notify the Department of any sinkhole development in the stormwater management system within 24 hours after discovery and must submit a detailed sinkhole evaluation and repair plan for Department approval within 30 days of discovery.

22. The authorized stormwater management system shall be completed prior to or simultaneously with associated upland development.

SPECIFIC CONDITIONS- CONSTRUCTION COMPLETION

23. The permittee shall submit one set of signed, dated and sealed as-built drawings to the Department via email at SW_ERP@dep.state.fl.us for review and approval within 30 days of completion of construction. (Please contact the Department for files that are too large to email for alternative means of submitting electronically.) The as-built drawings shall be based on the Department permitted construction drawings and any pertinent specific conditions, which should be revised to reflect changes made during construction. Both the original design and constructed elevations must be clearly shown. The plans must be clearly labeled as "as-built" or "record" drawings. Surveyed dimensions and elevations required shall be verified and signed, dated and sealed by a Florida registered professional. *As-builts shall be submitted to the Department regardless of whether deviations are present or not. In addition, the permittee shall submit the "As-Built Certification and Request for Conversion to Operation Phase" form (Ch. 62-330.310(1), F.A.C.); as required in General Condition #6.*

    The following information shall be verified on the as-built drawing from the engineering drawings signed and sealed by Dwayne R.Kreidler, P.E., #54579, on

Plan View/Cross Section Name	Drawing Number(s)
Paving, Grading & Stormwater Plan	00C04 – 00C08
Paving, Grading & Stormwater Details	00GC01 – 00GC02
Leach Field Layout and Details	00GC03

SPECIFIC CONDITIONS – OPERATION AND MAINTENANCE ACTIVITIES

24. Retention areas are intended to become dry within 72 hours after a rainfall event. A system that is regularly wet shall not be considered in compliance with this permit and possible modifications to the system may be required.

25. All retention areas, from the point at which they receive runoff from the project area and through their entire downstream length, shall be well maintained and stabilized to ensure that they are not subject to erosion.

26. The permitted SWMS shall only be used for the purpose of controlling surface water runoff from the site and shall not be used to dispose of or store any solid/liquid waste or products generated or used during operation or construction of the facility.

27. Required inspections by the permittee.

    a. The stormwater system shall be inspected periodically for accumulation of debris and trash. Accumulations of debris and trash that negatively affect the function of the system shall be removed upon discovery.

b. The stormwater system shall be inspected periodically for silt accumulation. Accumulations of silt that negatively affect the function of the system shall be removed.

28. The SWMS shall be inspected by a registered professional to evaluate whether the system is functioning as designed and permitted. Percolation performance should specifically be addressed. The registered professional may record his or her inspection on Form No. 62-330.311(1), Operation and Maintenance Inspection Certification or may provide his evaluation in any other format; however, any report must be signed and sealed by the registered professional. Submittal of the inspection report to the Department is not required; but the report shall be made available to the Department upon request. Inspections shall be made by the registered professional in accordance with this schedule:

a. On the first anniversary of the date of conversion to Operation and Maintenance Phase.

b. Every fifth year on the anniversary of conversion to Operation and Maintenance phase, after the first year of successful operation.

29. Within 30 days of any failure of a SWMS or deviation from the permit, a report shall be submitted to the Department on Form 62-330.311(1), Operation and Maintenance Inspection Certification, describing the remedial actions taken to resolve the failure of deviation. This report shall be signed and sealed by a registered professional.

30. Once project construction has been deemed complete, including the re-stabilization of all side slopes, embankments, and other disturbed areas, and before the transfer to the Operation and Maintenance phase, all obsolete erosion control materials shall be removed.

31. The permittee shall be responsible for keeping records documenting that relevant permit conditions are met. This documentation shall include, at a minimum, the date of each inspection, the name and qualifications of the inspector, any maintenance actions taken, and a determination by the inspector as to whether the system is operating as intended. Inspection documentation must be readily available and shall be provided at the Department's request. Submittal of the inspection documentation to the Department is not required.

NOTICE OF RIGHTS

This action is final and effective on the date filed with the Clerk of the Department unless a petition for an administrative hearing is timely filed under Sections 120.569 and 120.57, F.S., before the deadline for filing a petition. On the filing of a timely and sufficient petition, this action will not be final and effective until further order of the Department. Because the administrative hearing process is designed to formulate final agency action, the hearing process may result in a modification of the agency action or even denial of the application.

Petition for Administrative Hearing

A person whose substantial interests are affected by the Department’s action may petition for an administrative proceeding (hearing) under Sections 120.569 and 120.57, F.S. Pursuant to Rule 28-106.201, F.A.C., a petition for an administrative hearing must contain the following information:

(a) The name and address of each agency affected and each agency’s file or identification number, if known;

(b) The name, address, any email address, any facsimile number, and telephone number of the petitioner; the name, address, and telephone number of the petitioner’s representative, if any, which shall be the address for service purposes during the course of the proceeding; and an explanation of how the petitioner's substantial interests are or will be affected by the agency determination;

(c) A statement of when and how the petitioner received notice of the agency decision;

(d) A statement of all disputed issues of material fact. If there are none, the petition must so indicate;

(e) A concise statement of the ultimate facts alleged, including the specific facts that the petitioner contends warrant reversal or modification of the agency's proposed action;

(f) A statement of the specific rules or statutes that the petitioner contends require reversal or modification of the agency's proposed action, including an explanation of how the alleged facts relate to the specific rules or statutes; and

(g) A statement of the relief sought by the petitioner, stating precisely the action that the petitioner wishes the agency to take with respect to the agency's proposed action.

The petition must be filed (received by the Clerk) in the Office of General Counsel of the Department at 3900 Commonwealth Boulevard, Mail Station 35, Tallahassee, Florida 32399-3000. Also, a copy of the petition shall be mailed to the applicant at the address indicated above at the time of filing.

Time Period for Filing a Petition

In accordance with Rule 62-110.106(3), F.A.C., petitions for an administrative hearing by the applicant must be filed within 21 days of receipt of this written notice. Petitions filed by any persons other than the applicant, and other than those entitled to written notice under Section 120.60(3), F.S., must be filed within 21 days of publication of the notice or within 21 days of receipt of the written notice, whichever occurs first. Under Section 120.60(3), F.S., however, any person who has asked the Department for notice of agency action may file a petition within 21 days of receipt of such notice, regardless of the date of publication. The failure to file a petition within the appropriate time period shall constitute a waiver of that person's right to request an administrative determination (hearing) under Sections 120.569 and 120.57, F.S., or to intervene in this proceeding and participate as a party to it. Any subsequent intervention (in a proceeding initiated by another party) will be only at the discretion of the presiding officer upon the filing of a motion in compliance with Rule 28-106.205, F.A.C.

Extension of Time

Under Rule 62-110.106(4), F.A.C., a person whose substantial interests are affected by the Department's action may also request an extension of time to file a petition for an administrative hearing. The Department may, for good cause shown, grant the request for an extension of time. Requests for extension of time must be filed with the Office of General Counsel of the Department at 3900 Commonwealth Boulevard, Mail Station 35, Tallahassee, Florida 32399-3000, before the applicable deadline for filing a petition for an administrative hearing. A timely request for extension of time shall toll the running of the time period for filing a petition until the request is acted upon.

Mediation

Mediation is not available in this proceeding.

FLAWAC Review

The applicant, or any party within the meaning of Section 373.114(1)(a) or 373.4275, F.S., may also seek appellate review of this order before the Land and Water Adjudicatory Commission under Section 373.114(1) or 373.4275, F.S. Requests for review before the Land and Water Adjudicatory Commission must be filed with the Secretary of the Commission and served on the Department within 20 days from the date when this order is filed with the Clerk of the Department.

Judicial Review

Once this decision becomes final, any party to this action has the right to seek judicial review pursuant to Section 120.68, F.S., by filing a Notice of Appeal pursuant to Rules 9.110 and 9.190, Florida Rules of Appellate Procedure, with the Clerk of the Department in the Office of General Counsel, 3900 Commonwealth Boulevard, M.S. 35, Tallahassee, Florida 32399-3000; and by filing a copy of the Notice of Appeal accompanied by the applicable filing fees with the appropriate District Court of Appeal. The Notice of Appeal must be filed within 30 days from the date this action is filed with the Clerk of the Department.

Executed in Hillsborough County, Florida.

STATE OF FLORIDA DEPARTMENT
OF ENVIRONMENTAL PROTECTION

Pamala Vazquez
Program Administrator
Permitting and Waste Cleanup Program
Southwest District

Attachments:
Figure 1 - Project Drawings and Design Specs (24 pages)
Figure 2 - Request to Transfer Permit/Form 62-330.340 (2 pages)
Figure 3 - Construction Commencement Notice/Form 62-330.350(1) (1 page)
Figure 4 - As-built Certification and Request for Conversion to Operational Phase/ Form 62-330.310 (3 pages)
Figure 5 - Request to Transfer to the Perpetual Operation Entity/Form 62-330.310(2) (1 page)

Copies furnished to:
Garrett Christ, Southwest District, Garrett.Christ@floridadep.gov
ERP Permitting, Southwest District, sw_erp@floridadep.gov
Mark Addison, Polk County Utilities, markaddison@polk-county.net
Jim Tully, Polk County Utilities, jamestully@polk-county.net

CERTIFICATE OF SERVICE

The undersigned hereby certifies that this permit, including all copies, were mailed before the close of business on **November 14, 2019,** to the above listed persons.

FILING AND ACKNOWLEDGMENT

FILED, on this date, under 120.52(7) of the
Florida Statutes, with the designated Department Clerk,
receipt of which is hereby acknowledged.

	November 14, 2019
Clerk	**Date**

$$$$DATE$$$$

$$$$USER$$$$

$$$$PLOT_INFO$$$$

POLK COUNTY UTILITIES INFRASTRUCTURE MANAGEMENT
POLK COUNTY, FLORIDA
UTILITIES COMMUNITY INVESTMENT PROGRAM
GIBSON OAKS WATER PRODUCTION FACILITY

POLK
COUNTY

RANGE 24, TOWNSHIP 27, SECTION 242407
PARCEL ID # 242707000000024000
PCU PROJECT # 2014-4-30-0
ORACLE PROJECT # 6857014

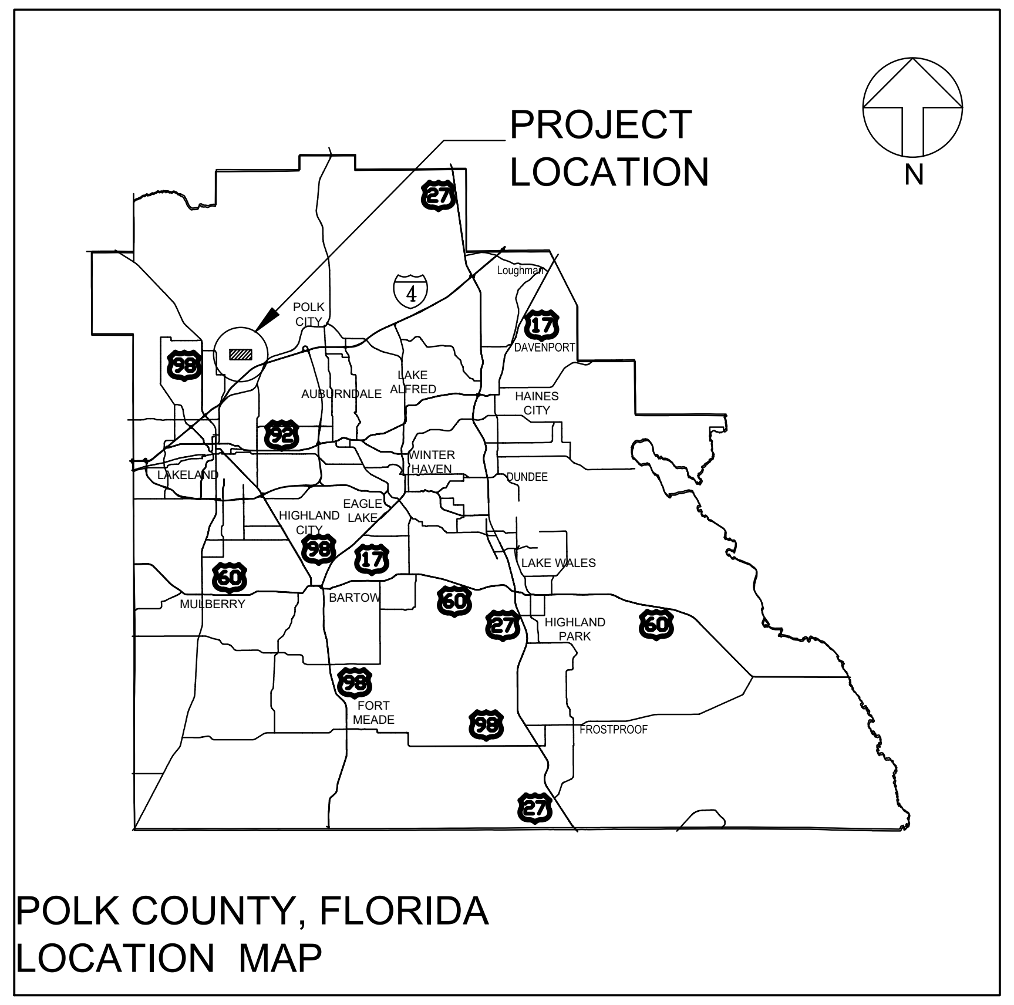

POLK COUNTY, FLORIDA
LOCATION MAP

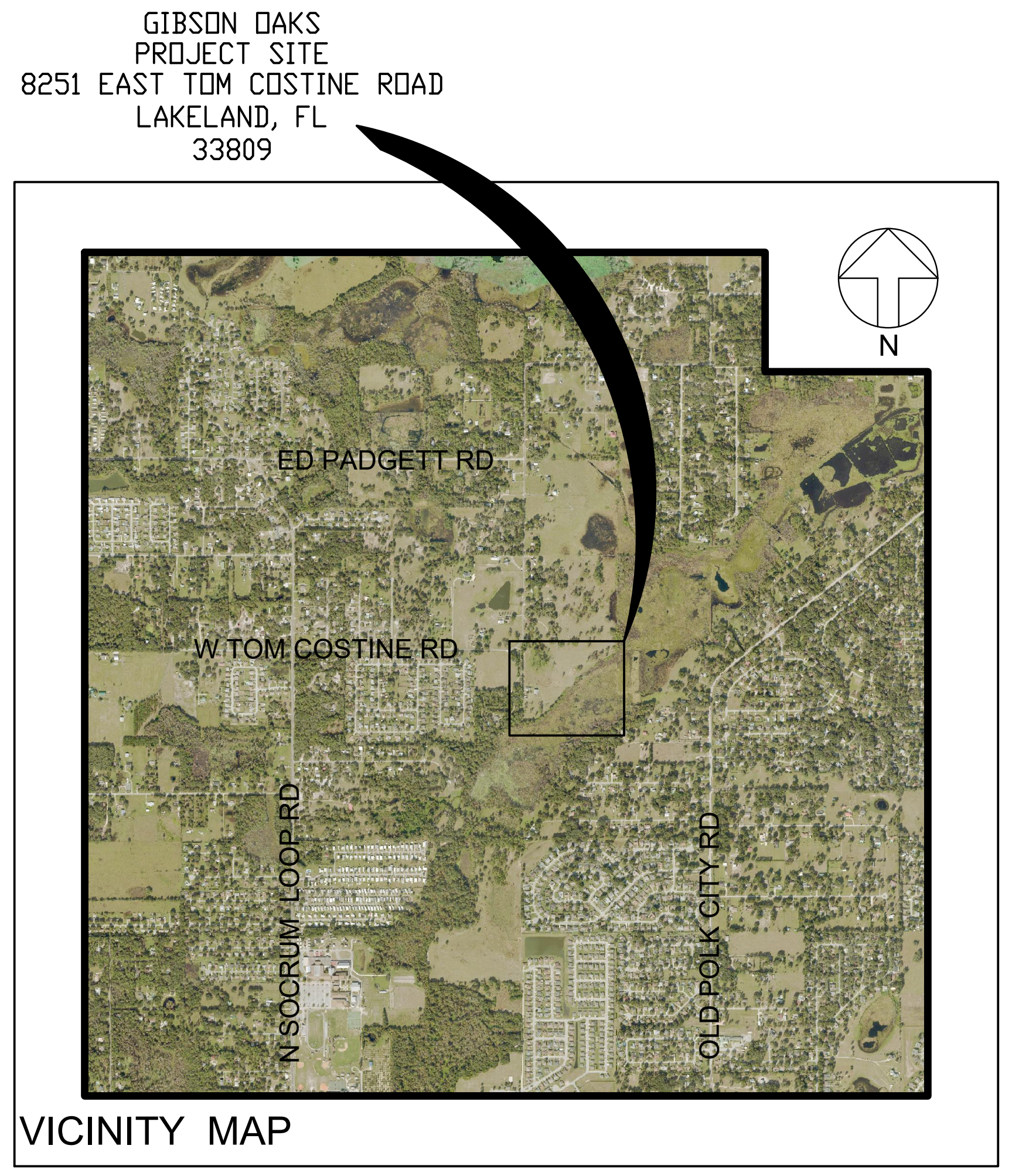

VICINITY MAP

carollo
200 East Robinson Street, Suite1400
Orlando, FL 32801
Phone (407) 478-4642
CA No. 8571

CIVILSURV
A Tradition of Innovative Engineering
CivilSurv Design Group, Inc.
2525 Drane Field Rd.
Suite 7
Lakeland, FL 33811
Tel: 863-646-4771
Certificate of
Authorization
No. 28988

WMB
(ARCHITECTURE)
ROI SOLUTIONS.
110 South Kentucky Ave.
Lakeland, Florida 33801
863.687.3573
wmb-roi.com
Corp. Lic. No.
AAC001165

INDEX OF DRAWINGS

SHEET NO.	GENERAL	
1	00G01	COVER SHEET
2	00G02	GENERAL NOTES
3	00G03	FLOW SCHEMATIC
4	00G04	KEY MAP
	CIVIL	
5	00C01	EXISTING SITE PLAN - GIBSON OAKS
6	00C02	DEMOLITION PLAN - GIBSON OAKS
7	00C03	NEW SITE KEY PLAN - GIBSON OAKS
8	00C04	PAVING GRADING AND STORMWATER PLAN
9	00C05	PAVING GRADING AND STORMWATER PLAN
10	00C06	PAVING GRADING AND STORMWATER PLAN
11	00C07	PAVING GRADING AND STORMWATER PLAN
12	00C08	PAVING GRADING AND STORMWATER PLAN
13	00C09	YARD PIPING - GIBSON OAKS
14	00C10	YARD PIPING - GIBSON OAKS
15	00C11	YARD PIPING - CONFLICT TABLE
16	00GC01	PAVING GRADING AND STORMWATER DETAILS
17	00GC02	PAVING GRADING AND STORMWATER DETAILS
18	00GC03	LEACH FIELD LAYOUT AND DETAILS
19	00GC04	STORMWATER POLLUTION PREVENTION PLAN
20	00GM01	DETAILS I
21	00GM02	DETAILS II
22	00GM03	DETAILS III
23	00GM04	DETAILS IV
24	00GM05	DETAILS V

RESERVED FOR
COUNTY APPROVALS

DEP WATER PERMIT # ____________
DEP SEWER PERMIT # ____________
FDOT PERMIT # ____________
FDOT R/W PERMIT # ____________
FDOT UTILITY PERMIT # ____________
COUNTY R/W PERMIT # ____________
COUNTY BLDG PERMIT # ____________
WMD PERMIT # ____________
NPDES PERMIT # ____________

Dwayne Kreidler, PE, a Professional Engineer in the State of Florida, License No. 54579, is submitting the following electronically signed and sealed Drawing Sheets 00G01-00G04, 00C01 - 00C03, 00C09-00C11 and 00GM01 - 00GM05 on 9/20/2019 using SHA-256 authentication code. Printed copies of this document are not considered signed and sealed and the SHA authentication code must be verified on any electronic copies

DWAYNE R. KREIDLER
LICENSE
No 54579

PRINTED COPIES OF THIS DOCUMENT ARE NOT CONSIDERED SIGNED AND SEALED AND THE SIGNATURE MUST BE VERIFIED ON ANY ELECTRONIC COPIES.

John E. Howle State of Florida, Professional Engineer, License No. 27584. This item, including Sheets 00C04-00C08, 00GC01 - 00GC04 and has been electronically signed and sealed by John E. Howle, PE on 9/24/2019 using SHA-1 authentication code. Printed copies of this document are not considered signed and sealed and the SHA authentication code must be verified on any electronic copies

BOARD OF COUNTY COMMISSIONERS

DISTRICT ONE : GEORGE LINDSEY III, CHAIRMAN
DISTRICT TWO : RICK WILSON
*DISTRICT THREE : BILL BRASWELL
DISTRICT FOUR : MARTHA SANTIAGO
DISTRICT FIVE : JOHN HALL, VICE CHAIRMAN

* DISTRICT IN WHICH PROJECT IS LOCATED

COUNTY MANAGER : JIM FREEMAN

UTILITIES DIRECTOR : TAMARA RICHARDSON, PE.

UTILITIES

JIMMY CRADDOCK, SPECTRUM 863-288-2340
FRED VALDES, FRONTIER COMMUNICATIONS 941-906-6709
DARYL LESLIE, LAKELAND ELECTRIC 813-228-1157
TOM HOLLINGTON, POLK COUNTY UTLITIES 963-298-4184
GARY HEISTY, FLORIDA PUBLIC UTILITIES 863-292-2921

PROJECT MANAGER :

MARK ADDISON, P.E.
CAPITAL PROJECTS MANAGER
POLK COUNTY UTILITIES DIVISION
1011 JIM KEENE BLVD
WINTER HAVEN, FLORIDA, 33880
PHONE # (863) 298-4167
MARKADDISON@POLK-COUNTY.NET

ENGINEER OF RECORD :

DWAYNE KREIDLER, P.E.
CAROLLO ENGINEERS
200 E ROBINSON SUITE #1400,
ORLANDO, FL 32801
PHONE # (407) 478-4642
CERTIFICATE OF AUTHORIZATION #: 54579
DKREIDLER@CAROLLO.COM

CALL 48 HOURS
BEFORE YOU DIG

IT'S THE LAW!
DIAL 811

811
Know what's **below.**
Call before you dig.

SUNSHINE STATE ONE CALL OF FLORIDA, INC.

☒ CONSTRUCTION DRAWING
☐ RECORD DRAWING

ENGINEER DWAYNE R.KREIDLER, P.E.
print name
LICENSE # 54579

OCTOBER 2019

ENGINEER ____________
signature
DATE ____________

PERMIT SUBMITTAL - 10/31/2019

GIBSON OAKS
WATER PRODUCTION
FACILITY

PCU PROJECT # 2014-4-30-0

APPENDIX E-100 (6B) CAPITAL PROJECTS TITLE SHEET

GENERAL NOTES

1. THE EXISTING TOPOGRAPHICAL FEATURES SHOWN ON THE DRAWINGS FOR THE GIBSON OAKS SITE WAS PREPARED BASED ON AERIAL AND GROUND SURVEY AND REPRESENT CONDITIONS AS THEY EXIST AS OF OCTOBER 2017. REFER TO DWG 00C01 FOR SURVEY INFORMATION AND DATA.

2. THE EXISTING TOPOGRAPHICAL FEATURES SHOWN ON THE DRAWINGS FOR SHERWOOD LAKES SITE PLAN WAS PREPARED BASED ON AERIAL AND GROUND SURVEY AND REPRESENT CONDITONS AS THEY EXIST AS OF AUGUST 2018. REFER TO DWG 01C01 FOR SURVEY INFORMATION AND DATA.

3. AS PART OF THE BID PROCESS, AND PRIOR TO CONSTRUCTION, THE CONTRACTOR SHALL EXAMINE EACH OF THE THREE SITES (LAKE GIBSON, SHERWOOD LAKES AND GIBSON OAKS) OF THE PROPOSED WORK AND MAKE ALL NECESSARY INVESTIGATIONS TO THOROUGHLY DEFINE ALL DIFFICULTIES INVOLVED IN THE COMPLETION OF ALL WORK REQUIRED PURSUANT TO THE REQUIREMENTS OF THE CONTRACT DOCUMENTS.

4. PROVIDE A MINIMUM OF 3 FEET OF COVER OVER ALL PIPE TO BE INSTALLED ON THE PROJECT UNLESS OTHERWISE SHOWN. MECHANICALLY RESTRAIN ALL PIPING UNLESS OTHERWISE NOTED.

5. THE DRAWINGS DEPICT THE APPROXIMATE LOCATION OF UNDERGROUND UTILITIES, WHICH WERE DETERMINED FROM THE THE GROUND SURVEY AND THE OWNER'S RECORD DRAWINGS. THE CONTRACTOR SHALL VERIFY THE EXACT HORIZONTAL AND VERTICAL LOCATION OF UNDERGROUND UTILITIES IN THE AREA OF CONSTRUCTION PRIOR TO PROCEEDING WITH THE WORK. EXISTING UTILITIES SHALL BE EXPOSED USING DETECTION EQUIPMENT OR OTHER ACCEPTABLE MEANS. SUCH METHODS MAY INCLUDE BUT SHALL NOT BE LIMITED TO "SOFT DIG" EQUIPMENT AND GROUND PENETRATING RADAR (GPR). THE CONTRACTOR SHALL MAKE ALL NECESSARY ARRANGEMENTS AND PAY ALL COSTS ASSOCIATED WITH THE TEMPORARY RELOCATION, SUPPORT, MONITORING, PROTECTION, OR OTHER INTERACTION WITH UTILITY FEATURES WHICH MIGHT BE AFFECTED BY THE WORK. PROVIDE REQUIRED NOTICE TO OTHERS FOR SUCH WORK TO ALLOW THE PROJECT TO CONTINUE IN ACCORDANCE WITH THE CONTRACT SCHEDULE. THE COST OF SUCH WORK SHALL BE INCORPORATED INTO THE VARIOUS ITEMS OF WORK REQUIRING AND RELATED TO SUCH RELOCATION, SUPPORT, MONITORING OR PROTECTION. THE CONTRACTOR SHALL BE RESPONSIBLE FOR ANY AND ALL DAMAGE WHICH MIGHT RESULT FROM HIS FAILURE TO EXACTLY LOCATE AND PROTECT ANY AND ALL UTILITIES AND INFASTRUCTURE, WHETHER ABOVE OR BELOW GRADE. ANY DAMAGE SHALL BE REPAIRED AT NO ADDITIONAL COST TO OWNER.

6. A LISTING OF UTILITIES ARE PRESENTED ON THE COVER SHEET (DWG 00G01). THE LIST IS MEANT FOR INFORMATION ONLY. THE CONTRACTOR SHALL BE RESPONSIBLE FOR VERIFYING OWNERS OF ALL UNDERGROUND UTILITIES AS PART OF THE PROJECT.

7. RESTORE ALL PROPERTY AND INFRASTRUCTURE, INCLUDING UTILITIES DISTURBED BY CONSTRUCTION OPERATIONS TO THE CONDITIONS WHICH EXISTED PRIOR TO CONSTRUCTION. THE COST OF SUCH RESTORATION SHALL BE INCLUDED IN THE UNIT PRICES BID FOR THE VARIOUS ITEMS OF WORK REQUIRING SUCH RESTORATION.

8. THE CONTRACTOR SHALL EMPLOY A LAND SURVEYOR, REGISTERED IN THE STATE OF FLORIDA, TO REFERENCE AND RESTORE PROPERTY CORNERS AND LANDMARKS WHICH MAY BE DISTURBED BY CONSTRUCTION.

9. ALL PERVIOUS AREAS DISTURBED OR DAMAGED BY THE CONSTRUCTION OPERATION SHALL BE SODDED OR SEEDED. CONTRACTOR MUST MAINTAIN AND PRESERVE NEWLY GRADED AREAS AND REPAIR AREAS WHERE SETTLING AND EROSION HAVE OCCURRED. REFER TO SPECIFICATION SECTION 01355B FOR ADDITIONAL REQUIREMENTS.

10. ALL CONSTRUCTION AND MATERIALS SHALL COMPLY WITH THE POLK COUNTY UTILITIES MANUAL (USSM) STANDARDS AND SPECIFICATIONS, LATEST EDITION. ALL PAVEMENT AND SIDEWALK REPAIR SHALL BE IN ACCORDANCE WITH POLK COUNTY STANDARDS AND USSM , LATEST EDITION.

11. THE CONTRACTOR SHALL NOT ADVERSELY IMPACT DRAINAGE SYSTEMS DURING CONSTRUCTION. TEMPORARILY RECONFIGURE THE DRAINAGE SYSTEMS, WHICH MIGHT BE IMPACTED BY CONSTRUCTION AS THE WORK PROCEEDS, TO NOT CAUSE ADVERSE IMPACTS TO SURFACE WATER DRAINAGE EFFICIENCY. DO NOT IMPAIR SURFACE WATER DRAINAGE CAPACITY. FOLLOW THE REQUIREMENTS OF THE APPROVED POLLUTION PREVENTION PLAN FOR THE PROJECT.

12. MAINTAIN ACCESS TO ALL EXISTING PLANT OPERATIONS AND STRUCTURES UNTIL NEW OPERATIONS HAVE BEEN APPROVED.

13. PRIOR TO COMMENCING ANY EXCAVATION OR GRADING, THE CONTRACTOR SHALL OBTAIN ALL GEOTECHNICAL AND TOPOGRAPHIC SURVEY DATA AND LOCATIONS OF ABOVE GROUND AND UNDERGROUND UTILITIES. SHOULD THE CONTRACTOR DISCOVER ANY INACCURACIES, ERRORS OR OMISSIONS IN THE SURVEY DATA, THE CONTRACTOR SHALL IMMEDIATELY NOTIFY THE OWNER AND ENGINEER IN ORDER THAT PROPER ADJUSTMENTS CAN BE ANTICIPATED AND ORDERED.

14. CONTRACTOR SHALL PROVIDE TEMPORARY FENCING AS REQUIRED BY AGENCIES HAVING JURISDICTION OVER THE PROJECT, FOR PUBLIC SAFETY, AND AS NOTED ON THE DRAWINGS.

15. THE CONTRACTOR SHALL ENSURE THAT ALL NECESSARY PERMITS ARE IN HAND BEFORE COMMENCEMENT OF CONSTRUCTION. REFER TO THE GENERAL CONDITONS AND SPECIFICATIONS FOR A LIST OF ANTICIPATED PERMITS AND THE PERMITS OBTAINED BY THE OWNER. CONTRACTOR'S WORK SHALL COMPLY WITH ALL APPLICABLE BUILDING, STATE AND FEDERAL REGULATIONS.

16. THE CONTRACTOR IS REQUIRED TO OBTAIN WRITTEN APPROVAL FROM THE OWNER AND ENGINEER FOR ANY DEVIATIONS FROM THE PLANS AND/OR SPECIFICATIONS.

17. CONTRACTOR SHALL PROVIDE IN WRITING A MINIMUM OF 5 WORKING DAYS NOTICE PRIOR TO SCHEDULING TIE-IN. REFER TO SPECIFICATION SECTION 01140 FOR ADDITIONAL CONSTRUCTION RESTRICTIONS AND SCHEDULING REQUIREMENTS.

18. THE PCU BASE-1 DISPATCH OPERATOR (863-534-7351) SHALL BE NOTIFIED BY THE CONTRACTOR FOR PIPE EMERGENCIES.

19. THE CONTRACTOR SHALL IMMEDIATELY CONTACT THE OWNER AND REPAIR ALL DAMAGES TO THE OWNER'S UTILITIES AND FACILITIES AT NO ADDITIONAL COST TO THE OWNER. IF THE REPAIR IS NOT MADE IN A TIMELY MANNER, AS DETERMINED BY THE OWNER, THE OWNER MAY PERFORM REQUIRED REPAIRS AND CLEANUP. THE CONTRACTOR WILL BE CHARGED FOR ALL EXPENSES ASSOCIATED WITH THE REPAIR PERFORMED BY THE OWNER.

20. ONLY THE OWNER'S STAFF SHALL OPERATE WATER, WASTEWATER, AND RECLAIMED WATER VALVES. THE CONTRACTOR SHALL COORDINATE VALVE OPERATION WITH THE OWNER'S INSPECTOR. ALL NEW VALVES BEING INSTALLED SHALL REMAIN CLOSED DURING CONSTRUCTION. KEEP VALVES ON ALL WET TAPS CLOSED UNTIL APPROVED BY FDEP/FDOH.

21. THE UTILITY IMPROVEMENTS AND ADJUSTMENTS SHOWN ON THESE PLANS ARE INTENDED TO MAINTAIN THE INTEGRITY OF THE OWNER'S WATER, WASTEWATER AND RECLAIMED WATER SYSTEMS. ALL MATERIALS AND CONSTRUCTION SHALL BE IN ACCORDANCE WITH THE UTILITIES STANDARS AND SPECIFICATIONS MANUAL, LATEST REVISION. THE PLANS DO NOT INCLUDE WORK PERFORMED ON OR FOR UTILITY SYSTEMS OWNED BY OTHERS, UNLESS STATED OTHERWISE ON THE PLANS.

22. THE LIMITS OF THE ON-SITE WETLANDS BUFFER FOR THE GIBSON OAKS SITE IS PROVIDED TO THE CONTRACTOR FOR CONVENIENCE. THE WETLANDS ARE TO BE PROTECTED FROM DISTURBANCE AT ALL TIMES. CONTRACTOR SHALL PROVIDE EROSION CONTROL MEASURES PRIOR TO COMMENCEMENT OF THE CONSTRUCTION. REFER TO THE CIVIL DWGS AND SPECIFICATION SECTION 01355B FOR ADDITIONAL REQUIREMENTS.

23. AT NO TIME SHALL THE CONTRACTOR DISTURB OR TRAVEL ON SURROUNDING PROPERTIES WITHOUT WRITTEN CONSENT FROM THE PROPERTY OWNER. REPAIR OR RECONSTRUCTION OF DAMAGED AREAS ON SURROUNDING PROPERTIES SHALL BE PEROFMRED BY THE CONTRACTOR ON AN IMMEDIATE BASIS. ALL COSTS FOR REPAIRS SHALL BE THE RESPONSIBILITY OF THE CONTRACTOR AT NO ADDITIONAL COST TO THE OWNER. GRADING AND/OR CLEARING ON PROPERTIES OTHER THAN SHOWN ON THE BID DOCUMENTS IS PROHIBITED. REFER TO NOTE 19, IF REPAIRS ARE NOT MADE N A TIMELY MANNER.

24. REFER TO SPECIFICATION SECTION 01424, GENERAL DISCIPLINE DRAWING SHEETS FOR ABBREVIATIONS.

25. RESTORE SITE CONDITIONS IN ACCORDANCE WITH PCU STANDARDS AND USSM, LATEST EDITION.

REV	DATE	BY	DESCRIPTION

DESIGNED
HV
DRAWN
GG
CHECKED
DK
DATE
OCTOBER 2019

DWAYNE R. KREIDLER
No 54579

PRINTED COPIES OF THIS DOCUMENT ARE NOT CONSIDERED SIGNED AND SEALED AND THE SIGNATURE MUST BE VERIFIED ON ANY ELECTRONIC COPIES.

POLK
COUNTY

carollo®
200 East Robinson Street, Suite1400
Orlando, FL 32801
Phone (407) 478-4642
CA No. 8571

POLK COUNTY UTILITIES
GIBSON OAKS WATER PRODUCTION FACILITY
GENERAL
GENERAL NOTES

VERIFY SCALES
BAR IS ONE INCH ON ORIGINAL DRAWING
0 1"
IF NOT ONE INCH ON THIS SHEET, ADJUST SCALES ACCORDINGLY

JOB NO.
9621C.10
DRAWING NO.
00G02
SHEET NO.
02 OF 24

LAST SAVED BY: ggonzalez

PROJECT NO.
FILE NAME: 9621C10_00G02_LEVEL_II.dwg

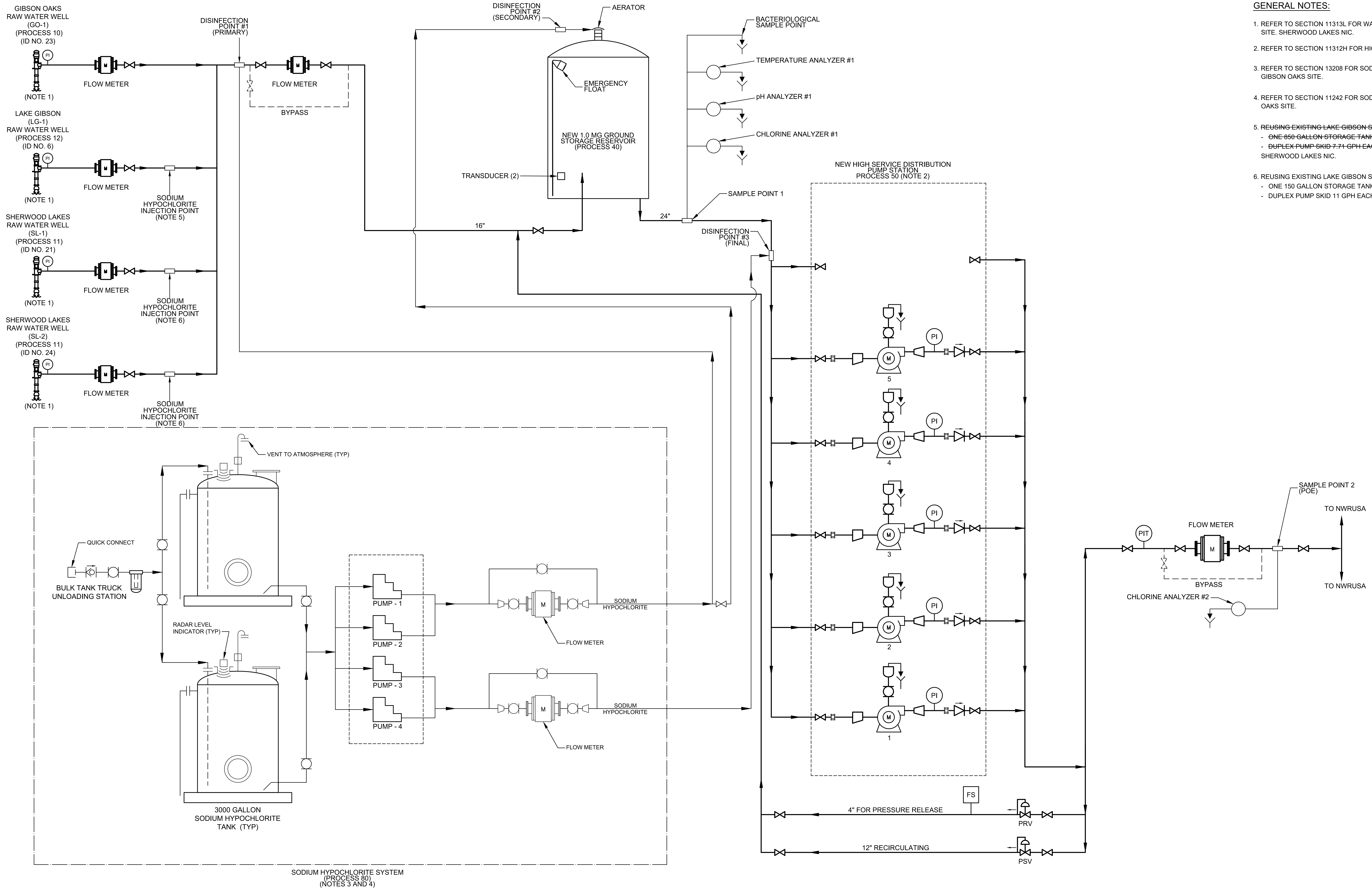

GENERAL NOTES:

1. REFER TO SECTION 11313L FOR WATER WELL PUMPS (PROCESS 10 AND 12) FOR EACH SITE. SHERWOOD LAKES NIC.
2. REFER TO SECTION 11312H FOR HIGH SERVICE PUMPS (PROCESS 50).
3. REFER TO SECTION 13208 FOR SODIUM HYPOCHLORITE STORAGE TANK (PROCESS 80) AT GIBSON OAKS SITE.
4. REFER TO SECTION 11242 FOR SODIUM HYPOCHLORITE PUMPS (PROCESS 80) AT GIBSON OAKS SITE.
5. ~~REUSING EXISTING LAKE GIBSON SODIUM HYPOCHLORITE SYSTEM~~
   - ~~ONE 850 GALLON STORAGE TANK (EXISTING)~~
   - ~~DUPLEX PUMP SKID 7.71 GPH EACH (EXISTING)~~

   SHERWOOD LAKES NIC.
6. REUSING EXISTING LAKE GIBSON SODIUM HYPOCHLORITE SYSTEM
   - ONE 150 GALLON STORAGE TANK (EXISTING)
   - DUPLEX PUMP SKID 11 GPH EACH (EXISTING)

REV	DATE	BY	DESCRIPTION

DESIGNED
HV
DRAWN
AG
CHECKED
DK
DATE
OCTOBER 2019

DWAYNE R. KREIDLER
No 54579

PRINTED COPIES OF THIS DOCUMENT ARE NOT CONSIDERED SIGNED AND SEALED AND THE SIGNATURE MUST BE VERIFIED ON ANY ELECTRONIC COPIES.

POLK COUNTY

carollo®
200 East Robinson Street, Suite1400
Orlando, FL 32801
Phone (407) 478-4642
CA No. 8571

POLK COUNTY UTILITIES
GIBSON OAKS WATER PRODUCTION FACILITY
GENERAL
FLOW SCHEMATIC

VERIFY SCALES
BAR IS ONE INCH ON ORIGINAL DRAWING
0 1"
IF NOT ONE INCH ON THIS SHEET, ADJUST SCALES ACCORDINGLY

JOB NO.
9621C.10
DRAWING NO.
00G03
SHEET NO.
03 OF 24

PROJECT NO.
FILE NAME: 9621C10_00G03_LEVEL_II.dwg

LAST SAVED BY: ggonzalez

LAST SAVED BY: ggonzalez

REV	DATE	BY	DESCRIPTION

DESIGNED
HV
DRAWN
AG
CHECKED
DK
DATE
OCTOBER 2019

DWAYNE R. KREIDLER
LICENSE
No 54579
STATE OF FLORIDA

PRINTED COPIES OF THIS DOCUMENT ARE NOT CONSIDERED SIGNED AND SEALED AND THE SIGNATURE MUST BE VERIFIED ON ANY ELECTRONIC COPIES.

carollo®
200 East Robinson Street, Suite1400
Orlando, FL 32801
Phone (407) 478-4642
CA No. 8571

POLK COUNTY UTILITIES

GIBSON OAKS WATER PRODUCTION FACILITY

GENERAL

KEY MAP

VERIFY SCALES
BAR IS ONE INCH ON ORIGINAL DRAWING
0 1"
IF NOT ONE INCH ON THIS SHEET, ADJUST SCALES ACCORDINGLY

JOB NO.
9621C.10

DRAWING NO.
00G04

SHEET NO.
04 OF 24

PROJECT NO.
FILE NAME: 9621C10_00G04_LEVEL_II.dwg

SURVEYOR'S NOTES

1. DISTANCES, BEARINGS AND ACREAGE SHOWN HEREON ARE GRID VALUES BASED ON THE FLORIDA STATE PLANE COORDINATE SYSTEM, NORTH AMERICAN DATUM OF 1983, FLORIDA WEST ZONE, ADJUSTMENT OF 2007 AND REFERENCE THE SOUTH LINE OF THE SOUTHEAST QUARTER, HAVING A GRID BEARING OF SOUTH 89°40'22" WEST. A SCALE FACTOR OF 0.999414 IS USED FOR THIS PROJECT.

2. THIS SURVEY MAP OR THE COPIES THEREOF ARE NOT VALID WITHOUT THE SIGNATURE AND THE ORIGINAL RAISED SEAL OF A FLORIDA LICENSED SURVEYOR AND MAPPER.

3. ALL MEASUREMENTS ARE BASED ON THE UNITED STATES SURVEY FOOT (SHOWN IN FEET AND DECIMAL FORMAT) UNLESS OTHERWISE SPECIFIED.

4. ONLY THOSE SPECIFIC IMPROVEMENTS SHOWN HEREON HAVE BEEN FIELD LOCATED. NO OTHER UNDERGROUND FIXED IMPROVEMENTS HAVE BEEN LOCATED.

5. THE HORIZONTAL LOCATION OF NON-DIMENSIONED FEATURES ARE PLOTTED TO SCALE, UNLESS NOTED OTHERWISE.

6. AN ASSESSMENT OF ENVIRONMENTAL CONCERNS, IF EXISTENT, WAS NOT PERFORMED AS A PART OF THIS SURVEY.

7. OVERALL PARCEL CONTAINS 40 ACRES, MORE OR LESS.

8. SYMBOLS SHOWN WITHIN THIS DRAWING ARE NOT SCALE DEPENDENT.

9. ATTENTION IS DIRECTED TO THE FACT THAT THIS DRAWING MAY HAVE BEEN ALTERED IN SIZE BY REPRODUCTION. THIS MUST BE CONSIDERED WHEN OBTAINING SCALED DATA.

10. THE LAST DATE OF FIELD WORK WAS OCTOBER 24, 2017.

11. ADDITIONS OR DELETIONS TO SURVEY MAPS OR REPORTS BY OTHER THAN THE SIGNING PARTY OR PARTIES ARE PROHIBITED WITHOUT WRITTEN CONSENT OF THE SIGNING PARTY OR PARTIES.

12. LANDS SHOWN HEREON WERE NOT ABSTRACTED BY CIVILSURV DESIGN GROUP, INC., FOR RIGHTS-OF-WAY, EASEMENTS, OWNERSHIP, OR OTHER INSTRUMENTS OF RECORD.

13. ELEVATIONS SHOWN HEREON ARE RELATIVE TO THE NORTH AMERICAN VERTICAL DATUM OF 1988 (NAVD 88) AND REFERENCE NATIONAL GEODETIC SURVEY BENCHMARK E 743, HAVING AN ELEVATION OF 155.75 FEET.

14. BOUNDARY INFORMATION AND BUILDING LOCATIONS SHOWN HEREON TAKEN FROM BOUNDARY SURVEY PREPARED BY IMPERIAL POLK COUNTY ROADWAY DIVISION, SURVEYING AND MAPPING SECTION, FILE NUMBER 7407E15-1, DATED 5/20/15.

15. TREE SIZES ARE SHOWN ADJACENT TO TREE SYMBOL AND ARE IN INCHES TAKEN AT BREAST HEIGHT.

LEGAL DESCRIPTION

(O.R.B. 5391, PAGE 1507)

THE SOUTHWEST $\frac{1}{4}$ OF THE SOUTHEAST $\frac{1}{4}$ OF SECTION 7, TOWNSHIP 27 SOUTH RANGE 24 EAST, POLK COUNTY, FLORIDA.

CONTAINING 40.0 ACRES, MORE OR LESS.

REV	DATE	BY	DESCRIPTION

DESIGNED HV
DRAWN AG
CHECKED DK
DATE OCTOBER 2019

DWAYNE R. KREIDLER
No 54579

PRINTED COPIES OF THIS DOCUMENT ARE NOT CONSIDERED SIGNED AND SEALED AND THE SIGNATURE MUST BE VERIFIED ON ANY ELECTRONIC COPIES.

carollo
200 East Robinson Street, Suite1400
Orlando, FL 32801
Phone (407) 478-4642
CA No. 8571

POLK COUNTY UTILITIES
GIBSON OAKS WATER PRODUCTION FACILITY
CIVIL
EXISTING SITE PLAN
GIBSON OAKS

VERIFY SCALES
BAR IS ONE INCH ON ORIGINAL DRAWING
0 1"
IF NOT ONE INCH ON THIS SHEET, ADJUST SCALES ACCORDINGLY

JOB NO. 9621C.10
DRAWING NO. 00C01
SHEET NO. 07 OF 24

LAST SAVED BY: ggonzalez

PROJECT NO.
FILE NAME: 9621C10_00C01_LEVEL_II.dwg

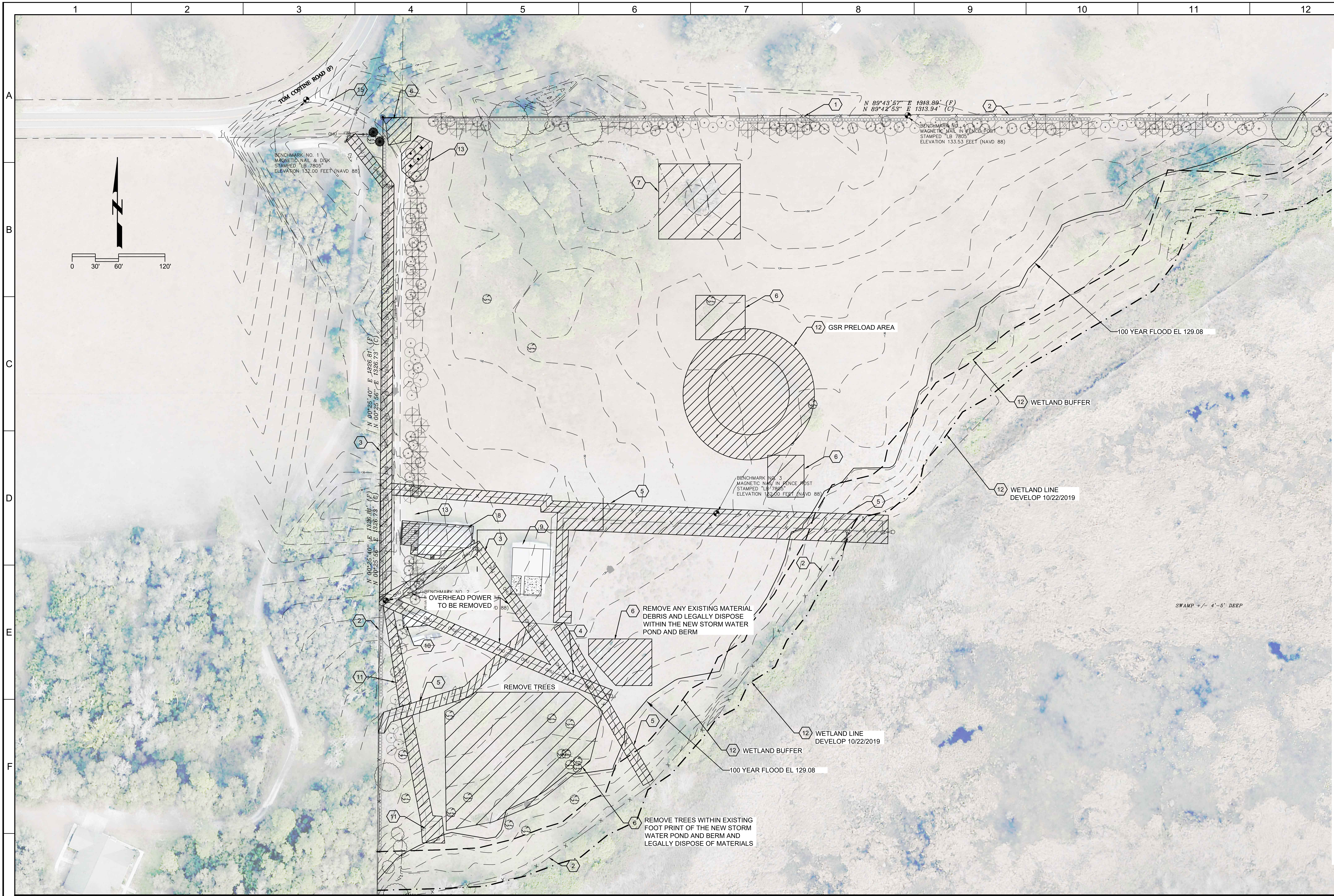

GENERAL NOTES

1. REFER TO SECTION 02051 FOR ADDITIONAL DEMOLITION REQUIREMENTS.
2. REFER TO SECTION 01140 FOR RESTRICTIONS ON THE DEMOLITION AND CONSTRUCTION SEQUENCE. COORDINATE ALL OTHER WORK (STRUCTURAL, MECHANICAL, CIVIL, ELECTRICAL) BEFORE DEVELOPING THE CONSTRUCTION SCHEDULE AND PROCEEDING WITH THE WORK.
3. THE DEMOLITION ACTIVITIES SHALL NOT RESTRICT ACCESS ON OPERATION TO ANY PART OF THE FACILITY.
4. REFER TO SECTION 02200 FOR CLEARING AND GRUBBING. CLEAR AND GRUB ALL AREAS AROUND THE NEW STORMWATER POND, BERM, ROADWAY, STRUCTURES AND NEW PIPING.

KEY NOTES

1. EXISTING LANDSCAPING AND IRRIGATION SHALL REMAIN UNDISTURBED.
2. EXISTING CATTLE FENCE SHALL REMAIN.
3. OVERHEAD ELECTRIC AND ASSOCIATED ITEMS TO BE REMOVED.
4. OVERHEAD ELECTRIC, WELL, PUMP, AND ASSOCIATED EQUIPMENT SHALL BE DEMOLISHED AND ABANDONED. COORDINATE WITH PCU ON THE SCHEDULE FOR THIS WORK PRIOR TO PROCEEDING.
5. REMOVE AND LEGALLY DISPOSE INTERIOR 4'-0" BARBED CATTLE FENCE.
6. REMOVE AND LEGALLY DISPOSE TREES AND VEGETATION.
7. REMOVE AND LEGALLY DISPOSE DEBRIS PILE.
8. REMOVE AND LEGALLY DISPOSE OF EXISTING RESIDENTIAL BUILDING (PROCESS 110). GROUT FILL SEPTIC TANK AND ABANDON EXISTING DRAIN FIELD.
9. EXISTING POLE BARN (PROCESS 120) TO REMAIN.
10. REMOVE AND LEGALLY DISPOSE OF EXISTING METAL SHED.
11. PRELOAD FILL MATERIAL SHALL BE REUSED FOR SITE GRADING MATERIAL. FILL MATERIAL IS ESTIMATED AT 14,000 +/- CY. COORDINATE GRADING AND TRENCH WORK TO ACCOMMODATE THIS EXISTING CONDITION AT NO ADDITIONAL COST TO THE OWNER.
12. 50' WETLAND BUFFER LINE AND WETLAND LINE DEVELOPED FROM SITE VISIT WITH FDEP ON 10/22/2019. COORDINATE WITH SITE CIVIL DRAWINGS, MAINTAIN BUFFER AND SILT FENCE THROUGHOUT ALL CONSTRUCTION ACTIVITIES.
13. MOVE THE EXISTING LANDSCAPE IMPACTED BY THE NEW ENTRY ROADWAY. RELOCATE TO OPEN AREA WEST OF THE RESIDENTIAL UNIT LOCATION. MATCH ORIGINAL ARRANGEMENT AND SPACING. CAP IRRIGATION HEADS AND CASE UNDER NEW ROADWAY (MINIMUM 4-INCH SCH 40 PVC). PROVIDE ISOLATION VALVES ON EITHER SIDE OF NEW SERVICE ROADWAY.
14. EXISTING CONSTRUCTION ENTRANCE ROADWAY INSTALLED FROM GSR PRELOADING CONSTRUCTION. MAINTAIN ENTRY WAY AND ACCESS THROUGHOUT THE CONSTRUCTION ACTIVITIES.

REV	DATE	BY	DESCRIPTION

DESIGNED
HV
DRAWN
AG
CHECKED
DK
DATE
OCTOBER 2019

DWAYNE R. KREIDLER
LICENSE No 54579
STATE OF FLORIDA
PROFESSIONAL ENGINEER

PRINTED COPIES OF THIS DOCUMENT ARE NOT CONSIDERED SIGNED AND SEALED AND THE SIGNATURE MUST BE VERIFIED ON ANY ELECTRONIC COPIES.

POLK COUNTY

carollo®
200 East Robinson Street, Suite1400
Orlando, FL 32801
Phone (407) 478-4642
CA No. 8571

POLK COUNTY UTILITIES
GIBSON OAKS WATER PRODUCTION FACILITY
CIVIL
DEMOLITION PLAN - GIBSON OAKS

VERIFY SCALES
BAR IS ONE INCH ON ORIGINAL DRAWING
0 1"
IF NOT ONE INCH ON THIS SHEET, ADJUST SCALES ACCORDINGLY

JOB NO.
9621C.10
DRAWING NO.
00C02
SHEET NO.
06 OF 24

LAST SAVED BY: ggonzalez

PROJECT NO.
FILE NAME: 9621C10_00C02_LEVEL_II.dwg

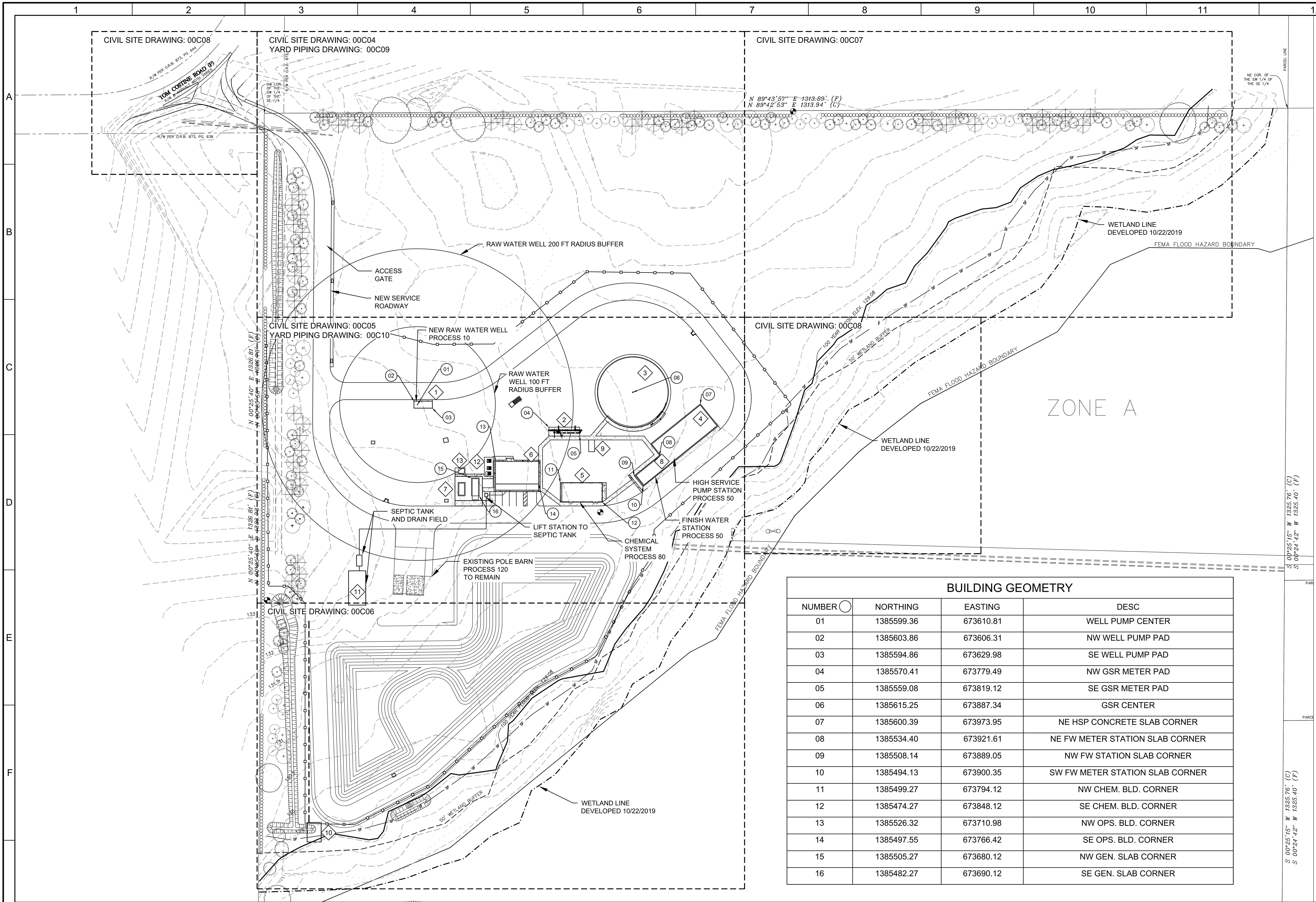

GENERAL NOTES:

1. REFER TO SITE CIVIL DRAWING FOR ROADWAY AND POND GEOMETRY.
2. REFER TO YARD PIPING DRAWINGS FOR YARD PIPING GEOMETRY

KEY NOTES:

1	WELL PAD (PROCESS 10)
2	GSR FILL STATION (PROCESS 40)
3	GROUND STORAGE RESERVOIR (PROCESS 40)
4	HIGH SERVICE PUMP STATION AND FINISH WATER STATION (PROCESS 50)
5	CHEMICAL SYSTEM (PROCESS 80)
6	OPERATION BUILDING (PROCESS 90)
7	GENERATOR AND FUEL STORAGE
8	RECIRCULATION ASSEMBLY (PROCESS 40)
9	RECIRCULATION LINE BACK FLOW PREVENTER (PROCESS 40)
10	EXISTING RESIDENTIAL WELL TO REMAIN FOR LANDSCAPE IRRIGATION
11	SEPTIC TANK AND DRAIN FIELD
12	HVAC CONDENSATE UNITS
13	UTILITY TRANSFORMER

BUILDING GEOMETRY

NUMBER ○	NORTHING	EASTING	DESC
01	1385599.36	673610.81	WELL PUMP CENTER
02	1385603.86	673606.31	NW WELL PUMP PAD
03	1385594.86	673629.98	SE WELL PUMP PAD
04	1385570.41	673779.49	NW GSR METER PAD
05	1385559.08	673819.12	SE GSR METER PAD
06	1385615.25	673887.34	GSR CENTER
07	1385600.39	673973.95	NE HSP CONCRETE SLAB CORNER
08	1385534.40	673921.61	NE FW METER STATION SLAB CORNER
09	1385508.14	673889.05	NW FW STATION SLAB CORNER
10	1385494.13	673900.35	SW FW METER STATION SLAB CORNER
11	1385499.27	673794.12	NW CHEM. BLD. CORNER
12	1385474.27	673848.12	SE CHEM. BLD. CORNER
13	1385526.32	673710.98	NW OPS. BLD. CORNER
14	1385497.55	673766.42	SE OPS. BLD. CORNER
15	1385505.27	673680.12	NW GEN. SLAB CORNER
16	1385482.27	673690.12	SE GEN. SLAB CORNER

REV	DATE	BY	DESCRIPTION

DESIGNED
HV
DRAWN
AG
CHECKED
DK
DATE
OCTOBER 2019

DWAYNE R. KREIDLER
LICENSE No 54579

carollo®
200 East Robinson Street, Suite1400
Orlando, FL 32801
Phone (407) 478-4642
CA No. 8571

POLK COUNTY UTILITIES

GIBSON OAKS WATER PRODUCTION FACILITY

CIVIL

NEW SITE KEY PLAN AND BUILDING GEOMETRY - GIBSON OAKS

VERIFY SCALES
BAR IS ONE INCH ON ORIGINAL DRAWING
0 1"
IF NOT ONE INCH ON THIS SHEET, ADJUST SCALES ACCORDINGLY

JOB NO.
9621C.10
DRAWING NO.
00C03
SHEET NO.
07 OF 24

LAST SAVED BY: ggonzalez

PROJECT NO.
FILE NAME: 9621C10_00C03_LEVEL_II.dwg

MATCHLINE SEE SHEET 00C05

CONSTRUCTION DRAWINGS

John E. Howle State of Florida, Professional Engineer, License No. 27584. This item, including sheets 00C04 - 00C08 and 00GC01 - 00GC01, has been electronically signed and sealed by John E. Howle, PE on 10/31/2019 using SHA-1 authentication code. Printed copies of this document are not considered signed and sealed and the SHA authentication code must be verified on any electronic copies.

DESIGNED	JEH
DRAWN	MT
CHECKED	CRF
DATE	OCTOBER 2019

POLK COUNTY

carollo
200 East Robinson Street, Suite1400
Orlando, FL 32801
Phone (407) 478-4642
CA No. 8571

CIVILSURV
A Tradition of Innovative Engineering

POLK COUNTY UTILITIES
GIBSON OAKS WATER PRODUCTION FACILITY
CIVIL
PAVING, GRADING, AND STORMWATER PLAN

VERIFY SCALES
BAR IS ONE INCH ON ORIGINAL DRAWING
0 1"
IF NOT ONE INCH ON THIS SHEET, ADJUST SCALES ACCORDINGLY

JOB NO. 9621C.10
DRAWING NO. 00C04
SHEET NO. 8 OF 24

File: Z:\PROJECTS\195 CAROLLO ENG\004 GIBSON OAKS\DRAWINGS\195001003_SITE PLAN.DWG Plot Date: 10/28/2019 1:00 PM Plotted by: MORGAN THOMAS

File: Z:\PROJECTS\195 CAROLLO ENG\004 GIBSON OAKS\DRAWINGS\195001003_SITE PLAN.DWG Plot Date: 10/28/2019 1:00 PM Plotted by: MORGAN THOMAS

CONSTRUCTION DRAWINGS

John E. Howle State of Florida, Professional Engineer, License No. 27584. This item, including sheets 00C04 - 00C08 and 00GC01 - 00GC01, has been electronically signed and sealed by John E. Howle, PE on 10/31/2019 using SHA-1 authentication code. Printed copies of this document are not considered signed and sealed and the SHA authentication code must be verified on any electronic copies.

DESIGNED	JEH
DRAWN	MT
CHECKED	CRF
DATE	OCTOBER 2019

POLK COUNTY

carollo
200 East Robinson Street, Suite1400
Orlando, FL 32801
Phone (407) 478-4642
CA No. 8571

CIVILSURV
A Tradition of Innovative Engineering

POLK COUNTY UTILITIES
GIBSON OAKS WATER PRODUCTION FACILITY
CIVIL
PAVING, GRADING, AND STORMWATER PLAN

VERIFY SCALES
BAR IS ONE INCH ON ORIGINAL DRAWING
0 1"
IF NOT ONE INCH ON THIS SHEET, ADJUST SCALES ACCORDINGLY

JOB NO. 9621C.10
DRAWING NO. 00C05
SHEET NO. 9 OF 24

MATCHLINE SEE SHEET 00C05

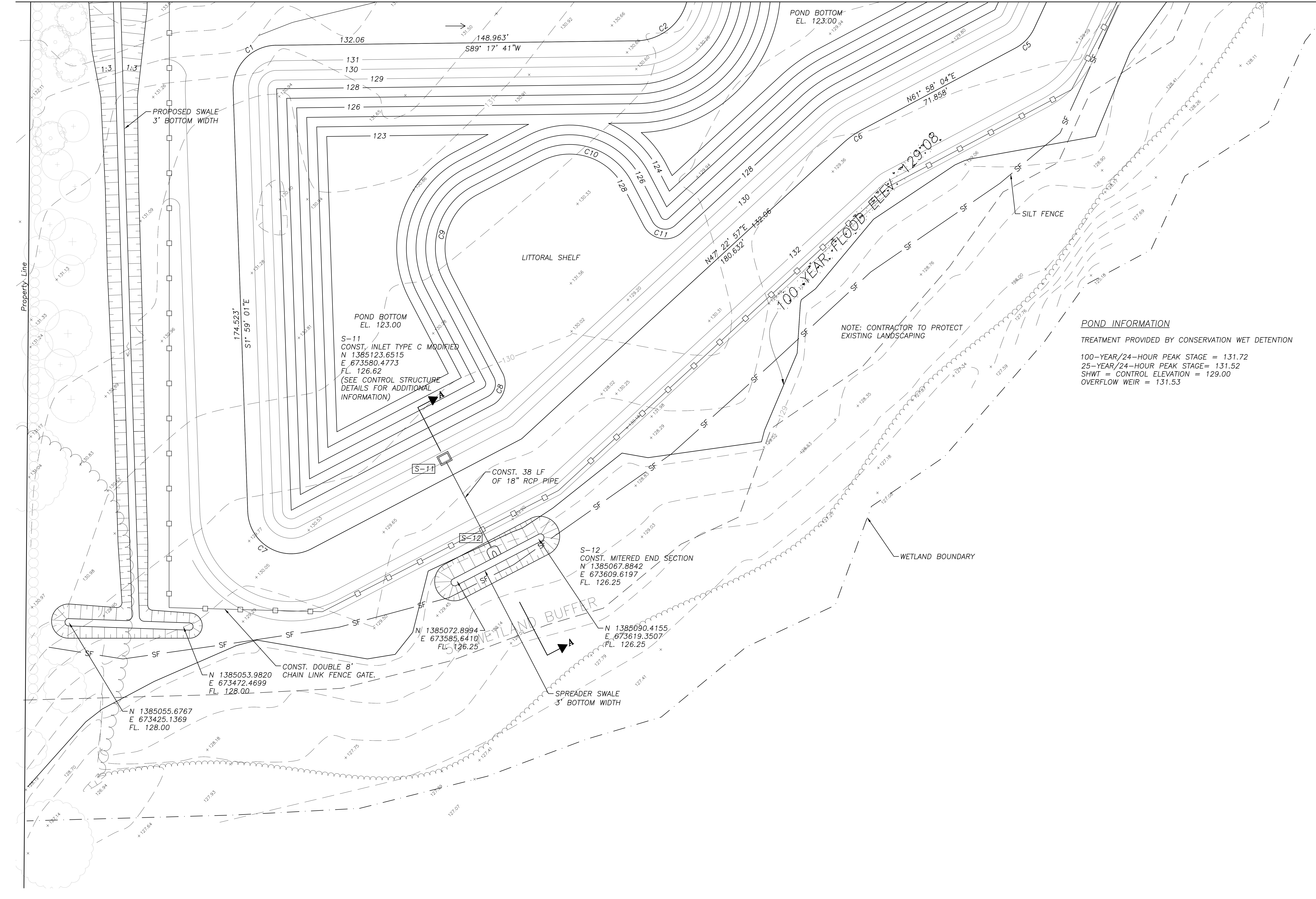

POND INFORMATION

TREATMENT PROVIDED BY CONSERVATION WET DETENTION

100–YEAR/24–HOUR PEAK STAGE = 131.72
25–YEAR/24–HOUR PEAK STAGE= 131.52
SHWT = CONTROL ELEVATION = 129.00
OVERFLOW WEIR = 131.53

POND CURVE DATA

CURVE NO.	L	Δ	R
C1	28.68'	91°16'42"	18.00'
C2	34.15'	88°56'03"	22.00'
C3	28.27'	90°00'00"	18.00'
C4	36.11'	114°56'47"	18.00'
C5	11.63'	37°01'17"	18.00'
C6	9.67'	14°35'07"	38.00'
C7	36.33'	115°38'38"	18.00'
C8	15.71'	90°00'00"	10.00'
C9	39.27'	90°00'00"	25.00'
C10	39.27'	90°00'00"	25.00'
C11	18.32'	104°59'24"	10.00'

File: Z:\PROJECTS\195 CAROLLO ENG\004 GIBSON OAKS\DRAWINGS\19500.1003_SITE PLAN.DWG Plot Date: 10/28/2019 1:00 PM Plotted by: MORGAN THOMAS

CONSTRUCTION DRAWINGS

John E. Howle State of Florida, Professional Engineer, License No. 27584. This item, including sheets 00C04 - 00C08 and 00GC01 - 00GC01, has been electronically signed and sealed by John E. Howle, PE on 10/31/2019 using SHA-1 authentication code. Printed copies of this document are not considered signed and sealed and the SHA authentication code must be verified on any electronic copies.

DESIGNED	JEH
DRAWN	MT
CHECKED	CRF
DATE	OCTOBER 2019

POLK COUNTY

carollo
200 East Robinson Street, Suite1400
Orlando, FL 32801
Phone (407) 478-4642
CA No. 8571

CIVILSURV
A Tradition of Innovative Engineering

POLK COUNTY UTILITIES
GIBSON OAKS WATER PRODUCTION FACILITY
CIVIL
PAVING, GRADING, AND STORMWATER PLAN

VERIFY SCALES
BAR IS ONE INCH ON ORIGINAL DRAWING
0 1"
IF NOT ONE INCH ON THIS SHEET, ADJUST SCALES ACCORDINGLY

JOB NO. 9621C.10
DRAWING NO. 00C06
SHEET NO. 10 OF 24

CONSTRUCTION DRAWINGS

John E. Howle State of Florida, Professional Engineer, License No. 27584. This item, including sheets 00C04 - 00C08 and 00GC01 - 00GC01, has been electronically signed and sealed by John E. Howle, PE on 10/31/2019 using SHA-1 authentication code. Printed copies of this document are not considered signed and sealed and the SHA authentication code must be verified on any electronic copies.

DESIGNED	JEH
DRAWN	MT
CHECKED	CRF
DATE	OCTOBER 2019

POLK COUNTY

carollo

200 East Robinson Street, Suite1400
Orlando, FL 32801
Phone (407) 478-4642
CA No. 8571

CIVILSURV
A Tradition of Innovative Engineering

POLK COUNTY UTILITIES

GIBSON OAKS WATER PRODUCTION FACILITY

CIVIL

PAVING, GRADING, AND STORMWATER PLAN

VERIFY SCALES
BAR IS ONE INCH ON ORIGINAL DRAWING
0 1"
IF NOT ONE INCH ON THIS SHEET, ADJUST SCALES ACCORDINGLY

JOB NO.
9621C.10

DRAWING NO.
00C07

SHEET NO.
11 OF 24

File: Z:\PROJECTS\1195 CAROLLO ENG\004 GIBSON OAKS\DRAWINGS\1195001003_SITE PLAN.DWG Plot Date: 10/28/2019 1:00 PM Plotted by: MORGAN THOMAS

MATCHLINE SEE SHEET 00C07

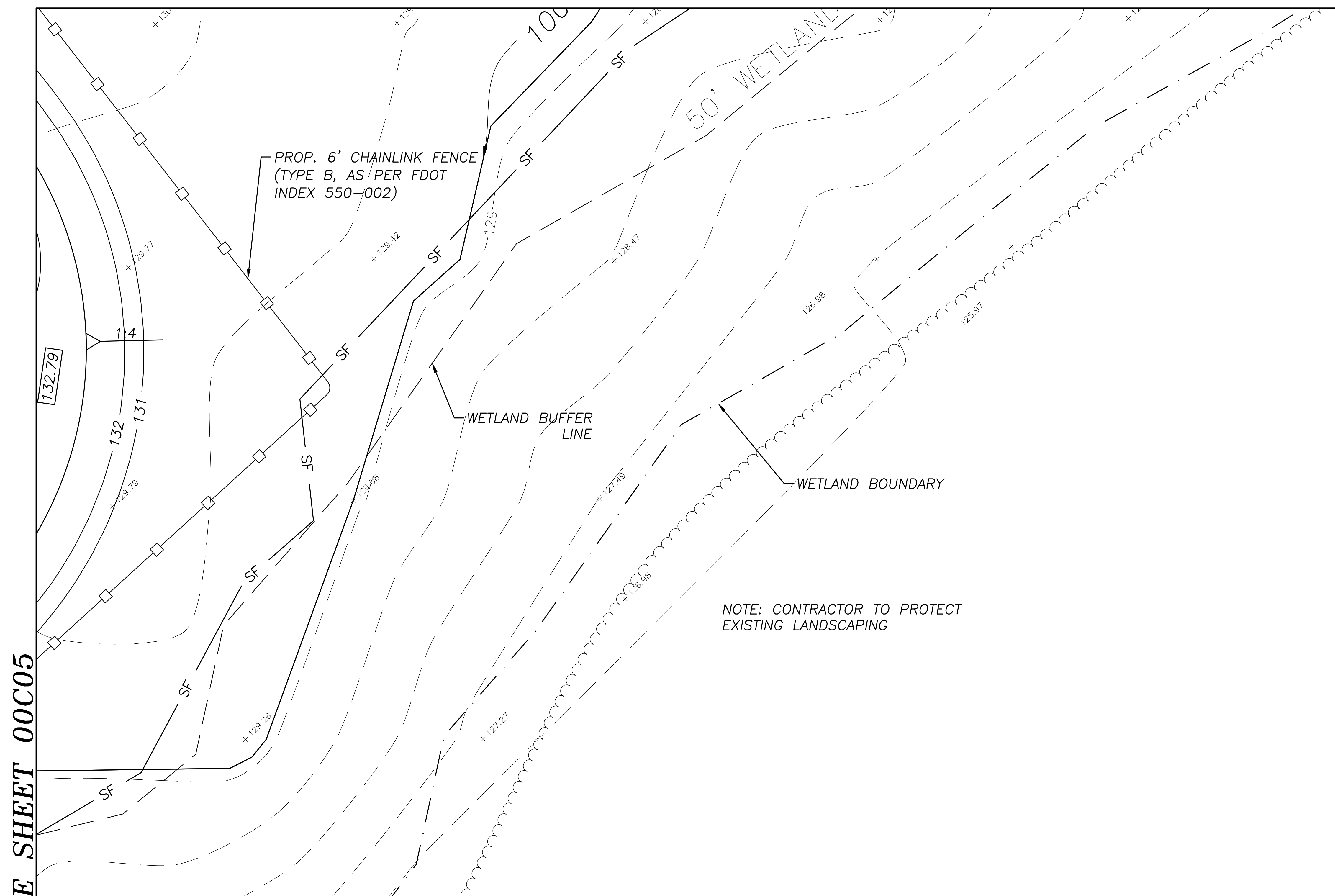

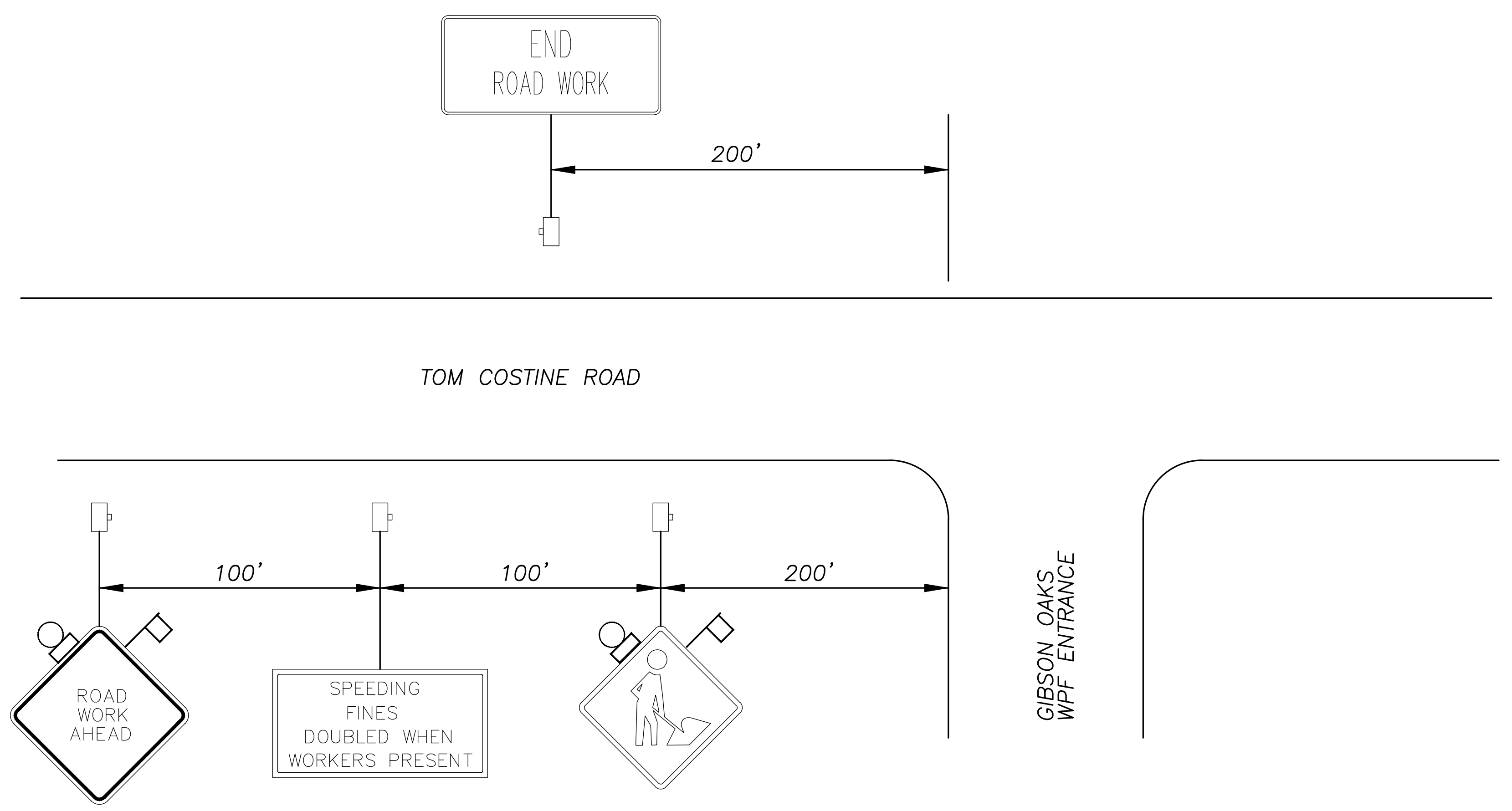

ADVANCED WARNING SIGNS
N.T.S.

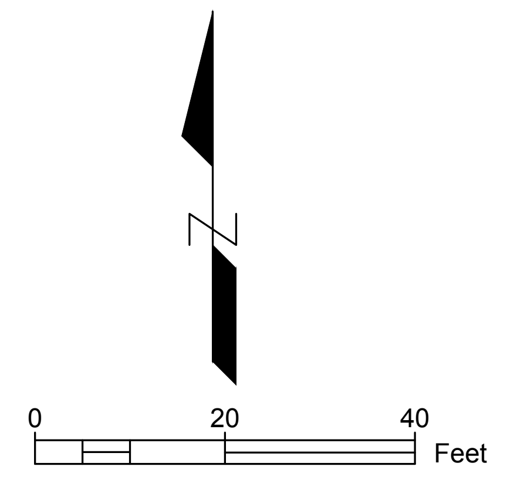

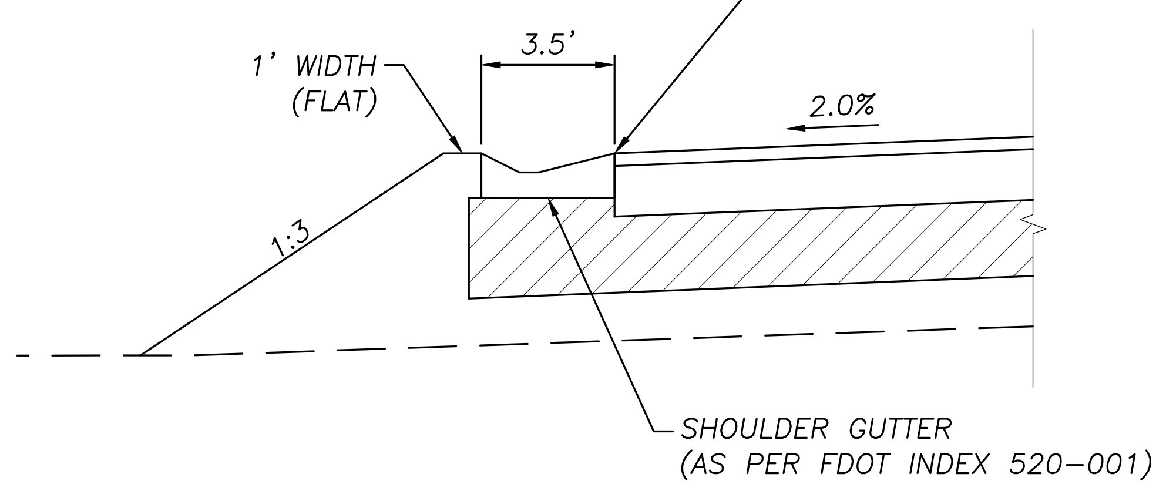

SHOULDER GUTTER DETAIL
N.T.S.

MAINTENANCE OF TRAFFIC NOTES:

1. INSTALL SIMILAR SIGNAGE LAYOUT IN THE OPPOSITE DIRECTION.
2. USE FDOT INDEX 102-603 TO CONSTRUCT THE ENTRANCE TURNOUT.
3. FOR ADDITIONAL MAINTENANCE OF TRAFFIC DETAILS REFER TO FDOT INDEX 102-600.

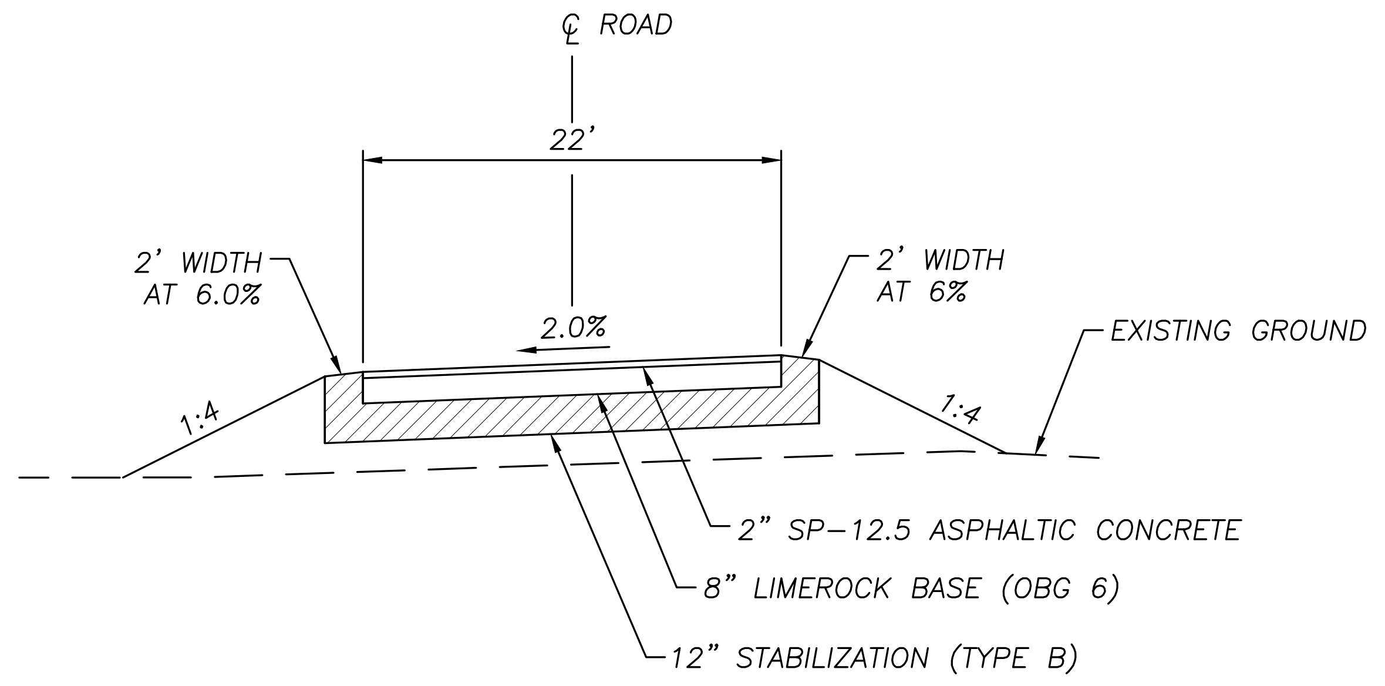

ROAD TYPICAL SECTION
N.T.S.

NOTES:

1. REFER TO FDOT PAVEMENT DESIGN MANUAL FOR ADDITIONAL INFORMATION ON PAVEMENT STRUCTURE.
2. PAVEMENT STRUCTURE MATERIALS SHALL CONFORM TO THE FDOT STANDARD SPECIFICATIONS FOR ROAD AND BRIDGE CONSTRUCTION.

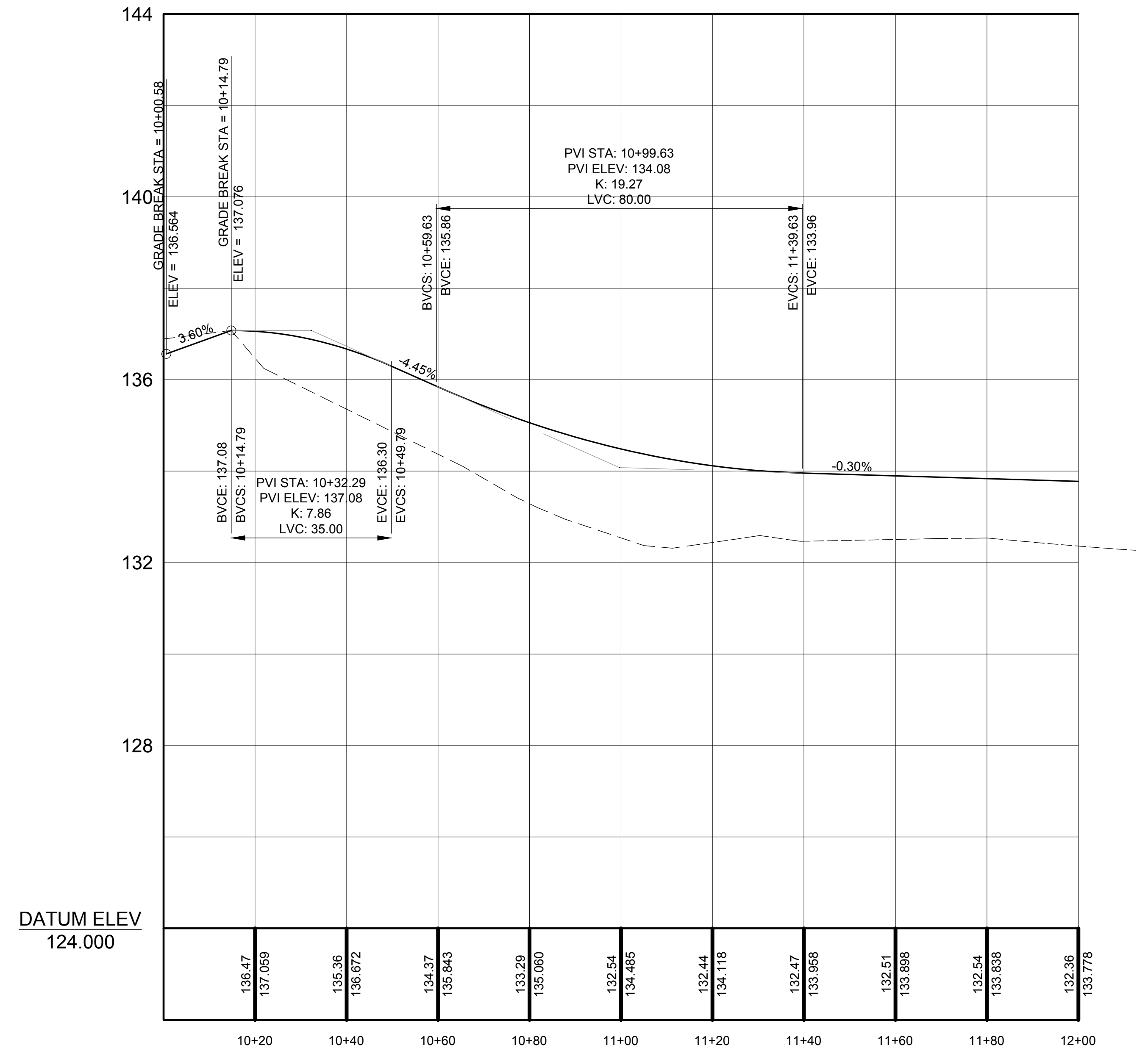

ROAD ENTRANCE PROFILE
N.T.S.

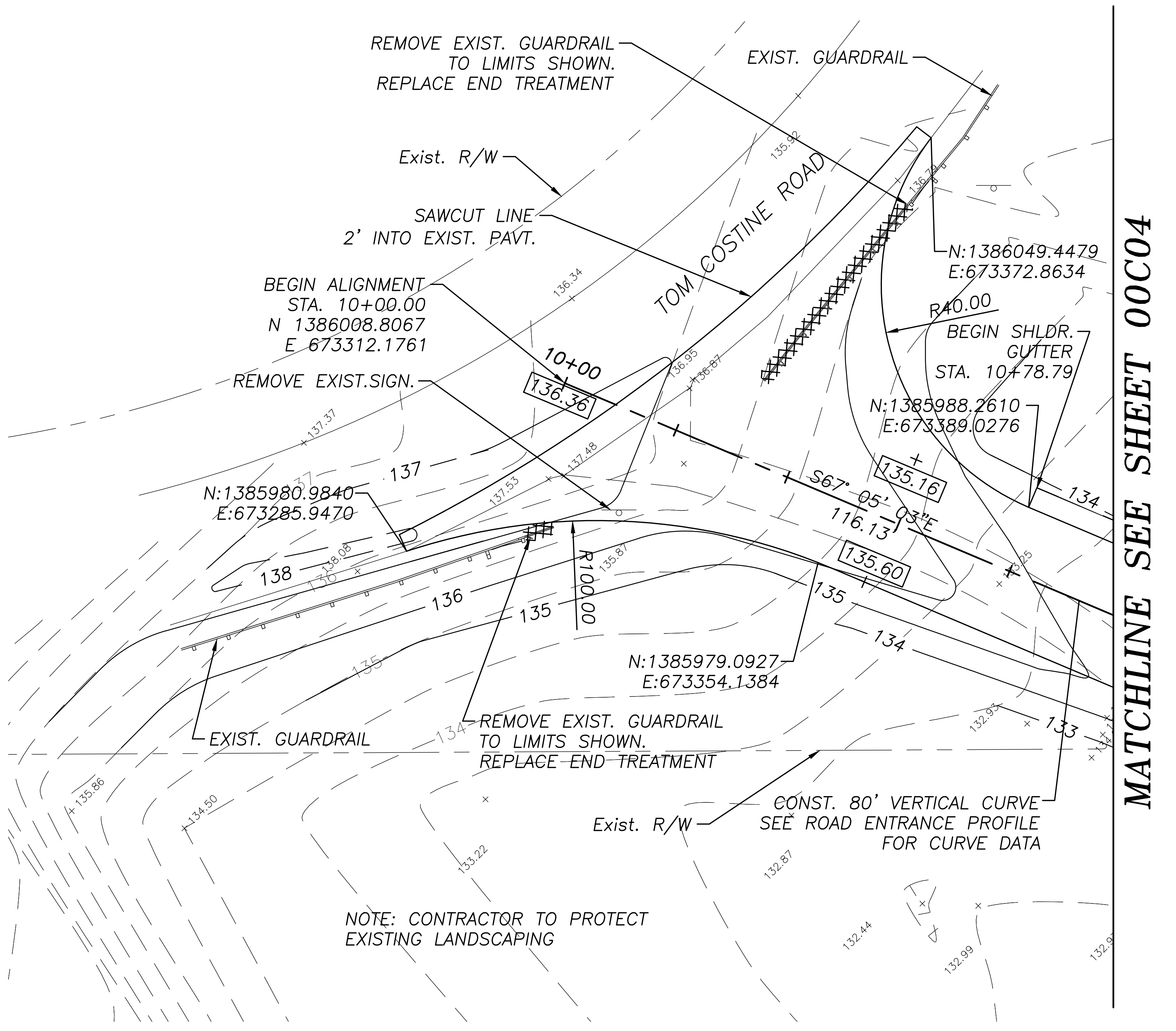

CONSTRUCTION DRAWINGS

John E. Howle State of Florida, Professional Engineer, License No. 27584. This item, including sheets 00C04 - 00C08 and 00GC01 - 00GC01, has been electronically signed and sealed by John E. Howle, PE on 10/31/2019 using SHA-1 authentication code. Printed copies of this document are not considered signed and sealed and the SHA authentication code must be verified on any electronic copies.

DESIGNED	JEH
DRAWN	MT
CHECKED	CRF
DATE	OCTOBER 2019

POLK COUNTY

carollo
200 East Robinson Street, Suite1400
Orlando, FL 32801
Phone (407) 478-4642
CA No. 8571

CIVILSURV
A Tradition of Innovative Engineering

POLK COUNTY UTILITIES
GIBSON OAKS WATER PRODUCTION FACILITY
CIVIL
PAVING, GRADING, AND STORMWATER PLAN

VERIFY SCALES
BAR IS ONE INCH ON ORIGINAL DRAWING
0 1"
IF NOT ONE INCH ON THIS SHEET, ADJUST SCALES ACCORDINGLY

JOB NO.
9621C.10
DRAWING NO.
00C08
SHEET NO.
12 OF 24

File: Z:\PROJECTS\195 CAROLLO ENG\004 GIBSON OAKS\DRAWINGS\195001003_SITE PLAN.DWG Plot Date: 10/28/2019 1:01 PM Plotted by: MORGAN THOMAS

PIPING FITTINGS AND VALVES SCHEDULE

NUMBER	SHEET	NORTHING	EASTING	DESC	ELEV (1)
01	00C09	1385948.962	673494.614	24" 90° BEND	125.75 (2)
02	00C09	1385943.155	673522.484	12" 90° BEND	128.45 (2)
03	00C10	1385650.592	673522.484	12" 90° BEND	1128.25
04	00C10	1385650.592	673693.715	12" 45° BEND	128.25
05	00C10	1385616.820	673727.487	12" GV	128.25
06	00C10	1385614.355	673729.952	12" X 8" TEE	128.25
07	00C10	1385612.163	673727.760	8" GV	128.25
08	00C10	1385599.360	673714.958	45° BEND	128.25
09	00C10	1385590.216	673754.091	12" 45° BEND	127.5
10	00C10	1385566.430	673754.091	12" 90° BEND	126.25
11	00C10	1385566.430	673767.942	12" GV	126.25
12	00C10	1385566.430	673771.858	16" x 12" REDUCER	126.25
13	00C10	1385566.430	673774.534	16" X 12" TEE	126.25
14	00C10	1385562.946	673774.534	12" GV	126.25
15	00C10	1385453.983	673774.534	12" 90° BEND	126.25
16	00C10	1385453.983	673888.463	12" 90° BEND	126.25
17	00C10	1385416.084	673888.463	12" 90° BEND	126.00
18	00C10	1385416.084	673900.554	12" x 10" REDUCER	126.00 (2)
19	00C10	1385421.212	673895.753	16" 90° BEND	124.00 (2)
20	00C10	1385455.141	673895.753	24" x 16" REDUCER	124.00
21	00C10	1385459.400	673895.753	24" X 24" TEE	124.00
22	00C10	1385459.400	673890.265	24" GV	124.00
23	00C10	1385459.400	673567.158	24" 45° BEND	124.50
24	00C10	1385531.944	673494.614	24" 45° BEND	125.00
25	00C10	1385466.266	673781.508	8" X 6" TEE	128.50
26	00C10	1385466.266	673868.206	8" 45° BEND	128.50
27	00C10	1385471.471	673874.661	8" 45° BEND	128.50
28	00C10	1385502.628	673878.002	8" 45° BEND	127.50
29	00C10	1385530.925	673913.097	8" GV	127.50
30	00C10	1385532.870	673915.510	8" TEE	127.50
31	00C10	1385533.784	673918.420	12" 45° BEND	125.50
32	00C10	1385542.942	673834.431	12" 90° BEND	127.00
33	00C10	1385550.286	673834.431	12" 90° BEND	128.00
34	00C10	1385566.430	673834.431	16" X 12" TEE	128.00
35	00C10	1385566.430	673828.506	16" X 16" WYE	128.00
36	00C10	1385585.548	673847.618	16" GV	128.00
37	00C10	1385566.430	673838.525	16" 45° BEND	128.00
38	00C10	1385579.052	673851.142	16" GV	128.00
39	00C10	1385562.911	673893.637	24" GV	127.50

TABLE NOTES:

1. PIPE EL IN THE CLEARANCE TABLE ARE CENTER LINE ELEVATIONS UNLESS OTHERWISE NOTED.
2. COORDINATE ELEVATION OF OFFSITE DIRECTIONAL DRILLS TO CONFIRM FINAL TIE-IN ELEVATIONS

SHEET NOTES:

1. COORDINATE OTHER DISCIPLINE WORK ON SITE TO EFFICIENTLY COMPLETE THE PROJECT. REFER TO SITE CIVIL WORK ON DRAWINGS 00C01 THROUGH 00C08. COORDINATE ELECTRICAL WORK ON DRAWINGS 10E01. REFER TO SECTION 01140 FOR SEQUENCE AND CONSTRUCTION RESTRICTIONS. REFER TO 00C02 FOR SITE DEMOLITION.
2. REFER TO PIPING SCHEDULE IN SECTION 15052 FOR ADDITIONAL PIPING MATERIAL AND CLASSIFICATIONS.
3. REFER TO DRAWING 00C11 FOR THE CLEARANCE SCHEDULE. (01)

MATCHLINE SEE SHEET 00C10

REV	DATE	BY	DESCRIPTION

DESIGNED
HV
DRAWN
AG
CHECKED
DK
DATE
OCTOBER 2019

DWAYNE R. KREIDLER
LICENSE
No 54579
STATE OF
FLORIDA
PROFESSIONAL ENGINEER

PRINTED COPIES OF THIS DOCUMENT ARE NOT CONSIDERED SIGNED AND SEALED AND THE SIGNATURE MUST BE VERIFIED ON ANY ELECTRONIC COPIES.

POLK COUNTY

carollo®
200 East Robinson Street, Suite1400
Orlando, FL 32801
Phone (407) 478-4642
CA No. 8571

POLK COUNTY UTILITIES
GIBSON OAKS WATER PRODUCTION FACILITY
CIVIL
YARD PIPING - GIBSON OAKS

VERIFY SCALES
BAR IS ONE INCH ON ORIGINAL DRAWING
0 1"
IF NOT ONE INCH ON THIS SHEET, ADJUST SCALES ACCORDINGLY

JOB NO.
9621C.10
DRAWING NO.
00C09
SHEET NO.
13 OF 24

LAST SAVED BY: ggonzalez
PROJECT NO.
FILE NAME: 9621C10_00C09_LEVEL_II.dwg

MATCHLINE SEE SHEET 00C09

REV	DATE	BY	DESCRIPTION

DESIGNED
HV
DRAWN
AG
CHECKED
DK
DATE
OCTOBER 2019

DWAYNE R. KREIDLER
LICENSE
No 54579
STATE OF FLORIDA
PROFESSIONAL ENGINEER

PRINTED COPIES OF THIS DOCUMENT ARE NOT CONSIDERED SIGNED AND SEALED AND THE SIGNATURE MUST BE VERIFIED ON ANY ELECTRONIC COPIES.

POLK COUNTY

carollo®
200 East Robinson Street, Suite1400
Orlando, FL 32801
Phone (407) 478-4642
CA No. 8571

POLK COUNTY UTILITIES
GIBSON OAKS WATER PRODUCTION FACILITY
CIVIL
YARD PIPING - GIBSON OAKS

VERIFY SCALES
BAR IS ONE INCH ON ORIGINAL DRAWING
0 1"
IF NOT ONE INCH ON THIS SHEET, ADJUST SCALES ACCORDINGLY

JOB NO.
9621C.10
DRAWING NO.
00C10
SHEET NO.
14 OF 24

LAST SAVED BY: ggonzalez

PROJECT NO.
FILE NAME: 9621C10_00C10_LEVEL_II.dwg

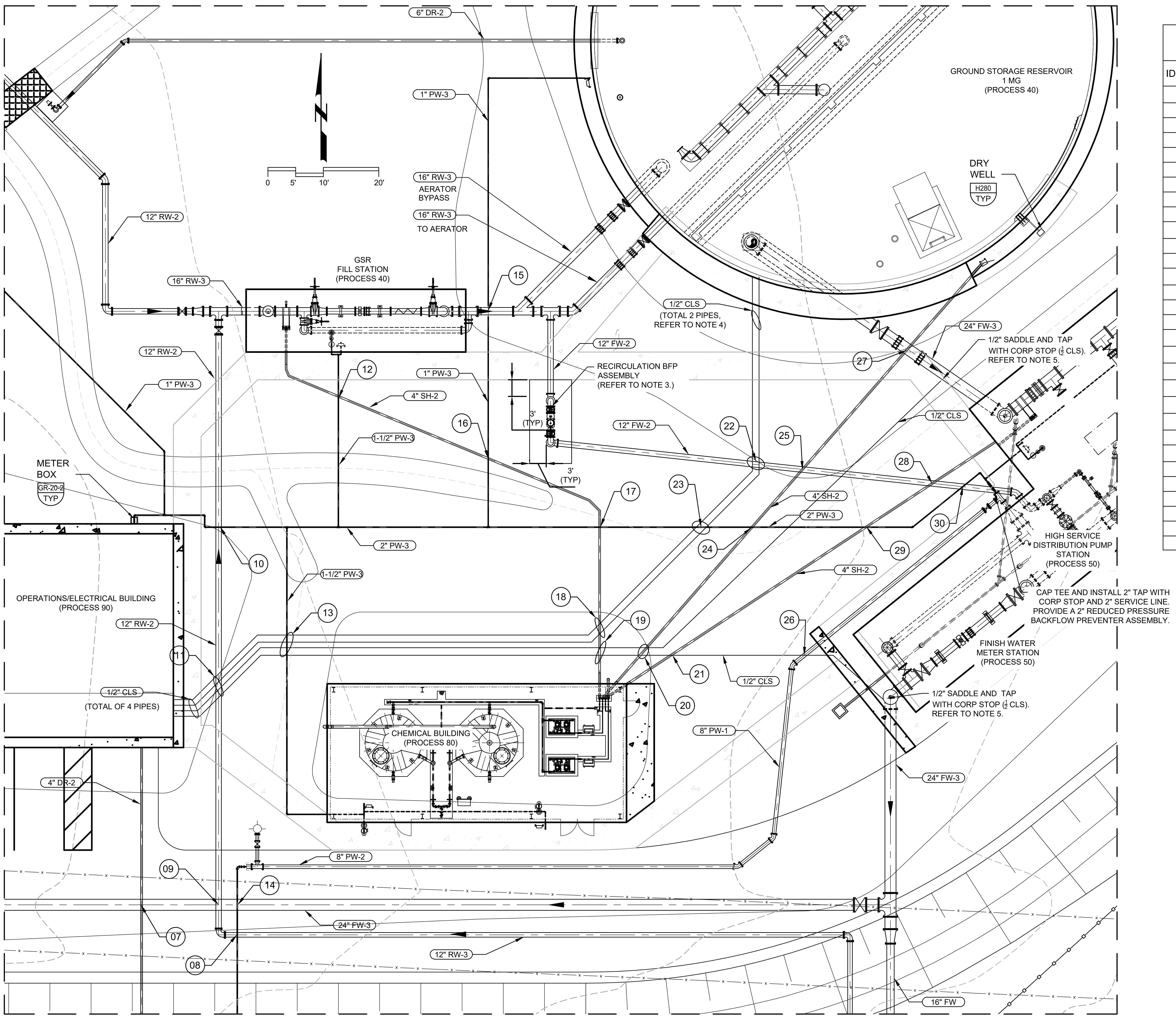

CLEARANCE TABLE					
ID NO.	PIPE 1 INFO	PIPE 1 EL (1)	PIPE 2 INFO	PIPE 2 EL (1)	DWGNO
01	12" RW (HDPE)	128.45 (CONFIRM)	24" RW-3	125.75	00C09
02	30" RCP	INV 128.10	1" PW-3	126.83	00C10
03	30" RCP	INV 127.89	24" FW-3	124.50	00C10
04	30" RCP	INV 127.86	2" FM	126.25	00C10
05	30" RCP	INV 127.84	2" PW-3	126.25	00C10
06	2" FM	129.00	24" FW-3	124.50	00C10
07	4" DR-2	INV 129.05	24" RW-3	124	00C11
08	2" PW-3	128.5	12" RW-2	126.75	00C11
09	12" RW-2	126.75	24" RW-3	124	00C11
10	2" PW-3	128.25	12" RW-2	126.5	00C11
11	1/2" CLS (TYP OF 4)	130	12" RW-2	126.75	00C11
12	4" SH-2	129.25	1-1/2" PW-3	128.25	00C11
13	1/2" CLS (TYP OF 4)	130	1-1/2" PW-3	129.5	00C11
14	"2"" PW-3"	128.5	"24"" RW-3"	124	00C11
15	1" PW-3	129.5	16" RW-3	128	00C11
16	4" SH-2	129.25	1" PW-3	128.25	00C11
17	4" SH-2	129.25	2" PW-3"	128.5	00C11
18	4" SH-2	130.5	1/2" CLS (TYP OF 2)	130	00C11
19	4" SH-2	130.5	1/2" CLS (TYP OF 2)	130	00C11
20	4" SH-2	130.5	1/2" CLS (TYP OF 2)	130	00C11
21	4" SH-2	130.5	1/2" CLS	130	00C11
22	1/2" CLS (TYP OF 2)	130	12" FW-2	126.75	00C11
23	1/2" CLS (TYP OF 2)	130	2" PW-3	129.5	00C11
24	"4"" SH-2"	130	"2"" PW-3"	129.5	00C11
25	4" SH-2	130	12" FW-2	126.5	00C11
26	1/2" CLS	130	8" PW-2	127.5	00C11
27	4" SH-2	130	24" PW-3	127.5	00C11
28	4" SH-2	130	12" FW-2	126	00C11
29	4" SH-2	130	2" PW-3	129.5	00C11
30	2" PW-3	130	12" FW-2	125.75	00C11

TABLE NOTES:

1. PIPE EL IN THE CLEARANCE TABLE ARE CENTER LINE ELEVATIONS UNLESS OTHERWISE NOTED.
2. COORDINATE ELEVATION OF OFFSITE DIRECTIONAL DRILLS TO CONFIRM FINAL TIE-IN ELEVATIONS

SHEET NOTES:

1. COORDINATE OTHER DISCIPLINE WORK ON SITE TO EFFICIENTLY COMPLETE THE PROJECT. REFER TO SITE CIVIL WORK ON DRAWINGS 00C01 THROUGH 00C08. COORDINATE ELECTRICAL WORK ON DRAWINGS 10E01. REFER TO SECTION 01140 FOR SEQUENCE AND CONSTRUCTION RESTRICTIONS. REFER TO 00C02 FOR SITE DEMOLITION.
2. REFER TO DWG 00C10 FOR CONTINUATION OF YARD PIPING.
3. PROVIDE THE RECIRCULATION BACKFLOW ASSEMBLY SIMILAR TO FIRE LINE ASSEMBLY PER PCU USSM DETAIL FIGURE WA-02. PROVIDE 12" THICK SLAB MINIMUM OF 3' FROM EDGE OF PIPE EACH WAY PER DETAIL S300. ELEVATION OF PIPING TO 18" ABOVE SLAB PROVIDE GALV STEEL PIPE SUPPORTS. DETECTOR METER AND BOLLARDS ARE NOT REQUIRED FOR ASSEMBLY LOCATION.
4. PROVIDE TWO SEPARATE $\frac{1}{2}$ SAMPLE LINES (CLS) FROM SAMPLE POINT 1 AT THE GSR (PROCESS 40) TO THE OPERATIONS/ELECTRICAL BUILDING (PROCESS 90) FOR ANALYSIS. SAMPLE PENTRATIONS SHALL BE A MINIMUM OF ONE FOOT ABOVE THE GSR FINISHED FLOOR WITH A $\frac{1}{2}$ SST BALL VALVE FOR ISOLATION. GSR PENTRATIONS SHALL BE SIMILAR TO DWG 40M06 PLAN A. BOTH SAMPLE PIPES WILL TERMINATE AT THE INTERIOR TO THE GSR AND LOOP AT THE ANALYZER LOCATION.
5. PROVIDE A SADDLE TAP AND CORP STOP ON THE FINISH WATER PIPING AT THE SUCTION PIPING OF THE GSR (PROCESS 40) FOR THE LOOPING AT THE ANALYZER FOR SAMPLE POINT 2 (FINISH WATER, POE). EXTEND TO THE ANALYZER NO. 2 AT THE OPERATIONS/ELECTRICAL BLDG (PROCESS 90).
6. PROVIDE A SADDLE TAP AND CORP STOP ON THE FINISH WATER PIPING AT THE DISCHARGE OF THE FINISH WATER METER STATION (PROCESS 50) EXTEND TO THE ANALYZER NO. 2 AT THE OPERATIONS/ELECTRICAL BLDG (PROCESS 90).
7. REFER TO PIPING SCHEDULE IN SECTION 15052 FOR ADDITIONAL PIPING MATERIAL AND CLASSIFICATIONS.
8. REFER TO DRAWING 00C09 FOR THE PIPING FITTING SCHEDULE.

LAST SAVED BY: ggonzalez

REV	DATE	BY	DESCRIPTION

DESIGNED
HV
DRAWN
GG
CHECKED
DK
DATE
OCTOBER 2019

DWAYNE R. KREIDLER
No 54579

PRINTED COPIES OF THIS DOCUMENT ARE NOT CONSIDERED SIGNED AND SEALED AND THE SIGNATURE MUST BE VERIFIED ON ANY ELECTRONIC COPIES.

POLK
COUNTY

carollo®
200 East Robinson Street, Suite1400
Orlando, FL 32801
Phone (407) 478-4642
CA No. 8571

POLK COUNTY UTILITIES

GIBSON OAKS WATER PRODUCTION FACILITY

CIVIL

YARD PIPING - DETAIL

VERIFY SCALES
BAR IS ONE INCH ON ORIGINAL DRAWING
0 1"
IF NOT ONE INCH ON THIS SHEET, ADJUST SCALES ACCORDINGLY

JOB NO.
9621C.10
DRAWING NO.
00C11
SHEET NO.
15 OF 24

PROJECT NO.
FILE NAME: 9621C10_00C11_LEVEL_II.dwg

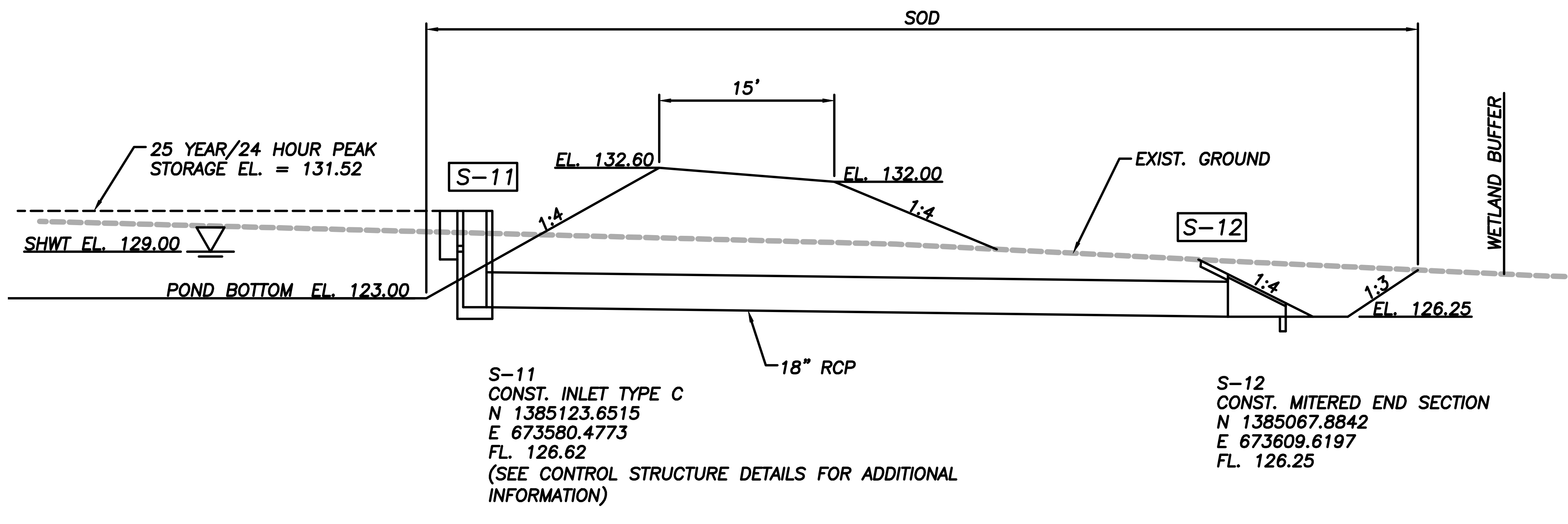

POND SECTION A–A
N.T.S.

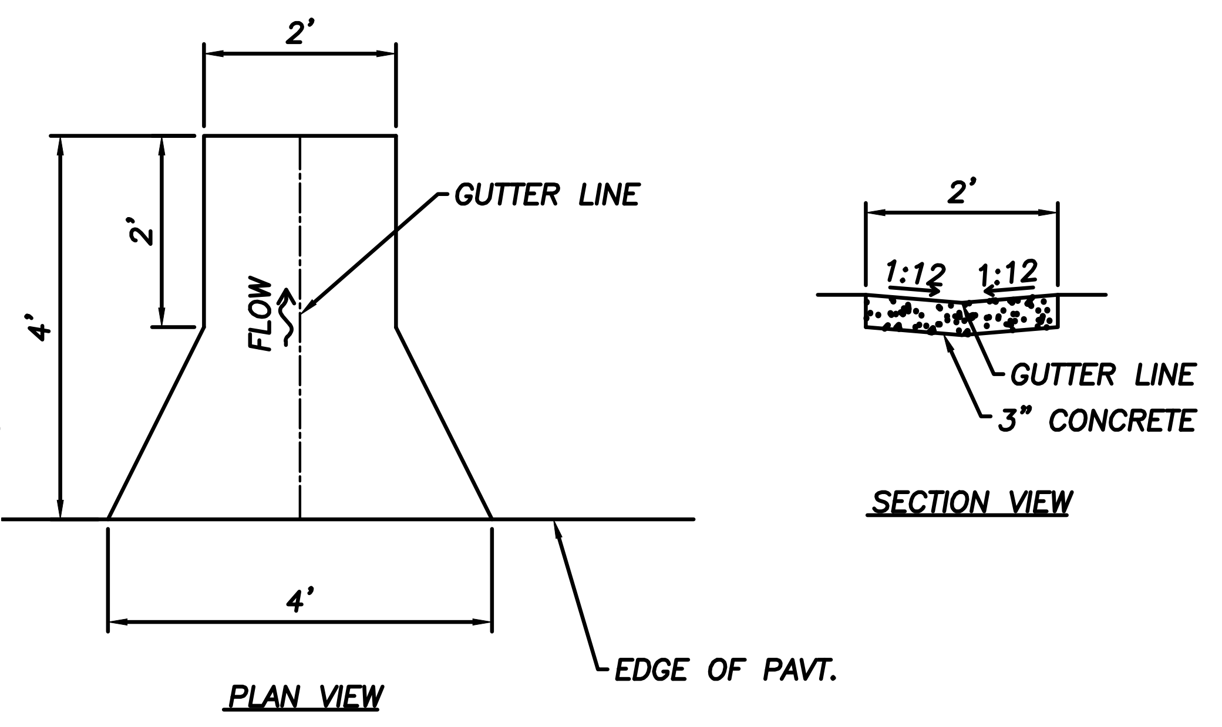

CONCRETE FLUME DETAIL
N.T.S.

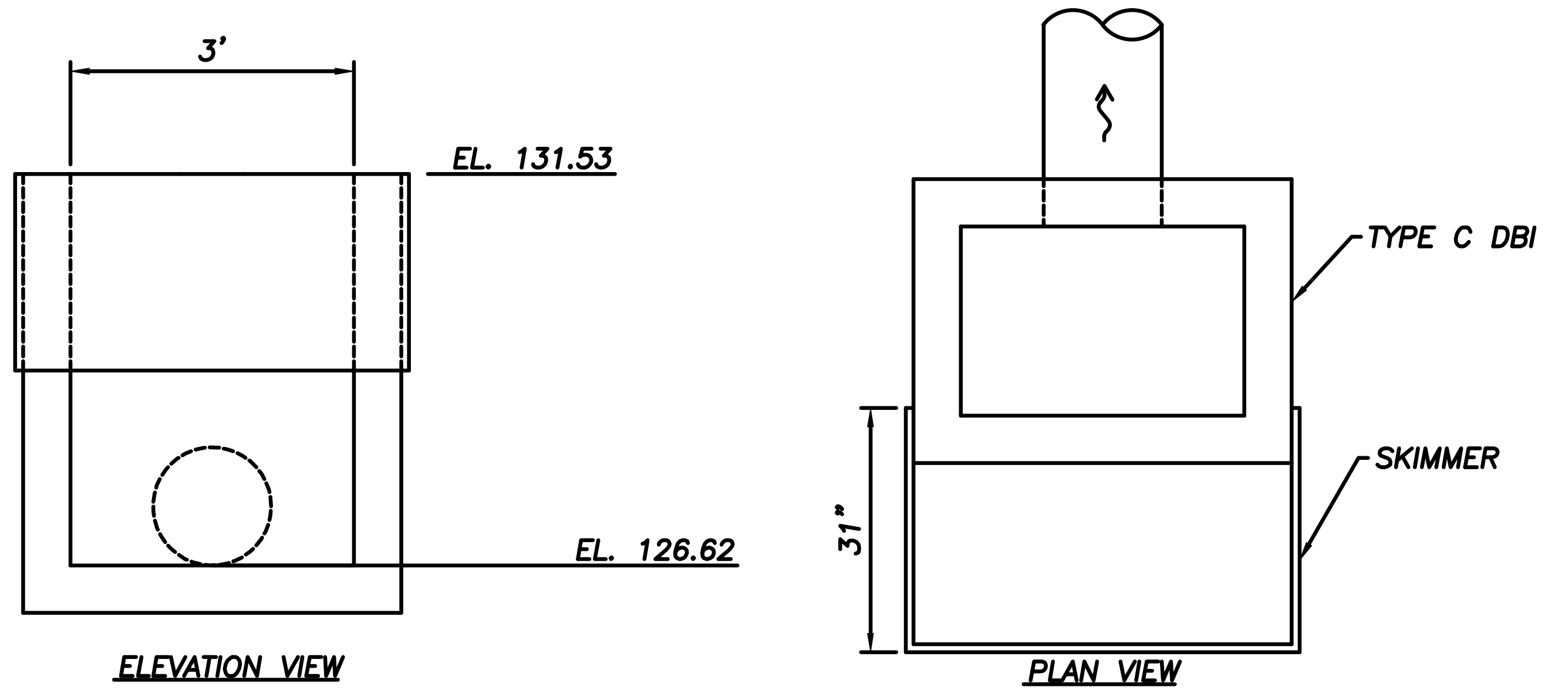

OUTLET CONTROL STRUCTURE DETAIL
N.T.S.

DRAINAGE NOTES:

1. FOR ADDITIONAL DETAILS ON DITCH BOTTOM INLETS REFER TO FDOT INDEX 425-0525.
2. FOR ADDITIONAL DETAILS ON MITERED END SECTIONS, REFER TO FDOT INDEX 430-021.
3. FOR ADDITIONAL SKIMMER DETAILS REFER TO FDOT INDEX 425-070.

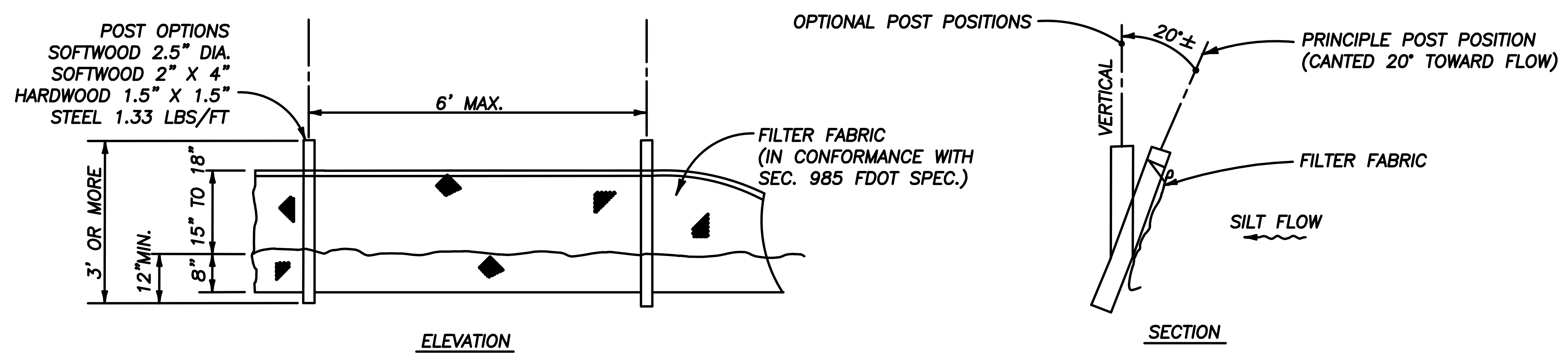

TYPE III SILT FENCE
N.T.S.

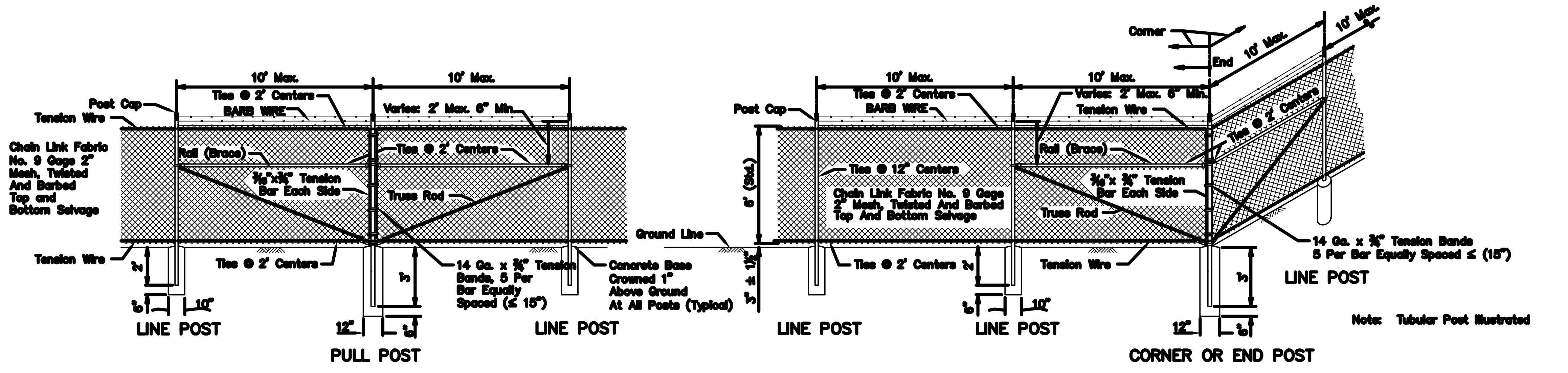

GENERAL NOTES

1. This fence to be used generally in urban areas.
2. For supplemental information refer to Specification 550.
3. Chain link fabric, post, truss rods, tension wires, tie wires, stretcher bars, gates and all miscellaneous fittings and hardware shall meet the requirements of AASHTO and ASTM signify current reference.
4. Fence Component Options:
   - A. Line post options:
     - (1) Galvanized steel pipe, Schedule 40– 1½" nominal dia. zinc galvanized at the rate of 1.8 oz./ft²: ASTM A53 Table 2 (Grade A or B), ASTM F1083, and AASHTO M111.
     - (2) Aluminum coated steel pipe: ASTM A53, Table 2 (Grade A or B): Schedule 40– 1½" nominal dia., 1.90" OD; coated at the rate 0.40 oz./ft.: AASHTO M111.
     - (3) Aluminum alloy pipe– 2" nominal dia.: ASTM B241 or B221, Alloy 6063, T6.
     - (4) Steel H–Beam– 1⅞"x 1⅝": Zinc Galv. 1.8 oz./ft.: AASHTO M111 and Detail.
     - (5) Aluminum alloy H–Beam– 1⅞"X 1⅝" Detail.
     - (6) Steel C– 1⅞"X 1⅝": Galv.: 1.8 oz/ft. zinc: AASHTO M111; OR , 0.9 oz./ft². zinc–5% aluminum–mischmetal: ASTM F1043 and Detail.
     - (7) Resistance welded steel pipe; 50,000 psi min. yield strength ASTM A569/A569M, A653/A653M or undepleted stock of discontinued A446/A446M base materials; ASTM F669 Group IV (Alternative Design); fence industry 2" OD, 1½" NPS, 1.900" dec. equiv., 0.120" min. wall thick. and min. wt. 2.28 lb./ft.; with ASTM F1043 metric equivalent internal coating Types A, B, C or D and external coating Types A, B, or C; the chromate conversion coating of external Type B shall have a thickness of 15µg/in². min. and the polymer film topcoat shall have a thickness of 0.0003" min.; internal and external coatings are not restricted to the combinations of Table 2, ASTM F1043.
   - B. Corner, end, and pull post options:
     - (1) Galvanized steel pipe, Schedule 40– 2" nominal dia. zinc galvanized at the rate of 1.8 oz./ft²: ASTM A53 Table X 2, ASTM F1083, and AASHTO M111.
     - (2) Aluminum coated steel pipe: ASTM A53 steel, X 2 Tables: Schedule 40; 2" nominal dia., 2.375" OD; coated at the rate 0.40 oz./ft.: AASHTO M111.
     - (3) Aluminum alloy pipe– 2⅜" nominal dia.: ASTM B241 or B221, Alloy 6063,T6.
     - (4) Resistance welded steel pipe; 50,000 psi min. yield strength ASTM A569/A569M, A653/A653M or undepleted stock of discontinued A446/A446M base materials; ASTM F669 Group IV (Alternative Design); fence industry 2⅜" OD, 2" NPS, 2.375" dec. equiv., 0.130"min. wall thick. and min. wt. 3.117 lb./ft.; with ASTM F1043 metric equivalent internal coating Types A, B, C or D and external coating Types A, B, or C; the chromate conversion coating of external Type B shall have a thickness of 15µg/in². min. and the polymer film topcoat shall have a thickness of 0.0003" min.; internal and external coatings are not restricted to the combinations of Table 2, ASTM F1043.
   - C. Rail options:
     - (1) Galvanized steel pipe, Schedule 40– 1¼" nominal dia. zinc galvanized at the rate of 1.8 oz./ft²: ASTM A53 Table X 2, ASTM F1083, and AASHTO M111.
     - (2) Aluminum coated steel pipe; ASTM A53 steel, X 2 Tables Schedule 40; 1¼" nominal dia., 1.660" OD; coated at the rate 0.40 oz./ft.: AASHTO M111.
     - (3) Aluminum alloy pipe– 1¼" nominal dia.: ASTM B241 or B221, Alloy 6063, T6.
     - (4) Resistance welded steel pipe; 50,000 psi min. yield strength ASTM A569/A569M, A653/A653M or undepleted stock of discontinued A446/A446M base materials; ASTM F669 Group IV (Alternative Design); fence industry 1⅝" OD, 1¼" NPS, 1.660" dec. equiv., 0.111" min. wall thick. and min. wt. 1.836 lb./ft.; with ASTM F1043 metric equivalent internal coating Types A, B, C or D and external coating Types A, B, or C; the chromate conversion coating of external Type B shall have a thickness of 15µg/in². min. and the polymer film topcoat shall have a thickness of 0.0003" min.; internal and external coatings are not restricted to the combinations of Table 2, ASTM F1043.
   - D. Chain link fabric options (2" mesh with twisted and barbed selvage top and bottom for all options except as described in Note 10):
     - (1) AASHTO M181 Type I – Zinc Coated Steel, No. 9 gage (coated wire diameter), coated at the rate of 1.8 oz/ft². (M181 Class D 2.0 oz./ft². modified to 1.8 oz./ft².).
     - (2) AASHTO M181 Type II –Aluminum Coated Steel, No. 9 gage (coated wire diameter), coated at the rate of 0.40 oz./ft².
     - (3) AASHTO M181 Type IV– Polyvinyl Chloride (PVC) Coated Steel, No. 9 gage (coated core wire diameter), core wire–zinc coated steel. PVC coating: M181 Class A (either extruded or extruded and bonded) or Class B (bonded). See table right. Unless the plans call for M181 standard colors medium green, dark green or black the coating color shall be soft gray matching that of No. 36622 of Federal Standard 595a.
   - E. Tension wire options:
     - (1) Steel wire No. 7 gage zinc galvanized at the rate of 1.2 oz./ft².: AASHTO M181.
     - (2) Aluminum alloy wire with a diameter of 0.1875" or larger conforming to the requirements of ASTM B211, Alloy 5056 Temper H38, or, Alclad Alloy 5056 Temper H192.
     - (3) Aluminum coated steel wire No.7 gage coated at the rate of 0.040 oz./ft².: AASHTO M181.
   - F. Tie wire and hog ring options:
     - (1) Steel wire No.9 gage zinc galvanized at the rate of 1.2 oz./ft².
     - (2) Aluminum alloy wire with a diameter of 0.1443" or larger conforming to the requirements of ASTM B211, Alloy 5056 Temper H38, or, Alclad Alloy 5056 Temper H192.
     - (3) Aluminum coated steel wire No. 7 gage coated at the rate of 0.040 oz./ft².
5. Unless a specific material is called for in the plans the Contractor may elect to use either a single type of material or a combination of material types from the component options listed in note 4. Combinations of optional materials are restricted as follows:
   - (a) Only one fabric optional material will be permitted between corner and/or end post assemblies.
   - (b) Only one line post optional material will be permitted between corner and/or end post assemblies.
   - (c) Pull post assemblies shall be optional materials identical to either the line post optional material or the corner and end post assembly optional material; but, pull post assemblies shall be the same optional material between any set of corner and/or end post assemblies.
6. Concrete for bases shall be Class NS concrete as specified in Section 347 of the Standard Specifications or a packaged, dry material meeting the requirements of a concrete under ASTM C–387. Materials for Class NS concrete may be proportioned by volume and/or by weight.
7. Line post shall be 8'–6" long (Standard). Line post are to be set in concrete as described above or by the following methods:
   - (a) In accordance with special details and/or as specifically described in the contract plans and specifications.
   - (b) In accordance with ASTM F567 Subsections 5.4 through 5.10 as approved by the Engineer. Line post installed in accordance with Section 5.8 shall be 9'–6" long.
   - (c) Post mounted on concrete structure or solid rock shall be mounted in accordance with the base plate detail "Fence Mounting On Concrete Endwalls And Retaining Wall", Sheet 3; or, by embedment in accordance with ASTM F567 Subsection 5.5.

   End, pull and corner post assemblies shall be in concrete as detailed above for all soil conditions other than solid rock. Post within assemblies that are located on concrete structures or solid rock shall be set by base plate or by embedment as prescribed under (b) above for line post.

   Line and assembly posts for 6' fence which must be lengthened due to a variation in the normal ground clearance, shall be set an additional 3" in depth for each 1' of of additional ground clearance.
8. Pull post shall be used at breaks in vertical grades of 15° or more, or at approximately 350' centers except that this maximum interval may be reduced by the Engineer on curves where the curve is greater than 3°.
9. Corner post are to be installed at all horizontal breaks in fence at 15° or more and as required at vertical breaks over 15° as determined by the Engineer.
10. When fence has an installed top of fabric height less than 6' knuckled top and bottom selvages shall be used unless the plans specifically identify locations for twisted selvage fabrics.
11. Unless sliding gates or special gates are called for in the plans, all gates shall be chain link swing gates meeting the material requirements described and as approved by the Engineer. Payment shall include the gates, single or double, all necessary hardware for installation and any additional length and/or size for posts at the opening. Gates shall be paid for under the contract unit price for Fence Gates, EA.
12. For construction purposes corner post assemblies shall consist of one corner post, two braces, two truss rods, and all necessary fittings and hardware as detailed. End post assemblies shall consist of one end post one brace, one truss rod and all necessary fittings and hardware as detailed.
13. In areas where there are physical constraints outside the right–of–way which restricts the fence construction the fabric may be installed on the inside of the posts.

TYPE "B" FENCE DETAIL
N.T.S.

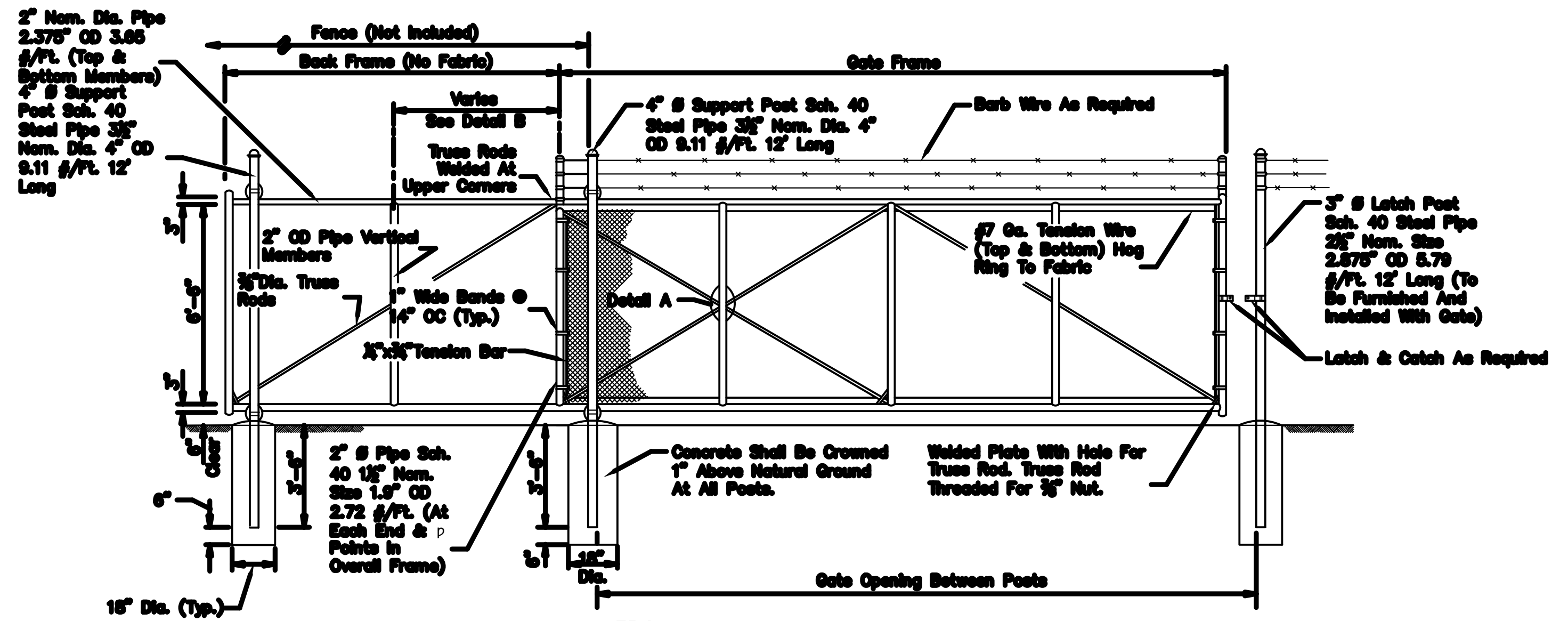

FRONT ELEVATION

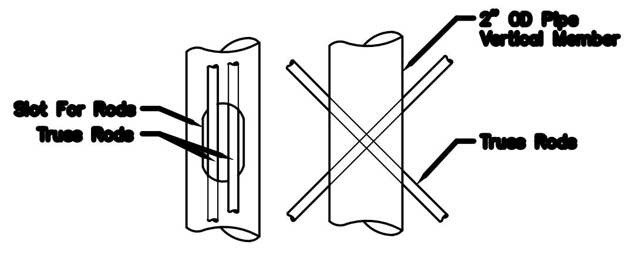

DETAIL A

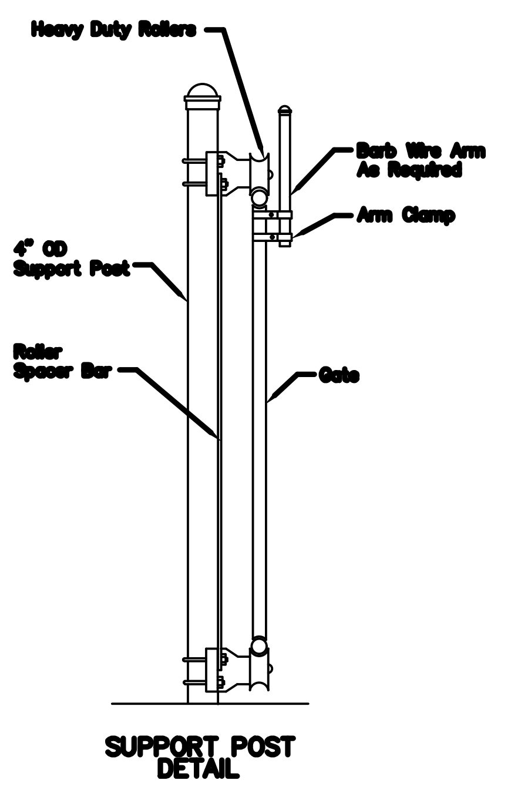

SUPPORT POST DETAIL

GATE OPENING	GATE FRAME	BACK FRAME
12'	12'–3"	6'
16'	16'–3"	8'
20'	20'–3"	10'
24'	24'–3"	12'

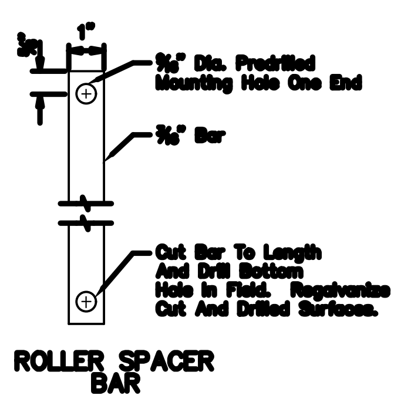

ROLLER SPACER BAR

GENERAL NOTES

1. Extruded, rolled or formed components that provide equal strength and stability may be used in lieu of the pipe components shown; and, internal rollers may be used in lieu of the external roller units shown.

   Gate components shall meet or exceed the protective coatings specified on Index 550–002.
2. Steel gate frame shall be fabricated prior to galvanizing, except that truss rods may be fabricated following frame galvanizing provided surfaces damaged during welding are galvanized in accordance with Section 24 of AASHTO M36; or, fabricated from pipe components with protective coating meeting the requirements of Index 550–002 that are tolerant of welding (low burn back), and a protective coating applied to the weld and damaged pipe surfaces that is equivalent to the protective coating of the fabricated pipe stock.
3. All fabric shall be knuckled top and bottom selvages.
4. Concrete for bases shall be either Class NS concrete in accordance with Specification 347 or a packaged, dry material meeting the requirements of a concrete under ASTM C–387. Materials for Class NS concrete may be proportioned by volume and/or by weight.
5. Cost of all gate components shall be included in the contract unit price for Sliding Fence Gate (Cantilever), EA.

DETAIL B

TYPE "B" SLIDING GATE DETAIL
N.T.S.

CONSTRUCTION DRAWINGS

John E. Howle State of Florida, Professional Engineer, License No. 27584. This item, including sheets 00C04 - 00C08 and 00GC01 - 00GC01, has been electronically signed and sealed by John E. Howle, PE on 10/31/2019 using SHA-1 authentication code. Printed copies of this document are not considered signed and sealed and the SHA authentication code must be verified on any electronic copies.

DESIGNED	JEH
DRAWN	MT
CHECKED	CRF
DATE	OCTOBER 2019

POLK COUNTY

carollo®
200 East Robinson Street, Suite1400
Orlando, FL 32801
Phone (407) 478-4642
CA No. 8571

CIVILSURV
A Tradition of Innovative Engineering

POLK COUNTY UTILITIES
GIBSON OAKS WATER PRODUCTION FACILITY
CIVIL
PAVING, GRADING, AND STORMWATER DETAILS

VERIFY SCALES
BAR IS ONE INCH ON ORIGINAL DRAWING
0 1"
IF NOT ONE INCH ON THIS SHEET, ADJUST SCALES ACCORDINGLY

JOB NO. 9621C.10
DRAWING NO. 00GC01
SHEET NO. 19 OF 24

File: C:\USERS\DKREIDLER\APPDATA\LOCAL\MICROSOFT\WINDOWS\INETCACHE\CONTENT.OUTLOOK\4JVS4ED\195001003_DETAILS.DWG Plot Date: 10/29/2019 6:22 PM Plotted by: DWAYNE KREIDLER

FENCE DETAIL

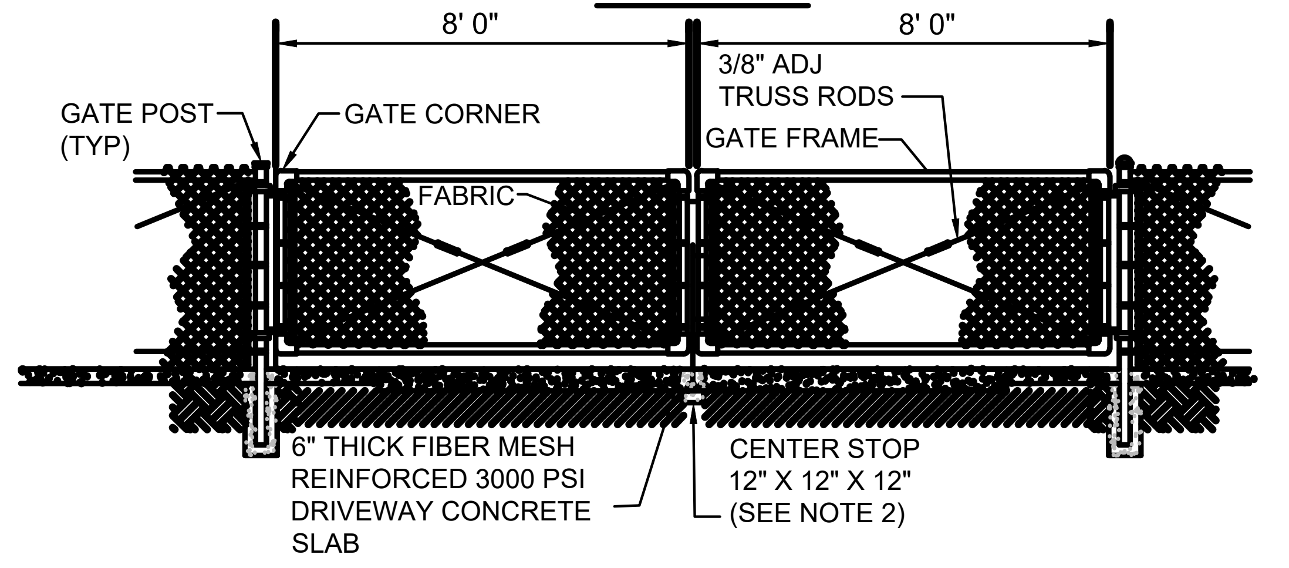

DOUBLE SWING GATE DETAIL

NOTES:

1. TRUSS RODS ARE REQUIRED FOR EACH GATE SECTION AND THE FIRST SPAN ON EACH SIDE OF A GATE AND EACH SIDE OF A CORNER POST ONLY.
2. GATE SHALL BE CAPABLE OF BEING LOCKED SECURELY WITH MINIMUM SPACE BETWEEN GATES.
3. FENCING SHALL BE BLACK, FACTORY APPLIED VINYL CLAD.
4. THREE STRANDS OF BARBED WIRE SHALL BE INSTALLED ON TOP ONLY IF APPROVED BY PCU. 2' FENCE AND GATE POST CAP EXTENSION SHALL BE INCORPORATED INTO FENCE AND/OR GATE DESIGN ACCORDINGLY. BARBED WIRE SHALL BE INSTALLED VERTICALLY AT GATE.
5. ELECTRO-MECHANICAL LOCKING DEVICE MAY BE USED IF REQUIRED BY PCU AND IN ACCORDANCE WITH APPROVED MATERIALS CHECK LIST.
6. MINIMUM 15' COMPLETELY CLEAR OPENING REQUIRED TO ACCOMMODATE HEAVY EQUIPMENT AND/OR EMERGENCY VEHICLES.
7. ELECTRO-MECHANICAL LOCKING DEVICE MAY BE USED AS APPROVED OR REQUESTED BY PCU AND IN ACCORDANCE WITH APPROVED MATERIALS CHECK LIST.

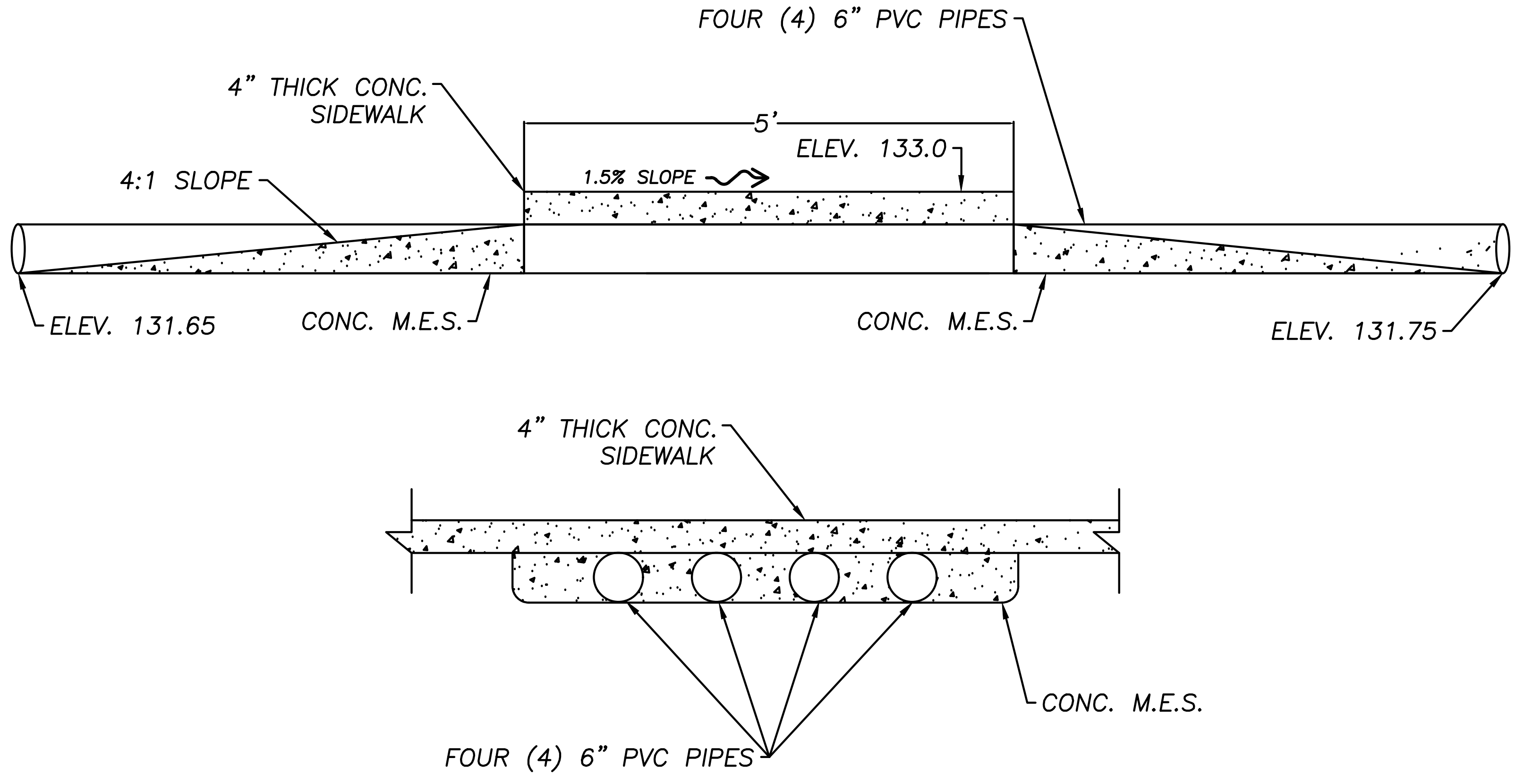

UNDER SIDEWALK DRAINAGE DETAIL

N.T.S.

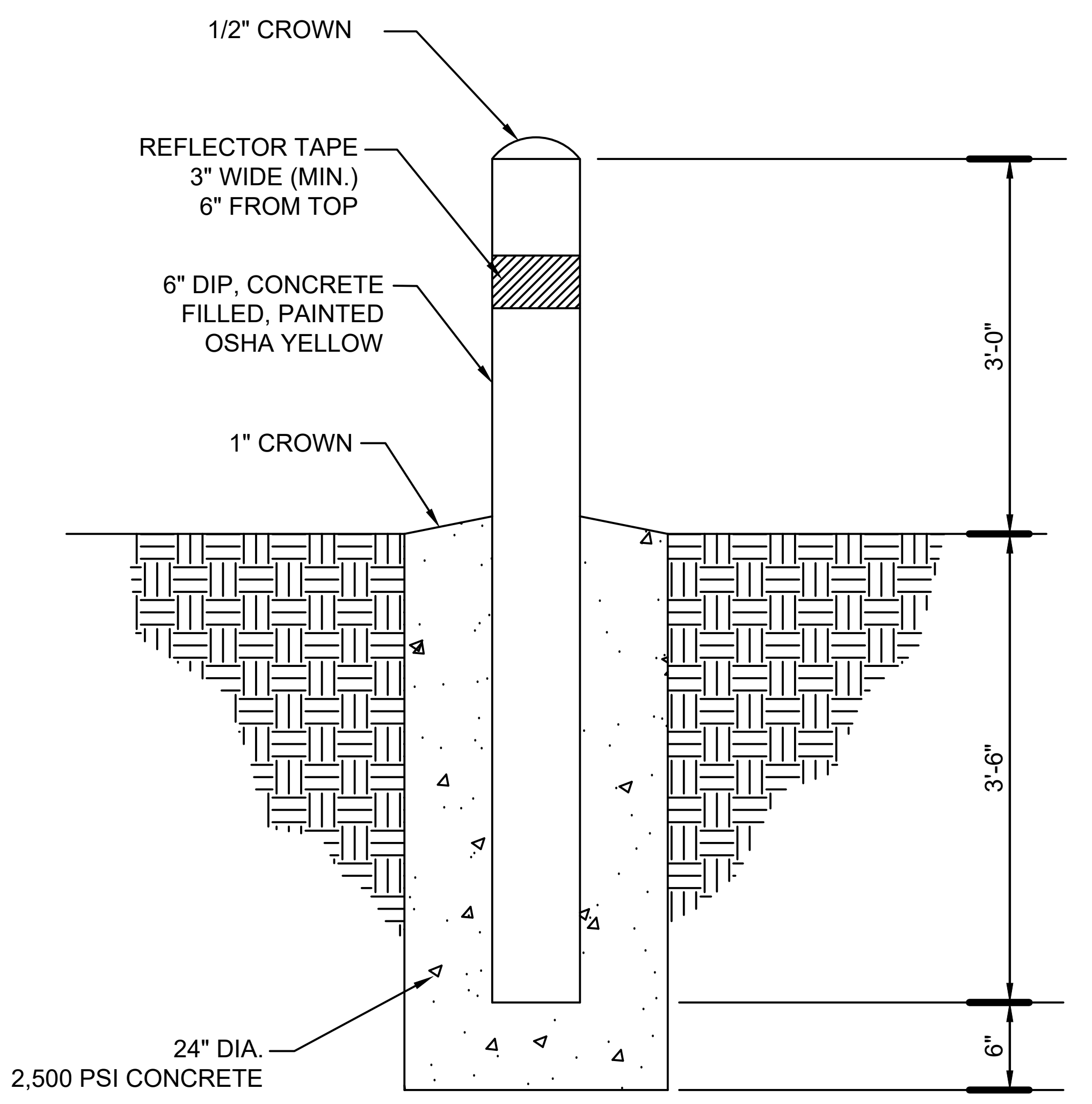

BOLLARD DETAIL

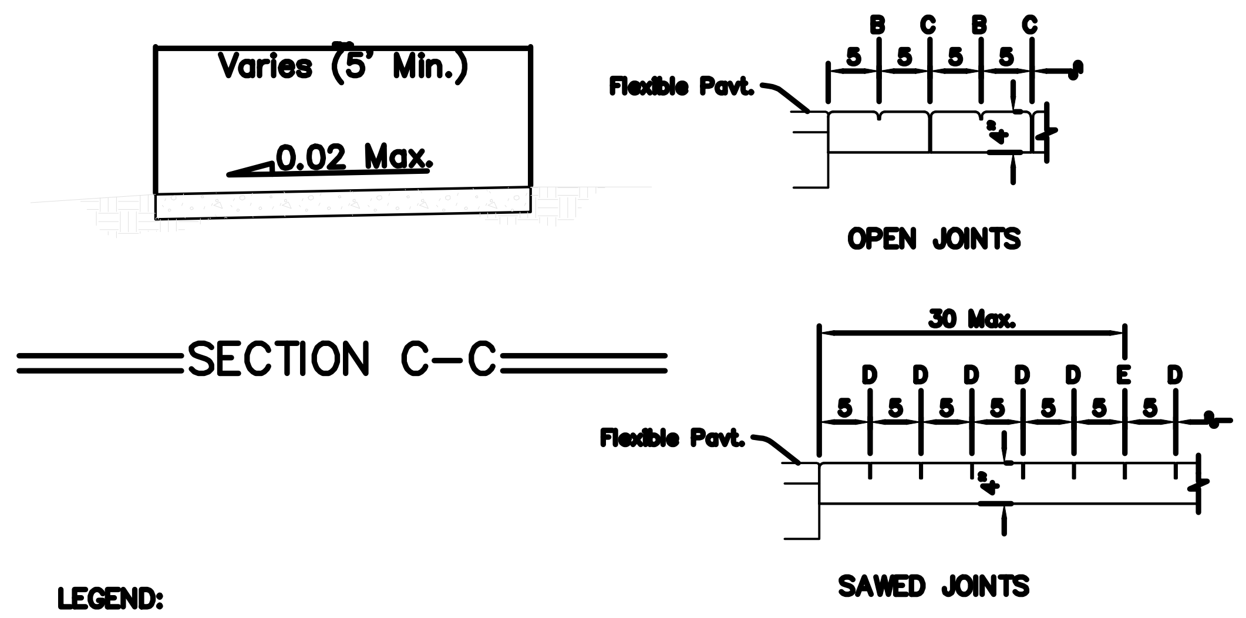

LONGITUDINAL SECTION

LEGEND:

A– 1/2" Expansion Joints (Preformed Joint Filler) between the sidewalk and; driveways, sidewalk–intersections, and all other fixed objects (e.g. drainage inlets and utility poles).

B– 1/8" Dummy Joints, Tooled

C– 1/8" Formed Open Joints

D– 3/16" Saw Cut Joints, 1 1/2" Deep (within 96 hours) Max. 5' Centers

E– 3/16" Saw Cut Joints, 1 1/2" Deep (within 12 hours) Max. 30' Centers Joint(s) Required When Length Exceeds 30'

F– 1/2" Expansion Joint When Run Of Sidewalk Exceeds 120'. Intermediate locations when called for in the plans or at locations as directed by the Engineer.

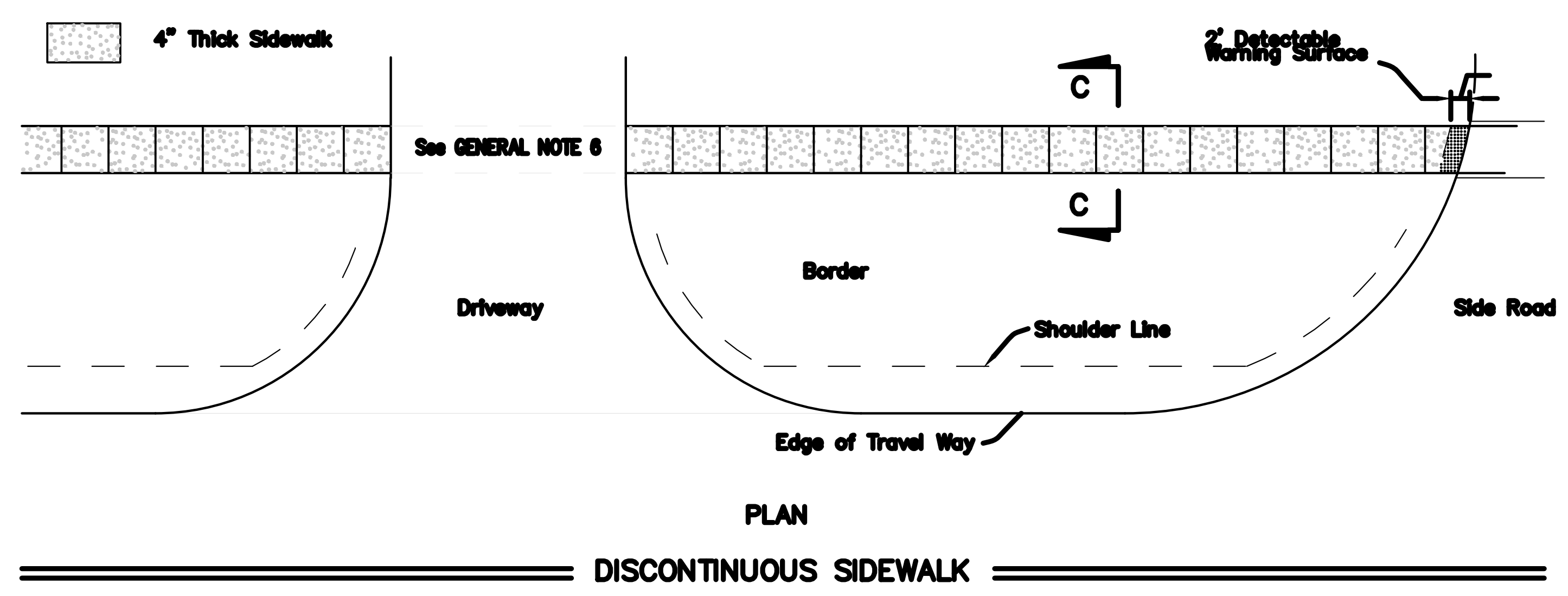

CONCRETE SIDEWALK ON FLUSH SHOULDER ROADWAYS

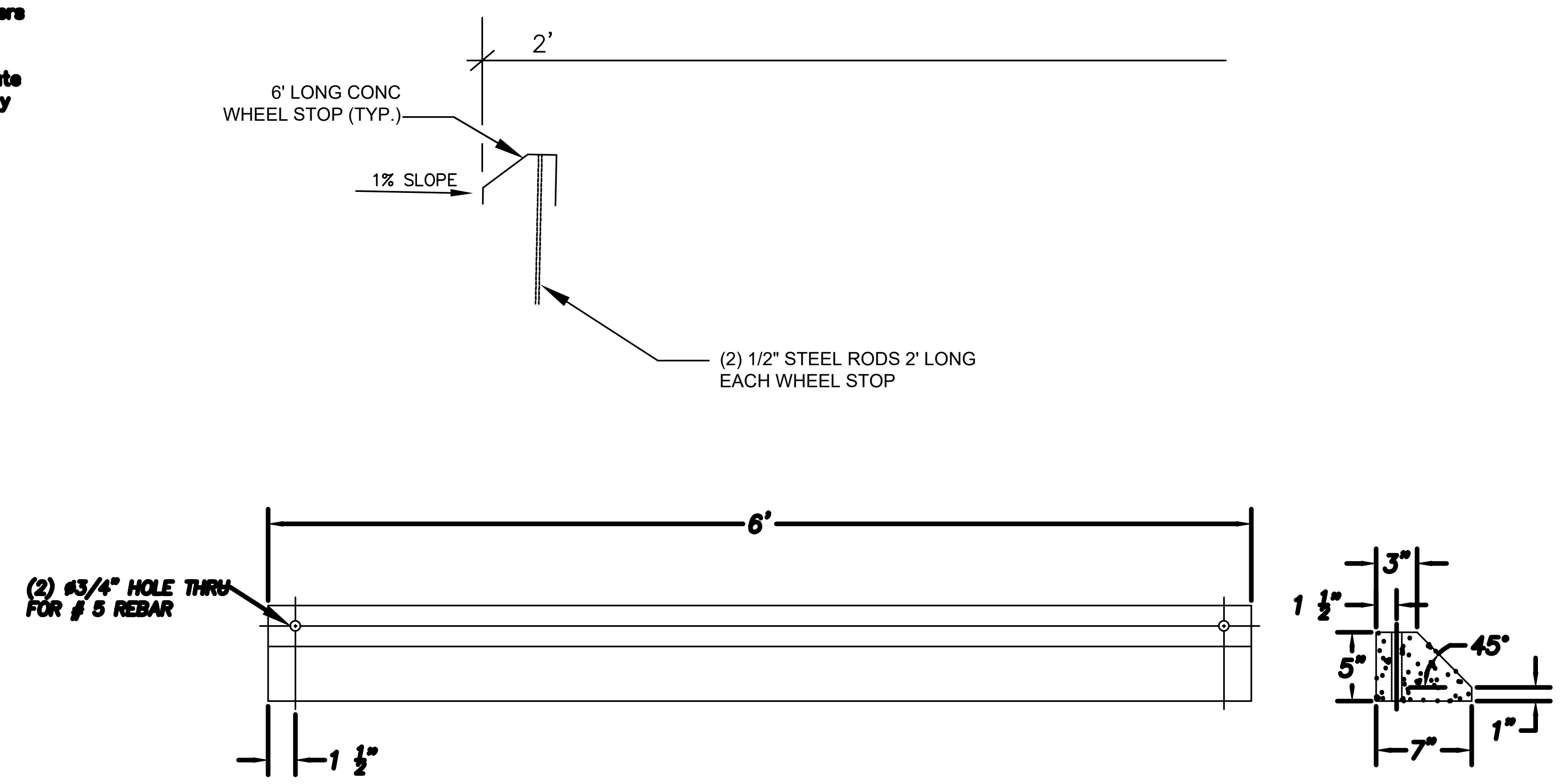

WHEEL STOP DETAIL

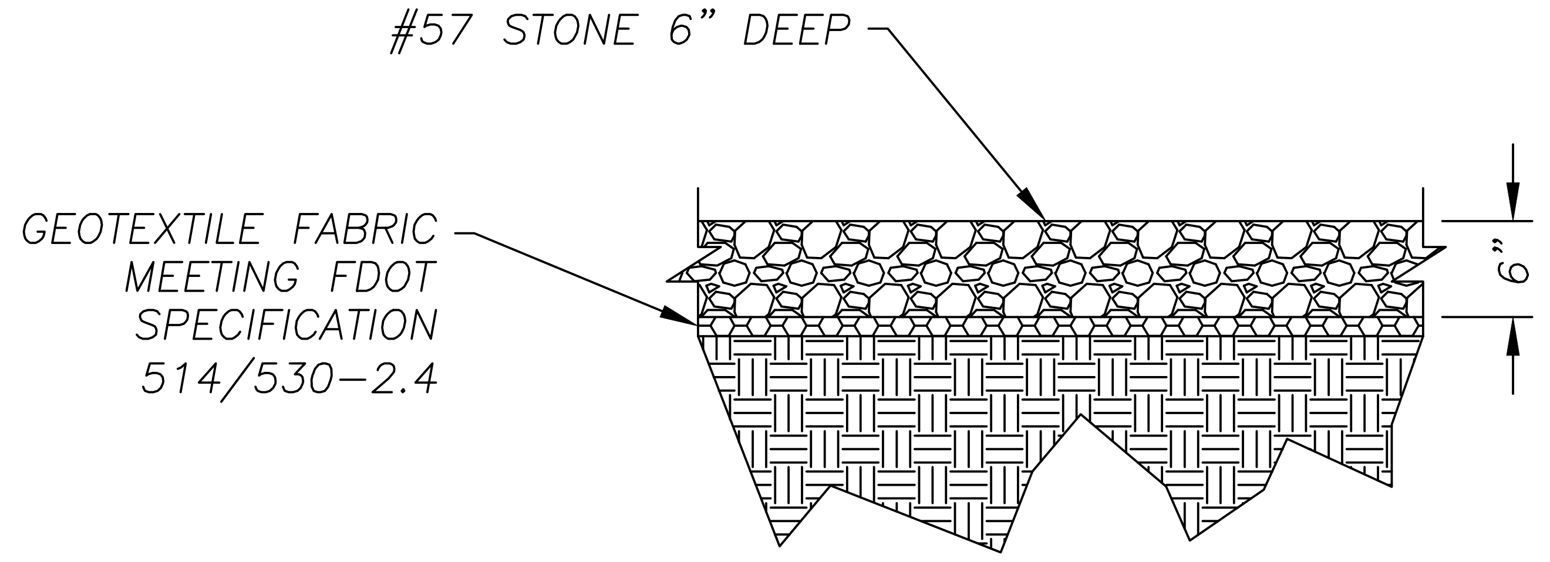

GRAVEL/ROCK DETAIL

GENERAL NOTES AND CONCRETE SIDEWALK ON CURBED ROADWAYS

1. Construct sidewalks in accordance with Specification 522. Use 6" concrete for Sidewalks and Curb Ramps Located within Curb Returns (See Plan View). Install all other concrete with thickness as shown, unless otherwise detailed in the Plans.
2. Include detectable warnings on sidewalk curb ramps in accordance with Index 522–002.
3. For Driveways see Index 522–003.
4. Bond breaker material can be any impermeable coated or sheet membrane or preformed material having a thickness of not less than 6 mils not more than 1/2".
5. Construct sidewalks with Edge Beam through the limits of any surface mounted Pedestrian/Bicycle Railing or Pipe Guiderail shown in the plans. (See RAILING DETAIL)

CONSTRUCTION DRAWINGS

John E. Howle State of Florida, Professional Engineer, License No. 27584. This item, including sheets 00C04 - 00C08 and 00GC01 - 00GC01, has been electronically signed and sealed by John E. Howle, PE on 10/31/2019 using SHA-1 authentication code. Printed copies of this document are not considered signed and sealed and the SHA authentication code must be verified on any electronic copies.

DESIGNED	JEH
DRAWN	MT
CHECKED	CRF
DATE	OCTOBER 2019

POLK COUNTY

carollo®
200 East Robinson Street, Suite1400
Orlando, FL 32801
Phone (407) 478-4642
CA No. 8571

CIVILSURV
A Tradition of Innovative Engineering

POLK COUNTY UTILITIES
GIBSON OAKS WATER PRODUCTION FACILITY
CIVIL
PAVING, GRADING, AND STORMWATER DETAILS

VERIFY SCALES
BAR IS ONE INCH ON ORIGINAL DRAWING
0 1"
IF NOT ONE INCH ON THIS SHEET, ADJUST SCALES ACCORDINGLY

JOB NO. 9621C.10
DRAWING NO. 00GC02
SHEET NO. 20 OF 24

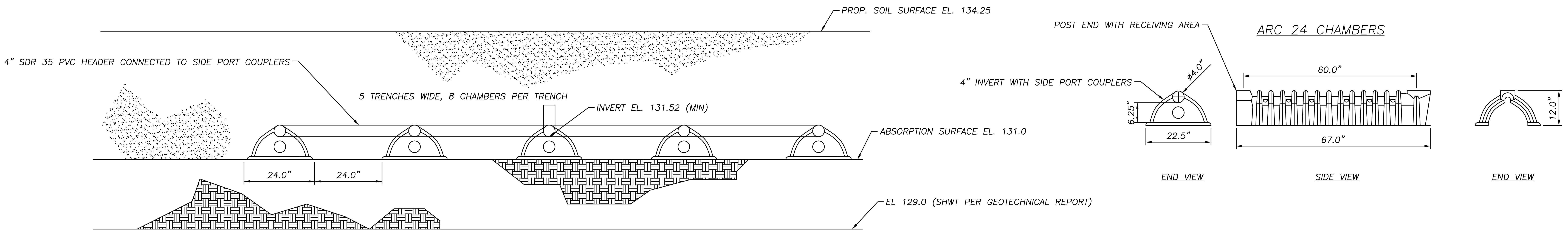

SEPTIC/LEACH FIELD TRENCH SIZING INFORMATION:
OFFICE BUILDING: 1595 SF
FLOW: 15 GPD/100 SF
TOTAL FLOW 239.25 GPD
MINIMUM TRENCH SIZE: 0.8 GAL/SF*DAY=299SF

SEPTIC TANK SIZE: 1350 GALLONS–ABILITY TO ADD ADDITIONAL BUILDING IF NEEDED

NOTE:

ALL ONSITE SEWAGE DISPOSAL SYSTEM EQUIPMENT SHALL BE SUPPLIED AND INSTALLED BY ONE CONTRACTOR/SUBCONTRACT. THAT SHALL INCLUDE THE PUMP STATION, SEPTIC TANK, AND LEACH FIELD AND ASSOCIATED DEVICES.

60" WIDE X 129" LONG, 8" LID WITH 3" THICK WALLS 1350 GAL TANK FLORIDA SEPTIC, INC – PRE–ENGINEERED

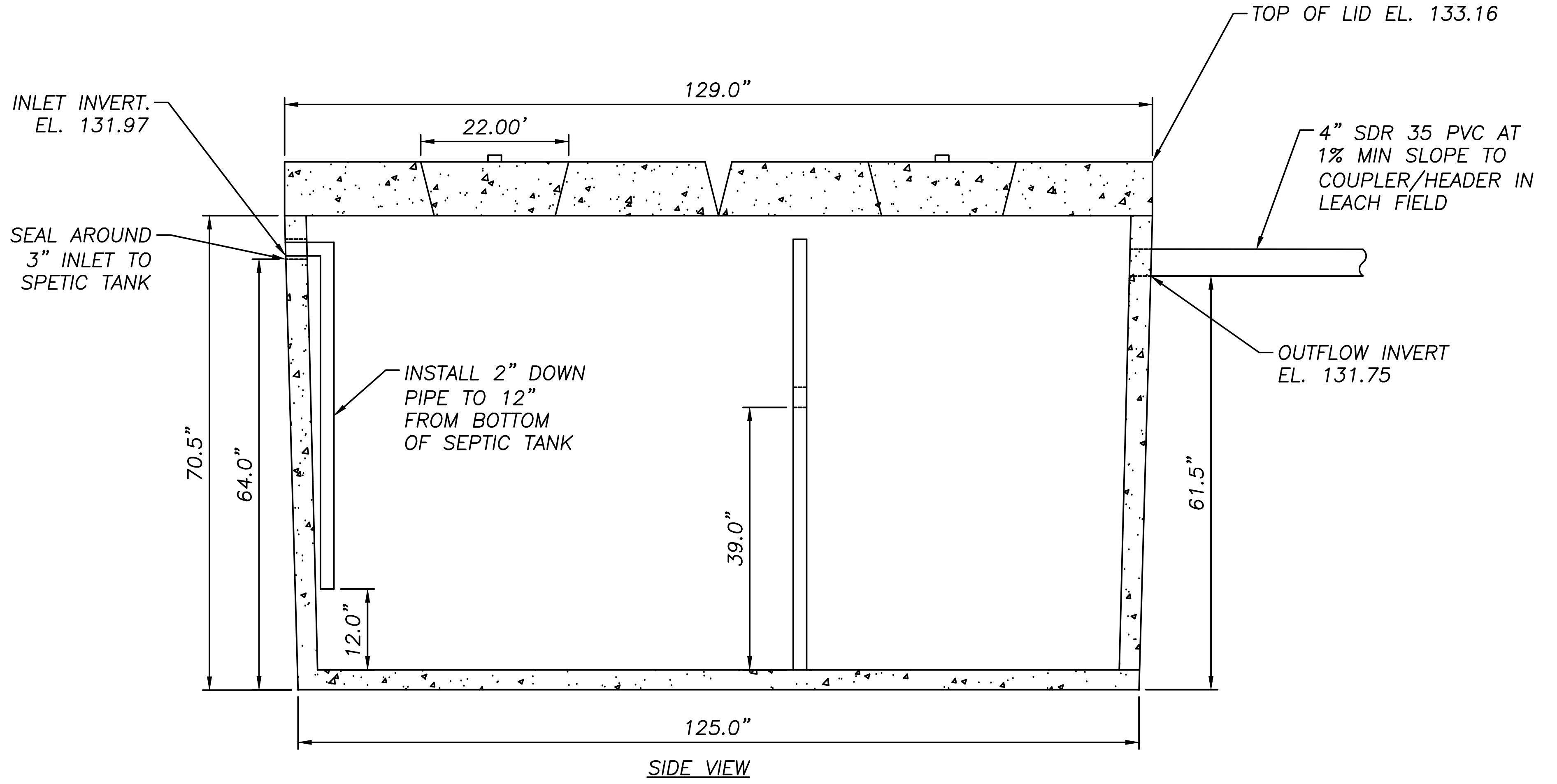

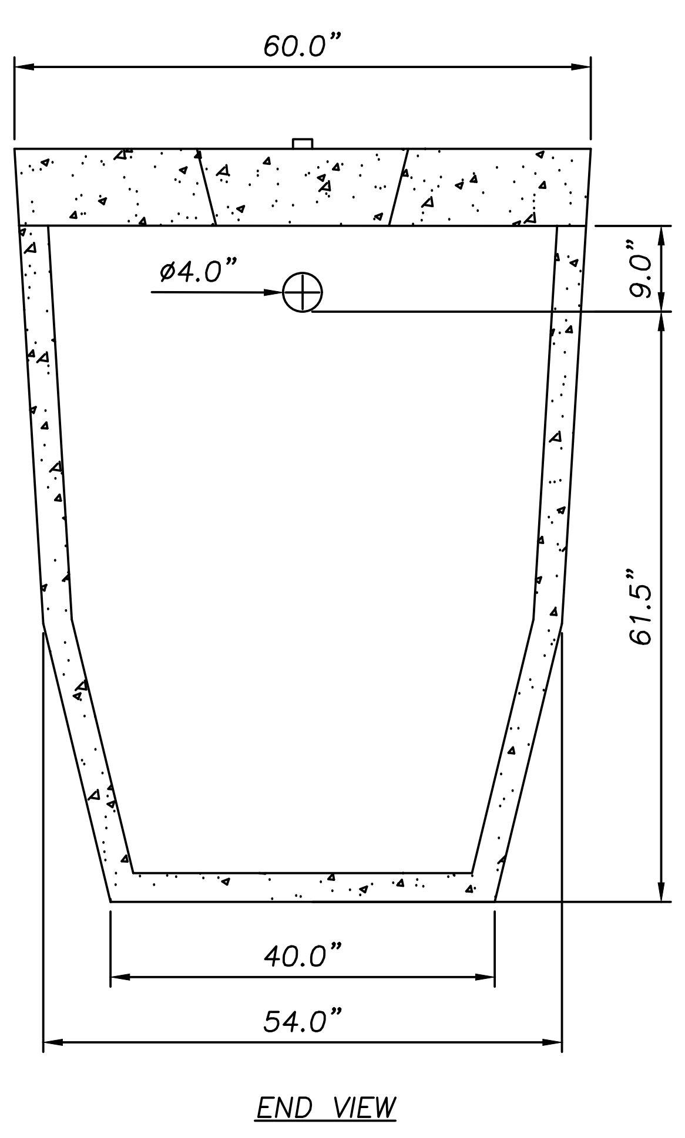

TANK: CATEGORY 3, 3" 1350 GALLON 2 COMPARTMENT TANK REINFORCED WITH FIBRILLATED POLYPROPYLENE FIBER. 3" WALLS AND 3" BOTTOM. INLET AND OUTLET RESILIENT CONNECTORS PER ASTM–923–98. CONNECTORS MUST BE USED WITH APPROVED CLAMP. CONNECTOR WILL ACCEPT 4" PVC PIPE.

TANK AND LIDS 4000 PSI CONCRETE AT 28 DAYS

3" 300 GALLON TANK WITH 8" LID

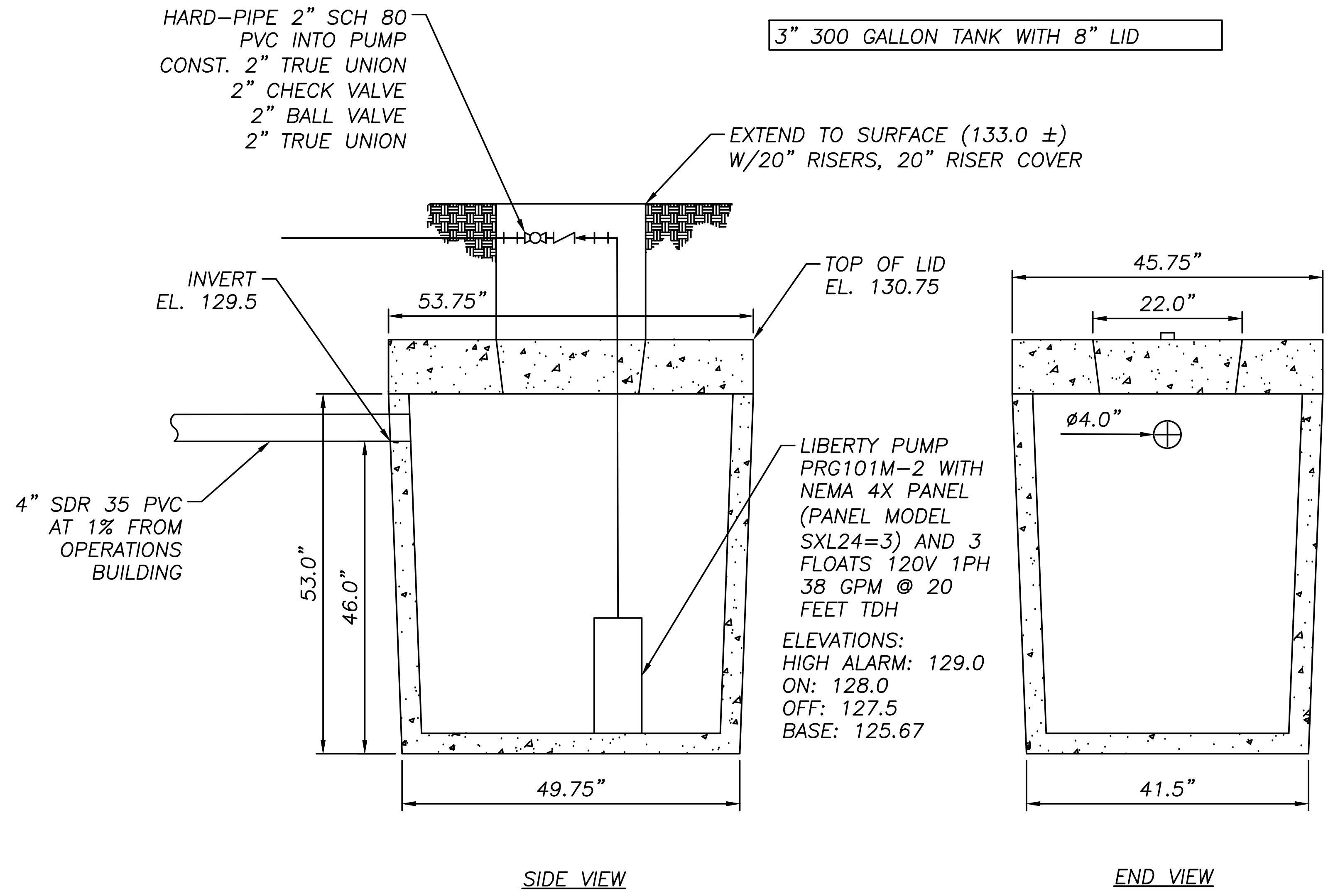

TANK: CATEGORY 4, 3" 300 GALLON 1 COMPARTMENT TANK REINFORCED WITH FIBRILLATED POLYPROPYLENE FIBER. 3" WALLS AND 3" BOTTOM. INLET AND OUTLET RESILIENT CONNECTORS PER ASTM–923–98. CONNECTORS MUST BE USED WITH APPROVED CLAMP. CONNECTOR WILL ACCEPT 4" PVC PIPE.

TANK AND LIDS 4000 PSI CONCRETE AT 28 DAYS

CONSTRUCTION DRAWINGS

John E. Howle State of Florida, Professional Engineer, License No. 27584. This item, including sheets 00C04 - 00C08 and 00GC01 - 00GC01, has been electronically signed and sealed by John E. Howle, PE on 10/31/2019 using SHA-1 authentication code. Printed copies of this document are not considered signed and sealed and the SHA authentication code must be verified on any electronic copies.

DESIGNED	JEH
DRAWN	MT
CHECKED	CRF
DATE	OCTOBER 2019

POLK
COUNTY

carollo®
200 East Robinson Street, Suite1400
Orlando, FL 32801
Phone (407) 478-4642
CA No. 8571

CIVILSURV
A Tradition of Innovative Engineering

POLK COUNTY UTILITIES
GIBSON OAKS WATER PRODUCTION FACILITY
CIVIL
ON-SITE SUBSURFACE WASTEWATER DISPOSAL SYSTEM

VERIFY SCALES
BAR IS ONE INCH ON ORIGINAL DRAWING
0 1"
IF NOT ONE INCH ON THIS SHEET, ADJUST SCALES ACCORDINGLY

JOB NO.
9621C.10
DRAWING NO.
00GC03
SHEET NO.
21 OF 24

THE STORMWATER POLLUTION PREVENTION PLAN (SWPPP) IS PROVIDED TO ASSIST THE CONTRACTOR IN DEVELOPING THE REQUIRED SITE SPECIFIC EROSION CONTROL PLAN AND OTHER ITEMS NECESSARY TO OBTAIN COVERAGE UNDER THE NATIONAL POLLUTANT DISCHARGE ELIMINATION SYSTEM (NPDES) CONSTRUCTION GENERIC PERMIT (CGP). REFER TO THE STATE OF FLORIDA EROSION AND SEDIMENT CONTROL DESIGNER AND REVIEWER MANUAL FOR ADDITIONAL REQUIREMENTS.

1.0 SITE DESCRIPTION:

1.1. NATURE OF CONSTRUCTION ACTIVITY:

THE PROJECT CONSIST OF THE CONSTRUCTION OF A NEW WATER PRODUCTION FACILITY IN POLK COUNTY. THIS INVOLVES SITE GRADING, CONSTRUCTION OF INFRASTRUCTURE ASSOCIATED WITH WATER PRODUCTION, CONSTRUCTION OF AN ACCESS ROAD AND SITE ENTRANCE, RE-GRADING OF SOME SITE AREAS, AND THE CONSTRUCTION OF A STORMWATER MANAGEMENT SYSTEM AND A STORM SEWER COLLECTION SYSTEM.

1.2. INTENDED SEQUENCE OF MAJOR SOIL DISTURBING ACTIVITIES:

IN THE CONTRACTOR'S EROSION AND SEDIMENT CONTROL PLAN, THE CONTRACTOR SHALL PREPARE A DETAILED CONSTRUCTION SCHEDULE TO INDICATE DATES OF MAJOR GRADING ACTIVITIES AND SEQUENCES OF TEMPORARY AND PERMANENT SOIL DISTURBING ACTIVITIES ON ALL PORTIONS OF THE PROJECT. FOR ADDITIONAL INFORMATION, REFER TO SECTION 4.7 OF THE NPDES CGP.

FOR EACH CONSTRUCTION PHASE, INSTALL PERIMETER CONTROLS PRIOR TO CLEARING AND GRUBBING OR ANY OTHER CONSTRUCTION ACTIVITIES. REMOVE PERIMETER CONTROLS ONLY AFTER ALL UPSTREAM AREAS ARE STABILIZED AND PERMANENT VEGETATION IS ESTABLISHED. THE CONTRACTOR WILL PROVIDE POLLUTION CONTROL BY IMPLEMENTING DUST CONTROL DURING ALL PHASES OF CONSTRUCTION.

LIST OF INTENDED ACTIVITIES:

1.2.1. INSTALLATION OF CONTROL MEASURES.

1.2.2. CLEARING, GRUBBING AND EXCAVATION FOR POND CONSTRUCTION.

1.2.3. CLEARING, GRUBBING AND EXCAVATION ASSOCIATED WITH PLACEMENT OF STORM SEWER, DITCH AND SWALE CONSTRUCTION.

1.2.4. EARTHWORK ASSOCIATED WITH ROADWAY, AND CONSTRUCTION OF GRAVITY WALLS, CURB, SUBGRADE, BASE, PAVEMENT, AND SIDEWALK AND OTHER SITE FEATURES.

1.3. PROJECT AREA ESTIMATES:

TOTAL SITE AREA: 14.95 ACRES.
TOTAL AREA TO BE DISTURBED: 6.29 ACRES.

1.4. RUNOFF DATA:

RUNOFF COEFFICIENTS BEFORE Cw(B), DURING Cw(D) AND AFTER Cw(A) CONSTRUCTION.

RUNOFF COEFFICIENTS FOR:
PERVIOUS AREAS: C=0.35
IMPERVIOUS AREAS: C=0.95

WEIGHTED RUN-OFF COEFFICIENT:
BEFORE: Cw(B) = 0.51 DURING: Cw(D) = 0.51–0.74 AFTER: Cw(A) = 0.74

1.5. DESCRIPTION OF SOIL DATA:

THE SCS SOIL SURVEY FOR POLK COUNTY INDICATES THREE (3) PRIMARY MAPPED SOIL UNITS ARE DEPICTED ON THE PROPERTY WITHIN THE PROJECT LIMITS. THESE MAPPED UNITS RANGE FROM VERY POORLY DRAINED SOILS TO MODERATELY WELL DRAINED.

MAP SYMBOL	SOIL NAME
14	SPARR SAND, 0 TO 5 PERCENT SLOPES
15	TAVARES FINE SAND, 0 TO 5 PERCENT SLOPES
17	SMYRNA AND MYAKKA FINE SANDS

1.6. OUTFALL INFORMATION:

THERE IS 1 OUTFALL.

1.6.1. DESCRIPTION: POND (SOUTH)
LOCATION: LAT. 28°08'40"N, LONG. 81°56'45"W
ESTIMATED DRAINAGE AREA: 6.29 AC.
RECEIVING WATER: WETLAND

1.7. SITE MAP

THE SITE MAP SHALL BE COMPRISED OF THE CONSTRUCTION PLANS AND THE CONTRACTOR'S SITE-SPECIFIC EROSION CONTROL PLAN.

1.8. RECEIVING WATERS

THE FACILITY'S STORMWATER MANAGEMENT SYSTEM WILL DISCHARGE TO A FRESHWATER EMERGENT WETLAND CLASSIFIED AS A PEM1F. WETLAND AND/OR SURFACE WATER IMPACTS SHALL BE LIMITED TO THE AREAS DESCRIBED IN THE APPROVED PERMITS FOR THE PROJECT.

1.9. STORMWATER MANAGEMENT (EXISTING/PROPOSED)

1.9.1. EXISTING – DRAINAGE FLOWS ARE TYPICALLY FROM NORTHWEST TO SOUTHEAST. AREAS OF SOIL DISTURBANCE AND AREAS TO BE STABILIZED ARE SHOWN IN THE PLANS. UNLESS OTHERWISE APPROVED BY THE PERMITS, THE CONSTRUCTION ACTIVITIES SHALL NOT MODIFY OR AFFECT THE EXISTING OFFSITE FLOW PATTERNS. IF NECESSARY, CONVEYANCE SYSTEMS WILL BE PUT IN PLACE TO BY-PASS ANY FLOWS FROM OFFSITE AREAS.

1.9.2. PROPOSED – THE PROPOSED POND WILL ATTENUATE AND TREAT THE RUNOFF PRODUCED BY THE PROPOSED CONSTRUCTION ACTIVITIES. TREATMENT AND ATTENUATION WILL BE ACHIEVED THROUGH WET CONSERVATION.

SEDIMENT BASINS, CONTAINMENT SYSTEMS AND/OR STORMWATER MANAGEMENT FACILITIES SHALL BE CONSTRUCTED DURING THE INITIAL PHASE OF CONSTRUCTION AND USED DURING CONSTRUCTION OF THE ROADWAY. THE OUTFALL STRUCTURES ARE TO BE PROTECTED WHEN TEMPORARY SEDIMENT BASINS, CONTAINMENT SYSTEMS OR PERMANENT STORMWATER MANAGEMENT FACILITIES ARE USED FOR EROSION AND SEDIMENT CONTROL TO PREVENT DOWNSTREAM SEDIMENTATION.

2.0. CONTROLS:

2.10. SEQUENCE OF SOIL DISTURBING ACTIVITIES AND IMPLEMENTATION OF CONTROLS

2.10.1. CONSTRUCTION ACTIVITIES – GENERAL

THE CONTRACTOR WILL BE REQUIRED TO PREPARE A SITE SPECIFIC EROSION CONTROL PLAN AS DEFINED IN STANDARD SPECIFICATION SECTION 104. THE CONTRACTOR ALSO WILL BE REQUIRED TO MODIFY THE PLAN OR MATERIALS TO ADAPT TO SEASONAL VARIATIONS.

OFF-SITE RUN-OFF SHOULD BE DIVERTED AWAY OR THROUGH THE CONSTRUCTION AREA, IF POSSIBLE. THIS ADDITIONAL FLOW, IF NOT DIVERTED, CAN ADD VOLUME AND SIZE REQUIREMENTS TO STRUCTURAL PRACTICES, REQUIRING MORE FREQUENT MAINTENANCE AND LIMITING EFFECTIVENESS OR EROSION AND SEDIMENT CONTROLS.

THE CONTRACTOR SHALL PROVIDE POLLUTION CONTROL BY IMPLEMENTING DUST CONTROL DURING ALL PHASES OF CONSTRUCTION. THIS WILL BE ACCOMPLISHED BY USING STREET OR VACUUM SWEEPERS OR WATERING. TRACTOR MOUNTED POWER BROOMS WILL NOT BE ALLOWED.

THE STORMWATER POLLUTION PREVENTION PLAN IS A PART OF THE CONTRACT DOCUMENTS. ANY CONSTRUCTION RELATED INFORMATION REQUIRED BY THE NPDES PERMIT BUT NOT SPECIFICALLY INDICATED IN THE STORMWATER POLLUTION PREVENTION PLAN CAN BE FOUND IN THE CONTRACT DOCUMENTS.

2.10.2. CONSTRUCTION ACTIVITIES – PHASING

CONSTRUCTION ACTIVITIES ON THIS PROJECT MAY BE CONDUCTED IN PHASES GENERALLY DESCRIBED BELOW. PRIOR TO COMMENCEMENT, THE CONTRACTOR WILL PROVIDE A DETAILED CONSTRUCTION SCHEDULE TO INDICATE DATES OF MAJOR GRADING ACTIVITIES AND DETERMINE SEQUENCING OF TEMPORARY AND PERMANENT SOIL DISTURBING ACTIVITIES ON ALL PORTIONS OF THE SITE.

PRIOR TO THE BEGINNING OF A PHASE, THE CONTRACTOR SHALL INSTALL EROSION AND SEDIMENT CONTROL ITEMS AS SPECIFIED IN THE CONTRACTOR'S EROSION CONTROL PLAN AS APPROVED BY POLK COUNTY, THE SUMMARY OF QUANTITIES AND STANDARD INDEXES 102, 103, 104, 105, 106 AND 199. APPLICABLE EROSION CONTROL DEVICES AND IMPLEMENTATION PROCEDURES ARE SUPPLIED IN THE CONTRACT DOCUMENTS AND STANDARD INDEXES.

FOR ANY PHASE OF CONSTRUCTION, THE CONTRACTOR IS RESPONSIBLE FOR PROVIDING SEEDING AND WATER AS SOON AS POSSIBLE FOR THE AREAS OF THE SITE WHERE CONSTRUCTION HAS TEMPORARILY CEASED, BUT IN NO CASE SHALL THE TIME BE GREATER THAN SEVEN (7) DAYS.

2.10.3. PER SECTION 5.4 OF THE NPDES CGP, STABILIZATION SHALL TAKE PLACE AS SOON AS PRACTICAL IN PORTIONS OF THE PROJECT WHERE CONSTRUCTION ACTIVITIES HAVE CEASED, BUT NO LATER THAN 7 DAYS AFTER ANY CONSTRUCTION ACTIVITY CEASES EITHER TEMPORARILY OR PERMANENTLY.

2.11. SEDIMENT AND EROSION CONTROLS

2.11.1. EROSION CONTROL MEASURES TO USED DURING CONSTRUCTION OPERATIONS TO PREVENT EROSION AND SEDIMENTATION.

CLEARING AND GRUBBING OPERATIONS ARE CONTROLLED SO AS TO MINIMIZED UNPROTECTED ERODIBLE AREAS EXPOSED TO WEATHER. AREAS OUTSIDE OF THE LIMITS OF CONSTRUCTION WILL NOT BE DISTURBED. EXCAVATED MATERIAL WILL NOT BE DEPOSITED IN LOCATIONS WHERE IT COULD BE WASHED AWAY BY HIGH WATER OR STORM WATER RUNOFF, AND STOCKPILES SHALL BE COVERED OR ENCIRCLED WITH SEDIMENT CONTAINMENT DEVICES. NEW AND EXISTING STRUCTURES WILL BE PROTECTED FROM SILTATION DURING CONSTRUCTION,

2.11.2. STABILIZATION PRACTICES

THE CONTRACTOR SHALL BE RESPONSIBLE FOR THE FOLLOWING MEASURES:

1) DEVELOPING A DETAILED EROSION AND SEDIMENT CONTROL PLAN. THE PLAN WILL INCLUDE:

   * PROJECT SCHEDULE WITH EROSION AND SEDIMENT CONTROL INSTALLATION AND MAINTENANCE TIED TO SPECIFIC DATES OR CONSTRUCTION ACTIVITIES.
   * ALTERATIONS TO THE DESIGN EROSION AND SEDIMENT CONTROLS DUE TO DIFFERENCES BETWEEN THE DESIGN PLANS AND ANTICIPATED CONSTRUCTION PHASING, IF USED, AND THE CONTRACTOR'S CONSTRUCTION METHODS AND PHASING.
   * NAME AND PHONE NUMBER OF CONTRACTOR'S REPRESENTATIVE RESPONSIBLE FOR EROSION AND SEDIMENT CONTROL INSTALLATION AND MAINTENANCE ON A 24 HOUR BASIS.

2) EROSION AND SEDIMENT CONTROL MEASURES ARE TO BE PLACED PRIOR TO, OR AS THE FIRST STEP IN CONSTRUCTION. SEDIMENT CONTROL DEVICES WILL BE EMPLOYED AS A PERIMETER DEFENSE AGAINST ANY TRANSPORTATION OF SILT OFF THE SITE. STABILIZATION MEASURES SHALL BE INITIATED AS SOON AS PRACTICAL IN PORTIONS OF THE SITE WHERE CONSTRUCTION ACTIVITIES HAVE CEASED TEMPORARILY OR PERMANENTLY, BUT IN NO CASE SHALL THE TIME BE GREATER THAN SEVEN (7) DAYS AFTER CONSTRUCTION ACTIVITY HAS TEMPORARILY OR PERMANENTLY CEASED. AREAS DISTURBED DURING CONSTRUCTION ARE TO BE SODDED OR SEEDED AND MULCHED. THE CONTRACTOR IS ALSO RESPONSIBLE FOR DOCUMENTING THIS PORTION OF THE STORMWATER POLLUTION PREVENTION PLAN IN THE STANDARD SPECIFICATION SECTION 104 EROSION CONTROL PLAN.

3) PERMANENT SOIL EROSION CONTROL MEASURES FOR SLOPES, CHANNELS, DITCHES OR ANY DISTURBED LAND AREAS SHALL BE COMPLETED IMMEDIATELY AFTER FINAL GRADE. WHEN IT IS NOT POSSIBLE TO PERMANENTLY PROTECT A DISTURBED AREA IMMEDIATELY AFTER GRADING OPERATION, TEMPORARY EROSION CONTROL MEASURES SHALL BE INSTALLED. ALL TEMPORARY PROTECTION SHALL BE MAINTAINED UNTIL PERMANENT MEASURES ARE IN PLACE AND ESTABLISHED. THE CONTRACTOR SHALL FURNISH, INSTALL, MAINTAIN, AND SUBSEQUENTLY REMOVE, ALL NECESSARY EROSION CONTROL, INCLUDING BUT NOT LIMITED TO SILT FENCES, HAY BALES, TURBIDITY BARRIERS AND ANY OTHER MISCELLANEOUS ITEMS AS INDICATED WITHIN THE CONTRACT DOCUMENTS, OR AS REQUIRED PER APPLICABLE STANDARDS OR THE PROJECTS ENGINEER.

2.2.3. STRUCTURAL PRACTICES:

IN THE CONTRACTOR'S SITE SPECIFIC SEDIMENT AND EROSION CONTROL PLAN, DESCRIBE THE PROPOSED STRUCTURAL PRACTICES TO CONTROL OR TRAP SEDIMENT AND OTHERWISE PREVENT THE DISCHARGE OF POLLUTANTS FROM EXPOSED AREAS OF THE SITE. SEDIMENT CONTROLS SHALL BE IN PLACE BEFORE DISTURBING SOIL UPSTREAM OF THE CONTROL. THE STRUCTURAL PRACTICES, AS APPROVED BY THE ENGINEER, MAY INCLUDE: SILT FENCES, SYNTHETIC BALES, ROCK BAGS, STAKED TURBIDITY BARRIERS, SOIL TRACKING PREVENTION DEVICES AT CONSTRUCTION ENTRANCES/EXITS, FLOATING TURBIDITY BARRIERS, INLET PROTECTION SYSTEMS INCLUDING SYNTHETIC BALES AND SANDBAGS

SILT FENCE SHALL BE USED ALONG THE LENGTH OF THE PROJECT WHERE THE EXISTING GROUND SLOPES AWAY FROM THE RIGHT OF WAY OR WHERE THERE IS POTENTIAL FOR SEDIMENT TO BE DIRECTED OFFSITE. SILT FENCES SHOULD ALSO BE USED IF: (1) WETLAND OR WATERS OF THE U.S. ARE INVOLVED, (2) UNDISTURBED VEGETATION OUTSIDE LIMITS OF CONSTRUCTION ARE NOT ADEQUATE TO FILTER RUN-OFF. STOCKPILE AREAS SHALL INCLUDE SILT FENCE AROUND THE PERIMETER

2.3. WATER QUALITY MONITORING

2.3.1. WATER QUALITY MONITORING SHALL BE CONDUCTED IN ACCORDANCE WITH THE SPECIAL CONDITIONS OF ANY ENVIRONMENTAL PERMIT, OR BY THE CONTRACTOR UPON THE OBSERVATION THAT WATER QUALITY STANDARDS MAY BE VIOLATED BY THE CONTRACTOR'S ACTIVITIES. MONITORING LOCATIONS MAY BE SPECIFIED IN THE ENVIRONMENTAL PERMIT OR MAY BE DESIGNATED BY THE CONTRACTOR AND APPROVED BY THE ENGINEER.

2.3.2. THE ENGINEER WILL BE RESPONSIBLE FOR MONITORING ANY ACTIVITIES FOR VIOLATION OF WATER QUALITY STANDARDS AS THEY RELATE TO TURBIDITY (NO GREATER THAN 29 NEPHELOMETRIC TURBIDITY UNITS (NTUs) ABOVE BACKGROUND OR GREATER THAN 0 NTUs ABOVE BACKGROUND FOR DIRECT DISCHARGES TO OUTSTANDING FLORIDA WATERS (OFWs)).

2.3.3. IF WATER QUALITY STANDARDS ARE VIOLATED, CONSTRUCTION SHALL BE STOPPED IMMEDIATELY. THE ENVIROMENTAL PERMIT CONDITIONS FOLLOWED AND EROSION AND SEDIMENT CONTROL DEVICES REEVALUATED AND APPROVED BY THE ENGINEER PRIOR TO ANY CONTINUATION OF ACTIVITY. MONITORING ACTIVITIES AND TURBIDITY READINGS SHALL BE RECORDED ON THE CONSTRUCTION INSPECTION REPORT AND CONTINUED UNTIL TURBIDITY READINGS FALL BELOW AN ACCEPTABLE LEVEL (LESS THAN 29 NTUs ABOVE BACKGROUND OR LESS THAN 0 NTUs ABOVE BACKGROUND FOR DIRECT DISCHARGES TO OFWs).

2.3.4. WATER QUALITY MONITORING MAY BE CONDUCTED DURING ANY PHASE OF CONSTRUCTION AS DIRECTED BY THE ENGINEER.

2.4. DEWATERING CONTROLS

2.4.1. THE SITE SPECIFIC SEDIMENT AND EROSION CONTROL PLAN SHALL INCLUDE A DESCRIPTION OF THE BMPs THAT WILL BE USED TO ENSURE THAT DISCHARGES OF NONCONTAMINATED GROUND WATER FROM DEWATERING OPERATIONS DO NOT CAUSE OR CONTRIBUTE TO VIOLATIONS OF STATE WATER QUALITY STANDARDS.

2.5. OTHER CONTROLS

2.5.1. THE SITE SPECIFIC SEDIMENT AND EROSION CONTROL PLAN SHALL IDENTIFY CHEMICAL AND FUEL STORAGE AREAS, MEANS OF MINIMIZING EXPOSURE TO STORMWATER, AND SPILL PREVENTION.

2.5.2. OFFSITE VEHICLE TRACKING & GENERATION OF DUST

2.5.3. IN THE SEDIMENT AND EROSION CONTROL PLAN, DESCRIBE THE PROPOSED METHODS FOR MINIMIZING OFFSITE VEHICLE TRACKING OF SEDIMENTS AND GENERATING DUST. THE PROPOSED METHODS SHALL INCLUDE AT LEAST THE FOLLOWING, UNLESS OTHERWISE APPROVED BY THE ENGINEER.

   * LOADED HAUL TRUCKS ARE TO BE COVERED BY A TARPAULIN.
   * REMOVE EXCESS DIRT FROM ROADS DAILY.
   * USING WATER TRUCKS DURING DUST-GENERATING ACTIVITIES.

2.0.1. SEDIMENT CONTROL ON THE ROADWAY MAY BE ACCOMPLISHED BY USING STREET OR VACUUM SWEEPERS.

3.0. MAINTENANCE

3.1. MAINTAIN AND REPAIR ALL EROSION AND SEDIMENT CONTROL DEVICES AND REMOVE EROSION AND SEDIMENT CONTROL DEVICES WHEN NOTICE OF TERMINATION IS MAILED. REMOVE AND PROPERLY DISPOSE OF SEDIMENT BUILDUP THROUGH THE LIFE OF THE INSTALLED EROSION AND SEDIMENT CONTROL DEVICES.

3.1.1. IF A REPAIR IS NECESSARY, IT WILL BE INITIATED WITHIN 24 HOURS OF NOTICE.

3.1.2. SEDIMENT BARRIERS SHALL BE REPLACED WHEN IT IS NO LONGER EFFECTIVE OR AS DIRECTED BY THE ENGINEER.

3.1.3. STABILIZED CONSTRUCTION ENTRANCES SHALL BE MAINTAINED TO PREVENT CLOGGING OF ROCK BEDDING WHICH MAY IMPEDE THE USEFULNESS OF THE STRUCTURE.

3.1.4. REMOVE SEDIMENT FROM SEDIMENT BASINS WHEN IT BECOMES MORE THAN HALF THE AVAILABLE VOLUME.

4.0. INSPECTION

INSTALL AND MAINTAIN RAIN GAUGES ON THE PROJECT SITE AND RECORD RAINFALL.

5.0. NON-STORMWATER DISCHARGES

THE SITE SPECIFIC EROSION AND SEDIMENT CONTROL PLAN SHALL IDENTIFY ALL ANTICIPATED NON-STORMWATER DISCHARGES AND DESCRIBE THE PROPOSED MEASURES TO PREVENT POLLUTION. THE PLAN SHALL INCLUDE PROCEDURES FOR SPILL CONTAINMENT, REPORTING AND RESPONSES. THE PLAN SHALL SPECIFY WHAT MANAGEMENT PRACTICES AND CONTAINMENT METHODS WILL BE USED TO PREVENT POTENTIAL POLLUTANTS (FUEL, LUBRICANTS, HERBICIDES, ETC.) FROM SPILLING ONTO THE SOIL OR INTO THE SURFACE WATERS. IF A SPILL DOES OCCUR OR IF CONTAMINATED SOIL OR GROUNDWATER IS ENCOUNTERED, CONTACT THE ENGINEER. IF A RELEASE CONTAINING HAZARDOUS SUBSTANCES OCCURS, CONTACT THE FLORIDA STATE WATCH OFFICE AT 800-320-0519 OR 850-413-9911 PER SECTION 9.2 OF THE CGP.

6.0. TRACKING AND REPORTING:

6.1. SUBMIT A WEEKLY REPORT TO THE OWNER DOCUMENTING THE DAILY INSPECTIONS AND MAINTENANCE OR REPAIRS TO THE EROSION AND SEDIMENT CONTROL DEVICES. MAINTAIN ALL REQUIRED REPORTS AND COMPLETE ALL SWPPP INSPECTION FORMS.

6.2. PREPARATION OF ALL THE CONTRACTOR'S REPORTS OF INSPECTION, MAINTENANCE AND REPAIRS REQUIRED OR THE CONTROL AND ABATEMENT OF EROSION AND WATER POLLUTION, SHALL BE INCLUDED IN THE INDIVIDUAL COSTS OF THE EROSION AND SEDIMENT CONTROL DEVICES.

CONSTRUCTION DRAWINGS

John E. Howle State of Florida, Professional Engineer, License No. 27584. This item, including sheets 00C04 - 00C08 and 00GC01 - 00GC01, has been electronically signed and sealed by John E. Howle, PE on 10/31/2019 using SHA-1 authentication code. Printed copies of this document are not considered signed and sealed and the SHA authentication code must be verified on any electronic copies.

DESIGNED JEH
DRAWN MT
CHECKED CRF
DATE OCTOBER 2019

POLK COUNTY

carollo®
200 East Robinson Street, Suite1400
Orlando, FL 32801
Phone (407) 478-4642
CA No. 8571

CIVILSURV
A Tradition of Innovative Engineering

POLK COUNTY UTILITIES
GIBSON OAKS WATER PRODUCTION FACILITY
CIVIL
STORMWATER POLLUTION PREVENTION PLAN

VERIFY SCALES
BAR IS ONE INCH ON ORIGINAL DRAWING
0 1"
IF NOT ONE INCH ON THIS SHEET, ADJUST SCALES ACCORDINGLY

JOB NO. 9621C.10
DRAWING NO. 00GC04
SHEET NO. 22 OF 24

$$$$DATE$$$$

$$$$USER$$$$

$$$$PLOT_INFO$$$$

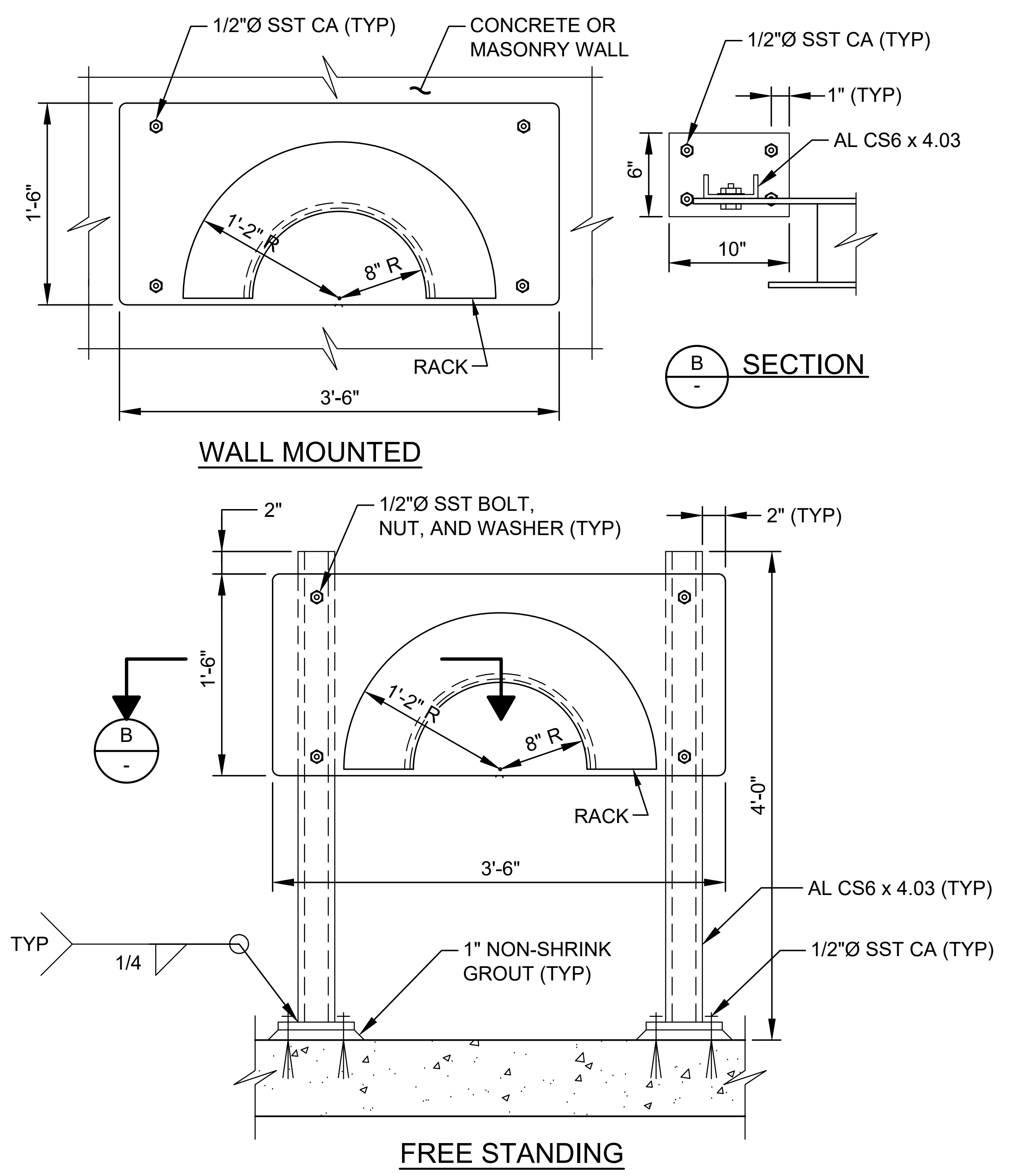

M280 HOSE RACK

TYP S SHEET 2 OF 2 09/30/07

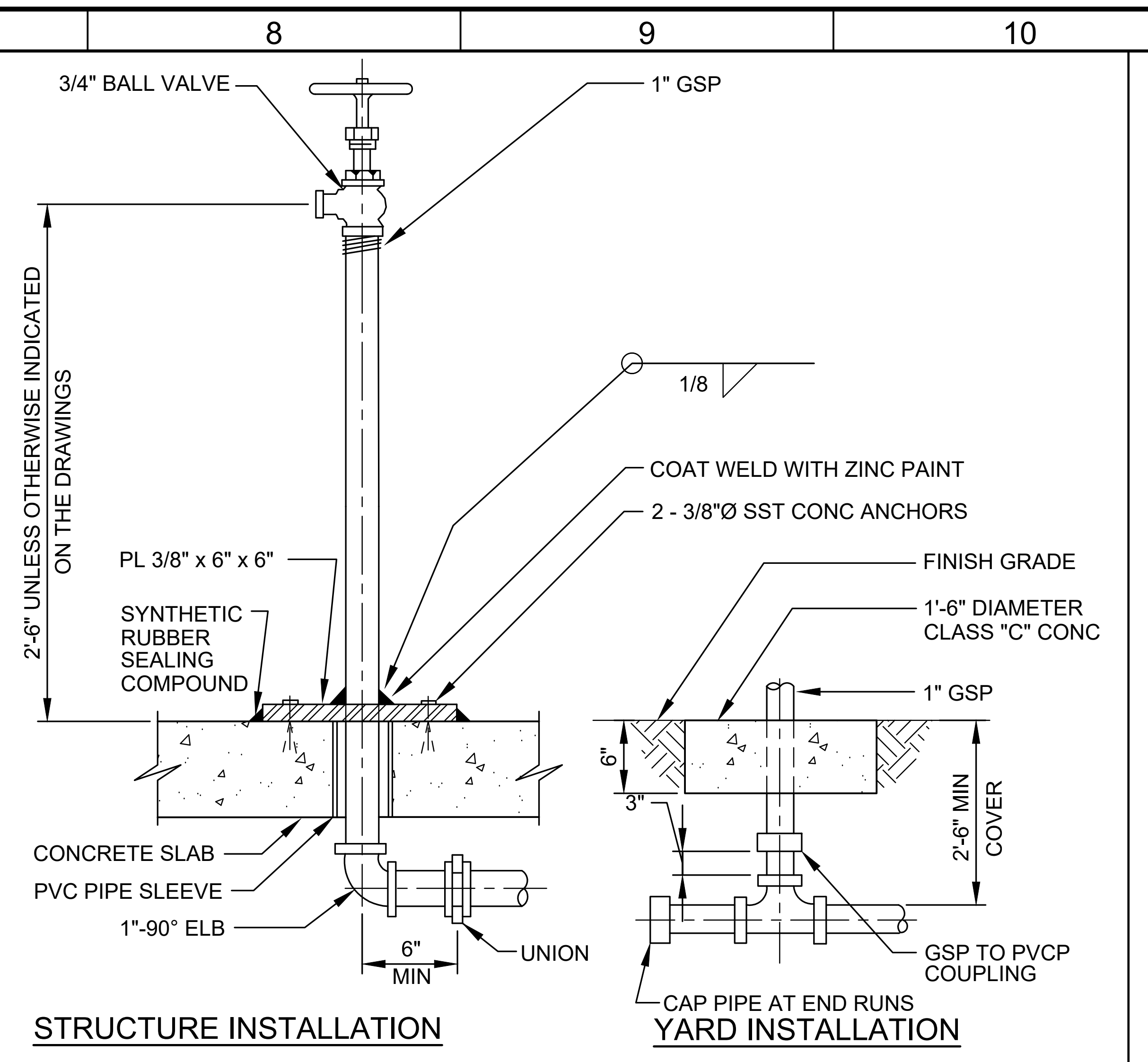

NOTES:

1. INSTALL HOSE RACK M280 TYP AT EACH HOSE VALVE.

M276 1" HOSE VALVE

TYP J 08/24/18

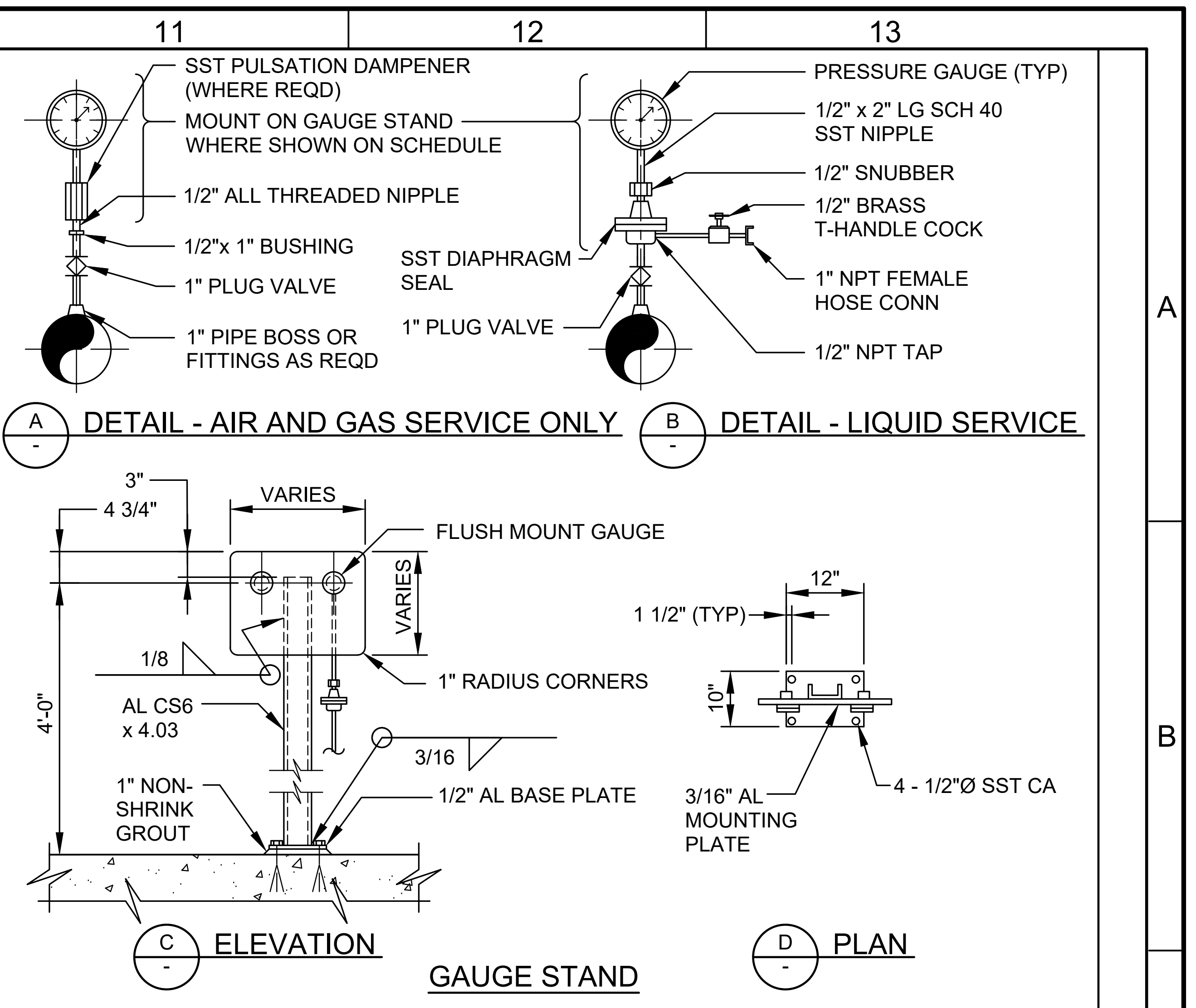

NOTES:

1. ALL GAUGES SHALL BE DUAL SCALE. SCALES ON THE GAUGE FACE SHALL BE MARKED IN PSIG AND FEET OF WATER (FOR POSITIVE READINGS) OR INCHES OF MERCURY (FOR VACUUM READINGS).
2. MOUNTING PLATE DIMENSIONS VARY ACCORDING TO SIZE AND NUMBER OF GAUGES REQUIRED.
3. AT GAUGE STAND, DIAPHRAGM SHALL BE LOCATED BELOW THE MOUNTING PLATE. ONE INCH PIPE SHALL BE ROUTED BETWEEN DIAPHRAGM AND SERVICE PIPE PLUG VALVE. CROSSES WITH THREADED PLUGS SHALL BE USED IN LIEU OF 90° ELBOWS, WITH AT LEAST ONE UNION PER CROSS.
4. COAT ALUMINUM IN CONTACT WITH CONCRETE AS SPECIFIED.

M294 PRESSURE GAUGE DETAILS

TYP S 08/01/05

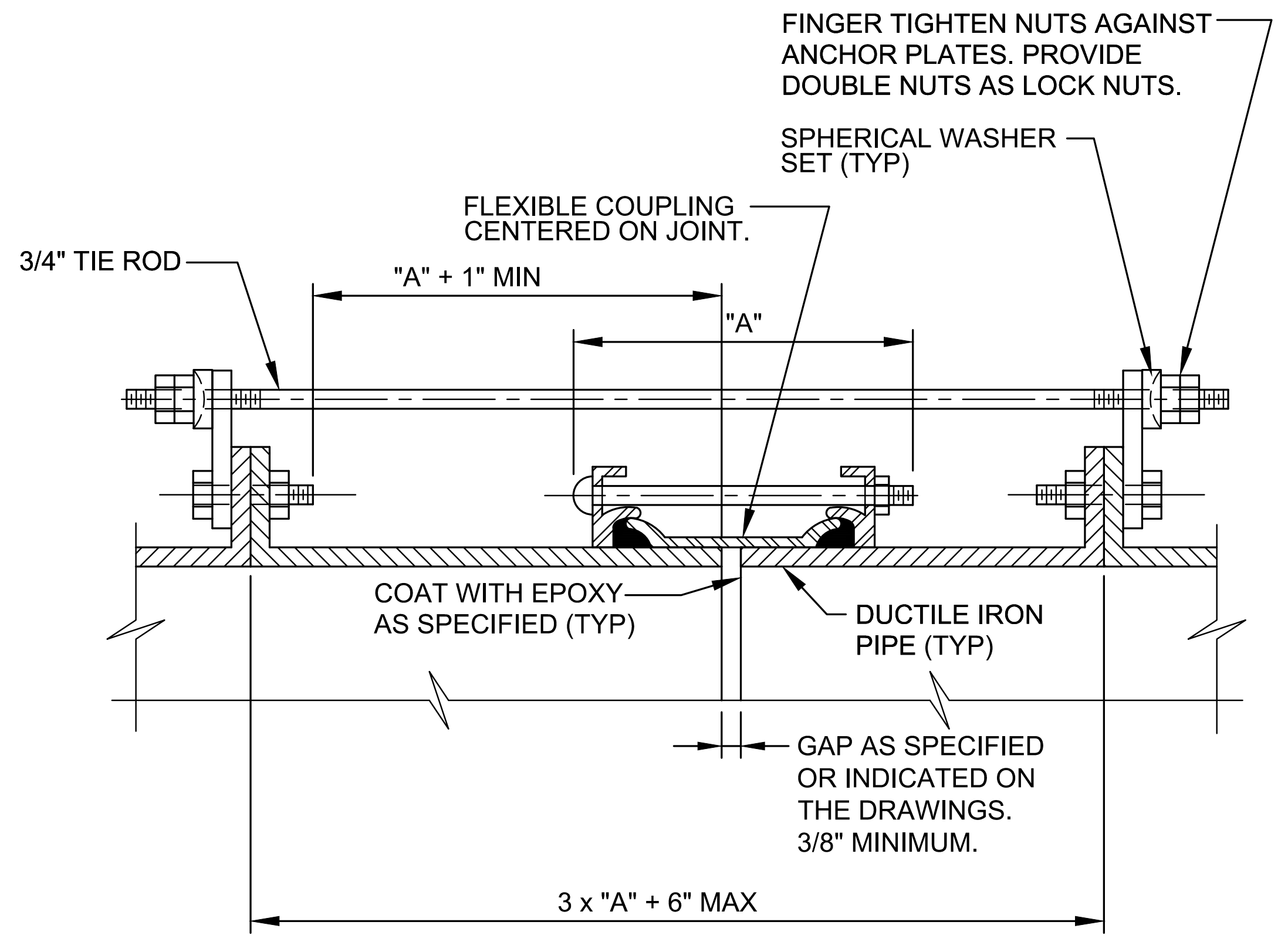

ROD SCHEDULE

PIPE THRUST. SEE NOTE 2.	TYPE OF CONNECTION	NO. OF RODS
0-6,000#	I	2
6,001 - 12,000#	II	2
12,001 - 18,000#	II	3
18,001 - 24,000#	II	4
24,001 - 30,000#	II	5

P110 DIP FLEXIBLE COUPLING TIE DOWN

TYP N SHEET 1 OF 2 04/21/15

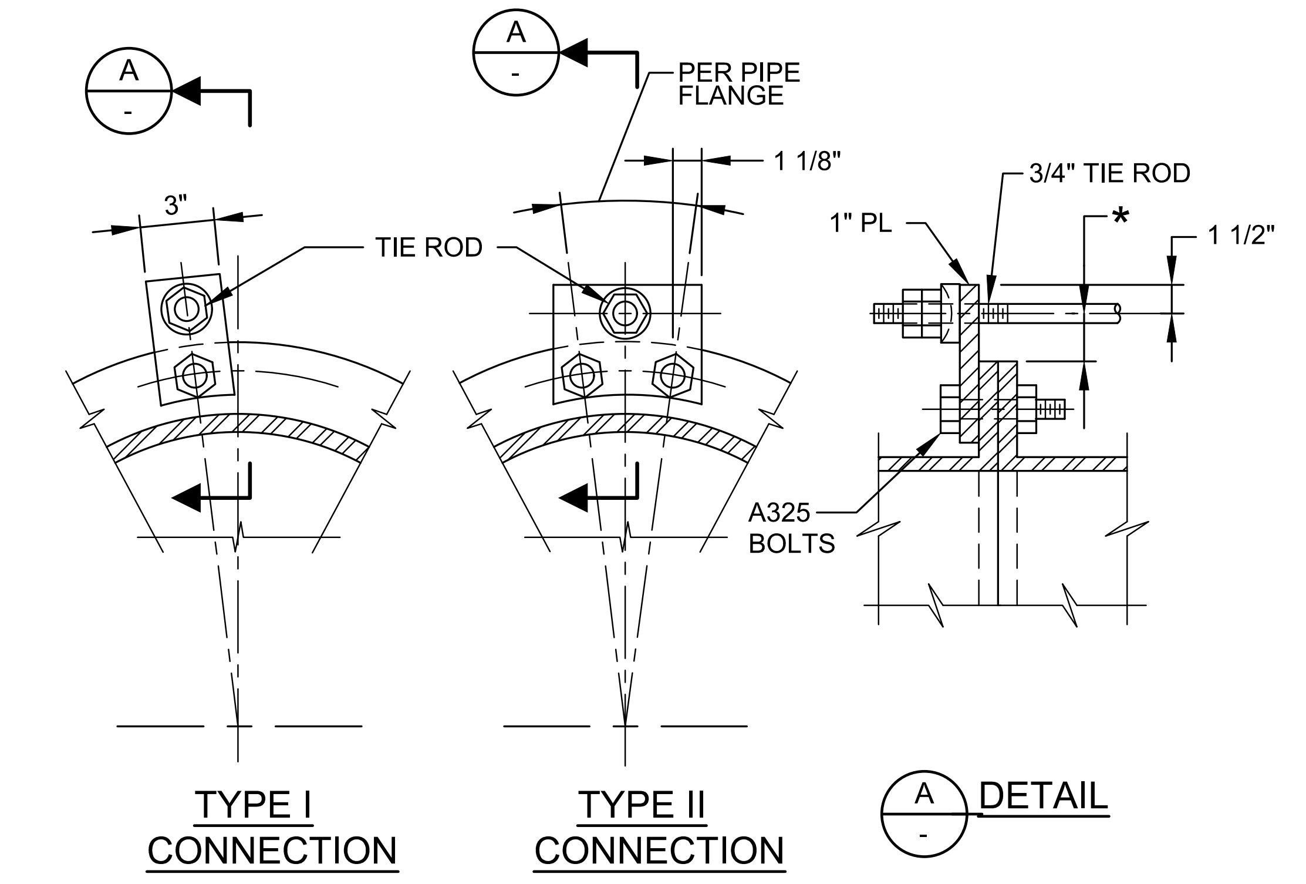

NOTES:

1. ALL EXPOSED FLEXIBLE COUPLINGS SHALL HAVE TIE RODS UNLESS SPECIFICALLY INDICATED OTHERWISE ON THE DRAWINGS.
2. PIPE THRUST SHALL BE BASED ON TEST PRESSURE.
3. PIPE THRUST = 0.7854 x D^2x TEST PRESSURE, WHERE "D" IS PIPE OD.
4. MINIMUM TIE ROD YIELD = 48,000 PSI.
5. FOR THRUSTS GREATER THAN 30,000 POUNDS, ADD ONE 3/4 INCH DIAMETER TIE ROD FOR EVERY 6,000 POUNDS INCREASE IN THRUST.
6. ALL ROD CONNECTIONS SHALL BE TYPE II FOR THRUSTS GREATER THAN 30,000 POUNDS.
7. GRIND ALL CORNERS SMOOTH.
8. ∗= AS REQUIRED TO CLEAR FLEXIBLE COUPLING. 3/4" MINIMUM AND 1 1/2" MAXIMUM.

P110 DIP FLEXIBLE COUPLING TIE DOWN

TYP N SHEET 2 OF 2 04/21/15

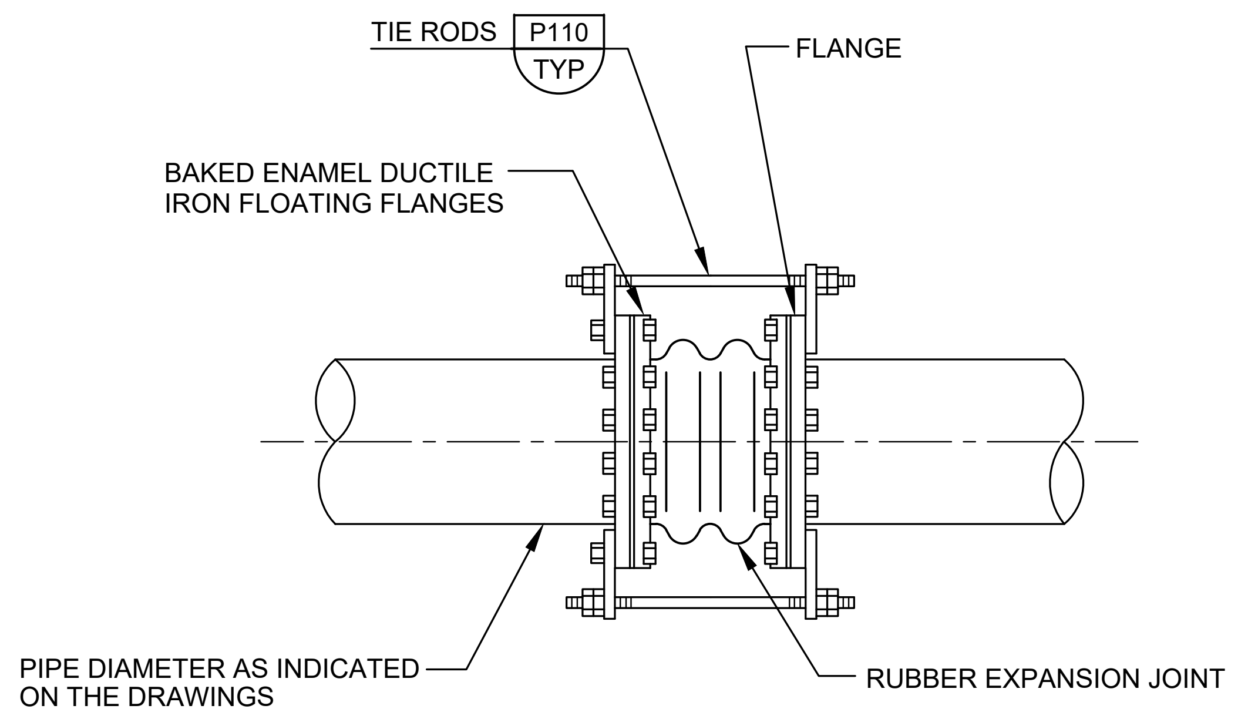

P232 RUBBER EXPANSION JOINTS FOR DIP

TYP N 03/01/10

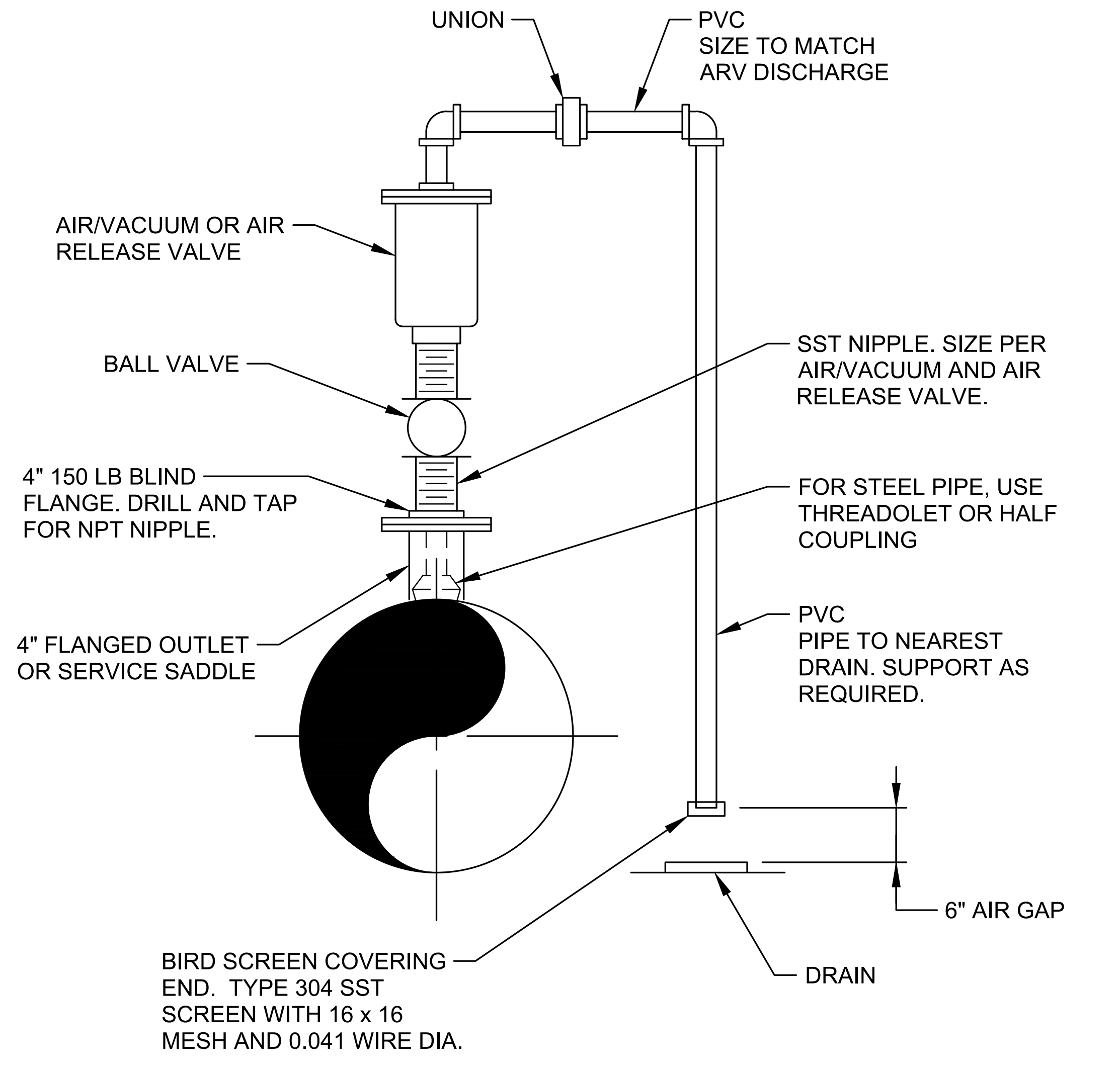

NOTES:

1. VALVE SIZE SHALL BE AS INDICATED ON THE DRAWINGS.
2. SERVICE TAP AND PLUG VALVE SHALL MATCH VALVE INLET SIZE.

P240 AIR VACUUM AND AIR RELEASE FOR 3" AND SMALLER VALVE ASSEMBLY

TYP S 03/01/10

REV	DATE	BY	DESCRIPTION

DESIGNED
HV
DRAWN
AD
CHECKED
DK
DATE
OCTOBER 2019

DWAYNE R. KREIDLER
No 54579

PRINTED COPIES OF THIS DOCUMENT ARE NOT CONSIDERED SIGNED AND SEALED AND THE SIGNATURE MUST BE VERIFIED ON ANY ELECTRONIC COPIES.

POLK COUNTY

carollo®
200 East Robinson Street, Suite1400
Orlando, FL 32801
Phone (407) 478-4642
CA No. 8571

POLK COUNTY UTILITIES
GIBSON OAKS WATER PRODUCTION FACILITY
MECHANICAL
DETAILS I

VERIFY SCALES
BAR IS ONE INCH ON ORIGINAL DRAWING
0 1"
IF NOT ONE INCH ON THIS SHEET, ADJUST SCALES ACCORDINGLY

JOB NO.
9621C.10
DRAWING NO.
00GM01
SHEET NO.
20 OF 24

LAST SAVED BY: ggonzalez

PROJECT NO. FILE NAME: 9621C10_00GM01_LEVEL_II.dwg

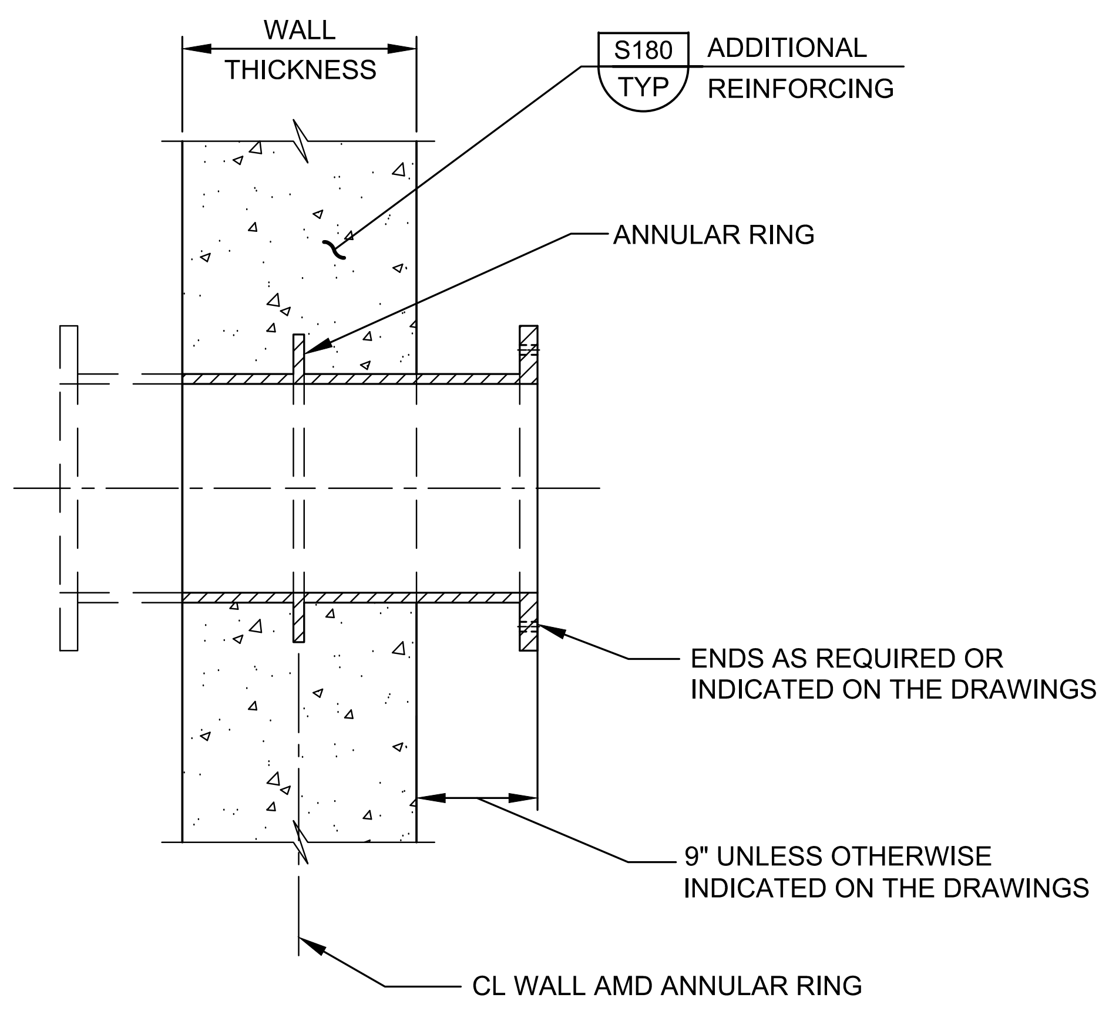

P312 TYP WALL THIMBLE FOR DIP

N 01/30/2015

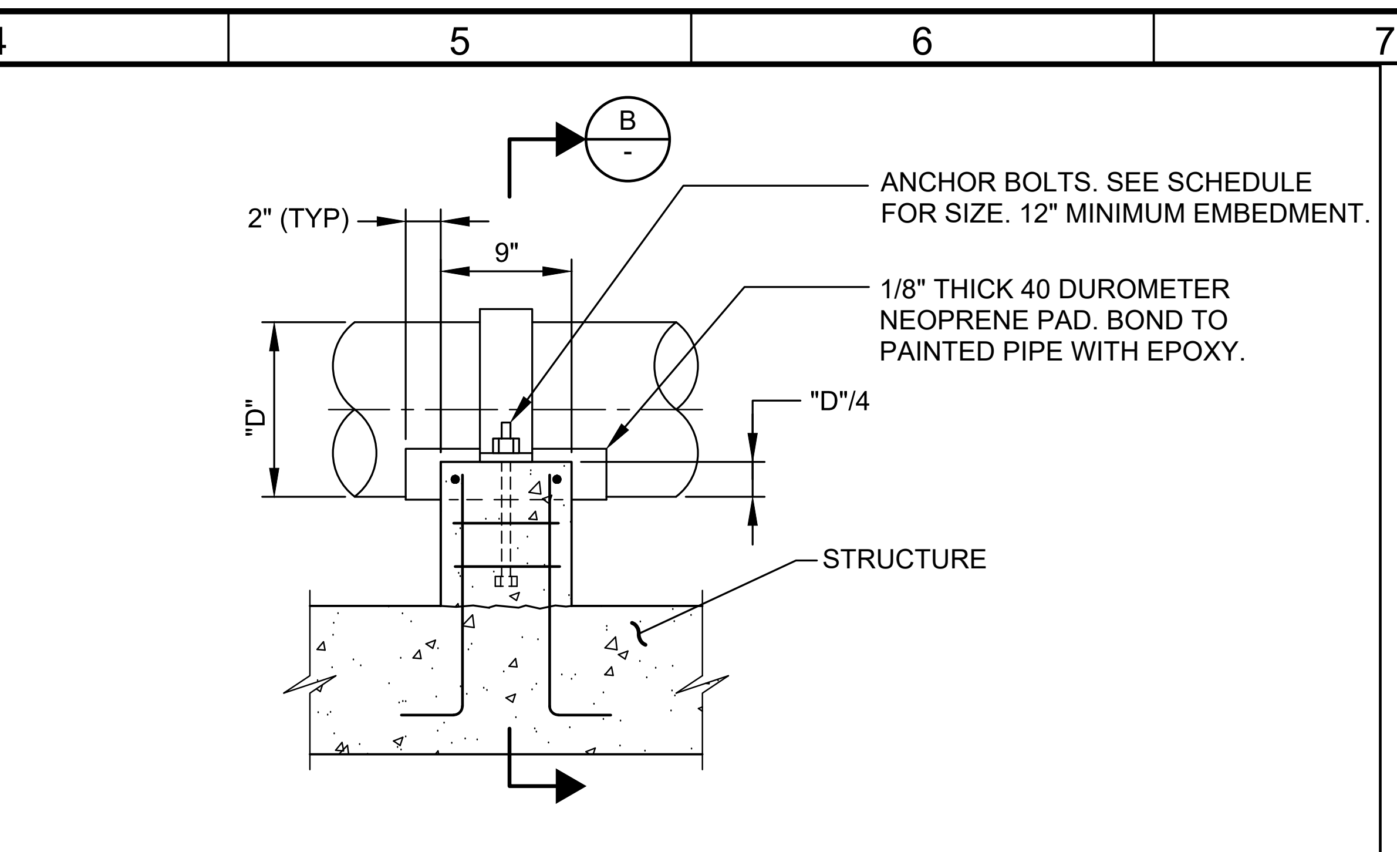

A SECTION-SUPPORT AT STRUCTURE

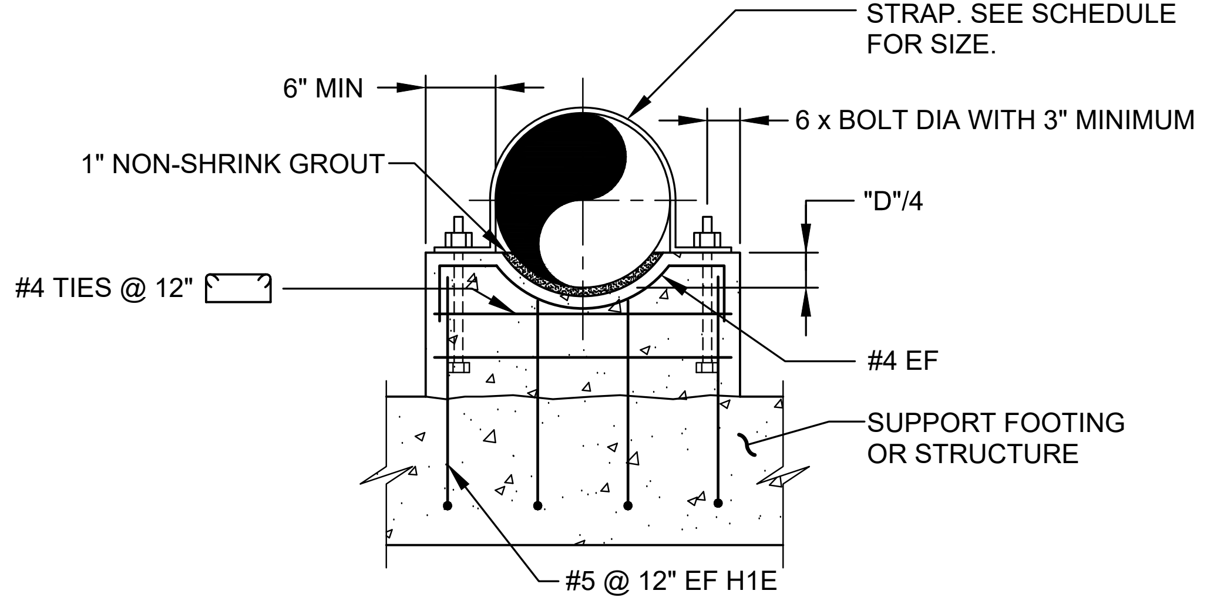

B SECTION

P602 TYP CONCRETE PIPE SUPPORT

N SHEET 1 OF 2 07/19/16

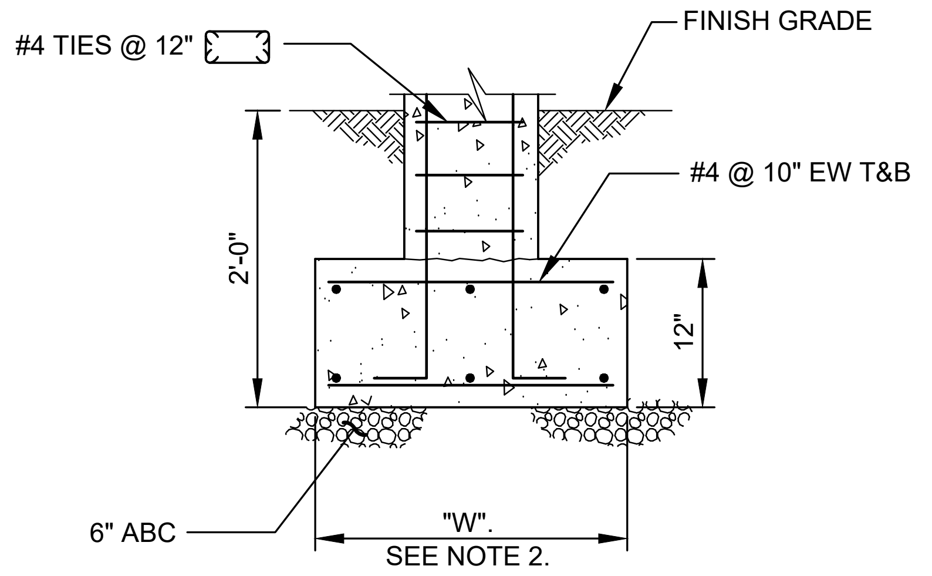

C SECTION-ISOLATED SUPPORT WITH FOOTING

SCHEDULE		
PIPE SIZE	STRAP SIZE	ANCHOR BOLT DIA
8" - 12"	FB 1/4" x 4"	1/2"
14" - 24"	FB 5/16" x 4"	5/8"
26" - 36"	FB 3/8" x 4"	3/4"

NOTES:

1. IF SUPPORT IS SUBMERGED OR LOCATED BELOW THE TOP OF WALL IN WATER BEARING STRUCTURE, MATERIAL FOR ANCHOR BOLTS AND STRAP SHALL BE STAINLESS STEEL. IN ALL OTHER AREAS, THE MATERIAL FOR ANCHOR BOLTS AND STRAP SHALL BE HOT-DIP GALVANIZED STEEL UNLESS OTHERWISE INDICATED ON THE DRAWINGS.
2. THE WIDTH OF THE FOOTING "W" = 2'-6". THE LENGTH OF THE FOOTING = "D" + 2'-0".

P602 TYP CONCRETE PIPE SUPPORT

N SHEET 2 OF 2 11/30/08

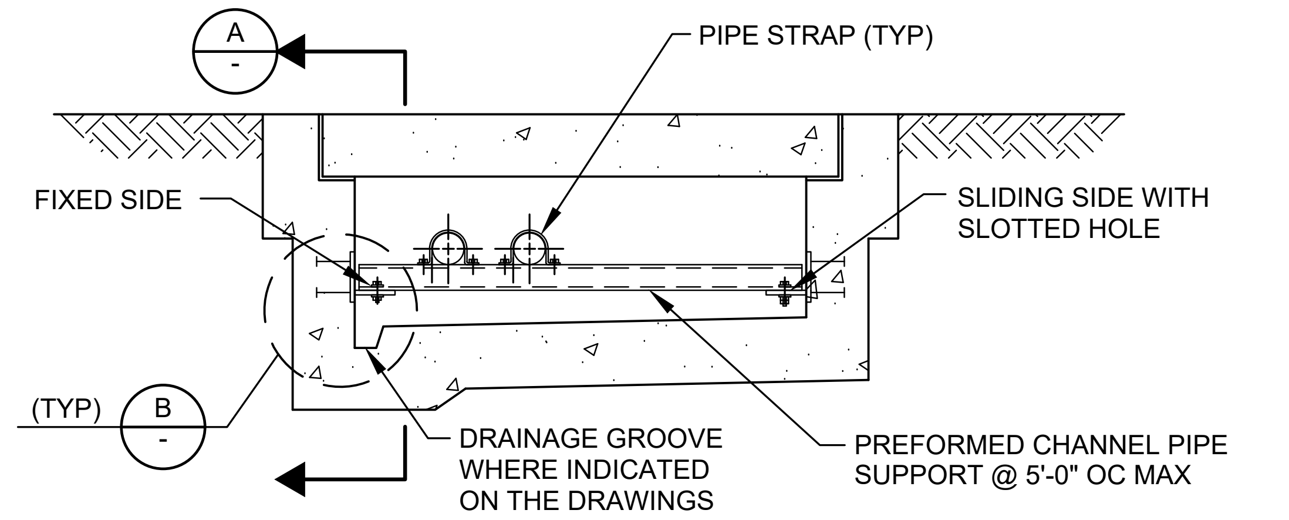

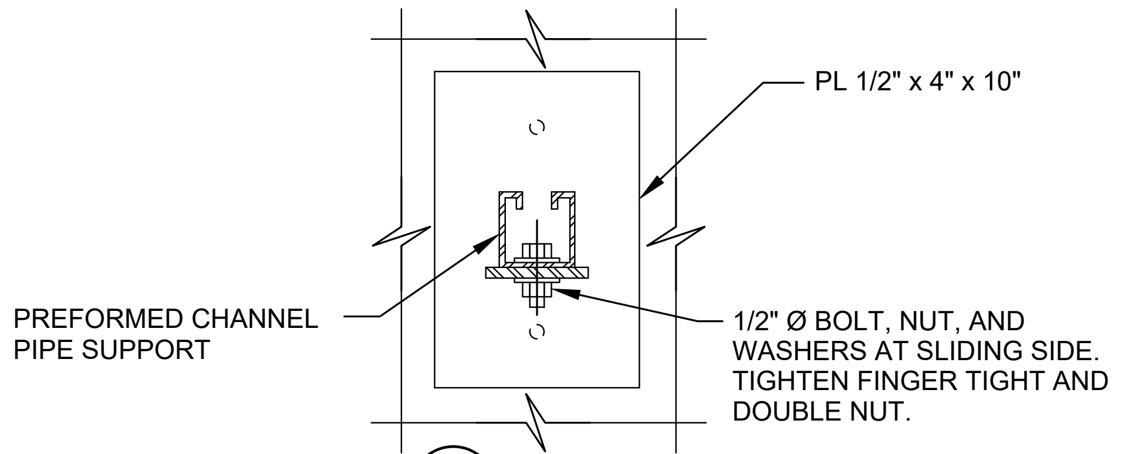

A SECTION

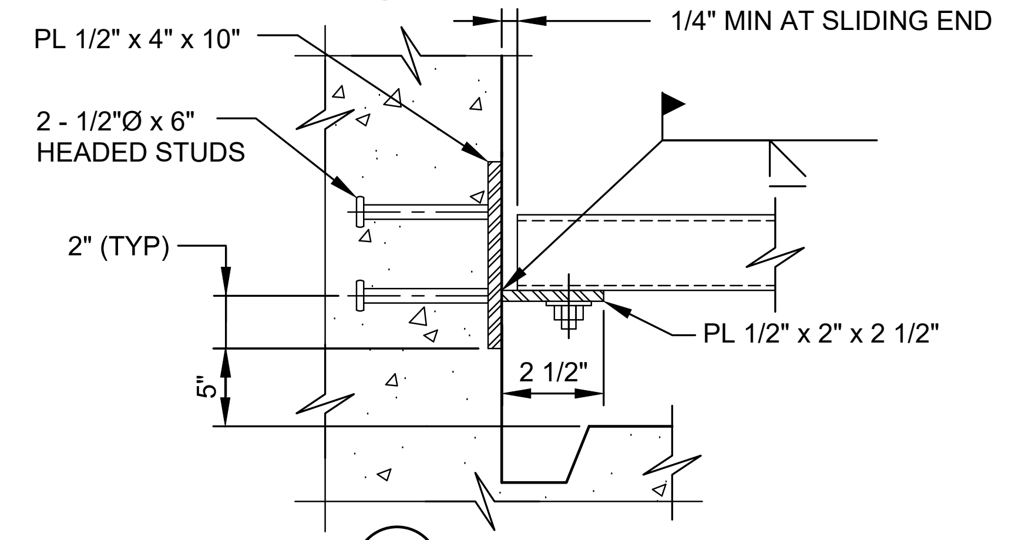

B DETAIL

P613 TYP PREFORMED CHANNEL PIPE SUPPORT IN PIPE OR CONDUIT TRENCH

08/01/05

ADJUSTABLE PIPE SADDLE SUPPORT SCHEDULE (INCHES)					
SIZE OF SUPPORTED PIPE **	PIPE SIZE "A"	PIPE SIZE "B"	"C"	"D"	
				MINIMUM	MAXIMUM
2 1/2 *	2 1/2	1 1/2	12	8	13
3	2 1/2	1 1/2	12	8 1/2	13 1/2
3 1/2	2 1/2	1 1/2	12	8 1/2	13 1/2
4	3	2 1/2	12	9 1/2	14
6	3	2 1/2	12	10 1/2	15 1/2
8	3	2 1/2	12	11 1/2	16 1/2
10	3	2 1/2	12	13 1/2	18 1/2
12	3	2 1/2	12	15	19 1/2
14	4	3	12	16 1/2	20 1/2
16	4	3	12	17 1/2	22 1/2
18	6	3 1/2	14	19 1/2	24
20	6	3 1/2	14	21	25 1/2
24	6	4	14	23 1/2	28 1/2
30	6	4	14	27	31 1/2
32	6	4	14	28 1/2	32 1/2
36	6	4	14	30 1/2	34 1/2

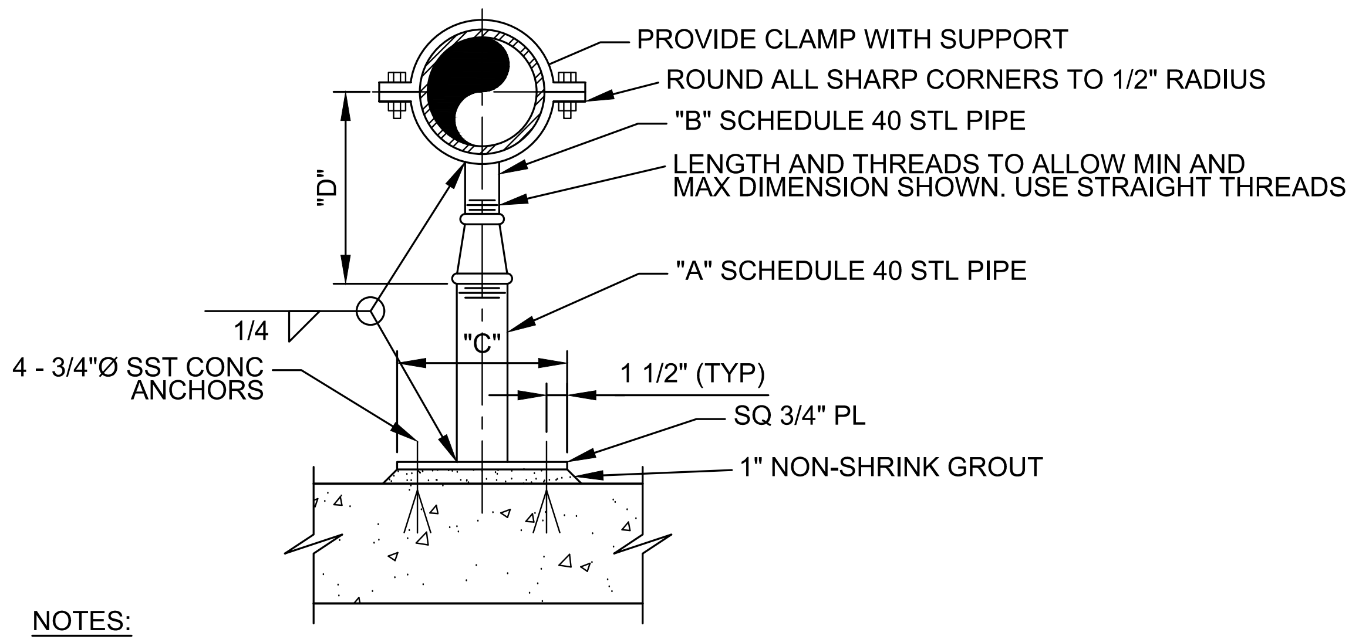

NOTES:

1. HOT-DIP GALVANIZED SUPPORT AFTER FABRICATION.
2. * = USE 2 1/2" SUPPORTS FOR PIPES LESS THEN 2 1/2"Ø.
3. ** = NOMINAL PIPE SIZE.

P624 TYP ADJUSTIBLE PIPE SUPPORT

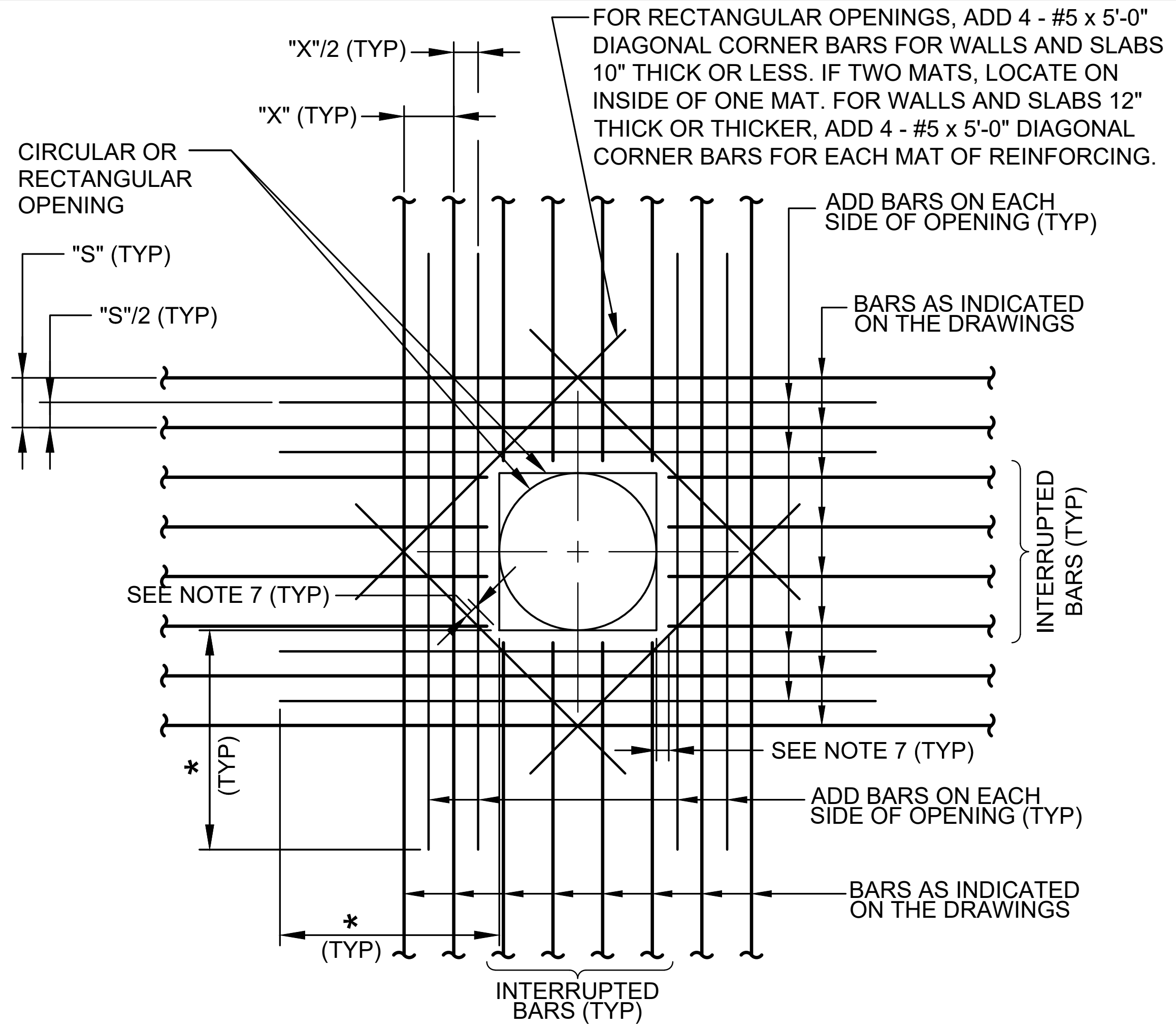

NOTES:

1. ADD BARS SHALL BE SAME SIZE AS PARALLEL BARS BEING CUT.
2. AREA OF ADD BARS AT EACH EDGE OF OPENING IN EACH DIRECTION SHALL BE EQUAL TO OR GREATER THAN 1/2 THE CROSS SECTIONAL AREA OF THE INTERRUPTED BARS.
3. PROVIDE STANDARD ACI HOOKS ON BARS IF STRAIGHT EXTENSION PAST THE OPENING, CANNOT BE ACHIEVED.
4. PLACE ADD BARS IN SAME PLANES AS INTERRUPTED REINFORCING.
5. PLACE #5 DIAGONAL BARS ON INSIDE MAT OF REINFORCING.
6. * = DIMENSION EQUALS OPENING DIMENSION MEASURED PERPENDICULAR TO ADD BARS PLUS LAP SPLICE LENGTH.
7. 2" CLEAR TO CONCRETE OPENINGS OR OUTSIDE FACE OF PIPES AND PIPE SLEEVES. DO NOT OVERCUT REINFORCMENT FOR EASIER PLACEMENT OF WEEP RINGS AND FLANGES.

S180 TYP ADDITIONAL REINFORCING AT OPENINGS IN CONCRETE SLABS OR WALLS

NS 07/11/13

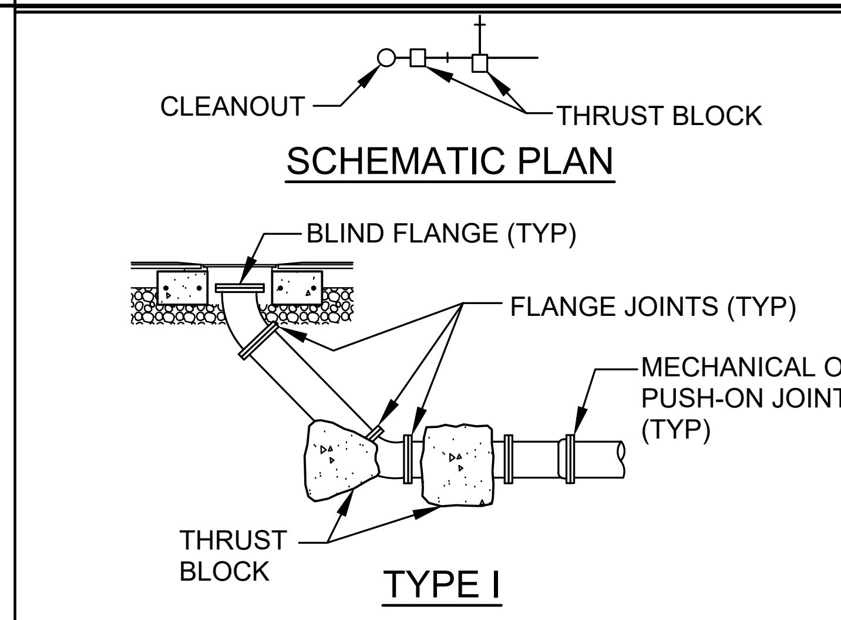

TYPE I

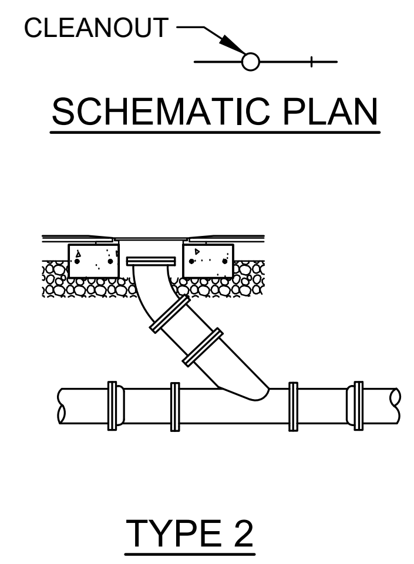

TYPE 2

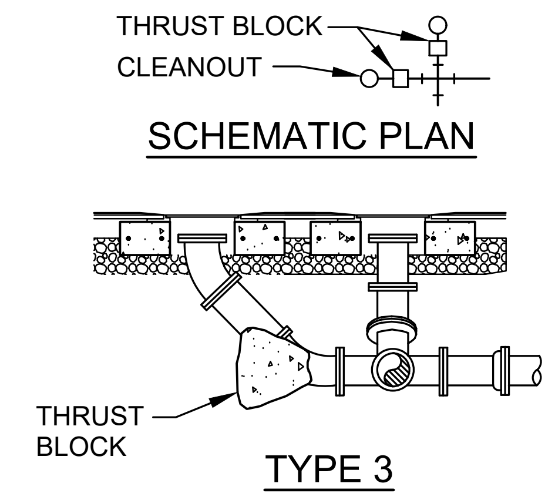

TYPE 3

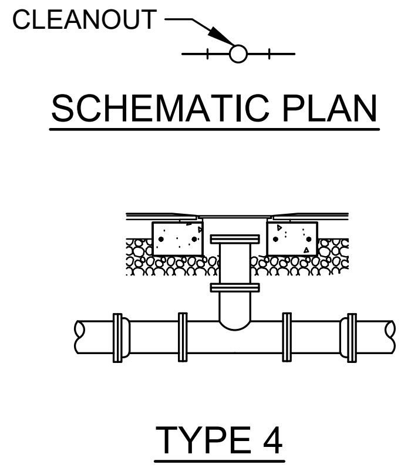

TYPE 4

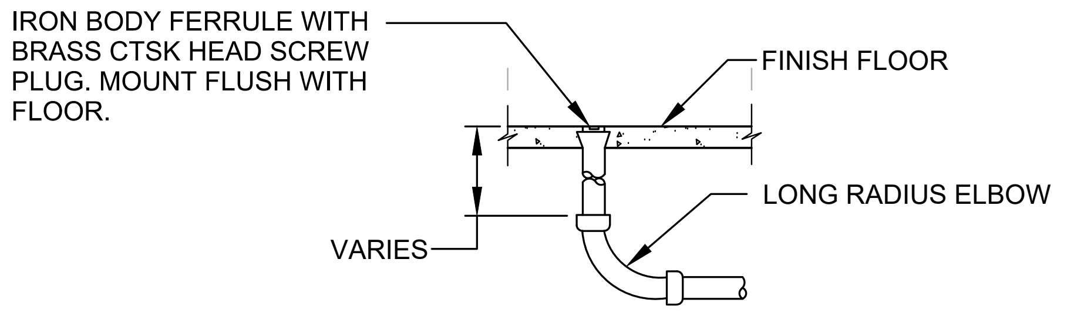

TYPE 5

P004 TYP CLEANOUTS

S SHEET 1 OF 2 07/31/08

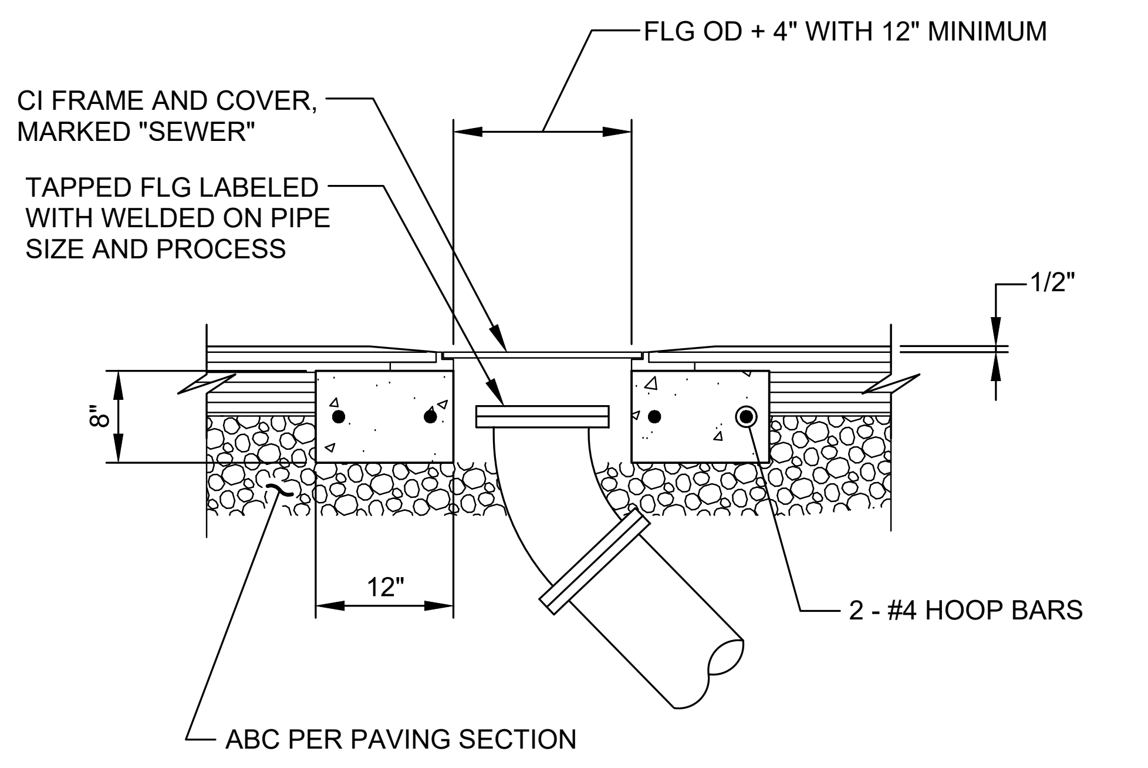

TERMINATION IN PAVEMENT
ALL TYPES FOR 4"Ø TO 12"Ø

NOTES:

1. ALL THRUST BLOCKS SHALL BE PLACED PER P102 TYP .
2. CONCRETE RING SHALL BE PLACED AFTER PAVEMENT PLACEMENT.
3. ALL FLANGES CAST IN CONCRETE SHALL BE TAPPED TO ALLOW THE INSTALLATION OF BLIND FLANGES WITH BOLTS.
4. CLEANOUT PIPE SHALL BE SAME SIZE AS LINE PIPE.
5. FOR CLEANOUTS IN YARD AREA, PLACE 12" SQUARE BY 4" THICK CONCRETE PAD.

P004 TYP CLEANOUTS

S SHEET 2 OF 2 07/31/08

REV	DATE	BY	DESCRIPTION

DESIGNED HV
DRAWN AG
CHECKED DK
DATE OCTOBER 2019

DWAYNE R. KREIDLER
LICENSE No 54579
STATE OF FLORIDA
PROFESSIONAL ENGINEER

PRINTED COPIES OF THIS DOCUMENT ARE NOT CONSIDERED SIGNED AND SEALED AND THE SIGNATURE MUST BE VERIFIED ON ANY ELECTRONIC COPIES.

POLK COUNTY

carollo®
200 East Robinson Street, Suite1400
Orlando, FL 32801
Phone (407) 478-4642
CA No. 8571

POLK COUNTY UTILITIES
GIBSON OAKS WATER PRODUCTION FACILITY
MECHANICAL
DETAILS II

VERIFY SCALES
BAR IS ONE INCH ON ORIGINAL DRAWING
0 1"
IF NOT ONE INCH ON THIS SHEET, ADJUST SCALES ACCORDINGLY

JOB NO. 9621C.10
DRAWING NO. 00GM02
SHEET NO. 21 OF 24

$$$$DATES$$$$
$$$$USER$$$$
$$$$PLOT_INFO$$$$
LAST SAVED BY: ggonzalez

PROJECT NO.
FILE NAME: 9621C10_00GM02_LEVEL_II.dwg

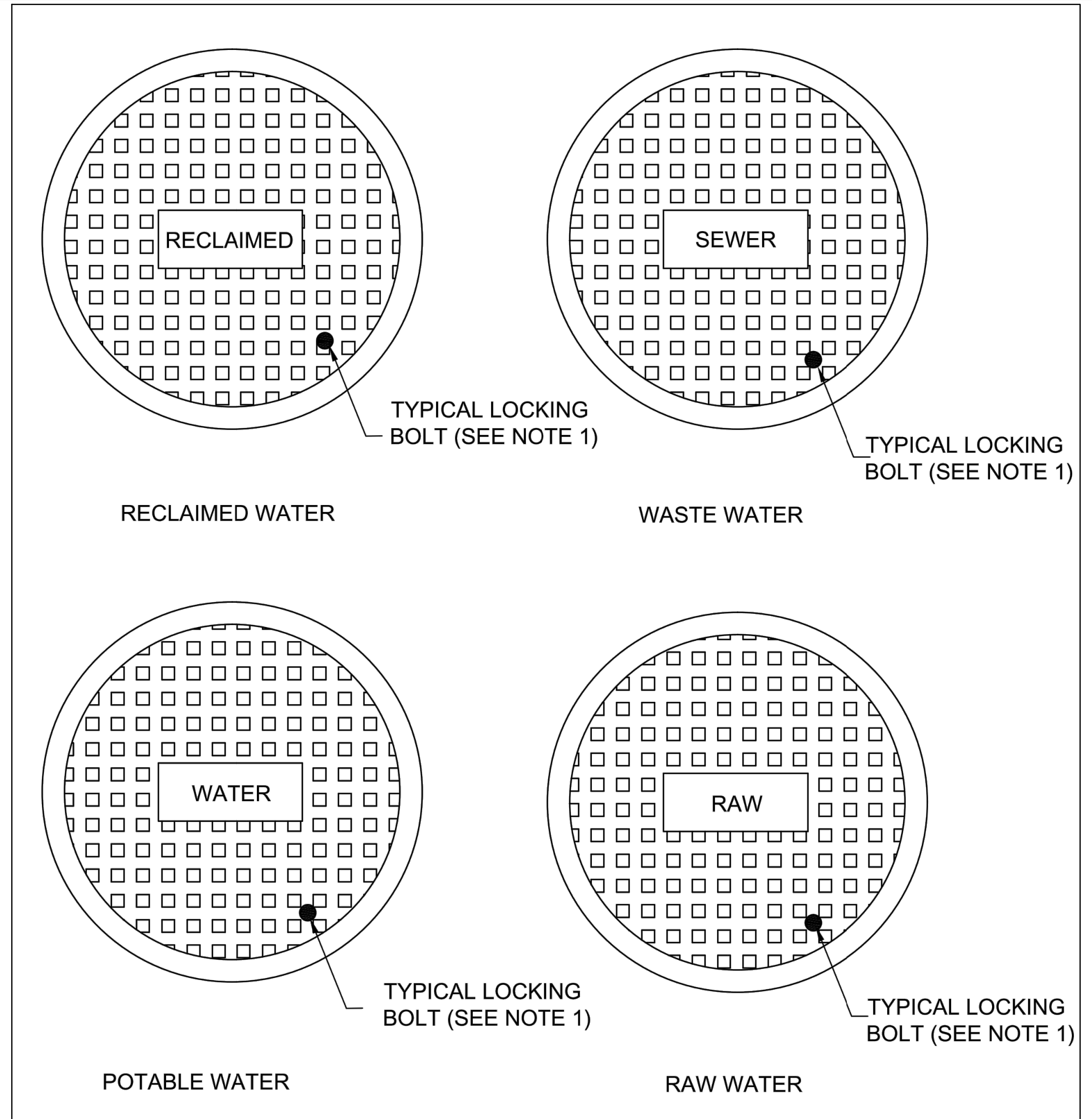

NOTE:
1. LOCKING LIDS ARE REQUIRED ON ALL VALVE BOXES LOCATED IN ROADWAYS WITH SPEED LIMITS ABOVE 30 MPH OR ON MAINS THAT ARE 16 INCHES IN DIAMETER OR LARGER.

TYPICAL VALVE BOX COVER | **FIGURE GR-10**
POLK COUNTY UTILITIES, FLORIDA | **DECEMBER, 2010**

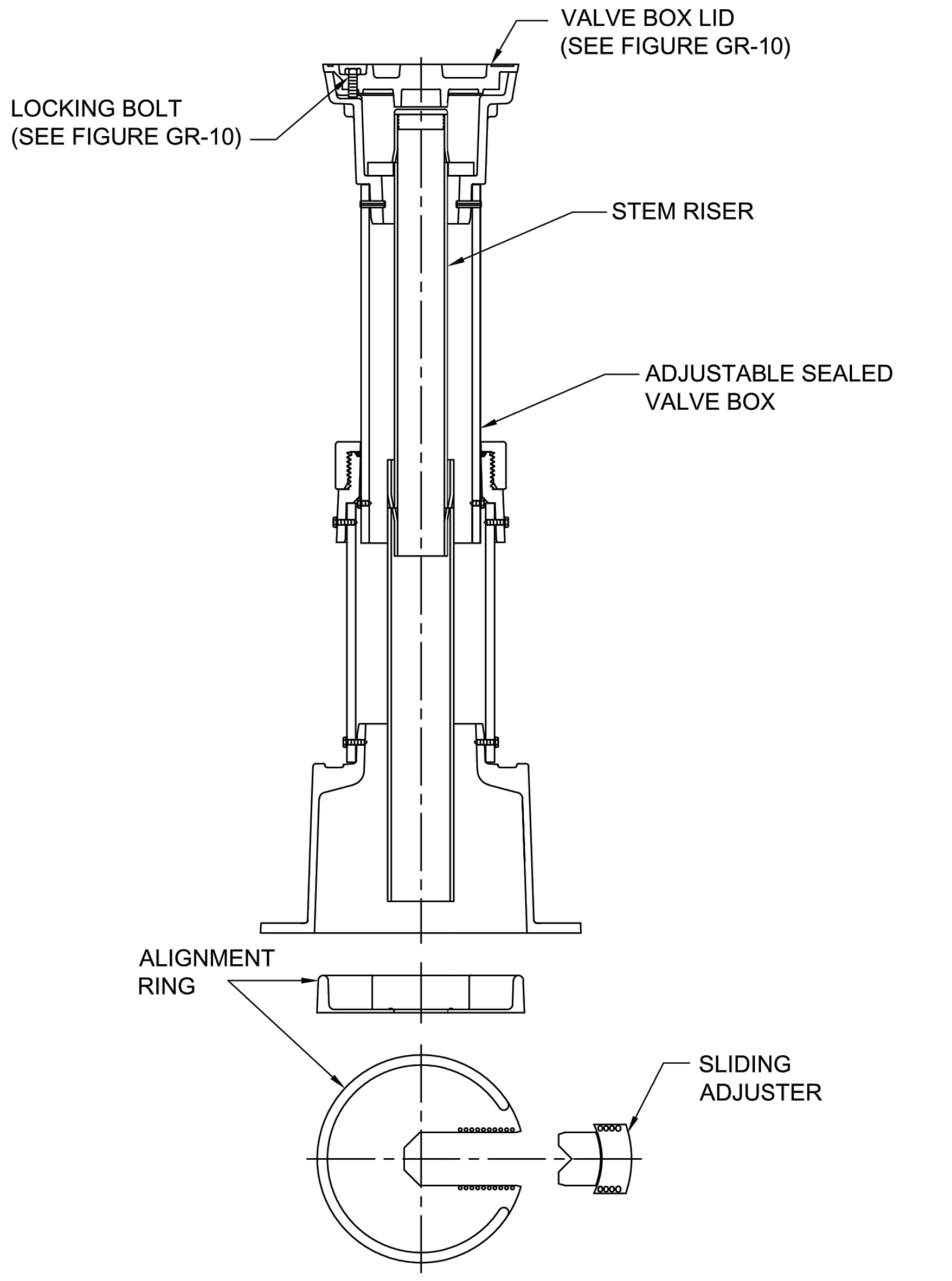

NOTES:
1. REQUIRED ON ALL MAINS WHENEVER THE TOP OF THE VALVE NUT IS 6 FEET OR DEEPER BELOW THE FINISHED SURFACE ELEVATION THAT IS DIRECTLY ABOVE THE VALVE LOCATION.

VALVE BOX ASSEMBLY (DEEP) | **FIGURE GR-11**
POLK COUNTY UTILITIES, FLORIDA | **DECEMBER, 2010**

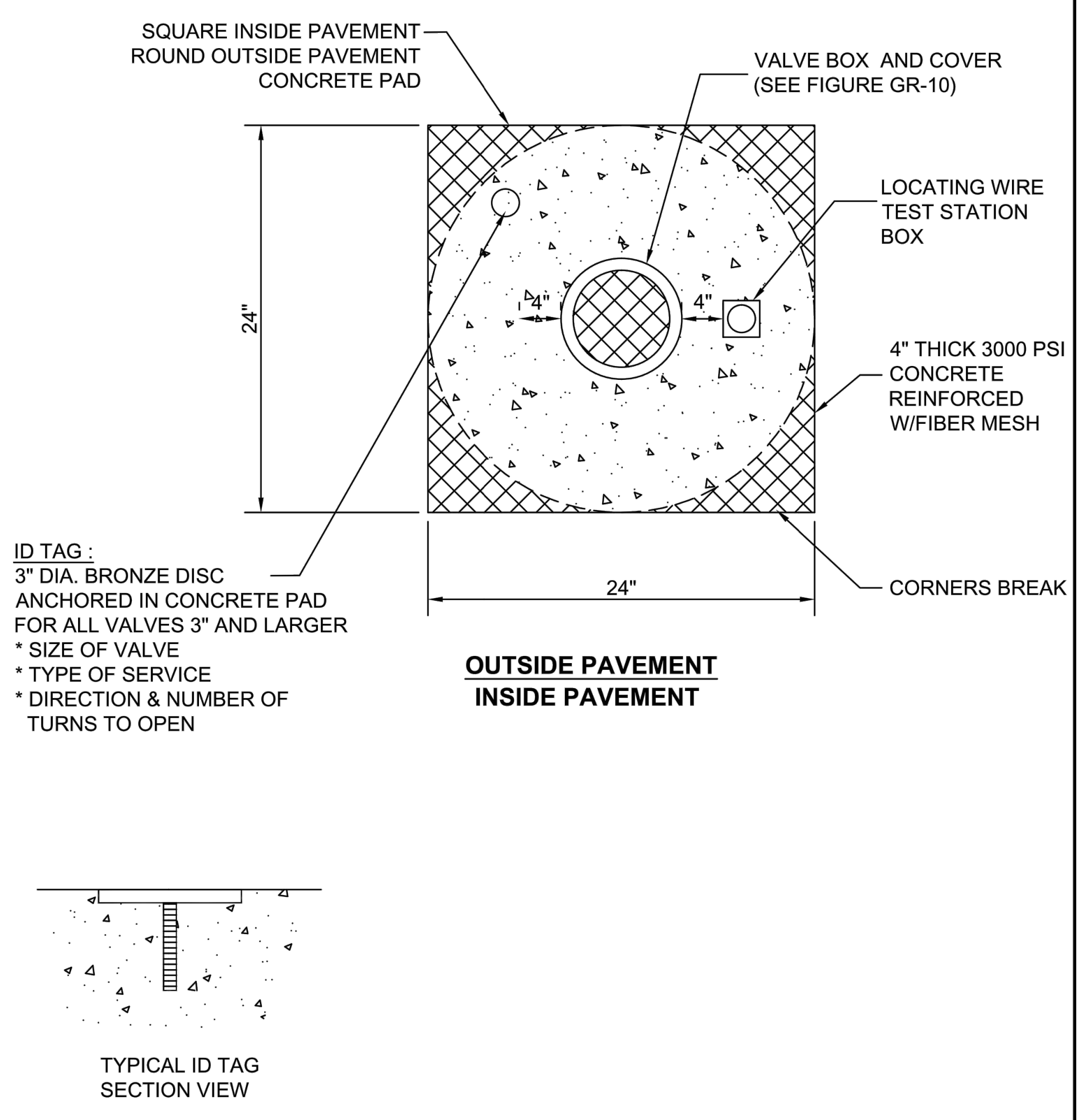

NOTES:
1. BRASS IDENTIFICATION DISC AND VALVE COLLAR SHALL BE REQUIRED FOR ALL VALVES LOCATED OUTSIDE OF PAVEMENT.

VALVE COLLAR | **FIGURE GR-12**
POLK COUNTY UTILITIES, FLORIDA | **APRIL, 2017**

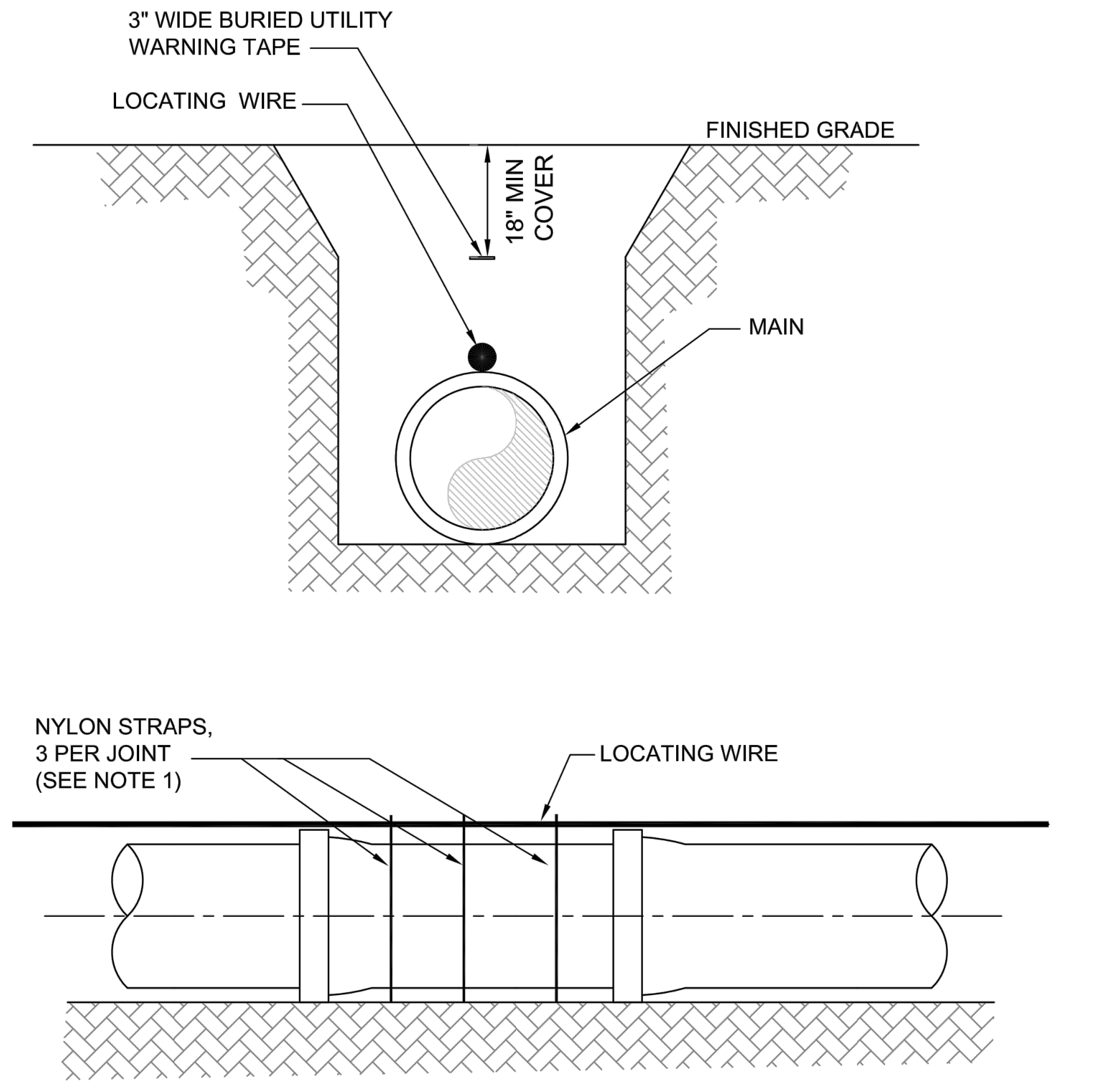

NOTES:
1. ALL PIPE SHALL REQUIRE INSULATED LOCATING WIRE (14 GAUGE SINGLE STRAND COPPER) CAPABLE OF DETECTION BY A CABLE LOCATOR AND SHALL BE SECURED TO THE TOP AND ON THE CENTERLINE OF THE PIPE WITH NYLON STRAPS THAT ARE SLIPPED ON THE PIPE PRIOR TO THE INSTALLATION OF EACH PIPE SECTION, AND TIGHTENED OVER THE WIRE AFTER INSTALLATION.
2. LOCATING WIRE SHALL TERMINATE AS INDICATED BY FIGURES GR-07 AND GR-12.
3. ALL CONNECTIONS SHALL BE MADE USING WATER-PROOF CONNECTORS.

PIPE LOCATING WIRE | **FIGURE GR-14-1**
POLK COUNTY UTILITIES, FLORIDA | **SEPTEMBER, 2014**

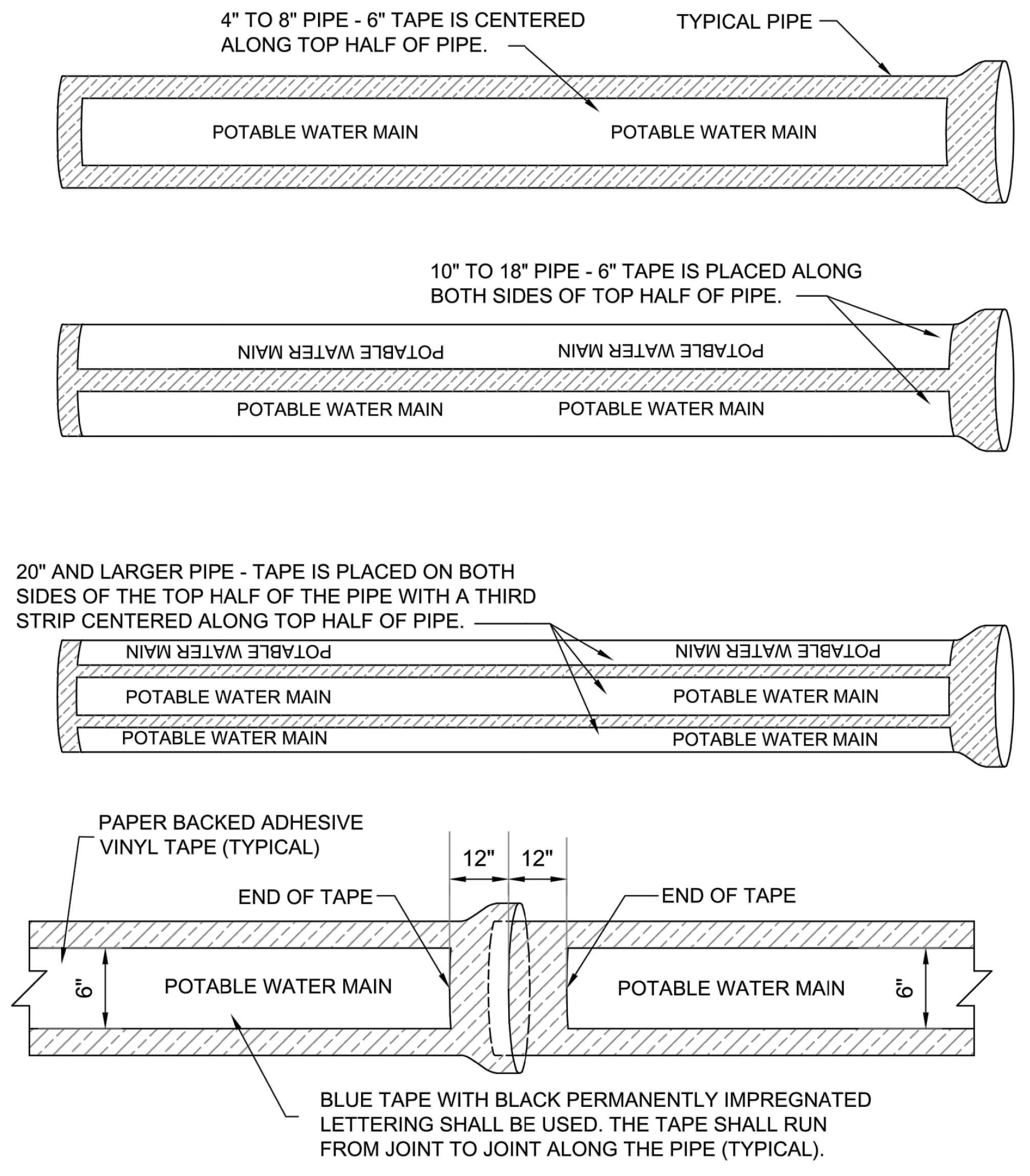

DUCTILE IRON PIPE POTABLE WATER MAIN WITH IDENTIFICATION TAPE
NTS

PVC PIPE COLOR : BLUE

PIPE IDENTIFICATION POTABLE WATER MAINS | **FIGURE GR-14-2**
POLK COUNTY UTILITIES, FLORIDA | **DECEMBER, 2010**

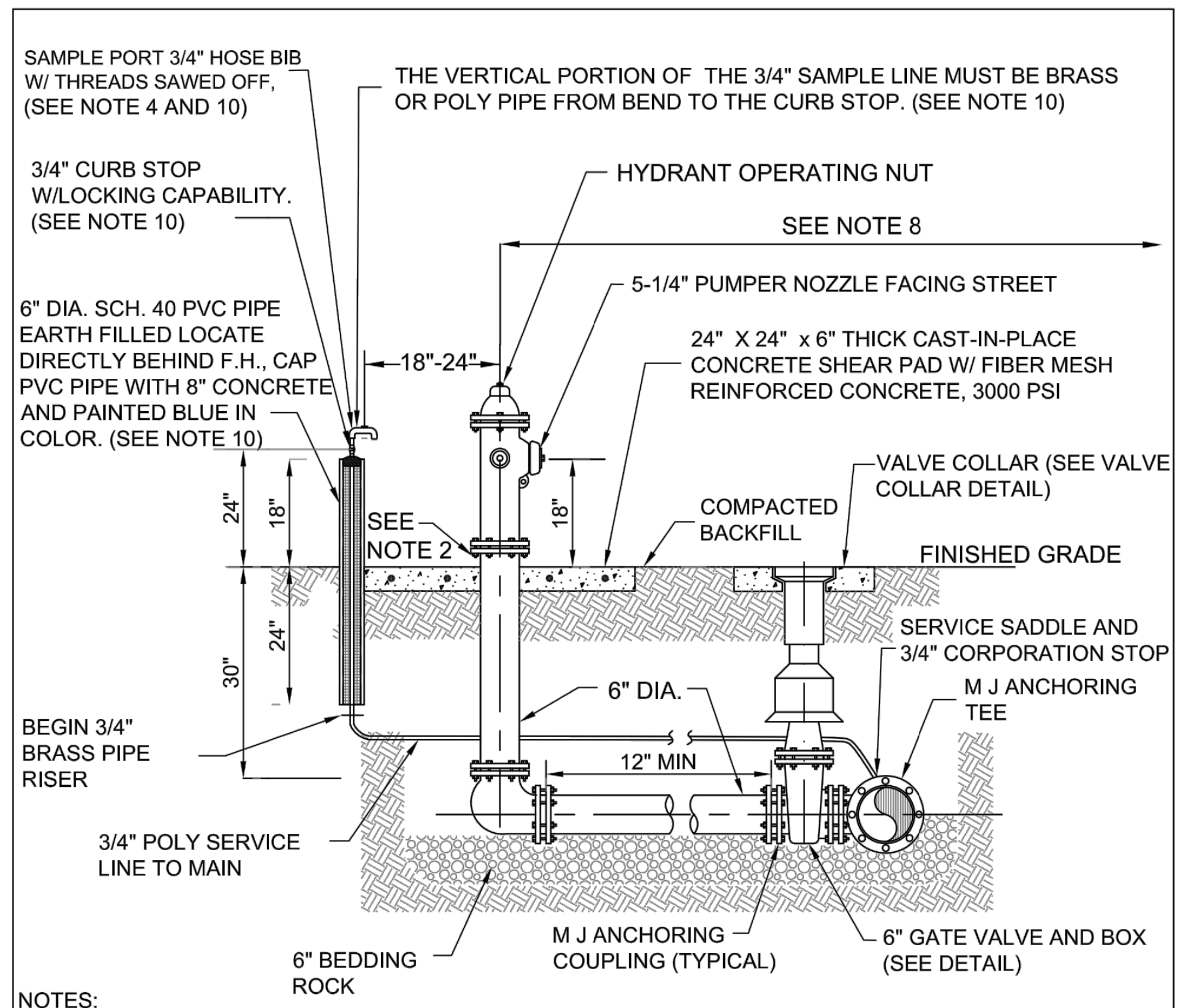

NOTES:
1. FIRE HYDRANT SHALL BE SUPPLIED WITHOUT A WEEP HOLE (DRY BARREL TYPE) UNLESS OTHERWISE APPROVED BY PCU.
2. CLEARANCE BETWEEN BOTTOM OF BOLTS AND TOP OF SHEAR PAD SHALL BE 6".
3. RESTRAINED JOINTS OR ALL-THREAD ROD REQUIRED TO SECURE PIPE, RISER AND VALVE IN THE FIRE HYDRANT ASSEMBLY TO THE MAIN.
4. TOP OF SAMPLE PORT TO BE LOWER THAN FLANGE ON FIRE HYDRANT BONNET.
5. HYDRANT SHALL BE PAINTED 1 COAT THEMEC 69-HIBUILD EPOXOLINE II (4-6DFT) AND ONE COAT 73-COLOR ENDURA SHIELD (3-5DFT); COLOR INTERNATIONAL ORANGE
6. VALVE COLLAR AND HYDRANT SHEAR PAD MAY BE INCORPORATED INTO ONE 6" THICK PAD.
7. THRUST BLOCKS MAY ONLY BE USED WHEN CONNECTION IS TO AN EXISTING WATER MAIN AND IT IS NOT KNOWN IF THERE ARE RESTRAINED JOINTS BOTH WAYS FROM THE CONNECTION.
8. HYDRANT SHALL BE MIN OF 2' FROM EDGE OF SIDEWALK, 5' MIN FROM BACK OF MIAMI CURB AND 10' MIN FROM EDGE OF DRIVEWAY OR TURNOUT.
9. A BLUE REFLECTIVE PAVEMENT MARKER (RPM) SHALL BE INSTALLED 6 INCHES TO THE SIDE OF THE LANE STRIPE WHICH IS CLOSEST TO THE HYDRANT AND IN LINE WITH THE LARGEST PORT.
10. A PRE-MANUFACTURED ONE PIECE SAMPLE STATION MAY BE SUBSTITUTED FOR THE FIELD CONSTRUCTED SAMPLING STATION IN ACCORDANCE WITH THE APPROVED MATERIAL CHECKLIST.

FIRE HYDRANT ASSEMBLY | **FIGURE WA-03**
POLK COUNTY UTILITIES, FLORIDA | **JULY, 2018**

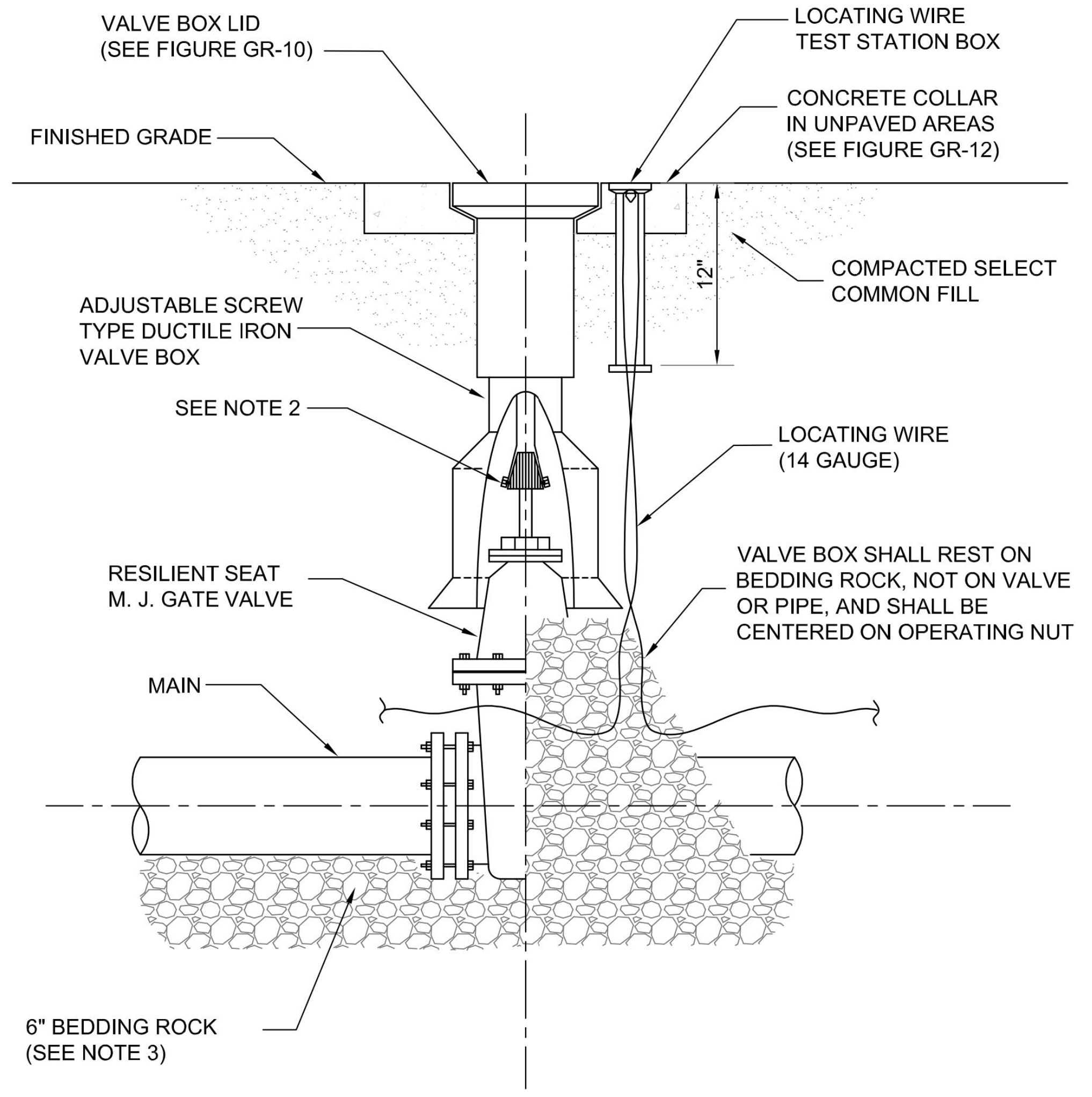

NOTES:
1. PVC PIPE OR DUCTILE IRON PIPE EXTENSIONS SHALL NOT BE USED ON VALVE BOX INSTALLATION IN PAVED AREAS.
2. THE VALVE ACTUATING NUT SHALL BE EXTENDED TO BE WITHIN 3' OF FINISHED GRADE.
3. BEDDING MATERIAL SHALL CONFORM TO FDOT NO. 57 AGGREGATE.
4. WIRE SHALL TERMINATE AT THE TOP OF THE TEST STATION BOX WITH 12" OF COILED EXCESS LENGTH.
5. REFER TO FIGURE GR-11 FOR INSTALLATIONS AT A DEPTH OF 6' OR GREATER.

GATE VALVE AND BOX (SHALLOW) | **FIGURE GR-07**
POLK COUNTY UTILITIES, FLORIDA | **SEPTEMBER, 2014**

REV	DATE	BY	DESCRIPTION

DESIGNED
HV
DRAWN
AG
CHECKED
DK
DATE
OCTOBER 2019

DWAYNE R. KREIDLER
No 54579

PRINTED COPIES OF THIS DOCUMENT ARE NOT CONSIDERED SIGNED AND SEALED AND THE SIGNATURE MUST BE VERIFIED ON ANY ELECTRONIC COPIES.

POLK COUNTY

carollo®
200 East Robinson Street, Suite1400
Orlando, FL 32801
Phone (407) 478-4642
CA No. 8571

POLK COUNTY UTILITIES
GIBSON OAKS WATER PRODUCTION FACILITY
MECHANICAL
DETAILS III

VERIFY SCALES
BAR IS ONE INCH ON ORIGINAL DRAWING
0 1"
IF NOT ONE INCH ON THIS SHEET, ADJUST SCALES ACCORDINGLY

JOB NO.
9621C.10
DRAWING NO.
00GM03
SHEET NO.
22 OF 24

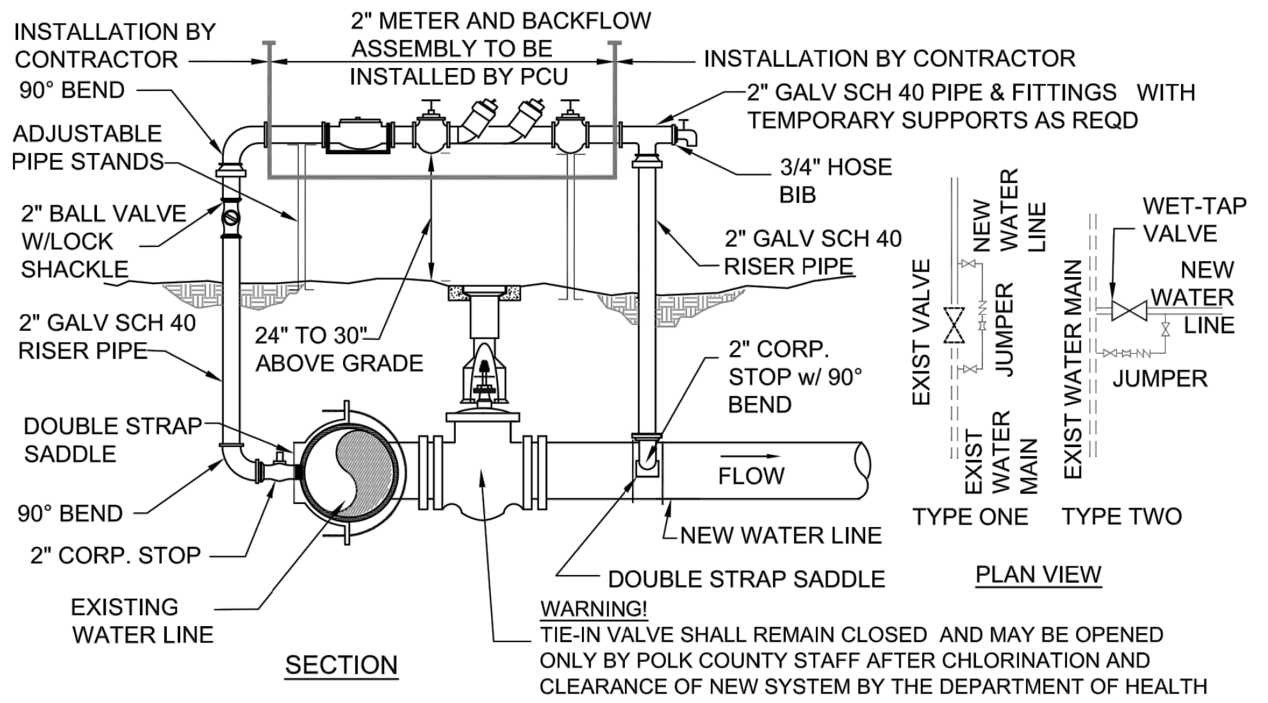

WARNING!
TIE-IN VALVE SHALL REMAIN CLOSED AND MAY BE OPENED ONLY BY POLK COUNTY STAFF AFTER CHLORINATION AND CLEARANCE OF NEW SYSTEM BY THE DEPARTMENT OF HEALTH

1. THE ENTIRE JUMPER ASSEMBLY EXCEPT AS NOTED ABOVE SHALL BE INSTALLED BY THE CONTRACTOR.
2. THIS JUMPER CONNECTION IS REQUIRED AT THE PRIMARY POINT OF CONNECTION TO ACTIVE POTABLE WATER MAINS. THE METER, BACKFLOW PREVENTER AND ALL PIPE AND FITTINGS USED FOR THE JUMPER CONNECTION SHALL BE DISINFECTED PRIOR TO INSTALLATION IN ACCORDANCE WITH AWWA C651, LATEST EDITION.
3. THE JUMPER CONNECTION SHALL BE USED TO FILL AND FLUSH THE NEW WATER MAIN AND TO PROVIDE WATER FOR TESTING AND BACTERIOLOGICAL SAMPLING OF THE NEW MAIN AS REQUIRED.
4. FLUSHING OF NEW WATER MAINS MAY BE DONE VIA THE TIE-IN VALVE ONLY UNDER THE FOLLOWING CONTROLLED CONDITIONS.
   A. THE TIE-IN VALVES SHALL BE OPERATED AND PRESSURE TESTED IN THE PRESENCE OF PCU STAFF IN ORDER TO VERIFY WATER TIGHTNESS PRIOR TO TIE-IN. VALVES WHICH ARE NOT WATERTIGHT SHALL BE REPLACED OR A NEW VALVE INSTALLED IMMEDIATELY ADJACENT TO THE LEAKING VALVE.
   B. THE TIE-IN VALVE SHALL BE OPENED ONLY FOR FLUSHING AND CLEANING OF NEW MAINS. THE FLUSHING SHALL BE DONE IN THE PRESENCE OF PCU STAFF.
5. THE JUMPER CONNECTION SHALL REMAIN OPEN TO MAINTAIN MINIMUM PRESSURE (20psi) IN NEW MAINS AFTER DISINFECTION BUT PRIOR TO HEALTH DEPT CLEARANCE LETTER BEING ISSUED.
6. THE JUMPER CONNECTION MAY NOT BE REMOVED UNTIL FLUSHING, TESTING, AND DISINFECTION OF NEW WATER MAINS IS COMPLETED AND THE SYSTEM CLEARANCE LETTER IS OBTAINED FROM THE POLK COUNTY HEALTH DEPARTMENT.
7. ADEQUATE SUPPORTS, BRACING AND/OR RESTRAINTS SHALL BE PROVIDED AS NEEDED TO RESIST PRESSURE FORCES AND SUPPORT THE ASSEMBLY.
8. THE JUMPER CONNECTION SHALL BE PROTECTED FROM DAMAGE BY INSTALLATION OF A PROTECTIVE WARNING FENCE OR SIMILAR BARRICADE, WHICH SHALL BE ERECTED AND MAINTAINED BY THE CONTRACTOR.
9. UPON RECEIPT OF CLEARANCE FOR USE FROM THE HEALTH DEPARTMENT AND A REQUEST TO TERMINATE CONSTRUCTION SERVICE, PCU WILL REMOVE THE METER AND THE CONTRACTOR SHALL REMOVE THE TEMPORARY JUMPER CONNECTION.
10. CORPORATION STOPS SHALL BE CLOSED AND PLUGGED WITH 2" BRASS PLUGS BY THE CONTRACTOR.

JUMPER CONNECTION (TYPICAL)	**FIGURE WA-06**
POLK COUNTY UTILITIES, FLORIDA	**MARCH, 2012**

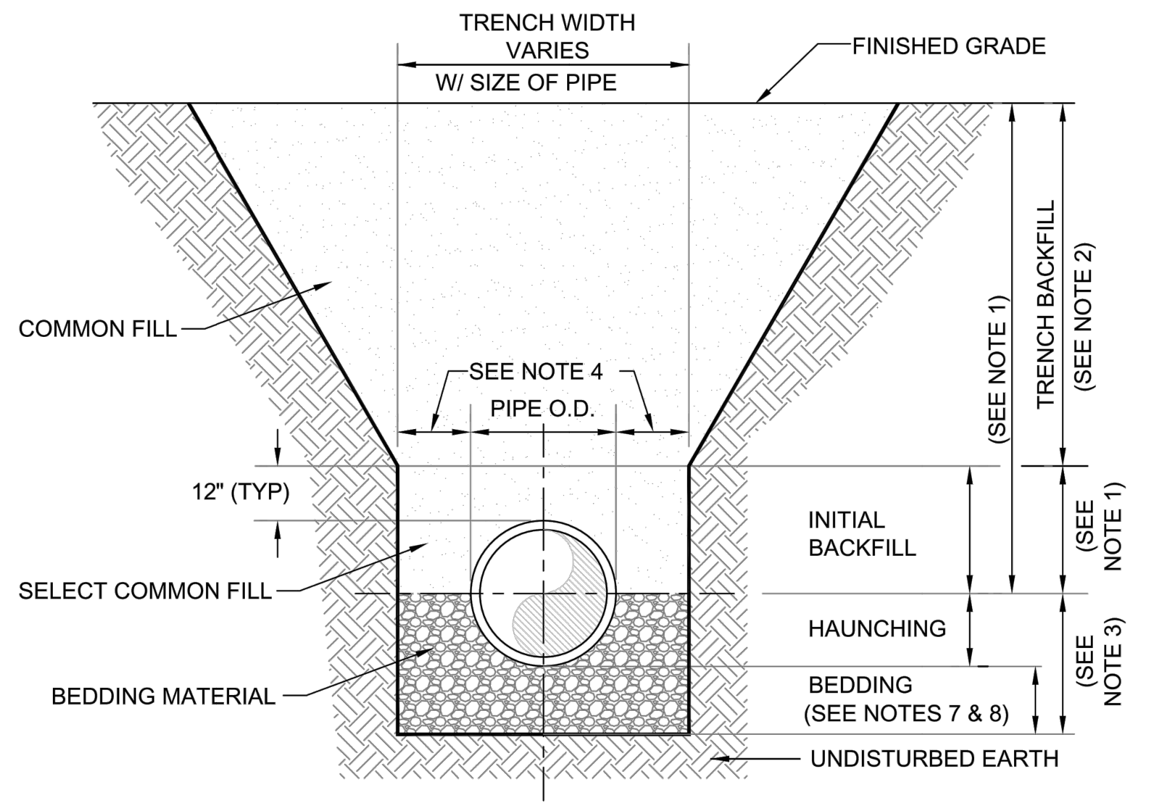

NOTES:
1. SELECT COMMON FILL UNDER & WITHIN 6 FEET OF THE EDGE OF ANY PAVED SURFACE SHALL BE PLACED IN 6" COMPACTED LIFTS TO TOP OF PIPE, THEN 12" COMPACTED LIFTS THEREAFTER, AND COMPACTED TO 100% OF MAX DENSITY PER AASHTO T-99. BACKFILL IN AREAS OUTSIDE THE ROADWAY SHALL BE PLACED IN 6" COMPACTED LIFTS TO TOP OF PIPE THEN 12" COMPACTED LIFTS THEREAFTER AND COMPACTED TO 95% MAX DENSITY PER AASHTO T-180.
2. TRENCH BACKFILL/BACKFILL COMPACTION SHALL BE IN ACCORDANCE WITH THE REGULATIONS OF THE GOVERNING AGENCY HAVING JURISDICTION OVER THE WORK SITE.
3. TYPE A BEDDING MATERIAL SHALL CONFORM TO FDOT NO. 57 AGGREGATE.
4. 15" MAX. (12" MIN.) FOR PIPE DIAMETER LESS THAN 24" AND 24" MAX (18" MIN) FOR PIPE DIAMETER 24" AND LARGER.
5. WATER SHALL NOT BE PERMITTED IN THE TRENCH DURING CONSTRUCTION.
6. ALL PIPE TO BE INSTALLED WITH BELL FACING UPSTREAM TO THE DIRECTION OF THE FLOW.
7. BEDDING DEPTH SHALL BE 4" MINIMUM FOR PIPE DIAMETER UP TO 12" AND 6" MINIMUM FOR PIPE DIAMETER 16" AND LARGER.
8. DEPTH FOR REMOVAL OF UNSUITABLE MATERIAL SHALL GOVERN DEPTH OF BEDDING ROCK BELOW THE PIPE. PCU SHALL DETERMINE IN THE FIELD REQUIRED REMOVAL OF UNSUITABLE MATERIAL TO REACH SUITABLE FOUNDATION.
9. FINAL RESTORATION IN IMPROVED AREAS SHALL BE IN COMPLIANCE WITH ALL APPLICABLE REGULATIONS OF THE GOVERNING AGENCY HAVING JURISDICTION OVER THE WORK SITE. SURFACE RESTORATION WITHIN COUNTY RIGHT-OF-WAY SHALL COMPLY WITH REQUIREMENTS OF POLK COUNTY.

BEDDING AND TRENCHING TYPE A	**FIGURE GR-01**
POLK COUNTY UTILITIES, FLORIDA	**DECEMBER, 2010**

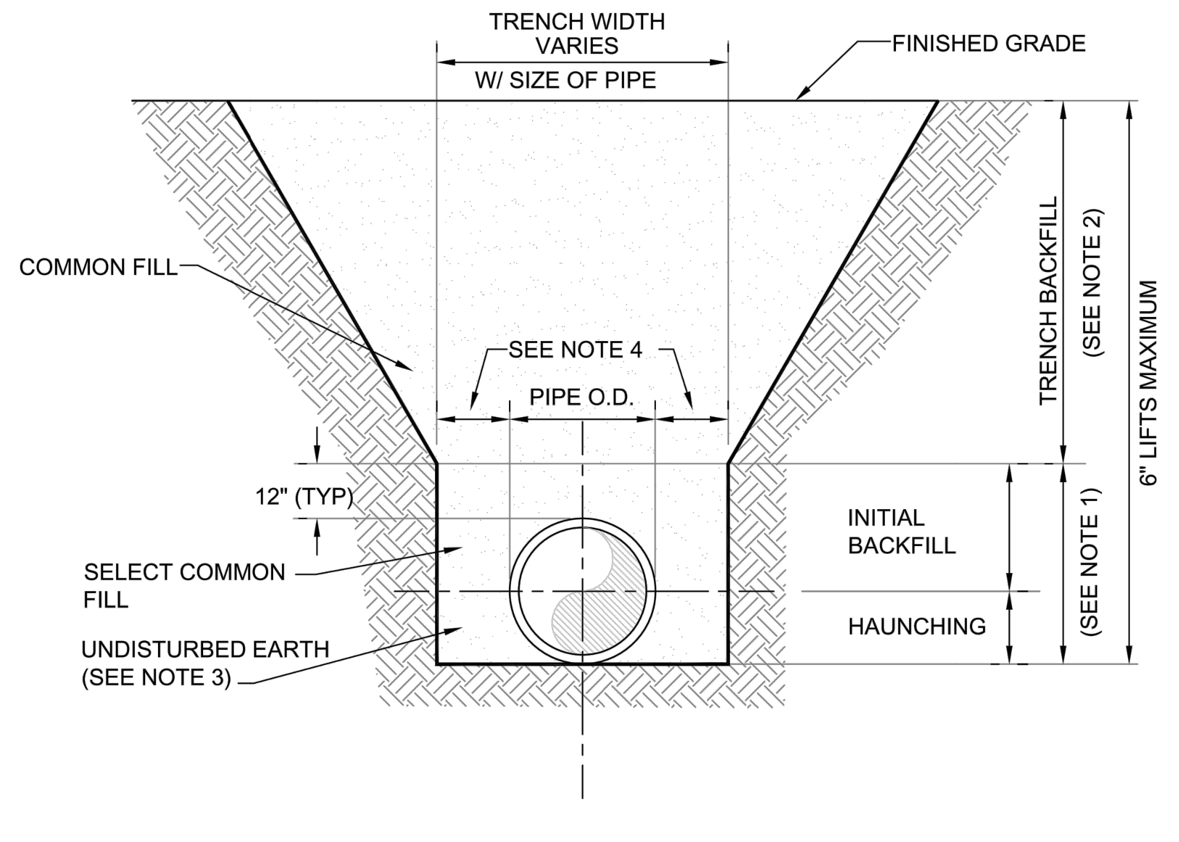

NOTES:
1. SELECT COMMON FILL UNDER & WITHIN 6 FEET OF THE EDGE OF ANY PAVED SURFACE SHALL BE PLACED IN 6" COMPACTED LIFTS TO TOP OF PIPE, THEN 12" COMPACTED LIFTS THEREAFTER, AND COMPACTED TO 100% OF MAX DENSITY PER AASHTO T-99. BACKFILL IN AREAS OUTSIDE THE ROADWAY SHALL BE PLACED IN 6" COMPACTED LIFTS TO TOP OF PIPE THEN 12" COMPACTED LIFTS THEREAFTER AND COMPACTED TO 95% MAX DENSITY PER AASHTO T-180.
2. TRENCH BACKFILL/BACKFILL COMPACTION: SHALL BE IN ACCORDANCE WITH THE REGULATIONS OF THE GOVERNING AGENCY HAVING JURISDICTION OVER THE WORK SITE.
3. PIPE BEDDING UTILIZING SELECT COMMON FILL OR BEDDING ROCK IN ACCORDANCE WITH TYPE A BEDDING AND TRENCHING DETAIL MAY BE REQUIRED AS DIRECTED BY PCU.
4. 15" MAX. (12" MIN.) FOR PIPE DIAMETER LESS THAN 24" AND 24" MAX (12" MIN) FOR PIPE DIAMETER 24" AND LARGER.
5. WATER SHALL NOT BE PERMITTED IN THE TRENCH DURING CONSTRUCTION.
6. ALL PIPE TO BE INSTALLED WITH BELL FACING UPSTREAM TO THE DIRECTION OF THE FLOW.
7. FINAL RESTORATION IN IMPROVED AREAS SHALL BE IN COMPLIANCE WITH ALL APPLICABLE REGULATIONS OF THE GOVERNING AGENCY HAVING JURISDICTION OVER THE WORK SITE. SURFACE RESTORATION WITHIN COUNTY RIGHT-OF-WAY SHALL COMPLY WITH REQUIREMENTS OF POLK COUNTY.

BEDDING AND TRENCHING TYPE B	**FIGURE GR-02**
POLK COUNTY UTILITIES, FLORIDA	**DECEMBER, 2010**

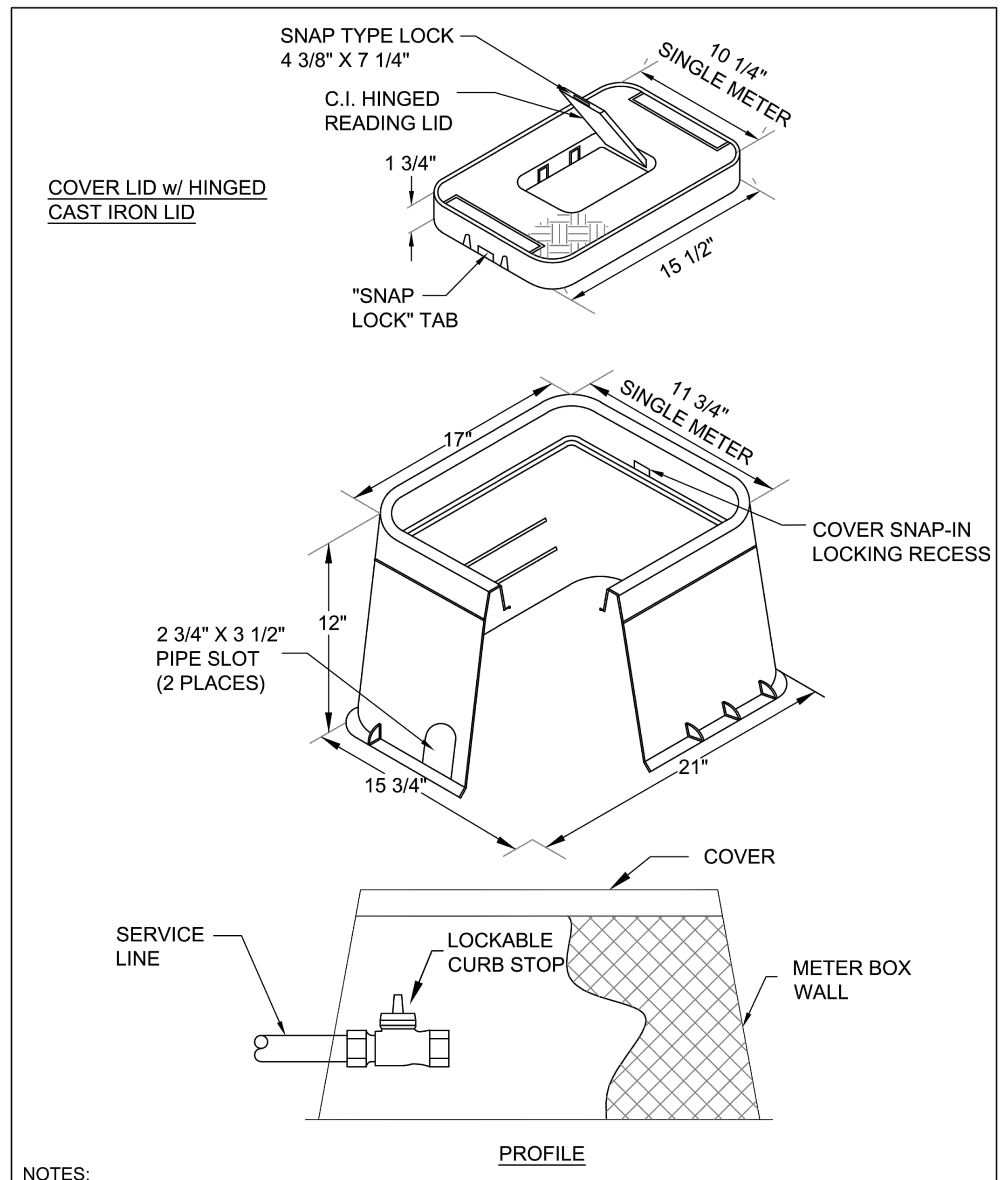

NOTES:
1. METER BOXES AND LIDS SHALL BE BLACK FOR POTABLE WATER AND PURPLE FOR RECLAIMED WATER.
2. THE WORDS "RECLAIMED WATER" AND THE FOLLOWING WORDS " DO NOT DRINK" AND "NO BEBER" SHALL BE CLEARLY MOLDED ON THE TOP OF EACH RECLAIMED WATER LID ALONG WITH THE STANDARD INTERNATIONAL SYMBOL " DO NOT DRINK ".
3. ALL MATERIALS SHALL BE IN ACCORDANCE WITH APPROVED MATERIAL CHECKLIST .

STANDARD RECTANGULAR METER BOX ASSEMBLY POTABLE WATER AND RECLAIMED WATER	**FIGURE GR-20-2**
POLK COUNTY UTILITIES, FLORIDA	**DECEMBER, 2010**

MINIMUM LENGTH (FT) TO BE RESTRAINED ON EACH SIDE OF FITTING(S)

TYPE	D.I.P. PIPE SIZE											
	4"	6"	8"	10"	12"	16"	20"	24"	30"	36"	42"	48"
90° BEND OR BRANCH OF TEE	20	29	37	44	51	65	77	89	105	120	132	144
45° BEND	8	12	15	18	21	27	32	37	44	50	55	60
22-1/2° BEND	4	6	7	9	10	13	15	18	21	24	27	29
11-1/4° BEND	2	3	4	5	6	7	8	9	10	12	13	15
PLUG OR CAP	42	59	77	93	108	138	166	194	231	275	328	391
POINT OF CONNECTION WITH HDPE PIPE	40	40	40	40	40	40	40	40	60	60	60	60

MINIMUM LENGTH (FT) TO BE RESTRAINED ON EACH SIDE OF FITTING(S)

TYPE	PVC OR HDPE PIPE SIZE											
	4"	6"	8"	10"	12"	16"	20"	24"	30"	36"	42"	48"
90° BEND OR BRANCH OF TEE	25	37	47	55	64	82	97	112	132	156	172	188
45° BEND	10	15	19	23	27	34	40	47	55	65	72	78
22-1/2° BEND	5	8	9	12	13	17	19	23	27	32	35	38
11-1/4° BEND	3	4	5	7	8	9	10	12	13	16	17	19
PLUG OR CAP	53	74	97	117	135	173	208	243	289	344	410	488
POINT OF CONNECTION WITH HDPE PIPE	40	40	40	40	40	40	40	60	60	80	80	80

NOTES:
1. FITTINGS SHALL BE RESTRAINED JOINTS UNLESS OTHERWISE INDICATED.
2. INSTALL FULL LENGTH JOINTS WITH TOTAL LENGTH EQUAL TO OR GREATER THAN SHOWN IN THE TABLE.
3. WHERE TWO OR MORE FITTINGS ARE TOGETHER, USE FITTING WHICH YIELDS GREATEST LENGTH OF RESTRAINED PIPE.
4. ALL LINE VALVES AND THROUGH RUN OF TEES SHALL HAVE MJ RESTRAINTS.
5. LENGTHS SHOWN IN THE TABLE HAVE BEEN CALCULATED IN ACCORDANCE WITH THE PROCEDURE OUTLINED IN "THRUST RESTRAINT DESIGN FOR DUCTILE IRON PIPE" AS PUBLISHED BY DIPRA, WITH THE FOLLOWING ASSUMPTIONS:
   WORKING PRESSURE: 150 PSI
   SOIL DESIGNATION: SM (SAND SILT)
   LAYING CONDITIONS: 3
6. THE ENGINEER SHALL VERIFY THESE MINIMUM DESIGN ASSUMPTIONS AND INCREASE LENGTHS WITH THE APPROVAL OF PCU.
7. DI PIPE WRAPPED WITH OR ENCASED IN POLYETHYLENE SHALL BE RESTRAINED SIMILAR TO PVC PIPE.

RESTRAINED PIPE TABLE	**FIGURE GR-04**
POLK COUNTY UTILITIES, FLORIDA	**OCTOBER, 2015**

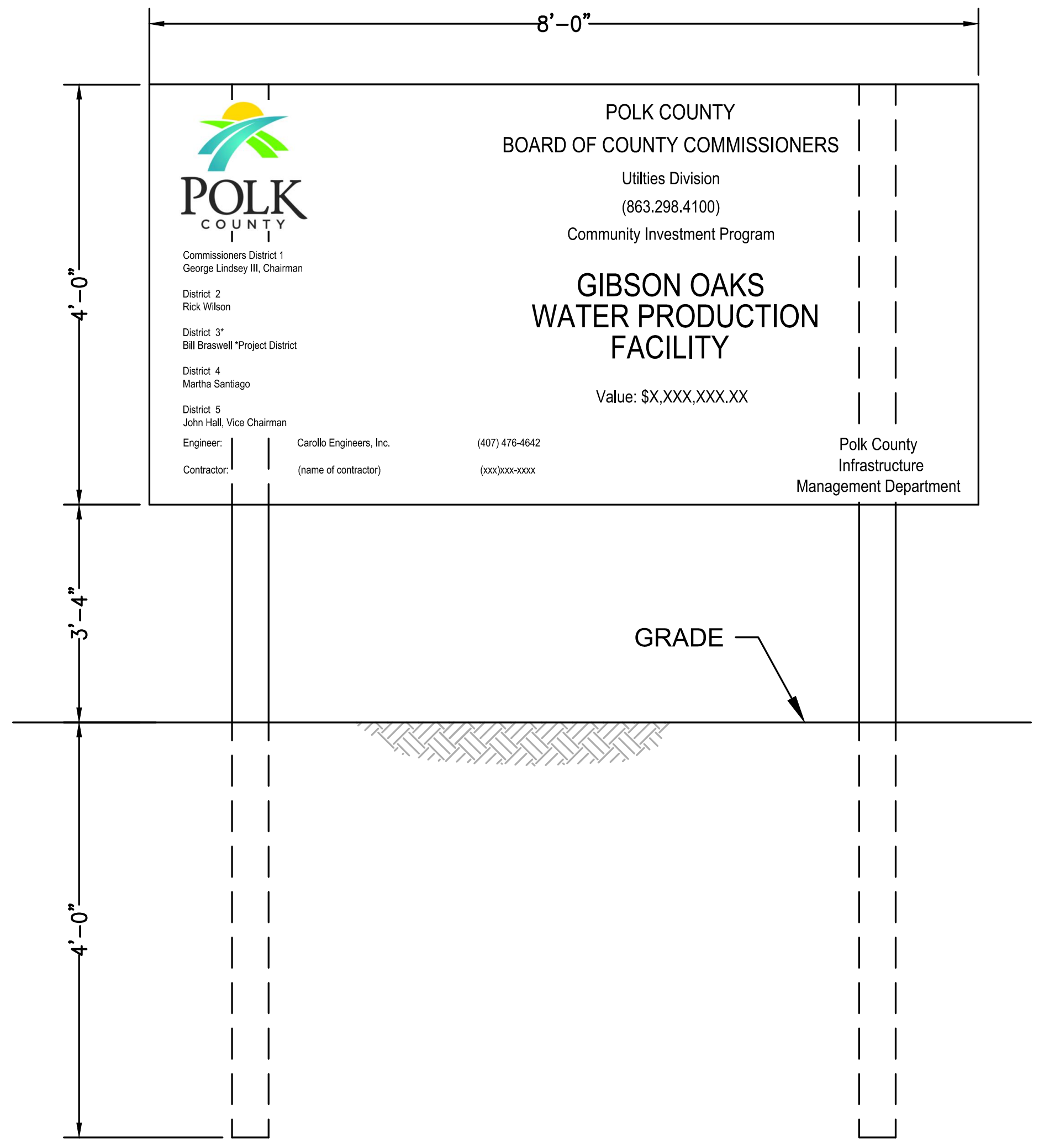

NOTES

1. ALL LETTERING TO BE BLACK EXCEPT AS NOTED.
2. SIGN SHALL BE PURCHASED FROM GRAFFIX NOW (863) 687-9274 OR APPROVED EQUAL
3. MOUNT ON 4"X4" PRESSURE TREATED WOOD POSTS.
4. SIGN SHALL BE APPROXIMATELY 40" ABOVE TOP OF GRADE.
5 CONTRACTOR TO INSTALL AND MAINTAIN SIGN FOR DURATION OF PROJECT. INSTALL SIGN NEAR ENTRACE GATE. DISPOSE OF SIGN AT END OF PROJECT AS DIRECTED BY POLK COUNTY CONUTY REPRESENTATIVE.
6. SUBMIT SHOP DRAWING OF SIGN INSTALLATION WITH 8-1/2" X 11" PROOF COPY OF SIGN LAYOUT FOR APPROVAL.

3 - PROJECT SIGN

SCALE: NTS
FILE: -

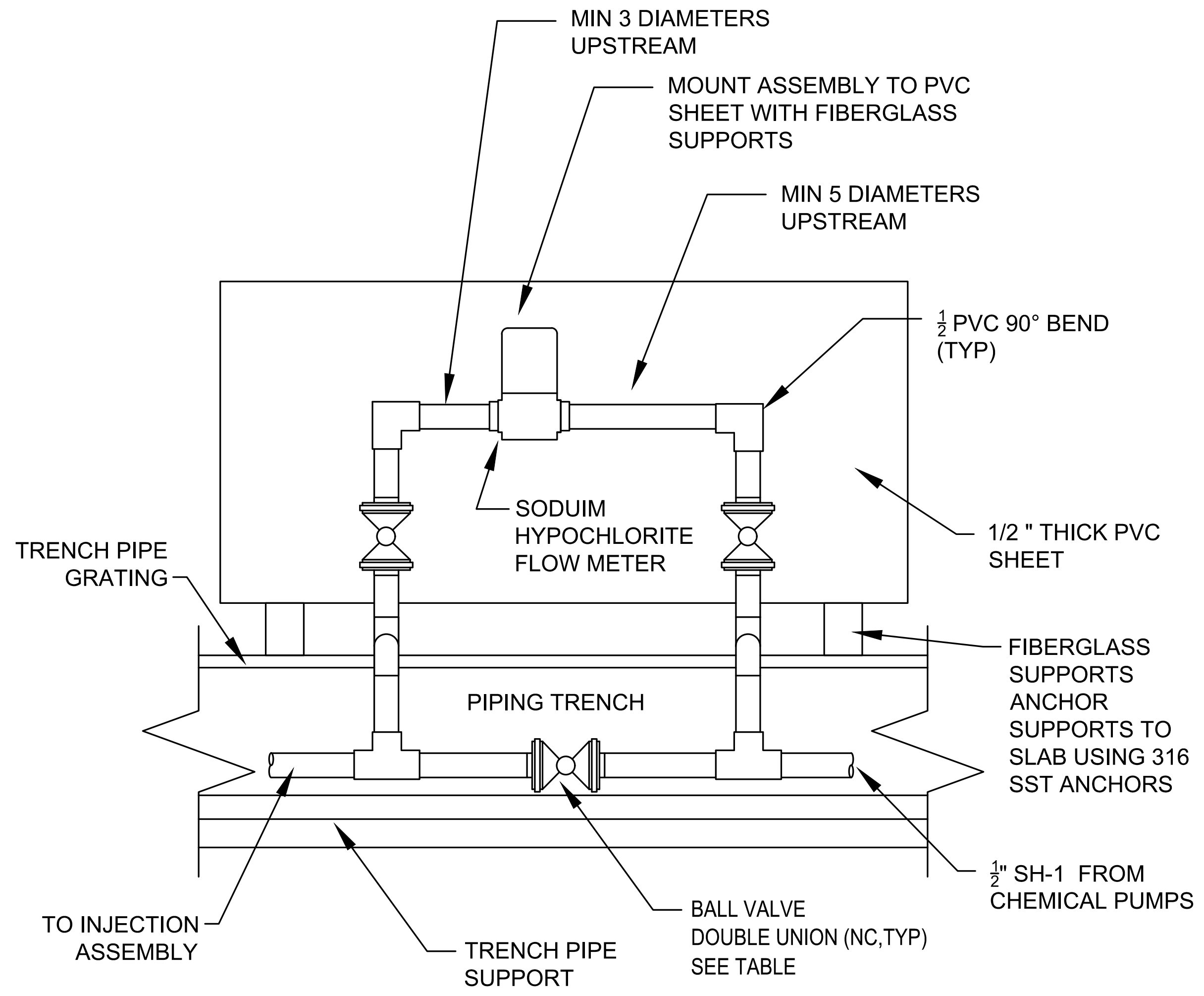

M240 TYP CHEMICAL FLOW METER STATION

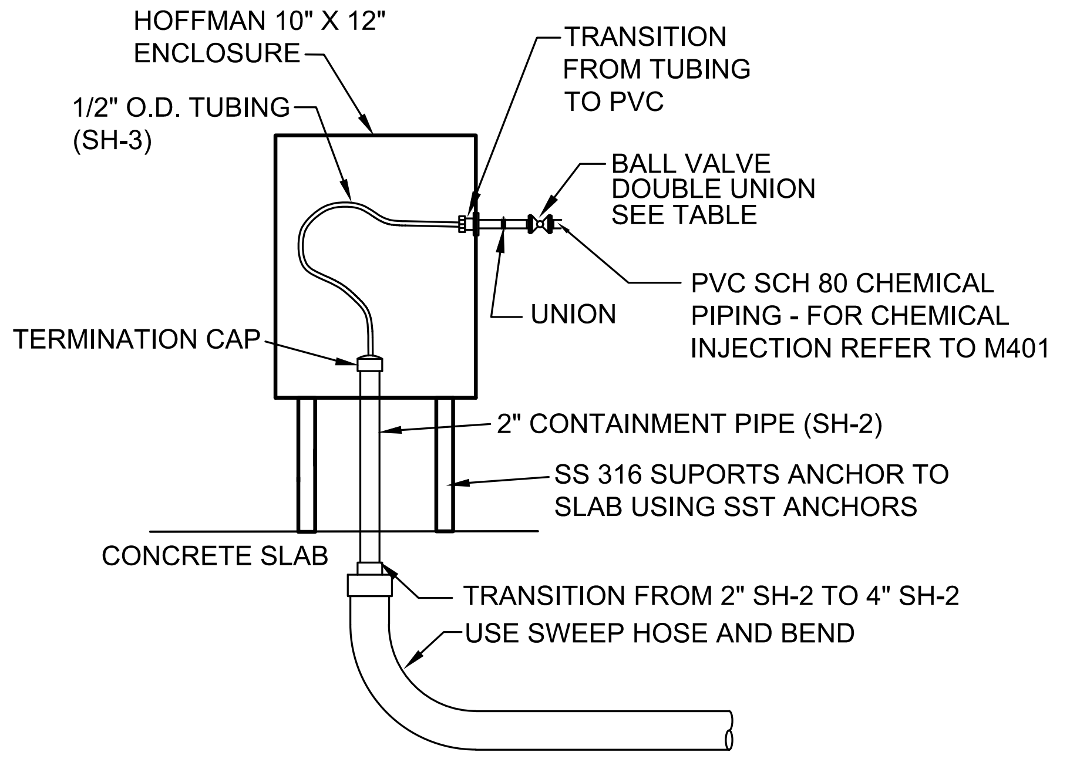

M325 TYP HYPOCHLORITE TRANSITION POINTS

REV	DATE	BY	DESCRIPTION

DESIGNED HV
DRAWN AG
CHECKED DK
DATE OCTOBER 2019

DWAYNE R. KREIDLER
No 54579

PRINTED COPIES OF THIS DOCUMENT ARE NOT CONSIDERED SIGNED AND SEALED AND THE SIGNATURE MUST BE VERIFIED ON ANY ELECTRONIC COPIES.

POLK COUNTY

carollo®
200 East Robinson Street, Suite1400
Orlando, FL 32801
Phone (407) 478-4642
CA No. 8571

POLK COUNTY UTILITIES
GIBSON OAKS WATER PRODUCTION FACILITY
MECHANICAL
DETAILS IV

VERIFY SCALES
BAR IS ONE INCH ON ORIGINAL DRAWING
0 1"
IF NOT ONE INCH ON THIS SHEET, ADJUST SCALES ACCORDINGLY

JOB NO. 9621C.10
DRAWING NO. 00GM04
SHEET NO. 23 OF 24

$$$$DATE$$$$
$$$$USER$$$$
$$$$PLOT_INFO$$$$
LAST SAVED BY: ggonzalez

PROJECT NO.
FILE NAME: 9621C10_00GM04_LEVEL_II.dwg

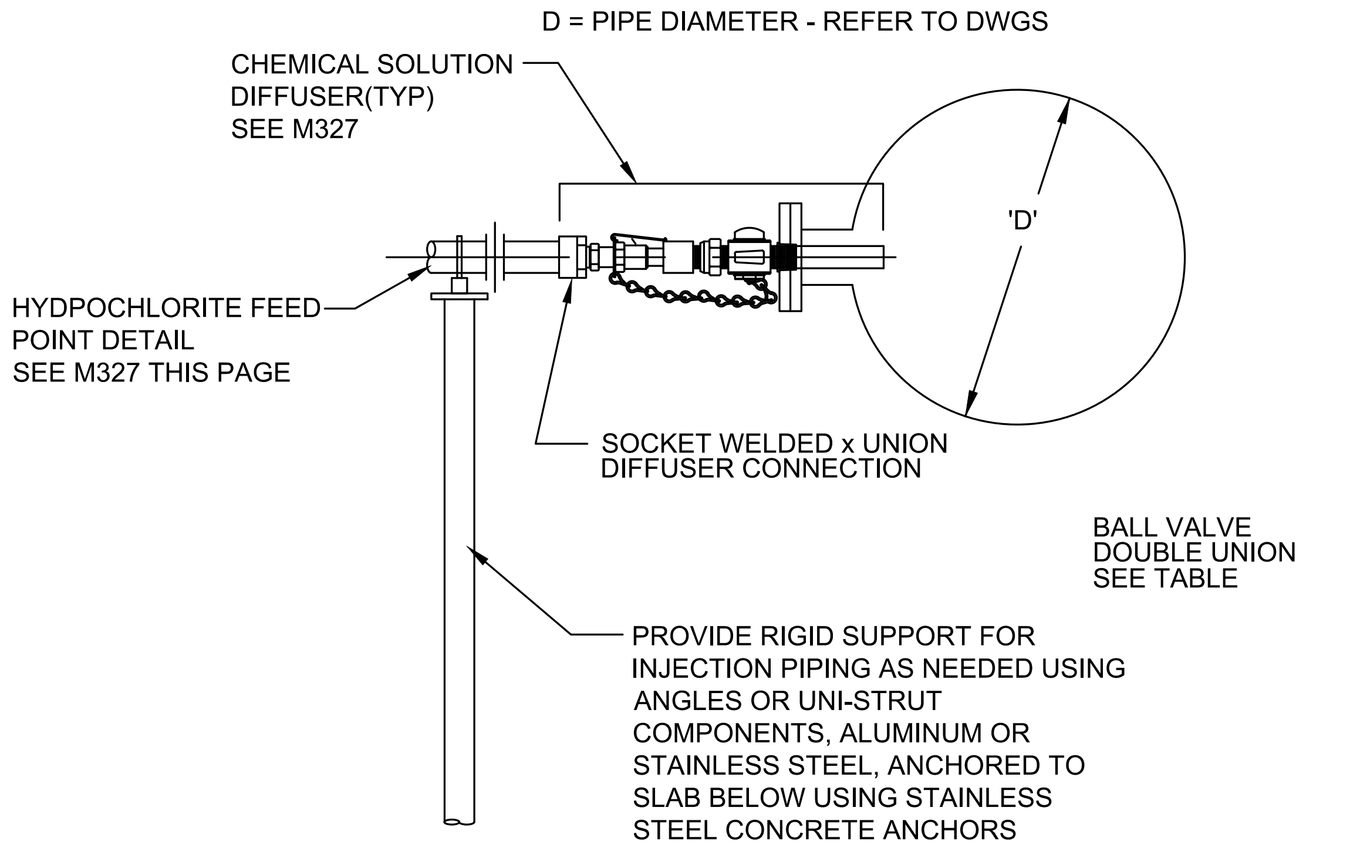

CHEMICAL	PIPE MATERIAL	VALVE TYPE
SODIUM HYPOCHLORITE	SCH 80 PVC SOLVENT WELDED	PVC BALL VALVE, DOUBLE UNION, VENTED

M326 TYP CHEMICAL INJECTION ASSEMBLY

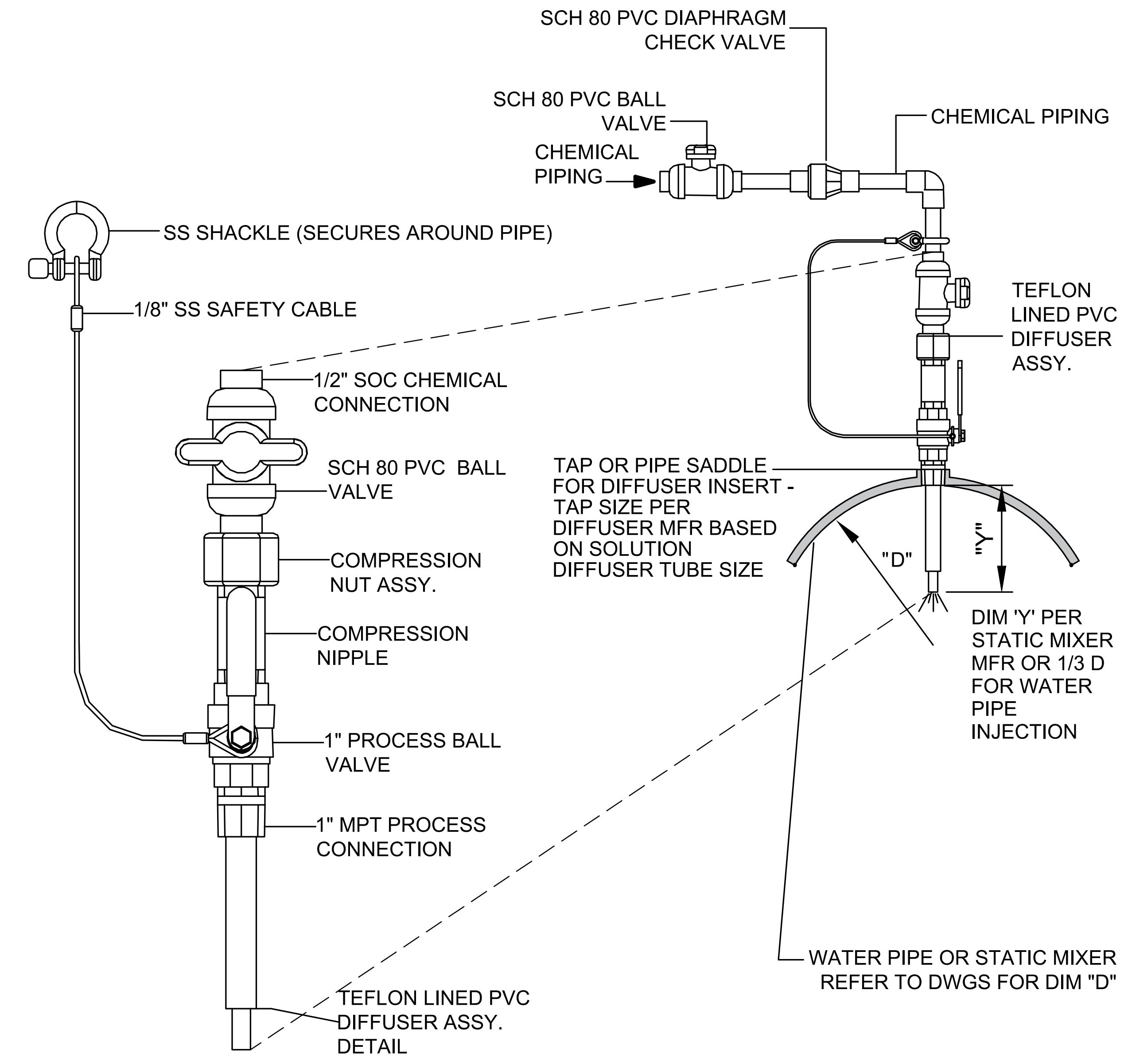

M327 TYP CHEMICAL SOLUTION DIFFUSER

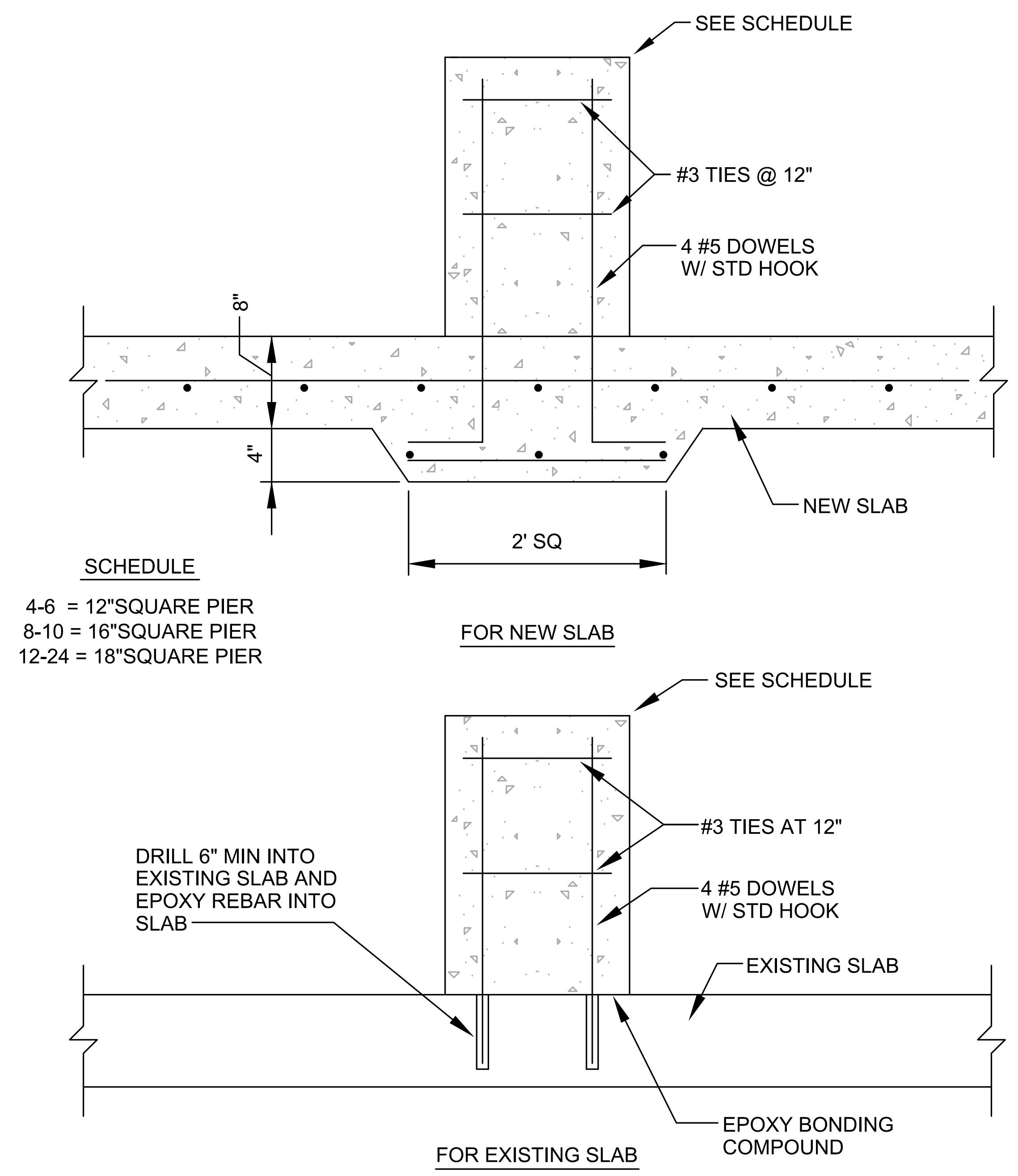

P603 TYP PEDESTAL SUPPORT

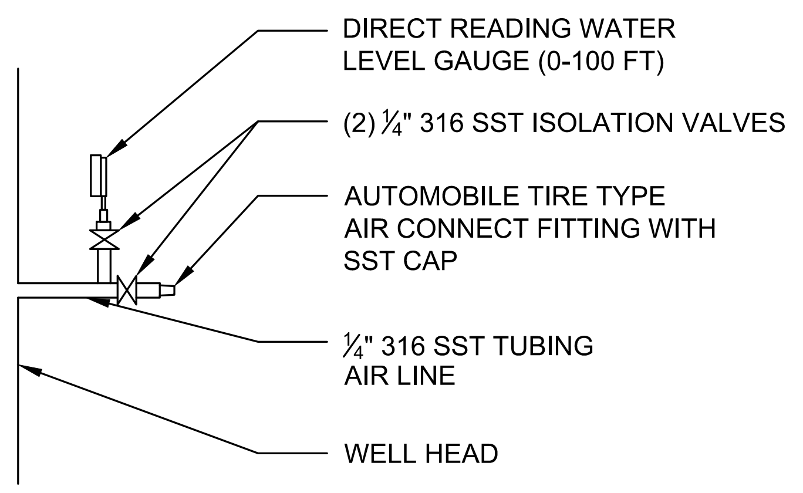

M328 TYP AIR LINE ASSEMBLY

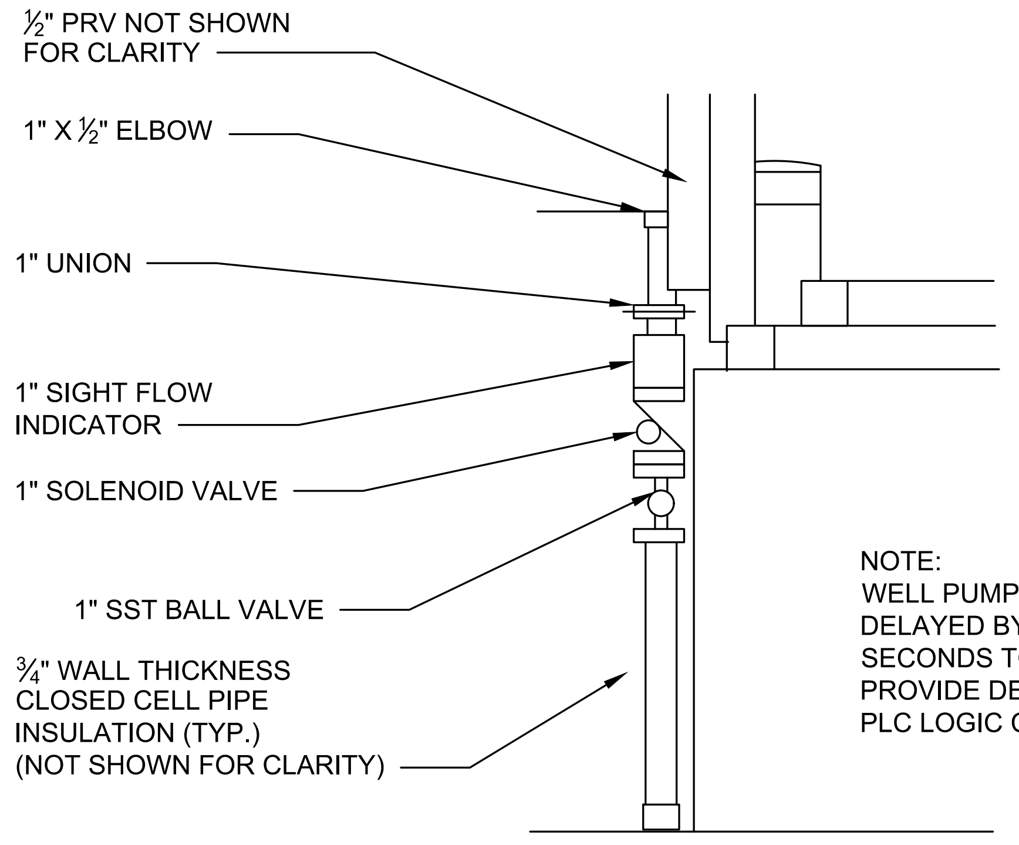

NOTE:
WELL PUMP/ MOTOR STARTING IS DELAYED BY FIFTEEN (15) SECONDS TO ALLOW PRE-LUBE. PROVIDE DELAY BY RELAY OR PLC LOGIC CONTROL.

M329 TYP PRE-LUBRICATION DETAIL

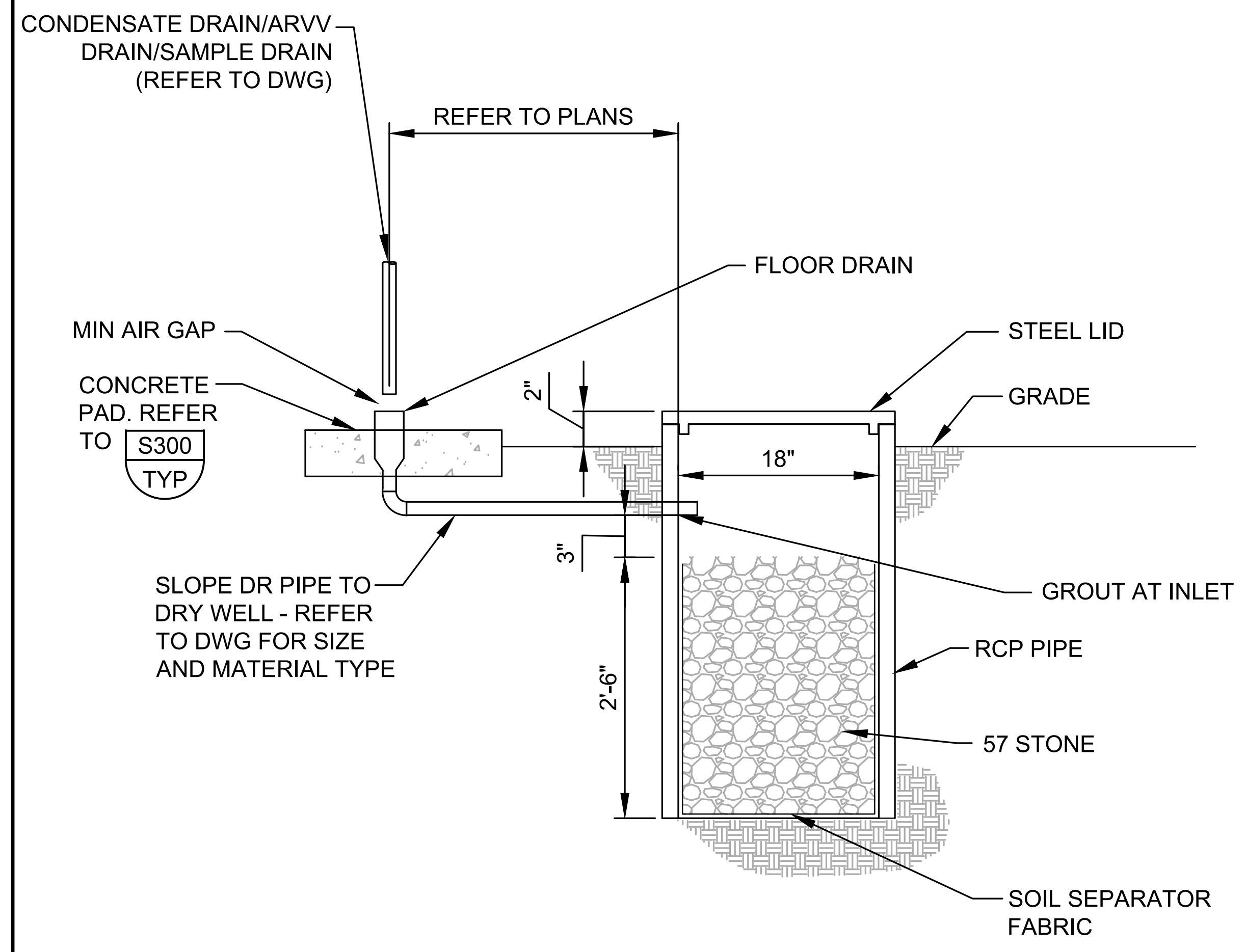

H280 TYP DRYWELL DETAIL

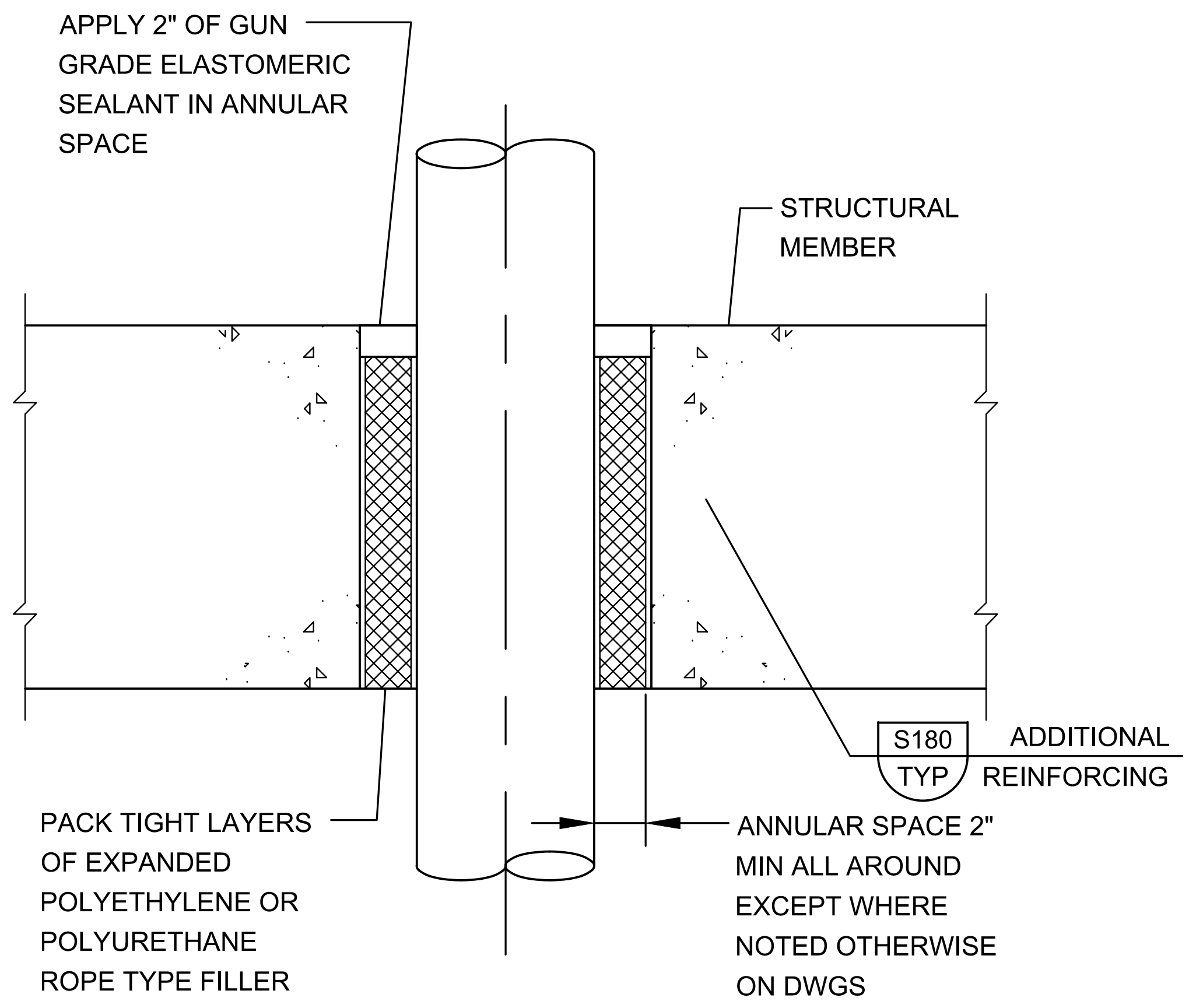

M413 TYP SLAB PENETRATION

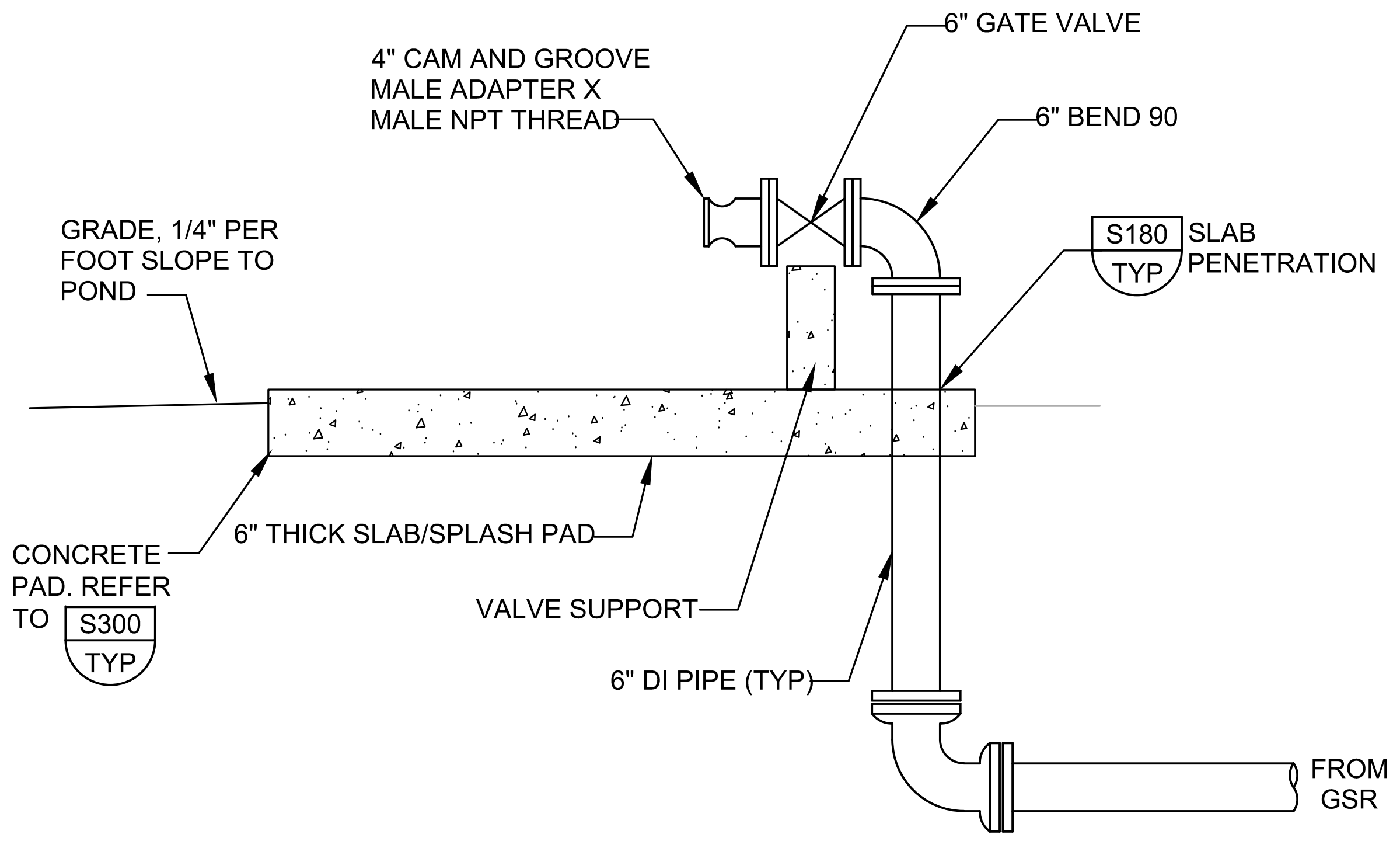

1 - DRAIN DETAIL
SCALE: 1/2" = 1'-0"
FILE:

SHEET 1 OF 1 6/14/2019

REV	DATE	BY	DESCRIPTION

DESIGNED
HV
DRAWN
AG
CHECKED
DK
DATE
OCTOBER 2019

DWAYNE R. KREIDLER
No 54579

PRINTED COPIES OF THIS DOCUMENT ARE NOT CONSIDERED SIGNED AND SEALED AND THE SIGNATURE MUST BE VERIFIED ON ANY ELECTRONIC COPIES.

POLK COUNTY

carollo®
200 East Robinson Street, Suite1400
Orlando, FL 32801
Phone (407) 478-4642
CA No. 8571

POLK COUNTY UTILITIES
GIBSON OAKS WATER PRODUCTION FACILITY
MECHANICAL
DETAILS V

VERIFY SCALES
BAR IS ONE INCH ON ORIGINAL DRAWING
0 1"
IF NOT ONE INCH ON THIS SHEET, ADJUST SCALES ACCORDINGLY

JOB NO.
9621C.10
DRAWING NO.
00GM05
SHEET NO.
24 OF 24

LAST SAVED BY: ggonzalez

PROJECT NO.
FILE NAME: 9621C10_00GM05_LEVEL_II.dwg

Request to Transfer
Environmental Resource Permit

Instructions: To be completed, executed, and submitted by the new owner to the Agency within 30 days after any transfer of ownership or control of the real property where the permitted activity is located.

Use of this form is not required when a valid permit is in the operation and maintenance phase. In such case, the owner must notify the Agency in writing within 30 days of a change in ownership or control of the entire real property, project, or activity covered by the permit. The notification may be by letter or e-mail, or through use of this form, and must be sent to the office that issued the permit. A processing fee is not required for this notice. The permit shall automatically transfer to the new owner or person in control, except in cases of abandonment, revocation, or modification of a permit as provided in Sections 373.426 and 373.429, F.S. (2013). If a permittee fails to provide written notice to the Agency within 30 days of the change in ownership or control, or if the change does not include the entire real property or activity covered by the permit, then the transfer must be requested using this form.

Permit No: Application No(s).: Acres to be Transferred:

Permitted Project:

Proposed Project Name (if different):

Phase of Project (if applicable):

I hereby notify the Agency that I have acquired ownership or control of the land on which the permitted system is located through the sale or other legal transfer of the land. By signing below, I hereby certify that I have sufficient real property interest or control in the land in accordance with subsection 4.2.3(d) of Applicant's Handbook Volume I; attached is a copy of my title, easement, or other demonstration of ownership or control in the land, including any revised plats, as recorded in the Public Records. I request that the permit be modified to reflect that I agree to be the new permittee. By so doing, I acknowledge that I have examined the permit terms, conditions, and drawings, and agree to accept all rights and obligations as permittee, including agreeing to be liable for compliance with all of the permit terms and conditions~~,~~ and to be liable for any corrective actions required as a result of any violations of the permit after approval of this modification by the Permitting Agency. Also attached are copies of any recorded restrictive covenants, articles of incorporation, and certificate of incorporation that may have been changed as a result of my assuming ownership or control of the lands. As necessary, I agree to furnish the Agency with demonstration that I have the ability to provide for the operation and maintenance of the system for the duration of the permit in accordance with subsection 12.3 of Applicant's Handbook Volume I.

Name of Proposed Permittee:

Mailing Address:

City: State: Zip:

Telephone: E-mail:

Signature of Proposed Permittee Date:

Name and Title

Enclosures:

☐ Copy of title, easement, or other demonstration of ownership or control in the land, as recorded in the Public Records
☐ Copy of current plat(s) (if any), as recorded in the Public Records
☐ Copy of current recorded restrictive covenants and articles of incorporation (if any)
☐ Other

CONSTRUCTION COMMENCEMENT NOTICE

Instructions: In accordance with Chapter 62-330.350(1)(d), F.A.C., complete and submit this form at least 48 hours prior to commencement of activity authorized by permit.

Permit No. ______________________ Application No. ______________________

Project Name ______________________ Phase ______________________

Construction of the system authorized by the above referenced Environmental Resource Permit and Application, is expected to commence on ______________________ , 20 ________
and will have an estimated completion date of ______________________ , 20 ________

PLEASE NOTE: If the actual construction commencement date is not known within 30 days of issuance of the permit, District staff should be so notified in writing. As soon as a construction commencement date is known, the permittee shall submit a completed construction commencement notice form.

______________________ ______________________
Permittee's or Authorized Agent's Signature Company

______________________ ______________________ ______________________
Print Name Title Date

______________________ ______________________
E-mail Phone Number

AS-BUILT CERTIFICATION AND REQUEST FOR CONVERSION TO OPERATION PHASE

Instructions: Complete and submit this page within 30 days of completion of the permitted activities, as required by the permit conditions. **Any components of the permitted activities that are not in substantial conformance with the permit must be corrected or a modification of the permit will be required in accordance with Rule 62-330.315, Florida Administrative Code (F.A.C.).** The operation phase of the permit is effective when the construction certification for the entire permit/application is approved by the Agency. If the final operation and maintenance entity is not the permittee, the permittee shall operate the system, works or other activities temporarily until such time as the transfer to the operation entity is finalized (use Form 62-330.310(2)).

Permit No.:	Application No(s).	Permittee:
Project Name:		Phase (if applicable):

I HEREBY CERTIFY THAT (please choose accurately and check only one box):

☐ I hereby notify the Agency of the completion of construction of all the components of the system, works or other activities for the above referenced project and certify that it has been constructed in substantial conformance with the plans specifications and conditions permitted by the Agency. Any minor deviations will not prevent the system from functioning in compliance with the requirements of Chapter 62-330, F.A.C. Attached is documentary evidence of satisfaction of any outstanding permit conditions, other than long term monitoring and inspection requirements.

☐ At the time of final inspection, the works or activities were NOT completed in substantial conformance with the plans and specifications permitted by the Agency. (The registered professional shall describe the substantial deviation(s) in writing, and provide confirming depiction on the as-built drawings and information.)

If there were substantial deviations, plans must be submitted clearly labeled as “as-built” or “record” drawings reflecting the substantial deviations. If there are no substantial deviations, do not submit “as built” drawings.

For activities that require certification by a registered professional:

By:

Signature

Print Name

Fla. Lic. or Reg. No

! AFFIX SEAL !

Company Name

Company Address

Date

For activities that do not require certification by a registered professional:

By:

Signature

Print Name

Company Name

Company Address

Date

DRAWINGS AND INFORMATION CHECKLIST

Following is a list of information that is to be verified and/or submitted by the Registered Professional or Permittee:

1. All surveyed dimensions and elevations shall be certified by a registered Surveyor or Mapper under Chapter 472, F.S.

2. The registered professional's certification shall be based upon on-site observation of construction (scheduled and conducted by the registered professional of record or by a project representative under direct supervision) and review of as-built drawings, with field measurements and verification as needed, for the purpose of determining if the work was completed in accordance with original permitted construction plans, specifications and conditions.

3. If submitted, the as-built drawings are to be based on the permitted construction drawings revised to reflect any substantial deviations made during construction. Both the original design and constructed condition must be clearly shown. The plans need to be clearly labeled as "as-built" or "record" drawings that clearly highlight (such as through "red lines" or "clouds") any substantial deviations made during construction. As required by law, all surveyed dimensions and elevations required shall be verified and signed, dated and sealed by an appropriate registered professional. The following information, at a minimum, shall be verified on the as-built drawings, and supplemental documents if needed:

    a. Discharge structures - Locations, dimensions and elevations of all, including weirs, orifices, gates, pumps, pipes, and oil and grease skimmers;
    b. Detention/Retention Area(s) – Identification number, size in acres, side slopes (h:v), dimensions, elevations, contours or cross-sections of all, sufficient to determine stage-storage relationships of the storage area and the permanent pool depth and volume below the control elevation for normally wet systems,
    c. Side bank and underdrain filters, or exfiltration trenches - locations, dimensions and elevations of all, including clean-outs, pipes, connections to control structures and points of discharge to receiving waters;
    d. System grading - dimensions, elevations, contours, final grades or cross-sections to determine contributing drainage areas, flow directions and conveyance of runoff to the system discharge point(s);
    e. Conveyance - dimensions, elevations, contours, final grades or cross-sections of systems utilized to divert off-site runoff around or through the new system;
    f. Benchmark(s) - location and description (minimum of one per major water control structure);
    g. Datum- All elevations should be referenced to a vertical datum clearly identified on the plans, preferably the same datum used in the permit plans.

4. Wetland mitigation or restoration areas - Show the plan view of all areas, depicting a spatial distribution of plantings conducted by zone (if plantings are required by permit), with a list showing all species planted in each zone, numbers of each species, sizes, date(s) planted and identification of source of material; also provide the dimensions, elevations, contours and representative cross-sections depicting the construction.

5. Any additional information or outstanding submittals required by permit conditions or to document permit compliance, other than long-term monitoring or inspection requirements.

REQUEST FOR TRANSFER OF ENVIRONMENTAL RESOURCE PERMIT TO THE PERPETUAL OPERATION ENTITY

Instructions: Complete this form to transfer to the permit to the operation and maintenance entity. This form can be completed concurrently with, or within 30 days of approval of the As-Built Certification and Request for Conversion to Operation Phase (Form 62-330.310(1)). Please include all documentation required under Section 12.2.1(b) of Applicant's Handbook Volume 1. (see checklist below). **Failure to submit the appropriate final documents will result in the permittee remaining liable for operation and maintenance of the permitted activities.**

Permit No.:
Application No(s).
Project Name:
Phase (if applicable):

A. REQUEST TO TRANSFER: The permittee requests that the permit be transferred to the legal entity responsible for operation and maintenance (O&M).

By:
Signature of Permittee
Name and Title
Company
Company Address
Phone
City, State, Zip

B. AGREEMENT FOR SYSTEM OPERATION AND MAINTENANCE RESPONSIBILITY: The below-named legal entity agrees to operate and maintain the works or activities in compliance with all permit conditions and provisions of Chapter 62-330, Florida Administrative Code (F.A.C.) and Applicant's Handbook Volumes I and II in perpetuity. Authorization for any proposed modification to the permitted activities shall be applied for and obtained prior to conducting such modification.

By:
Signature of Representative of O&M Entity
Name of Entity for O&M
Name and Title
Address
Email Address
City, State, Zip
Phone
Date

Enclosed are the following documents, as applicable:

☐ Copy of recorded transfer of title to the operating entity for the common areas on which the stormwater management system is located (unless dedicated by plat)
☐ Copy of all recorded plats
☐ Copy of recorded declaration of covenants and restrictions, amendments, and associated exhibits
☐ Copy of filed articles of incorporation and documentary evidence of active corporate status with the Department of State, Division of Corporations (for corporations)
☐ A completed, signed, and notarized affidavit attesting that the operating entity meets the requirements of Section 12.3 of Environmental Resource Permit Applicant's Handbook Volume I.(Note- this is optional, but aids in processing of this request)

POLK COUNTY

GIBSON OAKS WATER PRODUCTION FACILITY

BID SET

APPENDIX A2

SPECIFIC PERMIT FOR CONSTRUCTION OF PWS COMPONENTS

Mission:
To protect, promote & improve the health of all people in Florida through integrated state, county & community efforts.

Florida HEALTH
Polk County

Ron DeSantis
Governor

Scott A. Rivkees, MD
State Surgeon General

Vision: To be the **Healthiest State** in the Nation

ELECTRONIC CORRESPONDENCE

PERMITTEE:
Polk County Northwest Public Water System
Mark Addison, P.E.
1011 Jim Keene Blvd
Winter Haven, FL 33880
markaddison@polk-county.net

PWS ID NUMBER: 6532348
PERMIT NUMBER: 133675-181
DATE OF ISSUE: **December 10, 2019**
EXPIRATION DATE: **December 9, 2019**
COUNTY: Polk
PROJECT: Gibson Oaks Water Production Facility

This permit is issued under the provisions of Chapter 403, Florida Statutes (F.S.), and Florida Administrative Code (F.A.C.) Chapters 62-4, 62-550, 62-555, 62-560 and 62-699. The above named permittee is hereby authorized to perform the work or operate the facility shown on the application and approved drawings, plans, and other documents attached hereto or on file with the Department and made a part hereof and specifically described as follows:

TO CONSTRUCT: New onsite raw water supply well, install pumps into 2 offsite wells at Sherwood Lakes, modify existing well at Lake Gibson, new chemical feed system, new high service pumps, new control system, and associated piping.

PROPOSED CONSTRUCTION INCLUDES:

- Outfit the newly completed onsite raw water supply well with a new well pump,
- Outfit the two newly completed offsite raw water supply wells at Sherwood Lakes with new well pumps,
- Retrofit and modify the existing offsite raw water supply well at Lake Gibson and outfit with a well pump,
- Construct new yard piping, stormwater system, site entrance, and service roadway,
- Construct a new ground storage reservoir (GSR) with a tray aerator with provisions for a second GSR in the future,
- Construct a new chemical storage and feed system,
- Construct a new high service distribution pump station (HSDPS),
- Construct a new concrete masonry unit (CMU) operations building,
- Construct a new electrical and instrumentation system with an emergency power generator system,
- Offsite routing of the raw water and finish water piping.

The permitted operating maximum-day capacity is 5,530,000 gpd. (Lake Gibson Plant)

IN ACCORDANCE WITH: preliminary design report, engineering drawings and related documents, prepared by Dwayne R Kreidler, P.E., [Carollo].

LOCATION: 8251 East Tom Costine Road, Lakeland, FL 33809

A. General Conditions

The permittee shall be aware of and operate under the Permit Conditions below. These applicable conditions are binding upon the permittee and enforceable pursuant to Chapter 403, Florida Statutes. [F.A.C. Rule 62-555.533(1)]

1. The terms, conditions, requirements, limitations and restrictions set forth in this permit, are "permit conditions" and are binding and enforceable pursuant to Sections 403.141, 403.727, or 403.859 through 403.861, F.S. The permittee is placed on notice that the Department will review this permit periodically and may initiate enforcement action for any violation of these conditions.

2. This permit is valid only for the specific processes and operations applied for and indicated in the approved drawings or exhibits. Any unauthorized deviation from the approved drawings, exhibits, specifications, or conditions of this permit may constitute grounds for revocation and enforcement action by the Department.

3. As provided in Subsections 403.087(6) and 403.722(5), F.S., the issuance of this permit does not convey any vested rights or any exclusive privileges. Neither does it authorize any injury to public or private property or any invasion of personal rights, nor any infringement of federal, state, or local laws or regulations. This permit is not a waiver of or approval of any other department permit that may be required for other aspects of the total project which are not addressed in this permit.

4. This permit conveys no title to land or water, does not constitute State recognition or acknowledgment of title, and does not constitute authority for the use of submerged lands unless herein provided and the necessary title or leasehold interests have been obtained from the State. Only the Trustees of the Internal Improvement Trust Fund may express State opinion as to title.

5. This permit does not relieve the permittee from liability for harm or injury to human health or welfare, animal, or plant life, or property caused by the construction or operation of this permitted source, or from penalties therefore; nor does it allow the permittee to cause pollution in contravention of Florida Statutes and Department rules, unless specifically authorized by an order from the Department.

6. The permittee shall properly operate and maintain the facility and systems of treatment and control (and related appurtenances) that are installed and used by the permittee to achieve compliance with the conditions of this permit, as required by Department rules. This provision includes the operation of backup or auxiliary facilities or similar systems when necessary to achieve compliance with the conditions of the permit and when required by Department rules.

7. The permittee, by accepting this permit, specifically agrees to allow authorized Department personnel, upon presentation of credentials or other documents as may be required by law and at reasonable times (reasonable time may depend on the nature of the concern being investigated), access to the premises where the permitted activity is located or conducted to:

   a. Have access to and copy any records that must be kept under conditions of the permit;
   b. Inspect the facility, equipment, practices, or operations regulated or required under this permit; and
   c. Sample or monitor any substances or parameters at any location reasonably necessary to assure compliance with this permit or Department rules.

8. If, for any reason, the permittee does not comply with or will be unable to comply with any condition or limitation specified in this permit, the permittee shall immediately provide the Department with the following information:

   a. A description of and cause of noncompliance; and
   b. The period of noncompliance, including dates and times; or, if not corrected, the anticipated time the noncompliance is expected to continue, and steps being taken to reduce, eliminate, and prevent recurrence of the noncompliance. The permittee shall be responsible for any and all damages which may result and may be subject to enforcement action by the Department for penalties or for revocation of this permit.

9. In accepting this permit, the permittee understands and agrees that all records, notes, monitoring data and other information relating to the construction or operation of this permitted source which are submitted to the Department may be used by the Department as evidence in any enforcement case involving the permitted source arising under the Florida Statutes or Department rules, except where such use is prescribed by Sections 403.111 and 403.73, F.S. Such evidence shall only be used to the extent it is consistent with the Florida Rules of Civil Procedure and appropriate evidentiary rules.

10. The permittee agrees to comply with changes in Department rules and Florida Statutes after a reasonable time for compliance; provided, however, the permittee does not waive any other rights granted by Florida Statutes or Department rules. A reasonable time for compliance with a new or amended surface water quality standard, other than those standards addressed in Rule 62-302.500, shall include a reasonable time to obtain or be denied a mixing zone for the new or amended standard.

11. This permit is transferable only upon Department approval in accordance with Rule 62- 4.120 and 62-730.300, F.A.C., as applicable. The permittee shall be liable for any non-compliance of the permitted activity until the transfer is approved by the Department.

12. This permit or a copy thereof shall be kept at the work site of the permitted activity.

13. This permit also constitutes:

    a. Determination of Best Available Control Technology (BACT)
    b. Determination of Prevention of Significant Deterioration (PSD)
    c. Certification of compliance with State Water Quality Standards (Section 401, PL 92-500)
    d. Compliance with New Source Performance Standards

14. The permittee shall comply with the following:

    a. Upon request, the permittee shall furnish all records and plans required under Department rules. During enforcement actions, the retention period for all records will be extended automatically unless otherwise stipulated by the Department.

    b. The permittee shall hold at the facility or other location designated by this permit records of all monitoring information (including all calibration and maintenance records and all original strip chart recordings for continuous monitoring instrumentation) required by the permit, copies of all reports required by this permit, and records of all data used to complete the application for this permit. These materials shall be retained at least three years from the date of the sample, measurement, report, or application unless otherwise specified by Department rule.

    c. Records of monitoring information shall include:
        i. the date, exact place, and time of sampling or measurements;
        ii. the person responsible for performing the sampling or measurements;
        iii. the dates analyses were performed;
        iv. the person responsible for performing the analyses;
        v. the analytical techniques or methods used;
        vi. the results of such analyses.

15. When requested by the Department, the permittee shall within a reasonable time furnish any information required by law which is needed to determine compliance with the permit. If the permittee becomes aware the relevant facts were not submitted or were incorrect in the permit application or in any report to the Department, such facts or information shall be corrected promptly.

B. Regulatory Section

1. All construction must be in accordance with this permit. Before commencing work on project changes for which a construction permit modification is required per 62-555.536(1), the permittee shall submit to the Department a written request for a permit modification. Each such request shall be accompanied by one copy of a revised construction permit application, the proper processing fee and one copy of either a revised preliminary design report or revised drawings, specifications and design data. [F.A.C. Rule 62-555.536].

2. Permitted construction or alteration of public water supply systems must be supervised during construction by a professional engineer registered in the State of Florida if the project was designed under the responsible charge of a professional engineer licensed in the State of Florida. The permittee must retain the service of a professional engineer registered in the State of Florida to observe that construction of the project is in accordance with the engineering plans and specifications as submitted in support of the application for this permit. [F.A.C. Rule 62-555.520(3)].

3. If prehistoric or historic artifacts, such as pottery or ceramics, stone tools or metal implements, dugout canoe remains, or any other physical remains that could be associated with Native American cultures, or early colonial or American settlement are encountered at any time within the project site area, the permitted project should cease all activities involving subsurface disturbance in the immediate vicinity of such discoveries. The permittee, or other designee, should contact the Florida Department of State, Division of Historical Resources, Compliance and Review Section at 850.245.6333 or 800.847.7278, as well as the appropriate permitting agency office. Project activities should not resume without verbal and/or written authorization from the Division of Historical Resources and the permitting agency. In the event that unmarked human remains are encountered during permitted activities, all work shall stop immediately and the proper authorities notified in accordance with Section 872.05, *Florida Statutes*.

4. If delays will cause project completion to extend beyond the expiration date of this permit, the permittee shall submit to the Department a request to extend the expiration date of this permit including the appropriate processing fee. This request shall specify the reasons for the delay and shall be submitted to the Department for approval prior to the expiration date of this permit. Note that no specific construction permit shall be extended so as to remain in effect longer than five years. [F.A.C. Rule 62-555.536(4)]. {OPTIONAL}

5. In accordance with General Condition #11 of this permit, this permit is transferable only upon Department approval. Persons proposing to transfer this permit must apply jointly for a transfer of the permit within 30 days after the sale or legal transfer of ownership of the permitted project that has not been cleared for service by the Department using form, 62-555.900(8), Application for Transfer of a PWS Construction Permit along with the appropriate fee. [F.A.C. Rule 62-555.536(5)]

6. This permit satisfies Drinking Water permitting requirements only and does not authorize construction or operation of this facility prior to obtaining all other necessary permits from other program areas within the Department, or required permits from other state, federal, or local agencies.

7. If gasoline contamination is found at the construction site, work shall be stopped and the proper authorities notified. With the approval of the Department, ductile iron pipe and fittings, and solvent resistant gaskets materials shall be used in the contaminated area. The ductile pipe shall be used in the contaminated area. The ductile iron pipe shall extend 100 feet beyond any solvent noted. Any contaminated soil that is excavated shall be placed on an impermeable mat, covered with waterproof covering, and held for disposal. If the site cannot be properly cleaned, then consultation with the Department is necessary prior to continuing with the project construction.

8. This permit does not constitute approval of construction on jurisdictional wetland areas; therefore such approval must be obtained separately from the Water Management District or from DEP ERP Section, as applicable, Permittee shall provide a copy of the permit approval to the Department if water main installation involves activities on wetlands.

9. Permittee shall ensure that the well and drinking water treatment facilities will be protected to prevent tampering, vandalism, and sabotage as required by Rule 62-555.315(1) & 62-555.320(5), F.A.C.

C. Construction Standards

1. All products, including paints, which shall come into contact with potable water, either directly or indirectly, shall conform with National Sanitation Foundation (NSF) International, Water Chemicals Codex, Food Chemicals Codex, American Water Works Association (AWWA) Standards and the Food and Drug Administration, as provided in Rule 62-555.320(3), F.A.C.
2. Water supply facilities, including mains, pipe, fittings, valves, fire hydrants and other materials shall be installed in accordance with the latest applicable AWWA Standards and Department rules and regulations. The system shall be pressure and leak tested in accordance with AWWA Standard C600 C603, or C605, as applicable, and disinfected in accordance with AWWA Standard C651-653, as well as in accordance with Rule 62-555.340, F.A.C.

3. The installation or repairs of any public water system, or any plumbing in residential or nonresidential facilities providing water for human consumption, which is connected to a public water system shall be lead free in accordance with Rule 62-555.322, F.A.C.

4. When any existing asbestos cement (AC) pipes are replaced under this permit, the permittee shall do so in accordance with the applicable rules of Federal Asbestos Regulation and Florida DEP requirements. For specific requirements applicable to AC pipes, the permittee should contact the Air and Waste Management section managers prior to commencing any such activities at 813.470.5700. Please be aware that a notification is required to be submitted to the Department for a regulated project.

5. Setback distances between potable water wells and sanitary hazards shall be in accordance with 62-555.312, F.A.C. Reclaimed water land application areas must not be located within the setback distance from potable water supply wells established in Chapter 62-610, F.A.C.

6. The new or altered aboveground piping at the drinking water treatment plant shall be color coded and labeled as recommended in Section 2.14 of “Recommended Standards for Water Works, 1997 Edition”. [F.A.C. Rule 62-555.320(10)]

7. Permittee shall ensure that there shall be no cross-connection with any non-potable water source in accordance with Rule 62-555.360, F.A.C.

D. Operational Requirements

1. The facility has been classified as a Category V, Class C water treatment plant. Accordingly, the lead or chief operator must be Class C or higher. Proof of staffing by a Class C or higher operator for [6 hours/day for 5 days/week and one visit on each weekend day] must be provided. [F.A.C. Rule 62-699.310]

2. The supplier of water shall operate and maintain the public water system so as to comply with applicable standards in F.A.C. Rule 62-550 and 62-555.350.

3. The permittee shall provide an operation and maintenance manual for the new or altered treatment facilities to fulfill the requirements under subsection 62-555.350(13), F.A.C. The manual shall contain operation and control procedures, and preventative maintenance and repair procedures, for all plant equipment and shall be made available for reference at the plant or at a convenient location near the plant. Bound and indexed equipment manufacturer manuals shall be considered sufficient to meet the requirements of the subsection.

4. The permittee shall submit a monthly operations report (MOR) DEP Form 62-555.900(2), to the Department no later than the tenth of each succeeding month.

5. The permittee shall have complete record drawings produced for the project in accordance with Rule 62-555.530(4), F.A.C.

6. The permittee or suppliers of water shall telephone the State Warning Point (SWP), at 1-800-320-0519 immediately (i.e., within two hours) after discovery of any actual or suspected sabotage or security breach, or any suspicious incident, involving a public water system in accordance with the F.A.C. Rule 62-555.350(10).

E. Monitoring Provisions

1. Permittee shall follow the guidelines of Chapters 62-550, 62-555, and 62-560, F.A.C., regarding public drinking water system standards, monitoring, reporting, permitting, construction, and operation.

   This facility is a Community Water System as defined in F.A.C. Rule 62-550.200(12) and shall comply with the applicable chemical, radiological, lead and copper, and bacteriological monitoring requirements of F.A.C. Rule 62-550. Such requirements shall be initiated within the quarter that the water treatment facility is placed into service (i.e. January—March or April—June, the preceding are examples of quarters) and the results submitted to the Department.

2. The water treatment plant shall maintain throughout the distribution system a minimum continuous and effective free chlorine residual of 0.2 mg/l or its equivalent. A minimum system pressure of 20 psi must be maintained throughout the system. Also, safety equipment shall be provided and located outside of any chlorine room.

3. To address copper pipe corrosion control and potential black water issues, permittee shall collect at least one sample of raw water from each new well in accordance with F.A.C. Rule 62-555.315(5). The sample shall be analyzed for alkalinity, dissolved iron, dissolved oxygen (D.O.), pH, total sulfide, and turbidity, and the results shall be submitted to the Department.

F. Clearance Requirements

1. The permittee must instruct the engineer of record to request system clearance from the Department within sixty (60) days of completion of construction, testing and disinfecting the system. Bacteriological test results shall be considered unacceptable if the test were completed more than 60 days before the Department received the results. [F.A.C. Rule 62-555.340(2)(c)]

   Permitted construction or alteration of a public water system may not be placed into service until a letter of clearance has been issued by this Department. [F.A.C. Rule 62-555.345]

2. Prior to placing this project into service, Permittee shall submit, at a minimum, all of the following to the Department for evaluation and approval for operation, as provided in Rules 62-555.340 and 62-555.345, F.A.C.:

   a. the engineer's *Certification of Construction Completion and Request for Clearance to Place Permitted PWS Components Into Operation* {DEP Form 62-555.900(9)};

   b. certified record drawings, if there are any changes noted for the permitted project.

   c. copy of a satisfactory pressure test of the process piping performed in accordance with AWWA Standards. [F.A.C. Rule 62-555.320(21)(a)(1)]

   d. two consecutive days of satisfactory distribution bacteriological analytical results.

   e. 10 satisfactory bacteriological analysis results performed on the raw water to be taken 10 consecutive weekdays, or taken twice a day, 6 hours apart for 5 consecutive weekdays for new well locations;

   f. 2 satisfactory bacteriological analysis results performed on the raw water each taken on a separate weekday and taken at least 6 hours apart from the other sample for locations with well replacement.

3. The new facilities shall be cleaned, disinfected, and bacteriologically cleared in accordance with Chapter 62-555, F.A.C. The bacteriological clearance data representative of the storage tank (two samples on consecutive days), the well discharge piping and distribution system and the untreated well water (two samples per day for 5 consecutive days collected at least six hours apart) shall be submitted to the Department with the engineer's certification of construction completion. [Section 62-555.340 and 62-555.315(6)(b), F.A.C.]

In order to facilitate the issuance of a letter of clearance, the Department requests that all of the above information be submitted as one package.

Executed in Polk County, Florida

FLORIDA DEPARTMENT OF HEALTH IN POLK COUNTY

Gerald Robinson

Gerald Robinson, PE

Cc

LOCATION OF PUBLIC WATER SYSTEMS MAINS IN ACCORDANCE WITH F.A.C. RULE 62-555.314

Other Pipe	Horizontal Separation	Crossings (1)	Joint Spacing @ Crossings (Full Joint Centered)
Storm Sewer, Stormwater Force Main, Reclaimed Water (2)	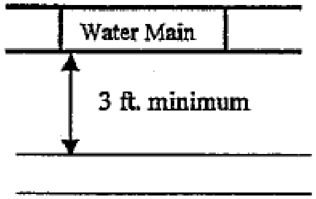 3 ft. minimum	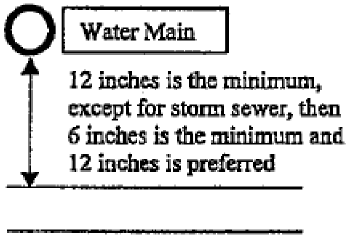 12 inches is the minimum, except for storm sewer, then 6 inches is the minimum and 12 inches is preferred	Alternate 3 ft. minimum 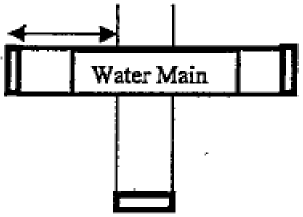
Vacuum Sanitary Sewer	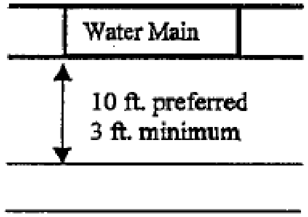 10 ft. preferred 3 ft. minimum	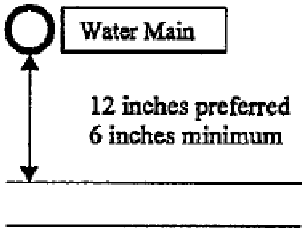 12 inches preferred 6 inches minimum	Alternate 3 ft. minimum 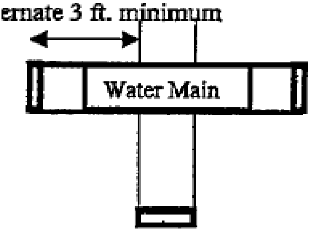
Gravity or Pressure Sanitary Sewer, Sanitary Sewer Force Main, Reclaimed Water (4)	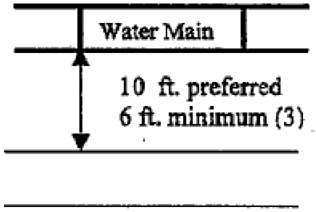 10 ft. preferred 6 ft. minimum (3)	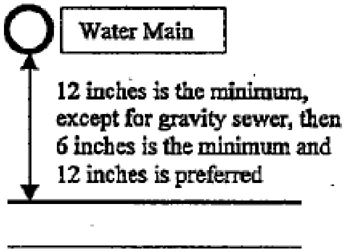 12 inches is the minimum, except for gravity sewer, then 6 inches is the minimum and 12 inches is preferred	Alternate 6 ft. minimum 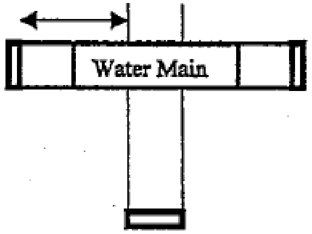
On-Site Sewage Treatment & Disposal System	10 ft. minimum	---	---

(1) Water main should cross above other pipe. When water main must be below other pipe, the minimum separation is 12 inches.
(2) Reclaimed water regulated under Part III of Chapter 62-610, F.A.C.
(3) 3 ft. for gravity sanitary sewer where the bottom of the water main is laid at least 6 inches above the top of the gravity sanitary sewer.
(4) Reclaimed water not regulated under Part III of Chapter 62-610, F.A.C.

Disclaimer – This document is provided for your convenience only. Please refer to F.A.C. Rule 62-555.314 for additional construction requirements.

POLK COUNTY

GIBSON OAKS WATER PRODUCTION FACILITY

BID SET

APPENDIX A3

GEOTECHNICAL ENGINEERING REPORT

MADRID ENGINEERING GROUP, INC.

2030 State Road 60 E *Ph: (863) 533-9007*
Bartow FL 33830-4268 *Fax: (863) 533-8997*

December 14, 2017

Carollo Engineers, Inc.
200 E. Robinson St., Suite 1400
Orlando, FL 32801
Attn: Dwayne R. Kreidler

Re: Project No. 12818
Geotechnical Engineering Report
Proposed Gibson Oaks WPF
Lakeland, Florida

Dear Mr. Kreidler:

Madrid Engineering Group, Inc. (Madrid) is pleased to submit this Geotechnical Engineering report summarizing the results of our geotechnical subsurface exploration and engineering evaluation services completed for the above referenced project. The work was completed in general accordance with the authorized scope of work in our cost estimate proposal dated December 9, 2016 and provides general geotechnical recommendations regarding the proposed construction.

We appreciate the opportunity to be of service to you on this project, and look forward to working with you on future projects. If you have any questions please do not hesitate to contact us.

Sincerely,
Madrid Engineering Group, Inc. (EB 6509)

This item has been electronically signed and sealed by Kevin M. Hill, PE, FL License No. 72949 using SHA-256 authentication code on the date shown on the time stamp to the right. Printed copies of this document are not considered signed and sealed and the SHA-256 authentication code must be verified on any electronic copies.

Kevin M. Hill
I attest to the accuracy and
integrity of this document
2017.12.14 13:06:45 -05'00'

Kevin M. Hill, P.E.
Sr. Project Manager
Florida P.E. No. 72949

John E. Delashaw, P.E.
Chief Geotechnical Engineer

Attachment: Geotechnical Engineering Report

Madrid Engineering Group, Inc.

Geotechnical Engineering Report

Gibson Oaks WPF, Lakeland, Florida

Prepared for:

Carollo Engineers, Inc.

Prepared by:

MADRID ENGINEERING GROUP, INC.
2030 State Road 60 East
Bartow, FL 33830
863-533-9007

Project No. 12818
December 2017

TABLE OF CONTENTS

1.0 INTRODUCTION AND PROJECT DESCRIPTION 1
  1.1 General 1
  1.2 Purpose and Scope of Work 1
  1.3 Site Location and Description 1
2.0 FIELD EXPLORATION AND LABORATORY TESTING 2
  2.1 Standard Penetration Test Borings 2
  2.2 Test Pit Excavations and Undisturbed Sample Collection 2
  2.3 Laboratory Test Results 3
3.0 SUBSURFACE CONDITIONS 4
  3.1 Soil Survey 4
  3.2 Subsurface Soil Conditions 5
  3.3 Groundwater Conditions and Seasonal High Ground Water 6
4.0 FOUNDATION ANALYSIS 7
  4.1 General 7
  4.2 Bearing Capacity and Settlement Estimates 7
5.0 CONCLUSIONS AND GENERAL RECOMMENDATIONS 10
  5.1 General Summary 10
  5.2 Soil Improvement 10
  5.3 Recommended Pavement Sections for the Access Roadway 11
  5.4 Site Preparation and Earthwork 12
    5.4.1 Stripping and Proof-Rolling 12
    5.4.2 Fill Placement and Compaction 13
    5.4.3 Shallow Excavations and Dewatering 13
  5.5 Stormwater Pond 14
  5.6 Quality Assurance 15
6.0 LIMITATIONS 15

FIGURES

Figure 1 Site Location Map
Figure 2 Topographic Map
Figure 3 Boring Location Plan
Figure 4 NRCS Soil Survey Map

APPENDICES

Appendix A Test Pit and Soil Boring Logs
Appendix B Laboratory Test Results
Appendix C Summary of Settlement Analysis (Table 1) & Bearing Capacity Chart

1.0 INTRODUCTION AND PROJECT DESCRIPTION

1.1 General

Madrid Engineering Group (Madrid) is pleased to submit this report summarizing the results from our subsurface soil exploration and geotechnical engineering evaluation for the proposed improvements at the Gibson Oaks Water Production Facility (WPF) at 8521 Tom Costine Road in Lakeland, Florida. The approximate site location is shown on **Figure 1, Site Location Map**. This report summarizes the results of our exploration and geotechnical evaluation for the proposed design and construction of structures (including a 1MG water storage tank), stormwater pond, and associated paved access drive with a parking area. Our conclusions and recommendations are based on the results of our field exploration, laboratory tests, and appropriate engineering analyses.

The water storage tank is proposed to be 95 feet in diameter and will have a maximum interior water column height of about 19 feet. The proposed tank location is on relatively level ground (surveyed existing ground surface elevations provided by Carollo [Client] range from about 130 to 131 feet). The tank structure foundation will likely be a monolithic concrete slab-on-grade with a thickened edge (ring foundation). Based on a water height of 19 feet and estimated up to 1 foot of fill along with minimal structure and slab load applied across the tank floor area, we have estimated a maximum tank product floor load of about 1,600 pounds per square foot (psf). The maximum allowable settlement or differential settlement tolerance was not provided to Madrid at the time of this report.

1.2 Purpose and Scope of Work

The purpose of this investigation was to provide an evaluation of the existing subsurface conditions at the project site, to identify constraints or limitations (to the extent possible based on limited explorations) that the subsurface conditions may impose on the planned construction and develop recommendations for site preparation, subgrade evaluation and shallow foundation design. The scope of work included review of existing geological data, a field exploration and laboratory testing program, engineering analyses for bearing capacity and settlement, and general site development and geotechnical design recommendations regarding the proposed construction summarized in this final report.

1.3 Site Location and Description

The subject property is located approximately 2.1 miles northeast of the intersection of US Highway 98 and Marcum Road, at the location shown on **Figure 1.** Specifically, the property is located in Section 7, Township 27 South, Range 24 East in Polk County, Florida. The ground surface on the property is relatively flat and level with ground surface elevations ranging from about 128 to 134 feet above mean sea level (msl). There is a wetland at slightly lower elevation along the southeast border of the property. The subject property is currently mostly used for pasture with a house in the southwestern portion of the property. The property contains a few mature trees, mostly in the northwest portion of the property.

2.0 FIELD EXPLORATION AND LABORATORY TESTING

2.1 Standard Penetration Test Borings

Madrid explored subsurface conditions at the site on November 16 and 17, 2017 by drilling 12 Standard Penetration Test (SPT) borings designated SPT-1 through SPT-12 using track mounted drilling equipment, completing 8 hand auger borings (HA-1 through HA-8) and excavating two shallow test pits (TP-1 and TP-2). The borings were advanced to the following depths below the existing ground surface (bgs):

- 60 feet for tank center (SPT-1) and 50 feet for tank perimeter (SPT-2 through SPT-4)
- 25 feet for the Operations Building (SPT-8 and SPT-9)
- 20 feet for other structures (SPT-5, SPT-6, SPT-7 and SPT-12)
- 15 feet for stormwater pond (SPT-10 and SPT-11)
- 5 to 6 feet for access drive (HA-1 through HA-8)

For the SPT borings, disturbed samples were obtained using a split-spoon sampler in general accordance with ASTM Specification D 1586, using a 1.4-inch I.D. split-spoon sampler driven with a 140-pound slide hammer falling a distance of 30 inches. The hand auger borings were completed using a bucket auger in general accordance with ASTM D 1452. For all borings, an engineering technician familiar with soil classification and field evaluations logged the borings in the field and placed samples in sealed containers and returned them to Madrid's laboratory for further classification. Upon completion, the boreholes were backfilled in general accordance with industry standards. Soil samples will be kept for a period of 6 months after the date of this report unless otherwise requested.

The boring location for the tank center (SPT-1) was located by a surveyor prior to Madrid arriving at the site. The remaining tank borings were measured from the center boring location. The other borings were located using a hand-held GPS unit. The approximate boring locations, overlain on a copy of the plans, are shown on **Figure 3, Boring Location Plan**. Individual boring logs are provided in **Appendix A**.

2.2 Test Pit Excavations and Undisturbed Sample Collection

Test Pit TP-1 was located near SPT-10 and Test Pit TP-2 was located near SPT-11 within the proposed stormwater pond, and were completed to a depth of 2 feet below ground surface (bgs). At the base of each test pit, 6-inch long vertical and horizontal Shelby tubes (relatively undisturbed, thin-walled samples) were collected for later permeability testing in our soils laboratory. Possible historical indicators of a Seasonal High Water Table (SHWT) were observed in the exposed side walls of the test pits at a depth of 1.5 feet in TP-1 and 1.0 feet in TP-2. The Shelby tube samples collected were relatively clean sand (SP). Test Pit logs are included with the soil borings in **Appendix A**.

2.3 Laboratory Test Results

Soil samples collected from the field program were returned to our laboratory for further classification and testing to confirm field classifications and help evaluate engineering properties of the materials encountered. Laboratory testing of selected representative samples was performed in general accordance with ASTM standards.

Laboratory tests for natural water content (ASTM D2216), percent passing the No. 200 sieve (ASTM D1140), organic content (ASTM D2974), and Atterberg limits (ASTM D 4318) were performed on selected samples from the SPT borings and Shelby tube samples to verify the visual and tactile soil classifications. Laboratory testing for Constant Head Permeability (ASTM D2434) was completed on the horizontal and vertical Shelby tube samples obtained at a depth of 2 to 2.5 feet bgs within the test pits. Laboratory test reports are included in **Appendix B**. A summary of the test results is presented below.

- The laboratory testing indicates variable fines contents in sediments at depths from 1 to 45 feet bgs in the hand auger and SPT borings as well as from Shelby tube samples. Percent passing the No. 200 sieve for samples tested ranges from the about 1 to 86 percent.

- The laboratory testing for organic content indicates trace amounts of organic sediments from 1 to 15 feet bgs in borings HA-1, SPT-2, SPT-4 and SPT-11. Organic contents in these samples ranged from 1.3 to 3 percent.

- Atterberg Limits Determination testing was completed on samples from borings SPT-1, SPT-2 and SPT-3. For these samples, the Liquid Limit ranged from 27 to 72, the Plastic Limit ranged from 15 to 27, and the Plasticity Index ranged from 0 to 56. All of these samples would classify as Highly-Plastic Clay (CH) except for the 28.5 to 30-foot sample from SPT-3 which is a silty sand (SM).

Laboratory Permeability Test Results

Test Pit #	Orientation	Percent Passing #200 Sieve	Average Permeability (in/hr)	Water Table Depth (in)	Estimated SHWT Depth (in)
TP-1	Horizontal	1.4	14.4	48	18
	Vertical	4.7	2.3		
TP-2	Horizontal	2.2	3.1	48	12
	Vertical	2.7	7.2		

3.0 SUBSURFACE CONDITIONS

3.1 Soil Survey

The Soil Conservation Service (SCS) Soil Survey reports provide a general description of the typical shallow soil strata (about 7 feet) encountered within each particular soil mapping unit and reports typical depth to seasonal high water levels. The SCS defines seasonal high water as “a zone of saturation at the highest average depth during the wettest season that is at least six inches thick, persists for more than a few weeks, and is within six feet of the soil surface.” The SCS Soil Survey for Polk County indicates two (2) primary mapped soil units are depicted on the property. These mapped units include mostly **Sparr sand, 0 to 5 percent slopes** (map symbol 14, in most of the structure and roadway areas) and **Smyrna and Myakka fine sands** (map symbol 17, mostly in the pond areas), as shown on **Figure 4**. Also, there is a small area of **Tavares fine sand, 0 to 5 percent slopes** (map symbol 15) at the site entrance at the northwest corner of the property. We also note that along the southeast property line (near the southern edge of the proposed pond) there may be very small areas with Hontoon Muck (map symbol 35).

According to the USDA – NRCS, **Sparr Sand** *is poorly drained soil in areas of seasonally wet uplands and knolls on flatwoods. Areas of this soil range from about 10 to 40 acres. Slopes are smooth. Typically, this soil has a dark gray sand surface layer about 8 inches thick. The subsurface layer is brown to very pale brown sand to a depth of about 57 inches. The subsoil is sandy clay loam to a depth of at least 80 inches. It is very pale brown in the upper part, yellowish brown in the next part, and light gray in the lower part. This Sparr soil has a seasonal high water table at a depth of 20 to 40 inches for 1 to 4 months in most years. The available water capacity is low. Wetness is a severe limitation affecting septic tank absorption fields, sewage lagoons, and sanitary landfills and a moderate limitation affecting sites for dwellings without basements, small commercial buildings, and local roads and streets.* This map unit is in the central and southwestern quadrant of the property (this generally includes most of the project area, except for the northern and eastern portions of access roadways).

Also according to the USDA – NRCS, these **Smyrna and Myakka soils** are poorly drained soils in broad areas on flatwoods. The proportion of Smyrna versus Myakka varies within this area. Areas of each soil are large enough to be mapped separately, but due to present use at the time of printing, were mapped as one unit. Typically, the Smyrna soil has a black fine sand surface layer about 4 inches thick. The subsurface layer is gray fine sand to a depth of about 12 inches. The subsoil is dark brown and brown fine sand to a depth of about 25 inches. Below that is very pale brown fine sand to a depth of about 42 inches and very dark brown fine sand to a depth of about 48 inches. The underlying material is brown and light brownish gray fine sand to a depth of at least 80 inches. Typically, the Myakka soil has a very dark gray fine sand surface layer about 7 inches thick. The subsurface layer is gray fine sand to a depth of about 25 inches. The subsoil is fine sand to a depth of about 36 inches and black in the upper part and dark brown in the lower part. The underlying material is yellowish brown fine sand to a depth of at least 80 inches. The Smyrna and Myakka soils have a seasonal high water table within 12 inches of the surface for 1 to 4 months in most years. The available water capacity is low. Permeability is moderate or moderately rapid in the subsoil.

The USDA – NRCS reports that **Tavares fine sand**, 0 to 5 percent slopes is a moderately well drained soil on broad uplands and knolls on flatwoods. Areas of this soil range from about 10 to 80 acres. Slopes are smooth to convex. Typically, this soil has a dark grayish brown fine sand surface layer about 8 inches thick. The underlying material to a depth of at least 80 inches is light yellowish brown fine sand that grades to very pale brown. This Tavares soil has a seasonal high water table at a depth of 40 to 80 inches for several months in most years. The available water capacity is very low. Permeability is rapid or very rapid.

Finally, Hontoon muck is described as very poorly drained soil in swamps and marshes. Slopes are dominantly less than 1 percent but range from 0 to 2 percent. Typically, this soil is black muck to a depth of about 11 inches and dark brown muck to a depth of about 75 inches. The underlying material is black sandy loam to a depth of at least 80 inches. This Hontoon soil has a seasonal high water table that is at or above the surface except during extended dry periods. The available water capacity is very high. Permeability is rapid. This soil has very severe limitations affecting urban and recreational uses because of the ponding and low strength.

3.2 Subsurface Soil Conditions

In general, the SPT borings for the tank (SPT-1 through SPT-4) encountered mostly loose to medium dense fine sand or slightly silty sand (SP, SP-SM, SM) from the ground surface to depths ranging from approximately 17 to 22 feet bgs. This was underlain by interbedded layers of very loose to dense variably-clayey sand (SP-SC, SC, SC/CL) and soft to very stiff (but typically firm) highly plastic clay (CH). In boring SPT-1 at the tank center, there was very dense limestone with interbedded very dense clayey sand from approximately 47 feet bgs to the bottom of the boring at 60 feet bgs. We note that the clay depth, density and thickness were inconsistent between the four tank borings which will lead to varying settlement performance across the tank footprint.

In general, the SPT borings for the other structures (SPT-5, SPT-6, SPT-7, SPT-8, SPT-9 and SPT-12) encountered very loose to medium dense fine sand (SP) from the ground surface to the termination depths that ranged from 20 to 25 feet bgs. These soils appear to be suitable for reuse as fill in other areas of the site.

The SPT boring for roadway (HA-1 through HA-8) encountered relatively clean fine sand (SP) except for slightly silty sand with trace (or slightly more than trace) organics from 1 to 2 feet bgs in boring HA-1.

The SPT borings at the pond (SPT-10 and SPT-11) encountered very loose to loose (but typically loose) fine sand (SP) except for loose to medium dense slightly silty sand with trace organics (SP-SM) between approximately 3 and 9 feet bgs in boring SPT-11.

Limestone was only encountered in boring SPT-1 beginning at a depth of about 47 feet bgs in that boring. The only boring with a reported loss of circulation occurred in boring SPT-3 at a depth of 28.5 feet bgs and the fluid loss was reported at 40 percent. The soil boring logs are presented in **Appendix A**. The soil profiles described above are based on our interpretation of subsurface conditions encountered at the boring locations only. Boundaries between soil layers shown on the Boring Profiles are approximate and for illustration purposes only. Variations in soil conditions in both horizontal and vertical directions different from those presented may exist between boring locations. Elevations shown on the boring logs were obtained using estimated boring locations overlaid on a survey topograph provided by Carollo. No surveying was performed by Madrid.

3.3 Groundwater Conditions and Seasonal High Ground Water

The depth to the surficial groundwater table in the soil borings ranged from 1.7 to 5 feet bgs. Based off of estimated ground surface elevations at the boring locations, this equates to elevations ranging from 125 feet (at SPT-11 for the pond) to 130.8 feet (at HA-1 at the northern portion of the access road); this corresponds well with the site grades that generally fall from highest at the northwest to lowest along the southeast boundary. The water table was most often encountered between 2 and 4 feet bgs across the site. Seasonal fluctuations in the groundwater level should be anticipated due to variations in rainfall.

With respect to the seasonal high water table (SHWT), the NRCS Soil Survey for the majority of the site reports the SHWT at a depth of 20 to 40 inches (Sparr soil) for most of the site and a SHWT within 12 inches of the surface for Smyrna and Myakka soils, which are mostly in the vicinity of the proposed pond. The Hontoon muck, if present, appears to be along the south edge of the proposed pond and has a SHWT at or above the ground surface. The SHWT for the Tavares soil (near the site entrance only) is reported to be between 40 and 80 inches bgs. Historical indicators of a SHWT appeared to be at a depth of about 18 inches at Test Pit TP-1 (adjacent to SPT-10) which equates to elevation 129 feet and at a depth of about 12 inches at Test Pit TP-2 (adjacent to SPT-11) which equates to elevation 128 feet. A SHWT of about 2 feet bgs appears to be appropriate for design purposes for the various structures. It should be noted that SHWT estimates are approximate and the designer should use a conservative SHWT estimate as appropriate for the particular analyses. Fill may be used to elevate foundations and/or roadway base material to a particular separation distance from the water table, as needed.

4.0 FOUNDATION ANALYSIS

4.1 General

In accordance with our scope of work, an evaluation of shallow foundations was completed. The following discussions and recommendations are based on our understanding of the proposed development, the data obtained from the site exploration, experience with similar conditions, and generally accepted principles and practices of geotechnical engineering. Based on the results of the exploration completed at the site and our professional opinion, the proposed site appears suitable for the proposed storage tank on a shallow foundation provided settlements are taken into consideration by the design team. The site is suitable for other structures structures placed on slabs-on-grade and the access drive, provided the recommendations presented herein are adhered to. Clay soils at depth below the proposed tank location are likely to cause excessive long-term settlement and differential settlement (for the tank only) such that soil improvement is recommended in order to achieve more uniform and improved settlement performance, as discussed subsequently.

4.2 Bearing Capacity and Settlement Estimates

Tank Structure

The required allowable bearing pressure for the tank and other structures was not provided to Madrid at the time of this report. Based on this information and the soil data obtained, we have provided a chart (in **Appendix C**) of allowable bearing capacity/pressure for the thickened edge (ring) footing around the perimeter of the tank with a range of about 2,200 to 3,350 psf depending on the footing width and footing embedment selected. Any combination at or below the selected line is valid for design purposes. This chart was completed at a safety factor of 3. The soil directly beneath the footing is assumed to be compacted per the recommendations discussed subsequently. Although design values for 12-inch embedment are presented, a minimum embedment of 18-inches is more favorable and is recommended.

The weight of water column was used to calculate an approximate applied bearing pressure of about 1,200 psf when the tank is full of water. A total average loading of about 1,600 psf was used for our settlement analysis to account for additional loading from the structure distributed across the footprint and up to 1 foot of additional fill if needed. Settlement predictions under the design load were based on equivalent parameters derived from empirical correlations with SPT blow count data, soil type, and laboratory test results. No site specific compressibility testing was performed. Settlement analyses were performed using conventional closed-form approximate solutions for conditions encountered in each of the soil borings. Settlement estimates were performed assuming subsurface conditions encountered in each of the borings including one center and three perimeter borings. Results of the settlement analyses are summarized in **Table 1** in **Appendix C**. It should be noted that these settlement amounts tend to be conservative and it is likely that the actual settlement will be slightly less. We recommend that the Engineer monitor settlement of the tank floor during first filling and that settlement be checked periodically over the first year.

As shown in **Table 1**, we estimate total settlement (greatest settlement) of up to 10.7 inches at the southeast edge of the tank and ranging from about 5.5 to 10.7 inches at the edges, depending on the edge boring used in the analysis. The estimated center settlement is 5.6 inches.

The analyses result in estimated maximum center-to-edge differential settlements on the order of about 0.8 inch for immediate settlement and 5.7 inches for long-term settlement. The overall tank settlement would be about 5.5 inches. It is noted that the boring profiles varied significantly over relatively short distances. Although for immediate settlement, it will be imperative that the compaction effort at the surface is properly performed; however, long-term clay settlement will be greater than the immediate settlement.

At this site, it is anticipated that about 15 to 40 percent of the total settlement will occur rapidly, generally as the load is applied. The remaining clayey soil settlements are expected to occur more slowly in the clayey sands and particularly in the clays found at depth. Based on our experience on other projects in Central Florida, we often experience lower total and increased rates of consolidation settlement over the predictions based on correlations because the sandy nature of the clayey soils as well as interbedded sand lenses often present tends to allow more rapid drainage of excess pore pressures. This would typically mean that most of the long term settlement should occur in a period of a few to several months (compared with the slower consolidation of a thick clay layer that can take years). However, the wide differences in settlement estimates, particularly along the edges, is due to variances in clay thickness, density and depth between the four borings completed at the tank site. Clay tends to settle much more slowly than other soils, but total settlement can be much greater than other soils as well due to water slowly being squeezed from the soil over time. Although clayey sand may settle over the course of several months, clay settlement may take more than a year to complete under normal loading conditions. The time rate of consolidation (coefficient of consolidation) is a highly variable parameter and is often sample-specific rather than site specific.

Even with recommended soil improvement, as discussed below, settlement must be considered in the tank and appurtenant works design. Flexible connections are recommended. The sands will experience elastic behavior; meaning the ground will move up and down as load is applied and removed (e.g. as tank empties and fills) and clays will settle slowly over a long period of time after full loading occurs.

It should be noted that given the potential variability of subsurface conditions, limited field and laboratory data, and limitations of the numerical model, settlement predictions developed by Madrid are considered approximate and are likely to be slightly less than the amount predicted using the numerical model. Actual settlements observed during loading will depend on variations in subsurface conditions across the tank footprint, final tank design, construction details, and loading rate. Because settlement potential at this site is more of a potential concern than we often encounter, consideration should be given to the collection of site specific data for a more refined evaluation of settlement magnitude and rate. This can be done by collection of undisturbed samples and laboratory consolidation testing.

Other Structures

The various proposed minor structures are assumed to have continuous (monolithic or strip) concrete footings and the same chart (in **Appendix C**) may be used for the allowable bearing pressure, width and embedment of the perimeter footing for design purposes. We anticipate settlement for minor structures to be less than 1 inch with less than 0.5 inch differential settlement across the building area, providing the subgrade is compacted per our recommendations (see **Section 5.4** below). Most of the settlement should occur quickly, during construction, as the surficial soils are very sandy and loads will not influence the deeper clayey soils that are affected by the larger tank. Similarly, any other small slabs-on-grade should experience minimal settlement that will occur during construction with proper compaction of the subgrade. A modulus of subgrade reaction of 100 pci can be used for slab-on-grade design.

5.0 CONCLUSIONS AND GENERAL RECOMMENDATIONS

5.1 General Summary

Soil conditions are suitable for the support of the proposed storage tank and other structures on a shallow foundation system; however, variable depth, density and thickness of clay (CH) soils in the subsurface are likely to cause an unacceptable amount of settlement and/or differential settlement. Soil improvement is recommended at the tank location prior to construction. For the remainder of the site, generally loose fine sand (SP) was encountered near the surface across the entire site and the subgrade will need to be improved as described below. Minimal settlement (less than 1 inch) for structures other than the tank is anticipated and most of the settlement should occur during construction. Compaction effort will also be important for the long-term performance of the access roadway/pavement areas. For the pond, loose surficial sand and slightly silty sands should be acceptable for stormwater design and no confining layers were noted in the shallow soil at the pond location. Permeability rates at a depth of 2 feet bgs (from laboratory tests) were found to be variable and ranged from about 2 and 14 inches per hour (4 to 28 ft/day) at the pond location.

5.2 Soil Improvement

As previously noted, settlement at the tank location is anticipated to be excessive and occurring over the course of a year or more due to clay soils at depth. Multiple options are available to reduce the anticipated settlement and the following appear to be the most cost-effective:

1. Surcharge or pre-loading. This involves placing a load at the proposed tank site to induce as much of the clay settlement as practical prior to tank construction. The most limiting factor is likely to be the proposed construction schedule. If time allows, excavation of the pond as early as possible may supply enough soil to pre-load or even surcharge (overload) the tank site. With a typical soil weight of 100 to 110 pcf, 15 feet of soil over the entire tank footprint would simulate the design loads and should cause settlement to begin. If the soil height is increased, settlement would be more rapid, thus decreasing the time necessary to induce soil settlement. Monitoring of settlement plates (surveyed in place) would be required to determine how much settlement has occurred and when to remove the surcharge load. The amount of settlement obtained from their

process is controlled by the height of the surcharge and length of time the surcharge is in place. Once the surcharge is removed, normal construction can commence and reduced settlement of the structure should occur. The surcharge option with wick drains added is our recommendation. The amount of time required for the surcharge to remain depends on several factors as well. Again, site specific consolidation data is not available but would help us to better evaluate both time and magnitude of settlement. Pre-loading could reduce consolidation time from over a year, possibly multiple years, to several months. A combination of surcharging with wick drain installation could reduce surcharge time to 30 to 45 days.

2. Soil improvement using stone columns. Stone columns are vertical columns of stone, usually on the order of 30 to 42-inch diameter, vibrated into the ground. These improve settlement performance by several ways including: strengthening existing soils; transfer of some load into competent soils below compressible layers; increasing rate of settlement by creating shorter seepage paths laterally to the columns and then up to the surface in rapid draining stone. All of these benefits will reduce settlement totals, speed the process and provide more uniform settlement performance. This is a very viable option but would add more cost than surcharging.

3. Loading can be reduced by a variety of methods. The tank volume can be reduced or split into multiple smaller tanks. The tank can be embedded a few feet deeper than originally proposed (may not be possible depending on the hydraulic requirements of the piping, pumps, etc.). Deeper embedment involves removing soil, which reduces the net weight of the new loads (about 7% reduction per foot of embedment depth for this example). Soil may also be over-excavated by several feet and replaced with lightweight structural material to reduce the net new loading.

4. Change the tank location to a portion of the site with less clay in the subsurface (would require more borings to locate the best site and this may require changes to the proposed pump system).

5.3 Recommended Pavement Sections for the Access Roadway

Traffic loading, service level or design life information was not provided for the access road/pavement areas. Based on the field exploration and our experience, and minimum Polk County requirements for local roadways (minimum Structural Number ‘SN’ of 2.29), we recommend the following minimum section requirements for low volume flexible pavements that may see occasional heavy loads:

- 1.5” Type SP structure course (SN coefficient 0.44/in)
- 6” Crushed Limerock base course (minimum LBR 100 and compacted to 98% modified Proctor). (SN coefficient 0.18/in)
- 12” stabilized subgrade (minimum LBR 40 and compacted to 98% of modified Proctor). (SN coefficient 0.08/in)

This pavement section exceeds the County’s minimum SN and layer thickness requirements but are appropriate for this kind of facility. It should be noted that limerock is susceptible to deterioration when exposed to water for prolonged periods of time and limerock is not recommended to be used as a base material if the SHWT is within 3 feet of the bottom of the proposed base course elevation. In such circumstances, a more moisture-tolerant base such as crushed concrete or graded aggregate (of equivalent SN thickness) is recommended in place of limerock. However, if Polk County’s minimum requirements for fire truck access on local roads (SN of 3.0) are required, we recommend the following flexible pavement section:

- 1.75” Type S-1 structure course
- 8” Crushed Limerock base course (minimum LBR 100 and compacted to 98% Modified Proctor)
- 12” stabilized subgrade (minimum LBR 40 and compacted to 98% of Modified Proctor)

If compaction of the stabilized subgrade cannot be achieved due to yielding, over-excavation of very loose sand below the depth of the stabilized subgrade may be necessary and re-compacted in 6-inch lifts before replacing the stabilized subgrade.

5.4 Site Preparation and Earthwork

The following recommendations pertain to site preparation, surface compaction and regrading fill operations. Proper geotechnical engineering control should be exercised during all phases of site preparations and earthwork. These operations typically should be observed and documented by a qualified representative of the geotechnical engineer.

5.4.1 Stripping and Proof-Rolling

Prior to any construction, the site should first be stripped and cleared, including removal and disposal of all debris, trees, vegetation, asphalt and root systems. Topsoil should be stripped as necessary to remove roots and other deleterious material and may be stockpiled for later use in landscape areas. Subgrade soils within and up to at least 10 feet beyond the tank, roadway and slab footprint areas should be carefully inspected to detect possible zones of weak soils not disclosed by the subsurface investigation and methodically proof-rolled with a large, self-propelled vibratory roller imparting at least 35,000 foot-pounds dynamic force while operating at its maximum frequency or a large rubber tired front end loader with full bucket. It is noted that heavy vibratory compaction near other structures has the potential to cause damage. The proof-rolling method should be carefully evaluated by the engineer. Proof-rolling should be performed by at least six passes in each direction (e.g. N-S and E-W) and continued until the soil 12 inches below the existing surface has achieved a density of at least 98 percent of Modified Proctor Maximum Dry Density (MPMDD, ASTM D 1557). Any soft, organic or other deleterious soils encountered during the stripping and proof-rolling operation should excavated and replaced with suitable fill as described in **Section 5.4.2**. For cut areas with greater than 1 foot of cut, the proof rolling operations should be performed after the area has been cut to grade.

5.4.2 Fill Placement and Compaction

Structural fill consists of existing soils and/or earth fill placed directly beneath the bottom of shallow foundations and floor slabs, backfill material placed against walls and footings, any fill placed below the access roadway, and replacement fill material for soft soils removed during proof-rolling operations. Structural fill should consist of granular soils with not more than 12 percent fines passing the No. 200 sieve and an organic content of not more than 4 percent conforming to USCS soil types SP or SP-SM. Structural fill should be placed in lifts no greater than 12 inches in loose thickness and compacted to a dry density of not less than 98 percent of the Modified Proctor Maximum Dry Density (ASTM D 1557). Prior to construction, a minimum of two bulk samples each, representative of anticipated subgrade and fill soils, should be collected and subjected to compaction testing. Surficial natural sandy soils may be reused, but topsoil must be removed and discarded. Natural subgrade and fill soils may require moisture conditioning as necessary for adequate compaction.

Because of the consistently loose soils in the top 10 feet, we recommend that all soils within 2 feet of the tank finish floor level, whether cut or fill, be compacted to 98% of the MPMDD. This is in addition to meeting proof rolling requirements and will require over-excavation, replacement, and compaction in lifts. This will improve overall performance (reduction in overall and differential settlement) in addition to the surcharge previously described. It is noted that most of the soils excavated from this site (including from the pond) should be suitable for reuse as fill in accordance with the fill requirements stated above.

5.4.3 Shallow Excavations and Dewatering

Excavations at the site are not anticipated to exceed about six feet deep for utilities and the deepest cuts in the tank footprint and up to about 2 to 3 feet deep for footings. If very loose material is present, it should be removed to a depth not less than one foot below the originally proposed base of the excavation for structure footings (one foot for roadways) and replaced with compacted structural fill after compacting the base of the excavation. As the surficial soils at this site are typically loose, the base of all excavations shall be compacted as described in **Section 5.4.2**.

Open-cut methods appear suitable for these shallow excavations. Temporary side slopes for the open-cut excavations should be stable in the short term at slopes of one and one-half feet horizontal to one foot vertical (1.5:1 H:V). All excavations should conform to the Occupational Safety and Health Act (OSHA) requirements for Type C soils as described Federal Register 29 CFR Part 1926. Dewatering is not anticipated to be required.

5.5 Stormwater Pond

The following recommendations are provided for the design engineer to assist them with stormwater pond design. We note that variably-silty soils (SP and SP-SM) were encountered in the shallow soil at the stormwater pond area. The depth of the stormwater pond was not provided at the time of this report, but it is assumed that the pond bottom will be less than about 6 to 8 feet bgs as the water table is relatively shallow in this area. No shallow confining layers were noted at the pond location.

The proposed pond is very long and soil conditions are likely to vary across the pond. Vertical permeability rates ranged from about 2 to 7 in/hr at a depth of 2 to 2.5 feet bgs. Horizontal permeability rates ranged from about 3 to 14 in/hr at a depth of 2 feet bgs. We noted that laboratory testing revealed the permeability rates were not consistent even between horizontal and vertical samples from the same test pit. Thus, we recommend the designer choose conservative design soil parameters based on this information and their experience with similar situations. It should be noted that conditions at other locations within the pond will likely vary from those encountered at the boring/test pit locations.

Soils within the likely pond excavation interval are typically clean sand (SP) and slightly silty sand (SP-SM). These materials would classify as SELECT for use as structural fill beneath roadways. However, organics may locally occur at higher concentrations than found at the boring locations, particularly along the southeast boundary, and organic soils should not be used at structural fill but may be acceptable for use as general fill away from roadways and structures. Accordingly, most of the excavated material below the topsoil will likely be suitable for re-use as structural fill within the roadway embankment or beneath structure foundations/slabs. If site grades are raised to create a berm to retain the southeast limits of the pond, consideration of the potential for mucky soils at the base of the berm should be given. Also, depending on the berm height required, internal or toe drainage provisions may be appropriate for the design.

5.6 Quality Assurance

We recommend establishing a comprehensive quality assurance program to verify that all site preparation and foundation and pavement construction is conducted in accordance with the recommendations herein and the appropriate plans and specifications. It is strongly recommended that Madrid be retained to perform materials testing and inspection services.

As a minimum, an on-site engineering technician should monitor all stripping and grubbing to verify that all deleterious materials have been removed and should observe the proof-rolling operation to verify that the appropriate number of passes is applied to the subgrade. In-situ density tests should be conducted during filling activities and below all footings, floor slabs and pavement areas to verify that the required densities have been achieved. In-situ density values should be compared to laboratory Proctor moisture-density results for each of the different natural and fill soils encountered.

6.0 LIMITATIONS

This report has been prepared for Carollo for the proposed 1MG Ground Storage Tank and associated other improvements at the Gibson Oaks WPF. The recommendations presented herein are based on Madrid’s interpretation and understanding of site conditions and the preliminary site layout, and other information provided by the client. This report is intended for use by the designers of this project; it is not a specification document and is not intended for use as a specification but should be provided to bidders. Varying degrees of non-uniformity of the horizontal and vertical soil conditions are likely to exist between boring locations. Any variations in structure location or anticipated loading from those indicated in this report should be brought to Madrid’s attention as such changes may affect Madrid’s conclusions and recommendations. The study reported herein has been conducted in accordance with the generally accepted standards, principles and practices in the geotechnical engineering profession. No other warranty, expressed or implied, is made. Madrid is not responsible for the independent conclusions, opinions, and/or recommendations made by others based on the field investigation and laboratory testing data presented in this report.

This study is based on primarily relatively shallow exploration and is not intended to be an evaluation for sinkhole potential. This study does not include an evaluation of the environmental (ecological or hazardous/toxic material related) condition of the site and subsurface.

FIGURES

Sources: GIS Information (ESRI)

MADRID ENGINEERING GROUP, INC.

2030 State Road 60 East
Bartow, Florida 33830
863 533-9007 Fax: 863 533-8997
EB-0006509

Carollo Engineers, Inc.

FIGURE 1
Location Map
Gibson Oaks WPF Site
Lakeland, Florida

MEG Project Number
12818

Notes:

Drawn By: BJN

Checked By: JED

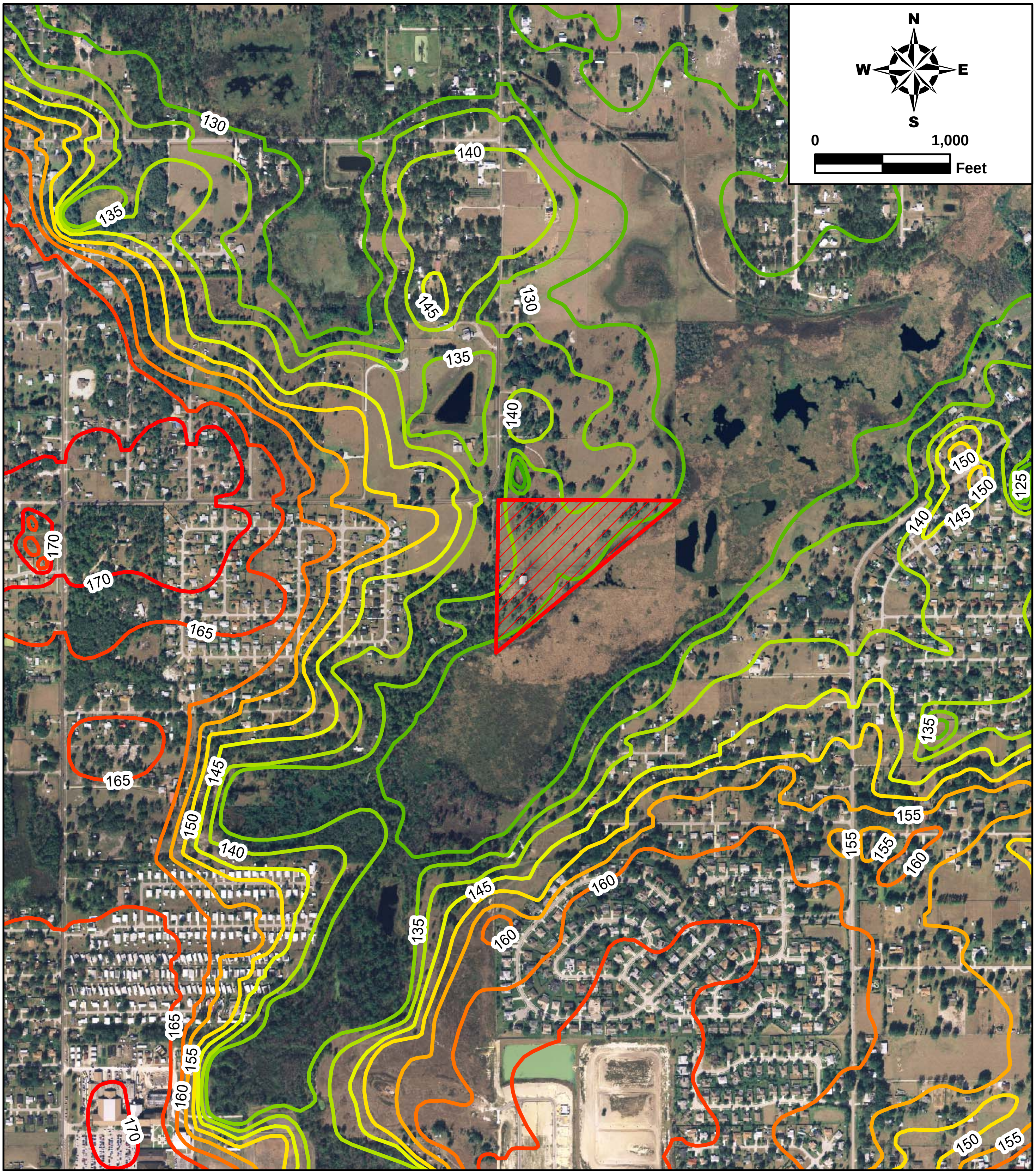

Sources: GIS Information (ESRI), (Photograph Date 2006), Topographic Information (USGS)

MADRID ENGINEERING GROUP, INC.
2030 State Road 60 East
Bartow, Florida 33830
863 533-9007 Fax: 863 533-8997
EB-0006509

Carollo Engineers, Inc.

FIGURE 2
Topographic Map
Gibson Oaks WPF Site
Lakeland, Florida

MEG Project Number
12818

Notes:

Drawn By: BJN

Checked By: JED

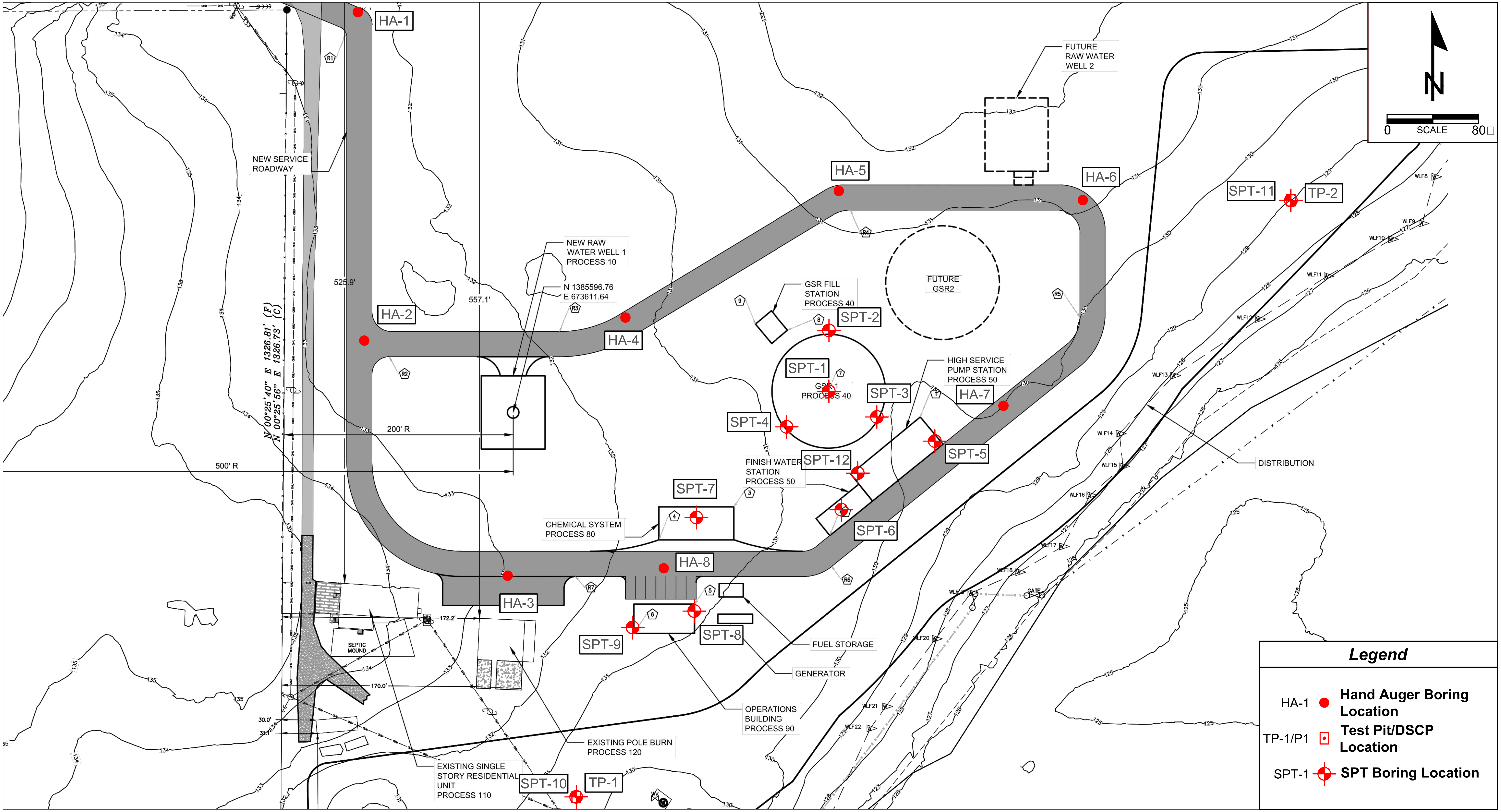

MADRID ENGINEERING GROUP, INC.
2030 State Road 60 East
Bartow, Florida 33830
863 533-9007 Fax: 863 533-8997
EB-0006509

Carollo Engineers, Inc.

FIGURE 3
Boring Location Plan
Gibson Oaks WPF Site
Lakeland, Florida

Notes:

Drawn By: TFS

Checked By: KH

MEG Project Number
12818

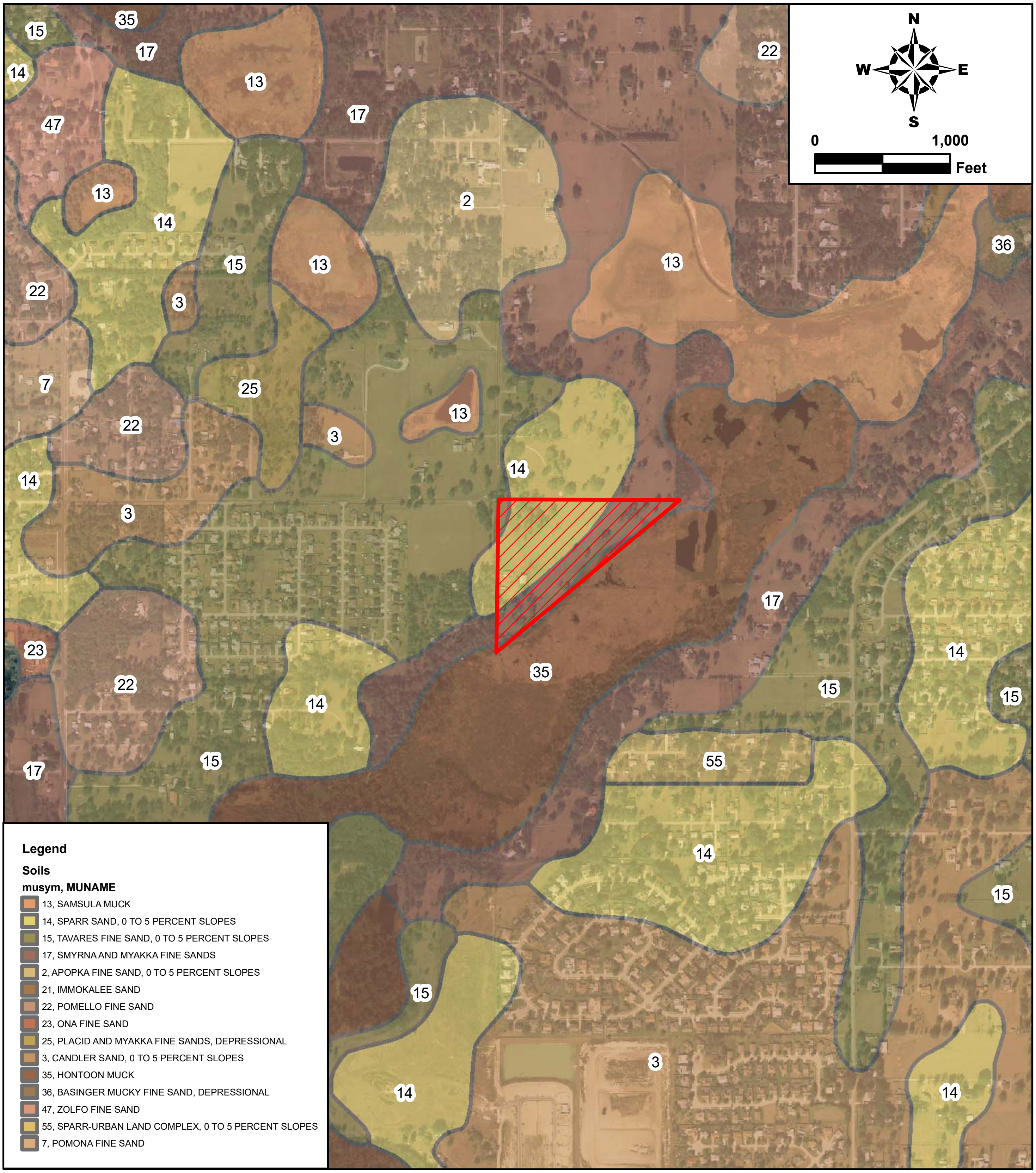

Sources: GIS Information (ESRI), (Photograph Date 2006), Soils Information (SCS/USGS)

MADRID ENGINEERING GROUP, INC.

2030 State Road 60 East
Bartow, Florida 33830
863 533-9007 Fax: 863 533-8997
EB-0006509

Carollo Engineers, Inc.

FIGURE 4
NRCS/USDA Soils Map
Gibson Oaks WPF Site
Lakeland, Florida

MEG Project Number
12818

Notes:

Drawn By: BJN

Checked By: JED

APPENDIX A

REPORT OF TEST PIT LOGS

TP-1	**Location:** Near SPT-10, SW part of pond, approx. elevation 130.5	
Depth (Inches)	**Soil Description**	**USCS Classification**
0 – 6	Light brownish gray (10YR-5/2) sand	SP
6 – 16	Gray (10YR-5/1) with light gray mottles (10YR-7/1) sand	SP
16 – 20	Light gray (10YR-7/1) with gray (10YR-5/1) mottles sand	SP
20 – 24	Dark brown (10YR-3/3) and gray (10YR-4/1) sand	SP

Water Table Depth: 48 inches (from SPT boring) **Estimated SHWT: 18 inches**

TP-2	**Location:** Near SPT-11, NE part of pond, approx. elevation 129	
Depth (Inches)	**Soil Description**	**USCS Classification**
0 – 10	Dark brown (10YR-4/1) sand	SP
10 – 24	Light gray (10YR-7/1) sand	SP

Water Table Depth: 48 inches (from SPT boring) **Estimated SHWT: 12 inches**

Depth (ft)	DESCRIPTION	Depth (ft)	Elev. (ft)	Blows	N-Value
	Dark gray sand (SP)	0		HA	HA
1	Very dark gray slightly silty sand with trace organics (SP-SM) <#200=6.5% Organic content=3.0%		∇	HA	HA
2	Dark grayish brown sand (SP)		130	HA	HA
				HA	HA
				HA	HA
		5			

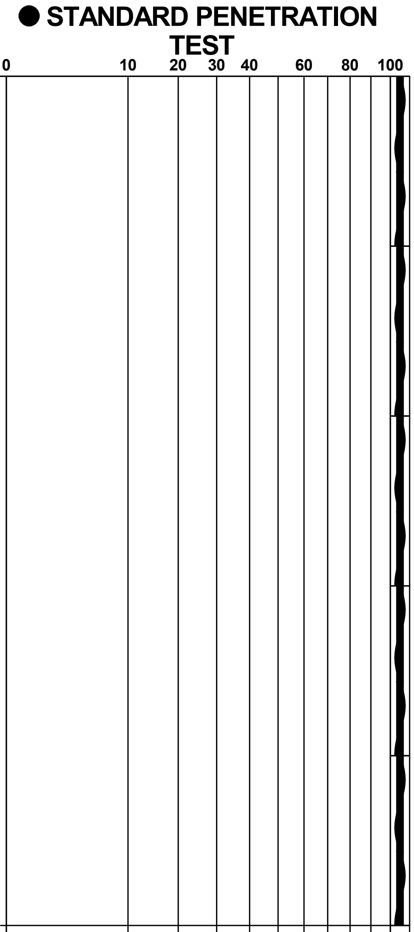

BORING LOCATION: Access road, 28.146440938°N, 81.946288696°W

BORING NUMBER	HA-01
DATE DRILLED	11/17/2017
PROJECT NUMBER	12818
PROJECT	Gibson Oaks WPF Site
PAGE 1 OF 1	

TEST BORING RECORD
Madrid Engineering Group, Inc.

REMARKS: Water table at 20".

Depth (ft)	DESCRIPTION	Depth (ft)	Elev. (ft)	Blows	N-Value	● STANDARD PENETRATION TEST 0 10 20 30 40 60 80 100
	Dark grayish brown sand (SP)	0				
				HA	HA	
				HA	HA	
			130	HA	HA	
			∇			
				HA	HA	
				HA	HA	
		5				

BORING LOCATION: Access road, 28.145651988°N, 81.946271436°W

BORING NUMBER HA-02
DATE DRILLED 11/17/2017
PROJECT NUMBER 12818
PROJECT Gibson Oaks WPF Site
PAGE 1 OF 1

TEST BORING RECORD
Madrid Engineering Group, Inc.

REMARKS: Water table at 38".

Depth (ft)	DESCRIPTION	Depth (ft)	Elev. (ft)	Blows	N-Value
	Grayish brown sand (SP)	0			
				HA	HA
				HA	HA
	White				
				HA	HA
	Very pale brown		130		
				HA	HA
			▽		
				HA	HA
		5			
				HA	HA

● STANDARD PENETRATION TEST

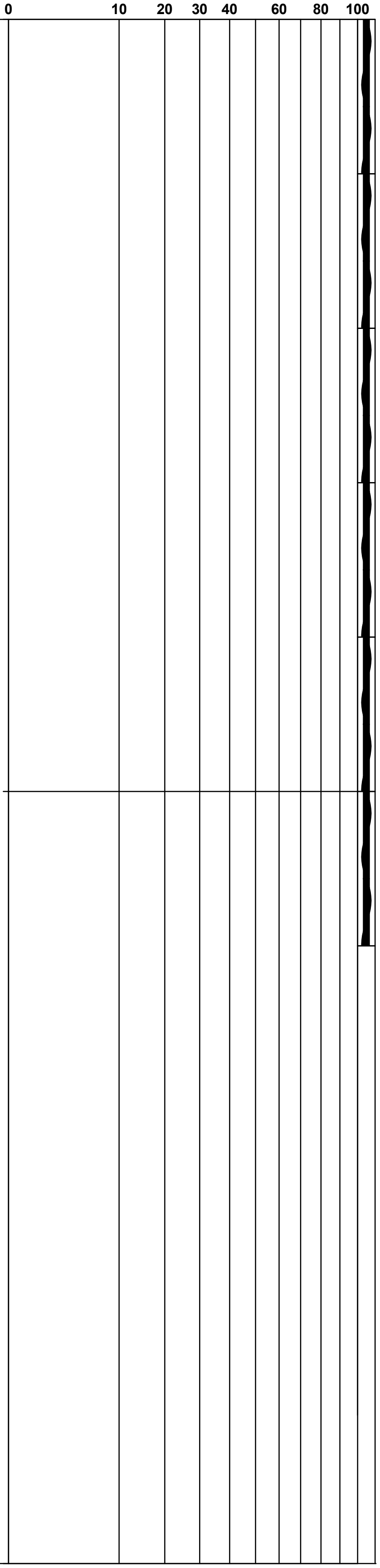

BORING LOCATION: Access road, 28.145086247°N, 81.945883061°W

BORING NUMBER HA-03
DATE DRILLED 11/17/2017
PROJECT NUMBER 12818
PROJECT Gibson Oaks WPF Site
PAGE 1 OF 1

TEST BORING RECORD
Madrid Engineering Group, Inc.

REMARKS: Water table at 52".

Depth (ft)	DESCRIPTION	Depth (ft)	Elev. (ft)	Blows	N-Value
	Gray sand (SP)	0			
				HA	HA
	<#200=1.5%				
			130	HA	HA
	Dark brown				
				HA	HA
	Yellowish brown		∇		
				HA	HA
				HA	HA
		5			

● STANDARD PENETRATION TEST

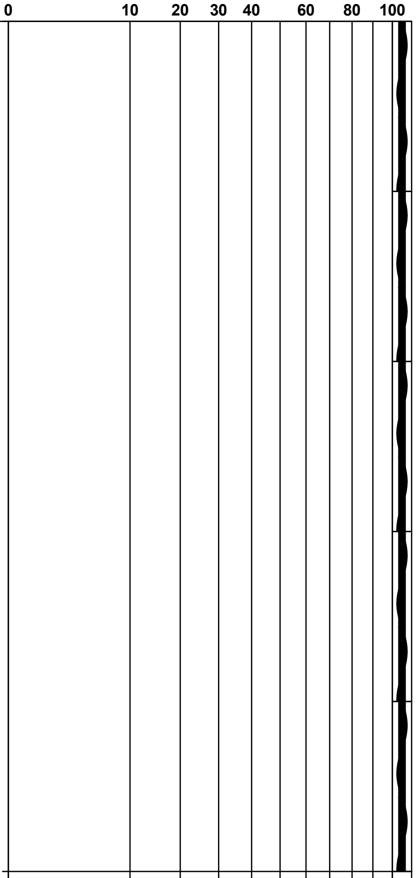

BORING LOCATION: Access road, 28.145706462°N, 81.945563097°W

BORING NUMBER	HA-04
DATE DRILLED	11/17/2017
PROJECT NUMBER	12818
PROJECT	Gibson Oaks WPF Site

PAGE 1 OF 1

TEST BORING RECORD

Madrid Engineering Group, Inc.

REMARKS: Water table at 37".

Depth (ft)	DESCRIPTION	Depth (ft)	Elev. (ft)	Blows	N-Value
	Gray sand (SP)	0			
				HA	HA
			130	HA	HA
				HA	HA
	Yellowish brown		∇		
				HA	HA
				HA	HA
		5			
				HA	HA

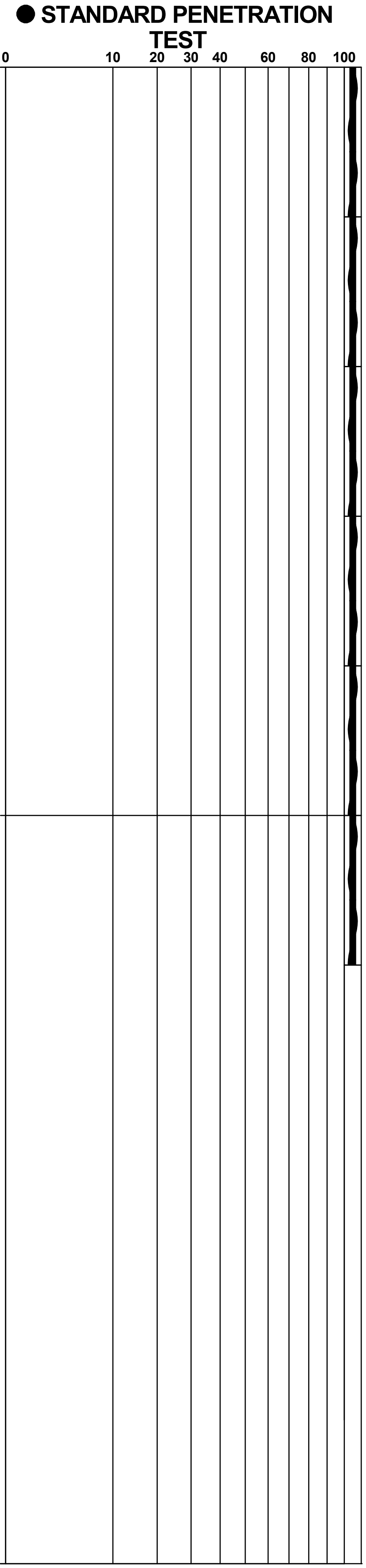

BORING LOCATION: Access road, 28.146010643°N, 81.944984316°W

BORING NUMBER HA-05
DATE DRILLED 11/17/2017
PROJECT NUMBER 12818
PROJECT Gibson Oaks WPF Site
PAGE 1 OF 1

TEST BORING RECORD
Madrid Engineering Group, Inc.

REMARKS: Water table at 37".

Depth (ft)	DESCRIPTION	Depth (ft)	Elev. (ft)	Blows	N-Value
	Gray sand (SP)	0			
				HA	HA
			130		
				HA	HA
	Dark yellowish brown				
				HA	HA
	<#200=3.5%				
			∇	HA	HA
				HA	HA
		5			
				HA	HA
			125		

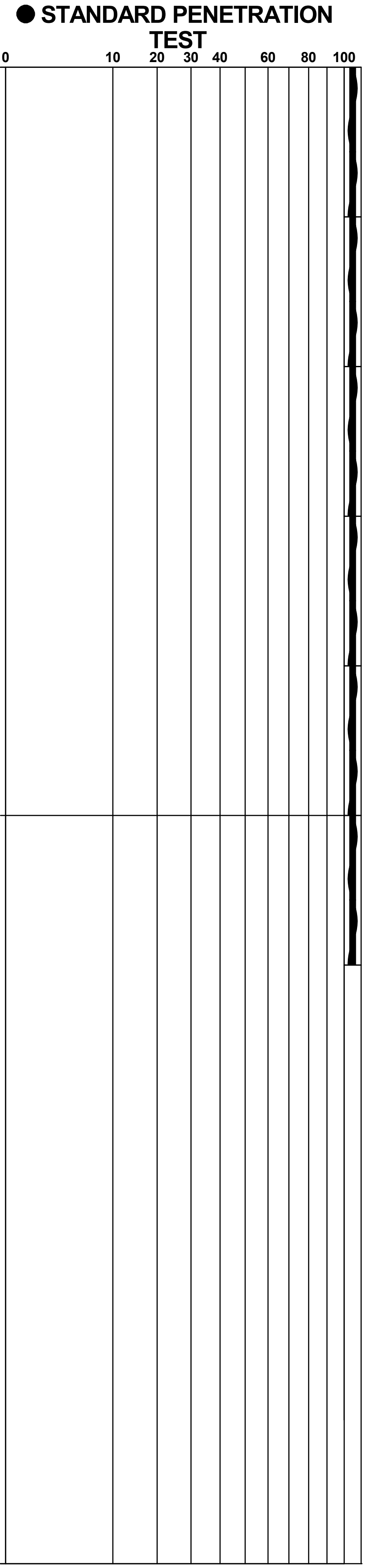

BORING LOCATION: Access road, 28.145988223°N, 81.944322688°W

BORING NUMBER HA-06
DATE DRILLED 11/17/2017
PROJECT NUMBER 12818
PROJECT Gibson Oaks WPF Site
PAGE 1 OF 1

TEST BORING RECORD
Madrid Engineering Group, Inc.

REMARKS: Water table at 42".

Depth (ft)	DESCRIPTION	Depth (ft)	Elev. (ft)	Blows	N-Value	● STANDARD PENETRATION TEST 0 10 20 30 40 60 80 100
	Dark brown sand (SP)	0	130			
				HA	HA	
				HA	HA	
				HA	HA	
			∇			
				HA	HA	
				HA	HA	
5		5	125			
				HA	HA	

BORING LOCATION: Access road, 28.145493981°N, 81.944538367°W

BORING NUMBER	HA-07
DATE DRILLED	11/17/2017
PROJECT NUMBER	12818
PROJECT	Gibson Oaks WPF Site

PAGE 1 OF 1

TEST BORING RECORD
Madrid Engineering Group, Inc.

REMARKS: Water table at 37".

Depth (ft)	DESCRIPTION	Depth (ft)	Elev. (ft)	Blows	N-Value	● STANDARD PENETRATION TEST 0 10 20 30 40 60 80 100
	Dark gray sand (SP)	0				
				HA	HA	
			130	HA	HA	
	Brown					
				HA	HA	
	Pale brown					
				HA	HA	
			∇			
				HA	HA	
		5				
				HA	HA	

BORING LOCATION: Access road and parking, 28.145103711°N, 81.945459855°W

BORING NUMBER HA-08
DATE DRILLED 11/17/2017
PROJECT NUMBER 12818
PROJECT Gibson Oaks WPF Site

PAGE 1 OF 1

TEST BORING RECORD
Madrid Engineering Group, Inc.

REMARKS: Water table at 52".

Depth (ft)	DESCRIPTION	Blows	N-Value
0	Loose gray to brown sand (SP)	3-4-3-3	7
	Medium dense grayish brown	5-6-5-4	11
	Loose with trace organics	3-4-4-4	8
	Medium dense light brownish gray	6-8-7-8	15
	Dark brown <#200=3.7%	6-5-6-6	11
		8-5-10	15
17	Medium dense light gray clayey sand (SC)	8-6-7	13
22	Loose light greenish gray slightly clayey sand (SP-SC)	6-5-5	10
	Very loose <#200=10.5%	1-2-1	3
32	Stiff light greenish gray clay (CH) <#200=85.7% LL=54 PI=33	4-6-5	11
37	Loose light greenish gray clayey sand with cemented fragments (SC)	3-5-5	10
	Dense	10-15-21	36
47	Very dense very pale brown limestone with pale olive clay (LS)	26-35-50/5"	95
52	Very dense greenish gray calcareous clayey sand (SC)	26-30-34	64
57	Very dense very pale brown limestone with gray clay (LS)	50/4"	Refusal

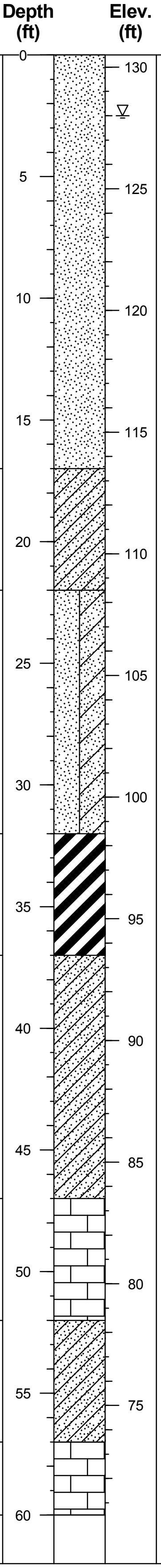

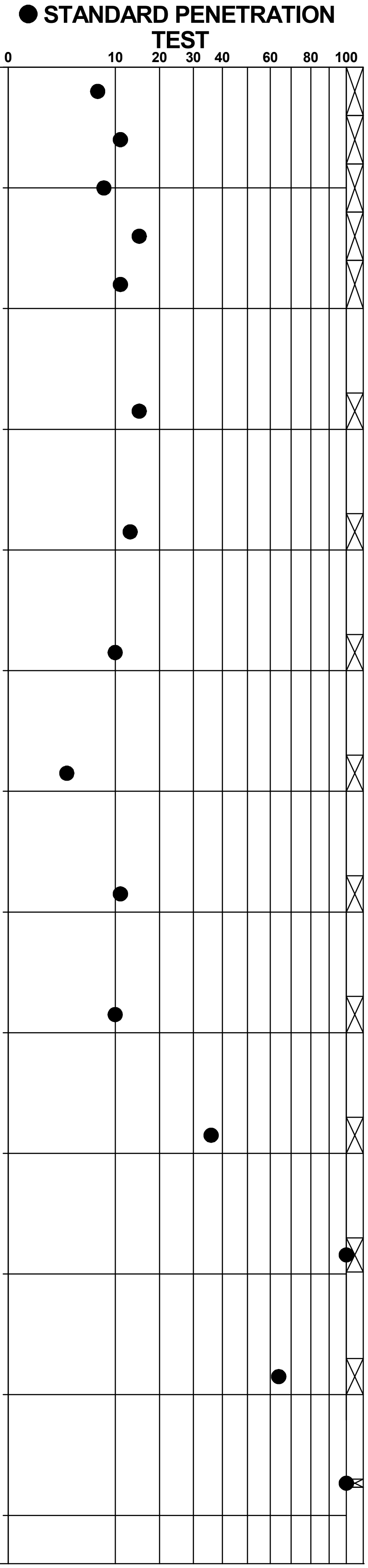

BORING LOCATION: Center of tank, 28.145675588°N, 81.945011443°W

BORING NUMBER	SPT-01
DATE DRILLED	11/16/2017
PROJECT NUMBER	12818
PROJECT	Gibson Oaks WPF Site

PAGE 1 OF 1

TEST BORING RECORD
Madrid Engineering Group, Inc.

REMARKS: Water table at 30". No loss of circulation.

Depth (ft)	DESCRIPTION	Blows	N-Value
0	Loose dark gray slightly silty sand (SP-SM)	2-4-4-5	8
2	Medium dense light gray to pale brown sand (SP)	5-6-7-10	13
	Grayish brown	7-8-8-8	16
		8-7-8-8	15
	Loose brown	4-5-4-4	9
12	Medium dense very dark brown slightly silty sand with trace organics (SP-SM) <#200=9.4% Organic content=2.0%	4-9-10	19
	Medium dense very pale brown sand	4-5-9	14
22	Loose very pale brown clayey sand (SC)	4-5-5	10
		3-3-3	6
	Greenish gray with trace gravel <#200=29.8%	3-2-3	5
37	Firm light brownish gray clay (CH) <#200=85.3% LL=70 PI=55	3-2-4	6
	Stiff	4-5-4	9
	Very stiff greenish gray	4-6-10	16
50			

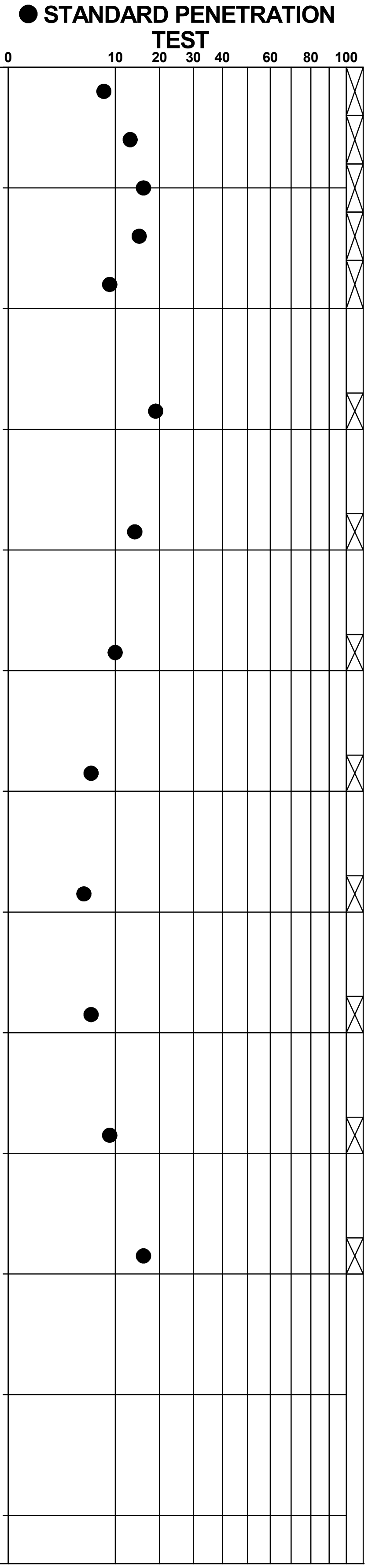

BORING LOCATION: North edge of tank, 28.145529162°N, 81.945012067°W

BORING NUMBER SPT-02
DATE DRILLED 11/16/2017
PROJECT NUMBER 12818
PROJECT Gibson Oaks WPF Site
PAGE 1 OF 1

TEST BORING RECORD
Madrid Engineering Group, Inc.

REMARKS: Water table at 30". No loss of circulation.

Depth (ft)	DESCRIPTION	Blows	N-Value
	Loose very dark gray sand (SP)	2-3-4-4	7
	Light gray	3-4-5-5	9
	Grayish brown <#200=3.4%	3-4-4-6	8
	Dark gray	3-4-6-6	10
	Very dark gray	3-4-3-3	7
	Medium dense very dark brown	7-8-9	17
17	Firm light gray clay (CH)		
	<#200=86.4% LL=72 PI=56	3-4-3	7
	Soft greenish gray with cemented fragments	2-1-2	3
27	Very loose white silty sand (SM)		
	<#200=37.1% LL=27 PI=0	1-1-1	2
32	Very stiff greenish gray borderline clayey sand to sandy clay (SC/CL)	8-9-7	16
	Stiff	7-7-8	15
42	Stiff greenish gray clay (CH)		
	<#200=64.0%	9-4-4	8

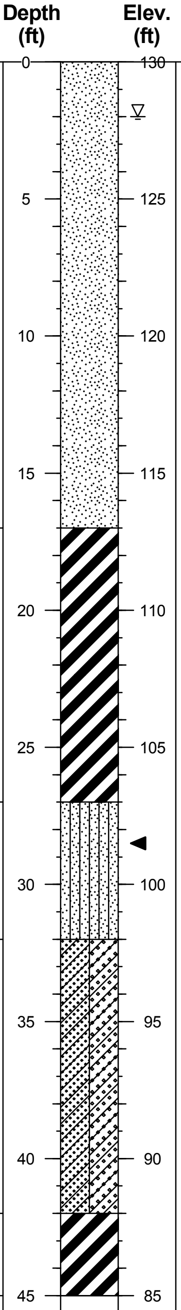

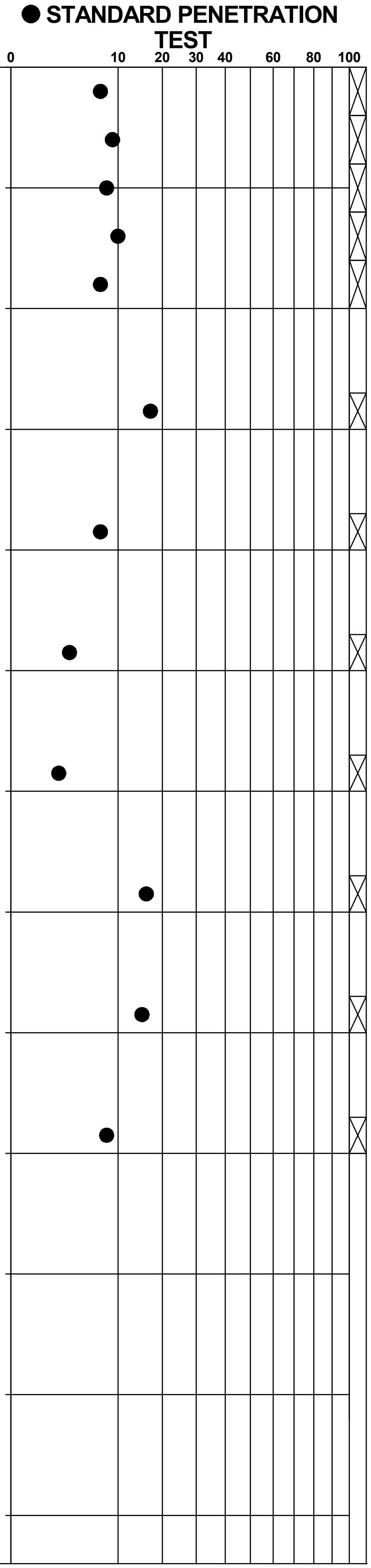

BORING LOCATION: Southeast edge of tank, 28.14546737°N, 81.944881519°W

BORING NUMBER SPT-03
DATE DRILLED 11/17/2017
PROJECT NUMBER 12818
PROJECT Gibson Oaks WPF Site
PAGE 1 OF 1

TEST BORING RECORD
Madrid Engineering Group, Inc.

REMARKS: Water table at 2'. 40% loss of circulation at 28.5'.

Depth (ft)	DESCRIPTION	Blows	N-Value
0	Loose gray sand (SP)	3-5-4-6	9
	Medium dense	6-5-7-8	12
	Loose light gray	4-5-5-6	10
	Medium dense grayish brown	7-6-6-6	12
8	Loose very dark grayish brown slightly silty sand with trace organics (SP-SM) <#200=5.9% Organic content=1.3%	3-4-4-3	8
	Very pale brown	4-3-4	7
17	Loose white slightly clayey sand (SP-SC)	4-5-3	8
	With some gravel <#200=11.2%	3-3-3	6
27	Loose gray clayey sand (SC)	3-4-4	8
32	Firm greenish gray clay (CH)	3-3-3	6
	<#200=66.1%	4-3-3	6
	Stiff	4-5-4	9
	Firm	4-4-4	8
50			

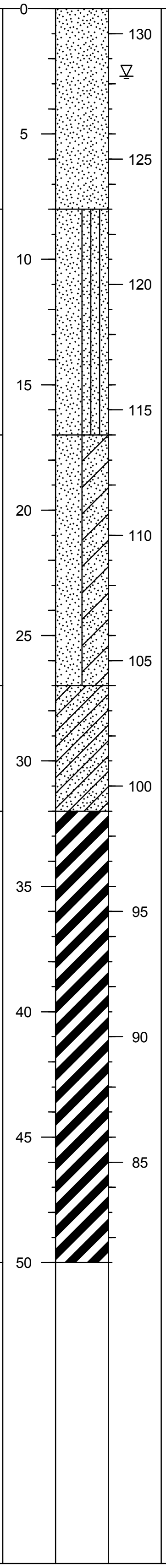

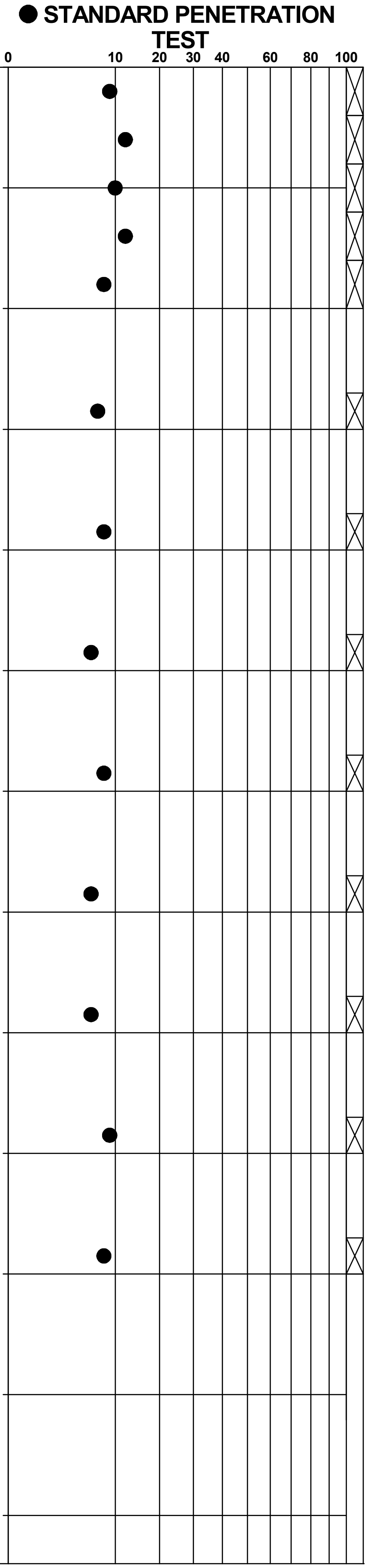

BORING LOCATION: Southwest edge of tank, 28.145443731°N, 81.945126631°W

BORING NUMBER SPT-04
DATE DRILLED 11/17/2017
PROJECT NUMBER 12818
PROJECT Gibson Oaks WPF Site
PAGE 1 OF 1

TEST BORING RECORD
Madrid Engineering Group, Inc.

REMARKS: Water table at 32". No loss of circulation.

Depth (ft)	DESCRIPTION	Elev. (ft)	Blows	N-Value
0				
	Very loose gray sand (SP)		1-2-2-3	4
	Light gray	∇	4-2-2-4	4
5	Loose dark grayish brown	125	4-5-5-6	10
	Medium dense very dark grayish brown		4-5-6-6	11
	Very dark brown		2-3-10-15	13
10		120		
15	Dark brown <#200=2.3%	115	6-7-8	15
20	Dark yellowish brown	110	7-9-7	16

● STANDARD PENETRATION TEST

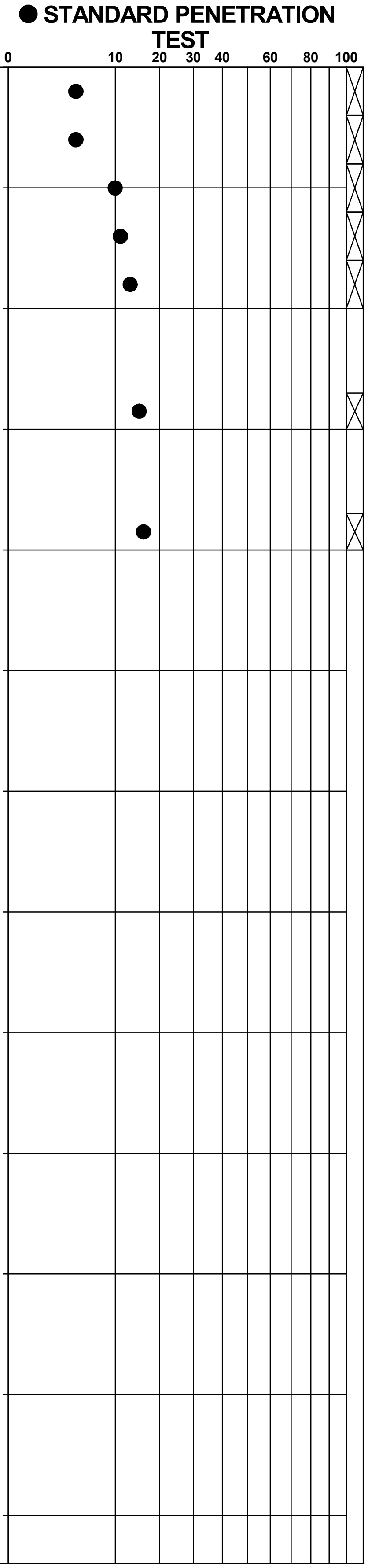

BORING LOCATION: East edge of pump station, 28.145409516°N, 81.944724247°W

BORING NUMBER	SPT-05
DATE DRILLED	11/16/2017
PROJECT NUMBER	12818
PROJECT	Gibson Oaks WPF Site

PAGE 1 OF 1

TEST BORING RECORD
Madrid Engineering Group, Inc.

REMARKS: Water table at 4'. No loss of circulation.

DESCRIPTION	Blows	N-Value
Loose gray sand (SP)	3-3-3-3	6
Very pale brown <#200=1.7%	4-2-4-4	6
Medium dense dark gray	4-5-8-8	13
Loose brown	4-4-6-4	10
Medium dense grayish brown	5-5-8-8	13
Loose dark yellowish brown	4-5-5	10
Medium dense dark brown	4-6-8	14

Depth (ft): 0, 5, 10, 15, 20

Elev. (ft): 130, 125, 120, 115

● STANDARD PENETRATION TEST

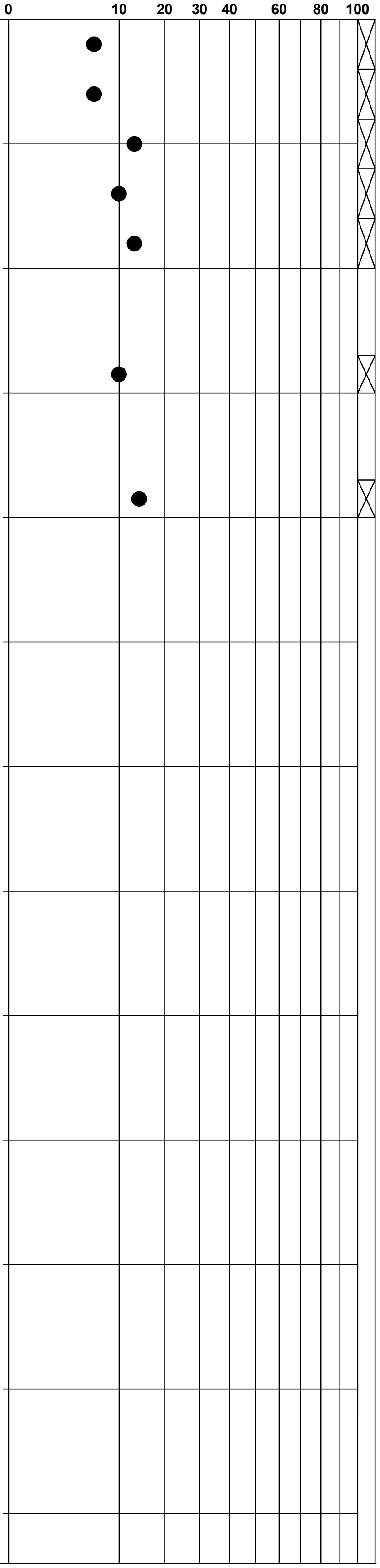

BORING LOCATION: Finish Water Station, 28.145244627°N, 81.944978069°W

BORING NUMBER SPT-06
DATE DRILLED 11/16/2017
PROJECT NUMBER 12818
PROJECT Gibson Oaks WPF Site
PAGE 1 OF 1

TEST BORING RECORD
Madrid Engineering Group, Inc.

REMARKS: Water table at 4'. No loss of circulation.

Depth (ft)	DESCRIPTION	Depth (ft)	Elev. (ft)	Blows	N-Value
	Very loose gray sand (SP)	0	130	1-2-2-2	4
	Loose dark grayish brown		∇	4-4-4-5	8
	Medium dense yellowish brown	5		7-8-7-7	15
	Dark yellowish brown to dark gray		125	5-7-4-4	11
	Loose pale brown			3-6-4-5	10
		10	120		
	Yellowish brown <#200=2.9%	15		4-5-4	9
			115		
	Very pale brown	20		3-3-2	5

● STANDARD PENETRATION TEST

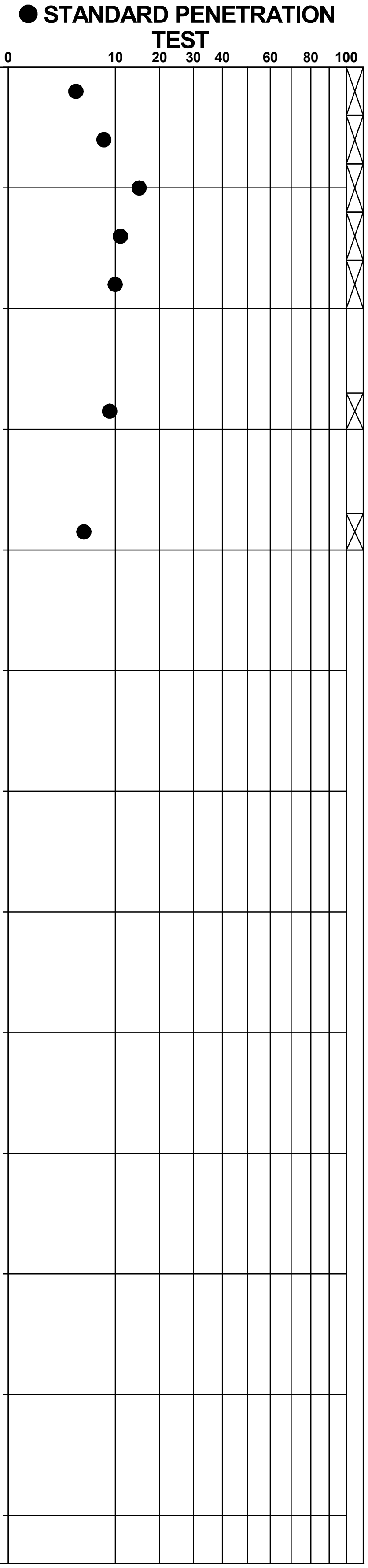

BORING LOCATION: Chemical System, 28.14522619°N, 81.945371274°W

BORING NUMBER	SPT-07
DATE DRILLED	11/16/2017
PROJECT NUMBER	12818
PROJECT	Gibson Oaks WPF Site

PAGE 1 OF 1

TEST BORING RECORD
Madrid Engineering Group, Inc.

REMARKS: Water table at 4'. No loss of circulation.

DESCRIPTION	Depth (ft)	Elev. (ft)	Blows	N-Value
	0			
Very loose gray sand (SP)		130	1-1-2-2	3
Medium dense dark grayish brown sand (SP)			4-5-6-6	11
Yellowish brown	5	▽	3-5-6-5	11
		125		
Loose very pale brown <#200=2.4%			3-3-3-4	6
Pale brown			3-3-4-6	7
	10			
		120		
Brown			5-5-4	9
	15			
		115		
Medium dense pale brown			7-7-7	14
	20			
		110		
Dark brown			8-7-8	15
	25			

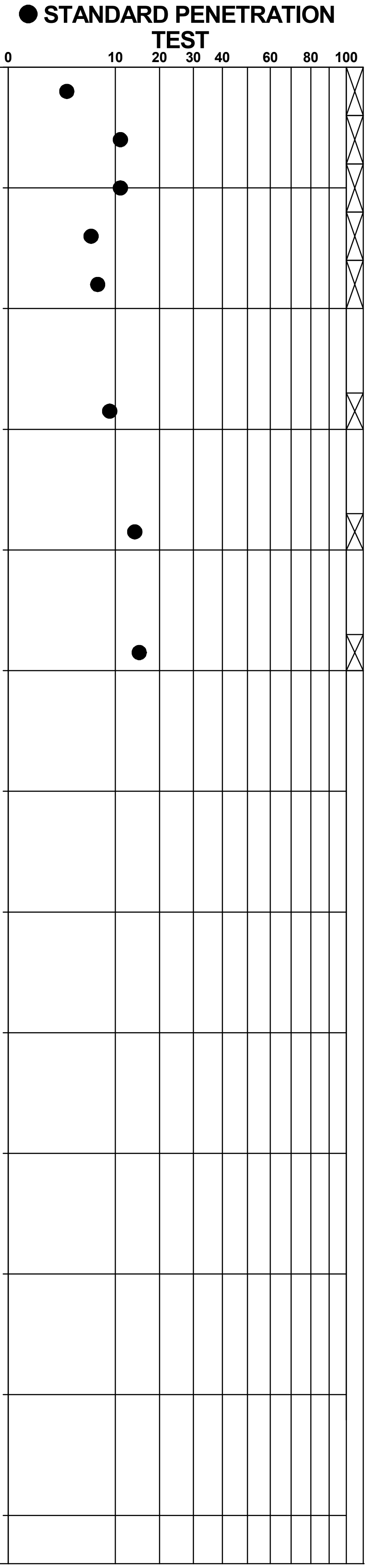

BORING LOCATION: East edge of Operations Building, 28.145001455°N, 81.94537701°W

BORING NUMBER SPT-08
DATE DRILLED 11/17/2017
PROJECT NUMBER 12818
PROJECT Gibson Oaks WPF Site
PAGE 1 OF 1

TEST BORING RECORD
Madrid Engineering Group, Inc.

REMARKS: Water table at 5'. No loss of circulation.

DESCRIPTION	Blows	N-Value
Very loose very dark grayish brown sand (SP)	1-1-2-4	3
Loose light brownish gray	4-4-6-6	10
<#200=2.7%	5-3-3-3	6
Pale brown	3-2-3-3	5
Brown	2-3-4-4	7
	4-6-4	10
Medium dense	6-5-6	11
	6-6-5	11

Depth (ft): 0, 5, 10, 15, 20, 25

Elev. (ft): 130, 125, 120, 115, 110

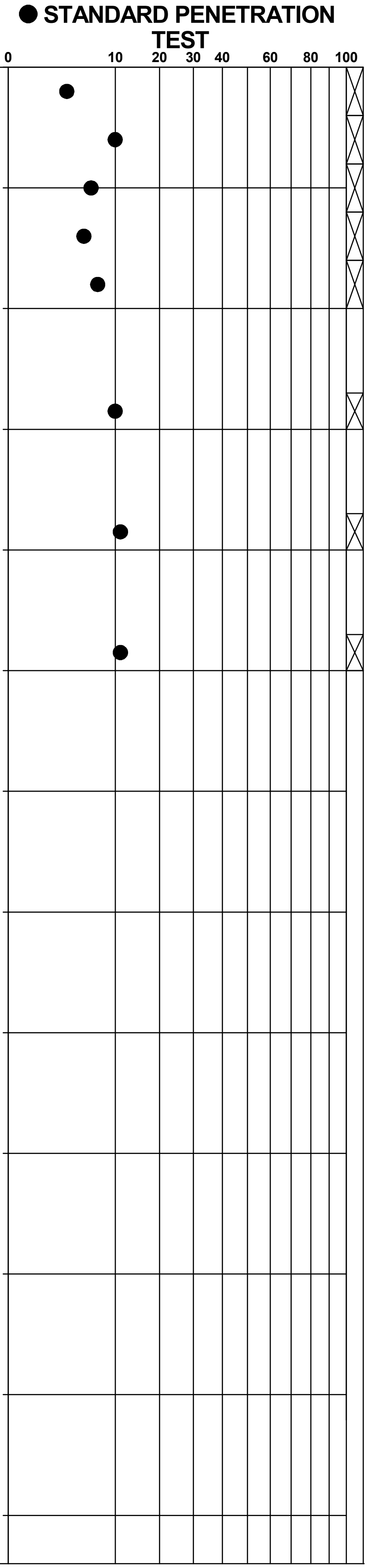

BORING LOCATION: West edge of Operations Building, 28.144961943°N, 81.945544111°W

BORING NUMBER	SPT-09
DATE DRILLED	11/17/2017
PROJECT NUMBER	12818
PROJECT	Gibson Oaks WPF Site

PAGE 1 OF 1

TEST BORING RECORD
Madrid Engineering Group, Inc.

REMARKS: Water table at 5'. No loss of circulation.

Depth (ft)	DESCRIPTION	Depth (ft)	Elev. (ft)	Blows	N-Value
	Very loose gray sand (SP)	0	130	2-2-2-3	4
	Loose yellowish brown <#200=2.2%		▽	3-2-4-2	6
5	Light yellowish brown	5	125	3-2-3-3	5
				2-2-3-2	5
	Brown			3-3-2-5	5
10		10	120		
				3-3-4	7
15		15			

● STANDARD PENETRATION TEST

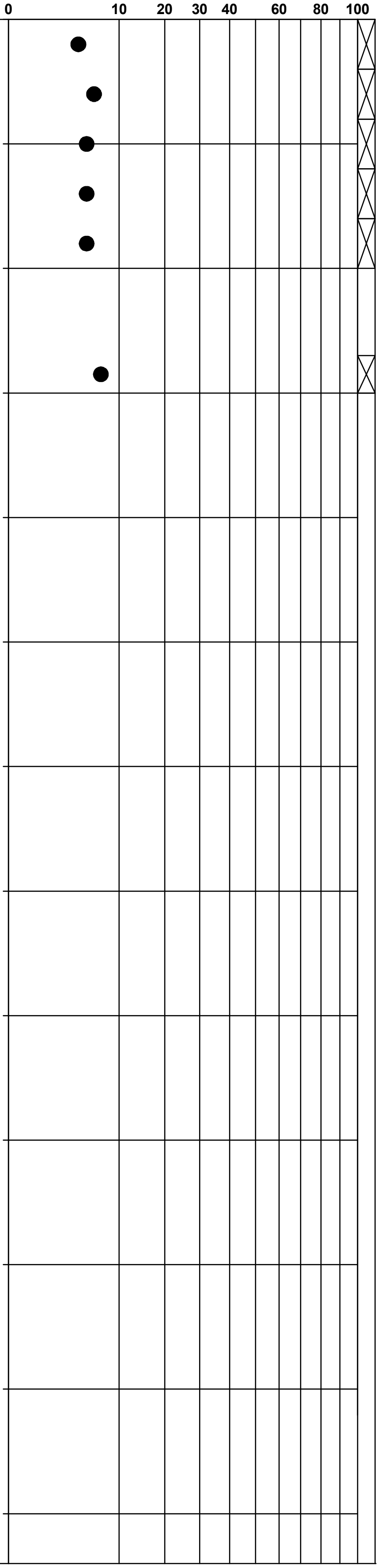

BORING LOCATION: West end of pond, 28.144554811°N, 81.945697327°W

BORING NUMBER	SPT-10
DATE DRILLED	11/17/2017
PROJECT NUMBER	12818
PROJECT	Gibson Oaks WPF Site

PAGE 1 OF 1

TEST BORING RECORD
Madrid Engineering Group, Inc.

REMARKS: Water table at 4'. No loss of circulation.

Depth (ft)	DESCRIPTION	Depth (ft)	Elev. (ft)	Blows	N-Value
	Loose dark gray sand (SP)	0		3-3-4-5	7
	Very dark gray			5-5-4-5	9
3	Loose very dark gray slightly silty sand with trace organics (SP-SM) <#200=5.2% Organic content=1.8%		∇125		
	Medium dense	5		6-8-7-6	15
	Loose			3-4-2-2	6
9	Loose brown sand (SP)		120	4-4-4-4	8
		10			
			115	2-3-3	6
		15			

● STANDARD PENETRATION TEST

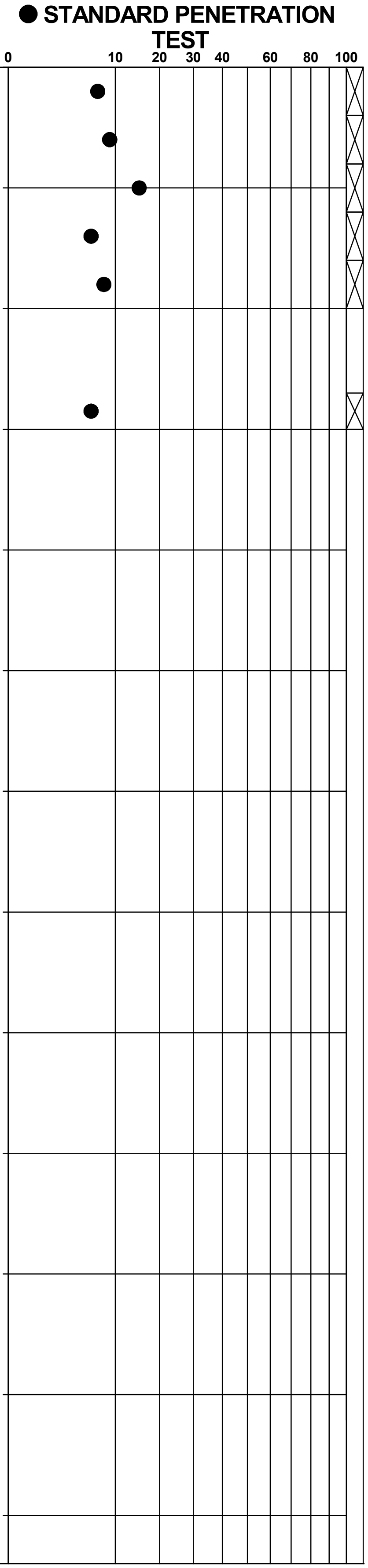

BORING LOCATION: East end of pond, 28.145987633°N, 81.943758407°W

BORING NUMBER SPT-11
DATE DRILLED 11/16/2017
PROJECT NUMBER 12818
PROJECT Gibson Oaks WPF Site
PAGE 1 OF 1

TEST BORING RECORD
Madrid Engineering Group, Inc.

REMARKS: Water table at 4'. No loss of circulation.

MEG WITH BLOW COUNTS 12818 GIBSON GINT LOGS.GPJ SAMPLE.GDT 12/7/17

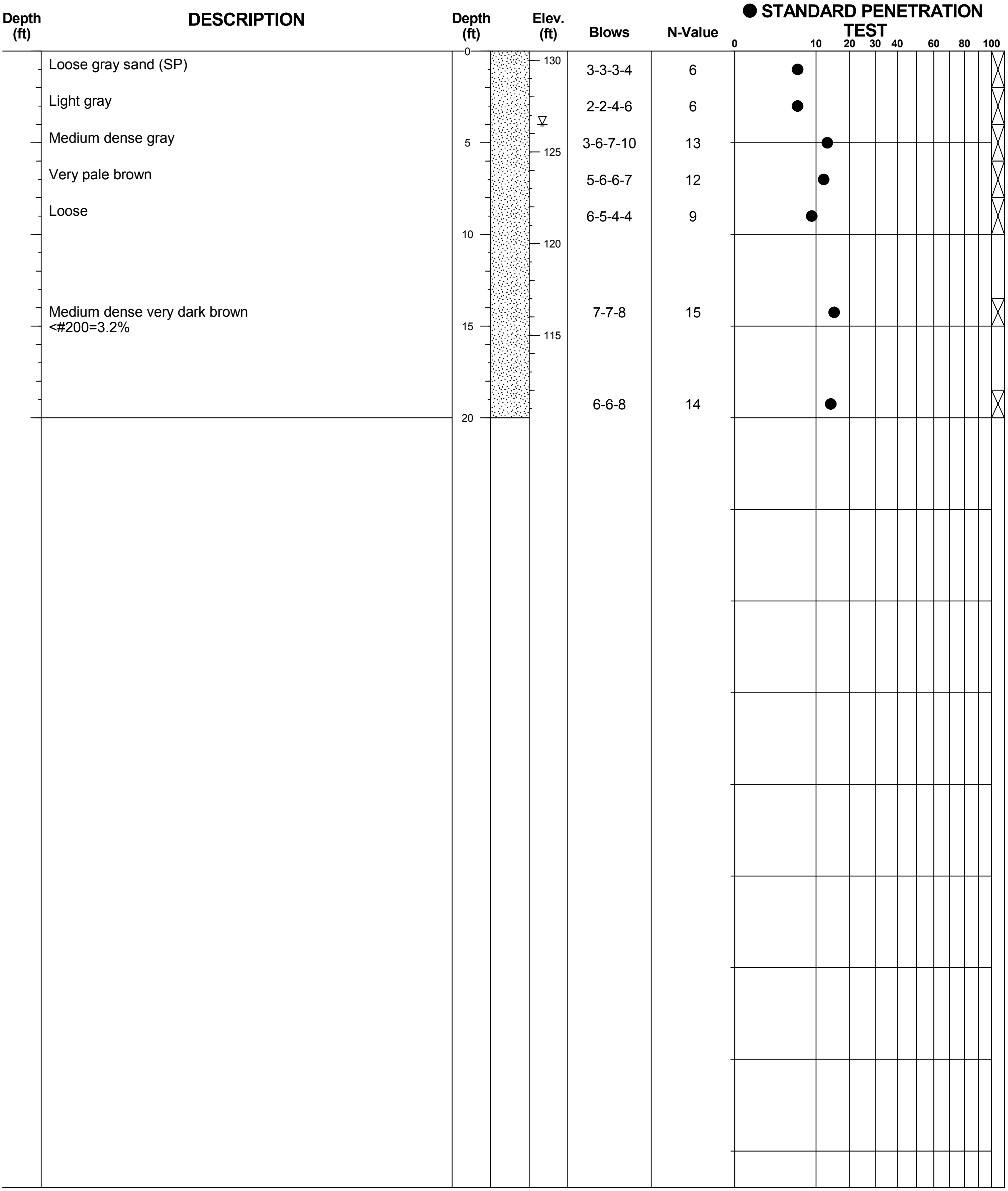

DESCRIPTION	Blows	N-Value
Loose gray sand (SP)	3-3-3-4	6
Light gray	2-2-4-6	6
Medium dense gray	3-6-7-10	13
Very pale brown	5-6-6-7	12
Loose	6-5-4-4	9
Medium dense very dark brown <#200=3.2%	7-7-8	15
	6-6-8	14

BORING LOCATION: West end of Pump Station, 28.145332524°N, 81.944933545°W

BORING NUMBER	SPT-12
DATE DRILLED	11/16/2017
PROJECT NUMBER	12818
PROJECT	Gibson Oaks WPF Site

PAGE 1 OF 1

TEST BORING RECORD
Madrid Engineering Group, Inc.

REMARKS: Water table at 4'. No loss of circulation.

MEG WITH BLOW COUNTS 12818 GIBSON GINT LOGS.GPJ SAMPLE.GDT 12/7/17

APPENDIX B

MADRID ENGINEERING GROUP, INC.
2030 State Road 60 East
Bartow, Florida 33830
(863)533-9007 FAX: (863)533-8997

ASTM C117-13 MOISTURE / PERCENT < No. 200 SIEVE

Project Number: 12818
Project Name: Gibson Oaks WPF
Project Location: Lakeland
Client: Carollo

Date Tested: 11/28/2017
Tested By: WG

Page 1 of 1

Sample	Cont. Name	W_C+S_W (g)	W_C+S_D (g)	W_C (g)	Solids Content (%)	Moisture Content (%)	W_C+S_R (g)	<#200 (%)
TP-1 Hor Shelby 2-2'	B17	229.96	190.98	18.22	81.6%	22.6%	188.50	1.4%
TP-1 Vert Shelby 2-2.5'	207	155.64	128.93	8.89	81.8%	22.3%	123.23	4.7%
TP-2 Hor Shelby 2-2'	660	223.47	179.73	9.87	79.5%	25.8%	175.93	2.2%
TP-2 Vert Shelby 2-2.5'	12	214.76	178.75	7.85	82.6%	21.1%	174.15	2.7%
HA-1 1-2'	J-18	135.91	114.04	7.75	82.9%	20.6%	107.18	6.5%
HA-4 1-2'	121	107.93	102.05	7.55	94.1%	6.2%	100.64	1.5%
HA-6 3-4'	123	123.80	105.67	7.63	84.4%	18.5%	102.19	3.5%
SPT-1 8-10'	660	148.69	125.57	7.40	83.6%	19.6%	121.20	3.7%
SPT-1 28.5-30'	A-12	117.12	93.40	7.40	78.4%	27.6%	84.37	10.5%
SPT-1 33.5-35'	1	72.07	45.65	7.53	59.1%	69.3%	12.99	85.7%
SPT-2 13.5-15'	7	147.57	123.31	7.80	82.6%	21.0%	112.50	9.4%
SPT-2 33.5-35'	9	127.20	108.63	7.50	84.5%	18.4%	78.53	29.8%
SPT-2 38.5-40'	A-1	85.30	57.13	7.53	63.8%	56.8%	14.84	85.3%
SPT-3 4-6'	110	173.30	143.32	7.75	81.9%	22.1%	138.74	3.4%
SPT-3 18.5-20'	912	84.93	63.97	7.54	72.9%	37.1%	15.19	86.4%
SPT-3 28.5-30'	A-17	78.38	49.33	7.47	59.0%	69.4%	33.82	37.1%
SPT-3 43.5-45'	20	167.38	111.51	7.67	65.0%	53.8%	45.08	64.0%
SPT-4 8-10'	124	127.40	104.76	7.34	81.1%	23.2%	99.04	5.9%
SPT-4 23.5-25'	223	113.83	90.42	8.96	77.7%	28.7%	81.31	11.2%
SPT-4 38.5-40'	11	95.72	59.94	7.65	59.4%	68.4%	25.39	66.1%

W_C = Weight of Container
S_W = Weight of Wet Sample
S_D = Weight of Dry Sample
S_R = Weight of Sample Retained

$$\text{Solids Content (\%)} = \frac{S_D}{S_W} * 100$$

$$\text{Moisture Content (\%)} = \frac{W_{H_2O}}{S_D} * 100$$

$$< \# 200 \text{ Sieve (\%)} = \frac{(S_D - S_R)}{S_D} * 100$$

MADRID ENGINEERING GROUP, INC.
2030 State Road 60 East
Bartow, Florida 33830
(863)533-9007 FAX: (863)533-8997

ASTM C117-13 MOISTURE / PERCENT < No. 200 SIEVE

Project Number: 12818
Project Name: Gibson Oaks WPF
Project Location: Lakeland
Client: Carollo

Date Tested: 11/28/2017
Tested By: WG

Page 1 of 1

Sample	Cont. Name	W_C+S_W (g)	W_C+S_D (g)	W_C (g)	Solids Content (%)	Moisture Content (%)	W_C+S_R (g)	<#200 (%)
SPT-5 13.5-15'	224	125.06	105.54	8.99	83.2%	20.2%	103.33	2.3%
SPT-6 2-4'	221	131.24	113.89	8.96	85.8%	16.5%	112.06	1.7%
SPT-7 13.5-15'	222	180.24	157.62	9.00	86.8%	15.2%	153.26	2.9%
SPT-8 6-8'	219	117.30	103.76	8.95	87.5%	14.3%	101.52	2.4%
SPT-9 4-6'	220	120.70	106.53	8.96	87.3%	14.5%	103.88	2.7%
SPT-10 2-4'	217	176.56	151.29	8.98	84.9%	17.8%	148.23	2.2%
SPT-11 4-6'	A-15	118.92	104.37	7.43	86.9%	15.0%	99.31	5.2%
SPT-12 13.5-15'	218	133.40	116.36	9.00	86.3%	15.9%	112.91	3.2%

$W_C = \text{Weight of Container}$
$S_W = \text{Weight of Wet Sample}$
$S_D = \text{Weight of Dry Sample}$
$S_R = \text{Weight of Sample Retained}$

$$\text{Solids Content (\%)} = \frac{S_D}{S_W} * 100$$

$$\text{Moisture Content (\%)} = \frac{W_{H_2O}}{S_D} * 100$$

$$< \# 200 \text{ Sieve (\%)} = \frac{(S_D - S_R)}{S_D} * 100$$

MADRID ENGINEERING GROUP, INC.
2030 State Road 60 East
Bartow, Florida 33830
(863)533-9007 FAX: (863)533-8997

AASHTO T267 ORGANIC CONTENT

Project Number: 12818
Project Name: Gibson Oaks WPF
Project Location: Lakeland
Client: Carollo
Date Tested: 11/29/2017
Technician: DJ

Sample	Container Name	W_C+S_W (g)	W_C+S_D (g)	W_C (g)	Solids Content (%)	Moist-ure Content (%)	Furnace Container Name	$W_{fC}+S_D$ (g)	$W_{fC}+S_{FD}$ (g)	W_{fC} (g)	Organic Content (%)
HA-1 1-2'	114	114.95	94.86	7.55	81.3%	23.0%	12	144.47	141.82	57.18	3.0%
SPT-2 13.5-15'	P-2	148.16	122.60	7.47	81.8%	22.2%	4	170.90	168.61	55.85	2.0%
SPT-4 8-10'	13	124.84	101.72	7.69	80.3%	24.6%	E	170.75	169.55	77.27	1.3%

W_C = Weight of Container
S_W = Weight of Wet Sample
S_D = Weight of Dry Sample
W_{fC} = Weight of Furnace Container
S_{FD} = Weight of Furnace Dried Sample

$$\text{Solids Content (\%)} = \frac{S_D}{S_W} * 100$$

$$\text{Moisture Content (\%)} = \frac{(S_W - S_D)}{S_D} * 100$$

$$\text{Organic Content (\%)} = \frac{(S_D - S_{FD})}{S_D} * 100$$

MADRID ENGINEERING GROUP, INC.

2030 State Road 60 East
Bartow, Florida 33830
(863)533-9007 FAX: (863)533-8997

AASHTO T267 ORGANIC CONTENT

Project Number: 12818
Project Name: Gibson Oaks WPF
Project Location: Lakeland
Client: Carollo
Date Tested: 11/28/2017
Technician: WG

Sample	Container Name	W_C+S_W (g)	W_C+S_D (g)	W_C (g)	Solids Content (%)	Moist-ure Content (%)	Furnace Container Name	W_{fC}+ S_D (g)	W_{fC}+ S_{FD} (g)	W_{fC} (g)	Organic Content (%)
SPT-11 4-6'	T1	139.90	121.23	7.39	85.9%	16.4%	4	169.65	167.61	55.82	1.8%

W_C = Weight of Container
S_W = Weight of Wet Sample
S_D = Weight of Dry Sample
W_{fC} = Weight of Furnace Container
S_{FD} = Weight of Furnace Dried Sample

$$\text{Solids Content (\%)} = \frac{S_D}{S_W} * 100$$

$$\text{Moisture Content (\%)} = \frac{(S_W - S_D)}{S_D} * 100$$

$$\text{Organic Content (\%)} = \frac{(S_D - S_{FD})}{S_D} * 100$$

MADRID ENGINEERING GROUP, INC.
2030 State Road 60 East
Bartow, Florida 33830
863/533-9007 FAX: 863/533-8997

ATTERBERG LIMITS DETERMINATION AASHTO T89/90

Project Number: 12818
Project Name: Gibson Oaks WPF
Project Location: Lakeland
Client: Carollo

MEG Report Number: 12818-SPT-3
Date Sampled: 11/29/2017
Date Tested: 12/1/2017
Technician: MS

Sample Number: SPT-1
Soil Description: highly plastic slightly sandy clay

Sample Location: 33.5 TO 35'
USCS Code: CH

Liquid Limit					
Sample Number	F	L	101		
W_C+S_W (g)	28.80	29.04	29.38		
W_C+S_D (g)	26.69	26.47	25.50		
W_C (g)	20.74	20.82	21.53		
S_D (g)	5.95	5.65	3.97		
W_{H2O} (g)	2.11	2.57	3.88		
Number of Blows	34	26	14		
Moisture Content (%)	35.46	45.49	97.73		

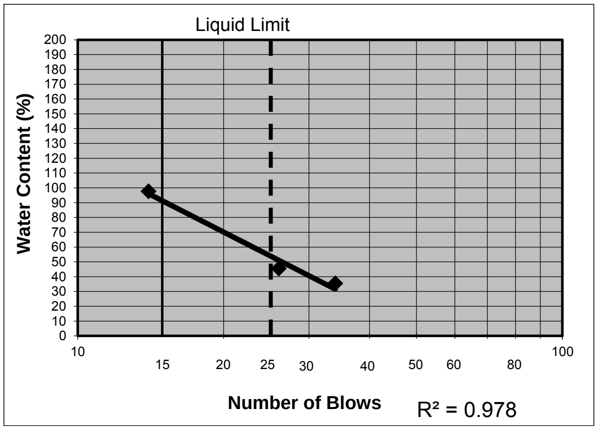

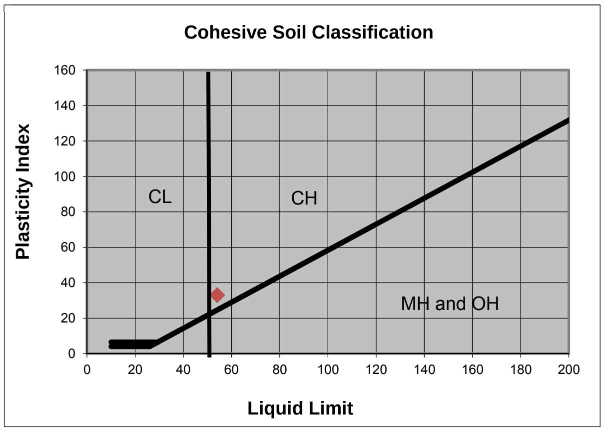

Plastic Limit				
Sample Number	11	H		
W_C+S_W (g)	25.90	24.93		
W_C+S_D (g)	25.08	24.21		
W_C (g)	20.98	20.80		
S_D (g)	4.10	3.41		
W_{H2O} (g)	0.82	0.72		
Moisture Content (%)	20.00	21.11		

Summary	
% < #200 =	**85.7**
Liquid Limit =	**54**
Plastic Limit =	**21**
Plasticity Index =	**33**

W_C = Weight of Container
S_W = Weight of Wet Sample
S_D = Weight of Dry Sample

$$\text{Moisture Content (\%)} = \frac{W_{H_2O}}{S_D} * 100$$

σ = 0.56

MADRID ENGINEERING GROUP, INC.
2030 State Road 60 East
Bartow, Florida 33830
863/533-9007 FAX: 863/533-8997

ATTERBERG LIMITS DETERMINATION AASHTO T89/90

Project Number: 12818
Project Name: Gibson Oaks WPF
Project Location: Lakeland
Client: Carollo

MEG Report Number: 12818-SPT-2
Date Sampled: 11/21/2017
Date Tested: 12/1/2017
Technician: MAS

Sample Number: SPT-2
Soil Description: highly plastic slightly sandy clay

Sample Location: 38.5 TO 40'
USCS Code: CH

Liquid Limit

Sample Number	1	2	3		
W_C+S_W (g)	28.81	28.48	27.50		
W_C+S_D (g)	25.54	25.29	24.62		
W_C (g)	20.71	20.75	20.74		
S_D (g)	4.83	4.54	3.88		
W_{H2O} (g)	3.27	3.19	2.88		
Number of Blows	34	23	14		
Moisture Content (%)	67.70	70.26	74.23		

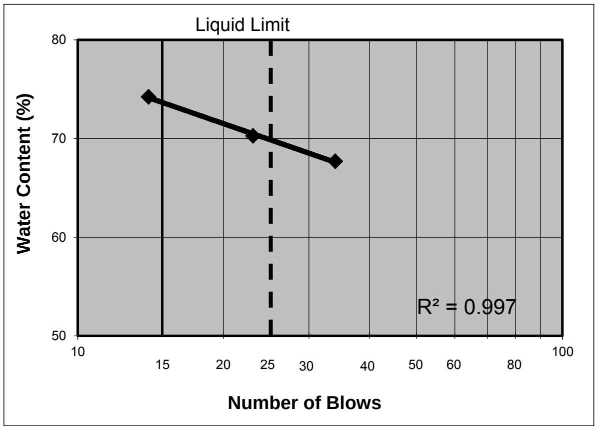

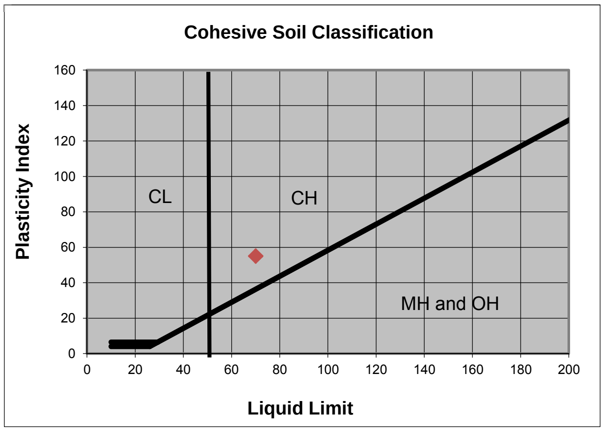

Plastic Limit

Sample Number	5	4		
W_C+S_W (g)	25.40	25.98		
W_C+S_D (g)	24.80	25.29		
W_C (g)	20.80	20.73		
S_D (g)	4.00	4.56		
W_{H2O} (g)	0.60	0.69		
Moisture Content (%)	15.00	15.13		

Summary	
% < #200 =	**85.3**
Liquid Limit =	**70**
Plastic Limit =	**15**
Plasticity Index =	**55**

W_C = Weight of Container
S_W = Weight of Wet Sample
S_D = Weight of Dry Sample

$$\text{Moisture Content (\%)} = \frac{W_{H_2O}}{S_D} * 100$$

σ = 0.07

MADRID ENGINEERING GROUP, INC.
2030 State Road 60 East
Bartow, Florida 33830
863/533-9007 FAX: 863/533-8997

ATTERBERG LIMITS DETERMINATION AASHTO T89/90

Project Number: 12818
Project Name: Gibson Oaks WPF
Project Location: Lakeland
Client: Carollo

MEG Report Number: 12818-SPT-3
Date Sampled: 11/21/2017
Date Tested: 11/29/2017
Technician: MAS

Sample Number: SPT-3
Soil Description: highly plastic slightly sandy clay

Sample Location: 18.5 TO 20'
USCS Code: CH

Liquid Limit

Sample Number	1	2	3		
W_C+S_W (g)	28.79	28.44	27.45		
W_C+S_D (g)	25.52	25.20	24.51		
W_C (g)	20.69	20.74	20.71		
S_D (g)	4.83	4.46	3.80		
W_{H2O} (g)	3.27	3.24	2.94		
Number of Blows	35	25	14		
Moisture Content (%)	67.70	72.65	77.37		

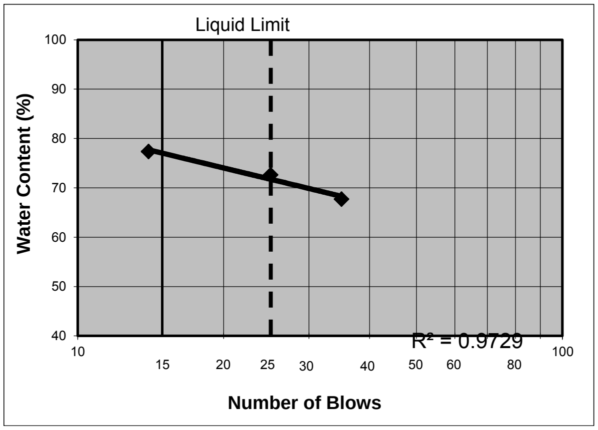

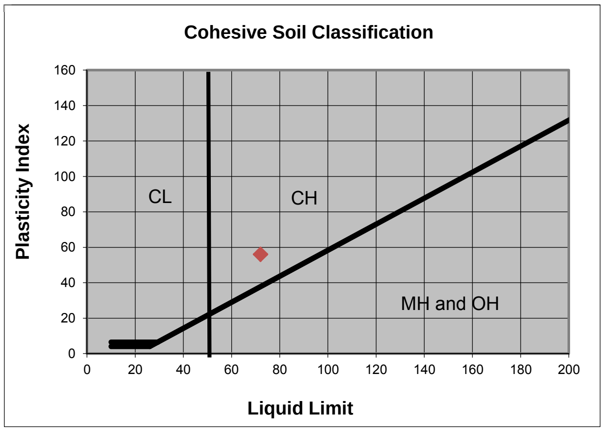

Plastic Limit

Sample Number	4	5		
W_C+S_W (g)	25.53	25.82		
W_C+S_D (g)	24.87	25.11		
W_C (g)	20.81	20.71		
S_D (g)	4.06	4.40		
W_{H2O} (g)	0.66	0.71		
Moisture Content (%)	16.26	16.14		

Summary

% < #200 =	**86.4**
Liquid Limit =	**72**
Plastic Limit =	**16**
Plasticity Index =	**56**

W_C = Weight of Container
S_W = Weight of Wet Sample
S_D = Weight of Dry Sample

$$\text{Moisture Content (\%)} = \frac{W_{H_2O}}{S_D} * 100$$

σ = 0.06

MADRID ENGINEERING GROUP, INC.
2030 State Road 60 East
Bartow, Florida 33830
863/533-9007 FAX: 863/533-8997

ATTERBERG LIMITS DETERMINATION AASHTO T89/90

Project Number: 12818
Project Name: Gibson Oaks WPF
Project Location: Lakeland
Client: Carollo

MEG Report Number: 12818-SPT-3
Date Sampled: 11/21/2017
Date Tested: 11/29/2017
Technician: MS

Sample Number: SPT-3
Soil Description: silty sand

Sample Location: 28.5 TO 30'
USCS Code: SM

Liquid Limit					
Sample Number	11	H	L		
W_C+S_W (g)	33.35	28.01	28.85		
W_C+S_D (g)	31.01	26.30	26.82		
W_C (g)	20.94	20.77	20.83		
S_D (g)	10.07	5.53	5.99		
W_{H2O} (g)	2.34	1.71	2.03		
Number of Blows	34	20	15		
Moisture Content (%)	23.24	30.92	33.89		

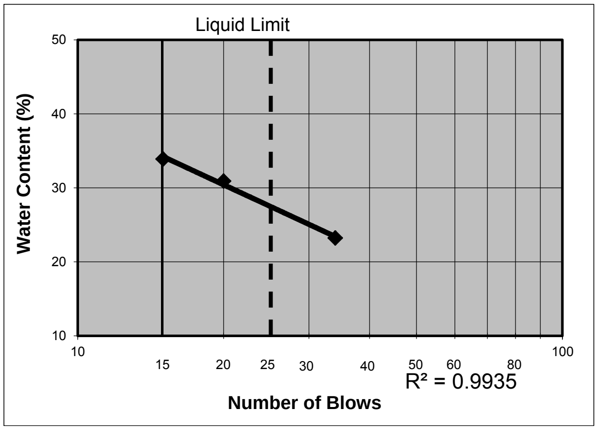

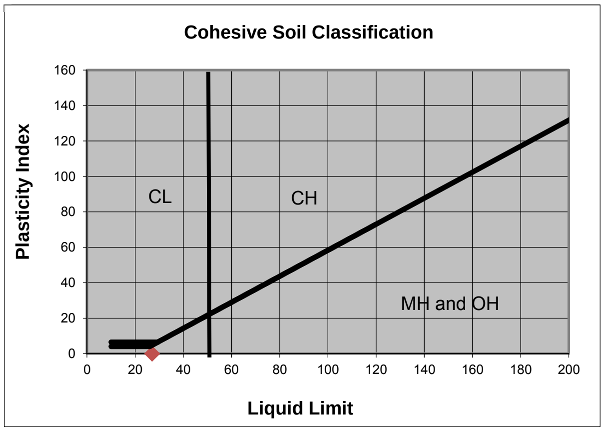

Plastic Limit				
Sample Number	F	101		
W_C+S_W (g)	26.15	26.22		
W_C+S_D (g)	25.02	25.22		
W_C (g)	20.73	21.55		
S_D (g)	4.29	3.67		
W_{H2O} (g)	1.13	1.00		
Moisture Content (%)	26.34	27.25		

Summary	
% < #200 =	**37.1**
Liquid Limit =	**27**
Plastic Limit =	**27**
Plasticity Index =	**0**

W_C = Weight of Container
S_W = Weight of Wet Sample
S_D = Weight of Dry Sample

$$\text{Moisture Content (\%)} = \frac{W_{H_2O}}{S_D} * 100$$

σ = 0.45

MADRID ENGINEERING GROUP, INC.
2030 State Road 60 East
Bartow, Florida 33830
863/533-9007 FAX: 863/533-8997

ATTERBERG LIMITS DETERMINATION AASHTO T89/90

Project Number: 12818
Project Name: Gibson Oaks WPF
Project Location: Lakeland
Client: Carollo

MEG Report Number: 12818-SPT-4
Date Sampled: 11/21/2017
Date Tested: 12/1/2017
Technician: WG

Sample Number: SPT-4
Soil Description: highly plastic very sandy clay

Sample Location: 38.5 TO 40'
USCS Code: CH

Liquid Limit

Sample Number	302	309	314		
W_C+S_W (g)	30.76	28.16	28.68		
W_C+S_D (g)	24.79	22.56	22.72		
W_C (g)	14.44	14.18	14.31		
S_D (g)	10.35	8.38	8.41		
W_{H2O} (g)	5.97	5.60	5.96		
Number of Blows	35	23	15		
Moisture Content (%)	57.68	66.83	70.87		

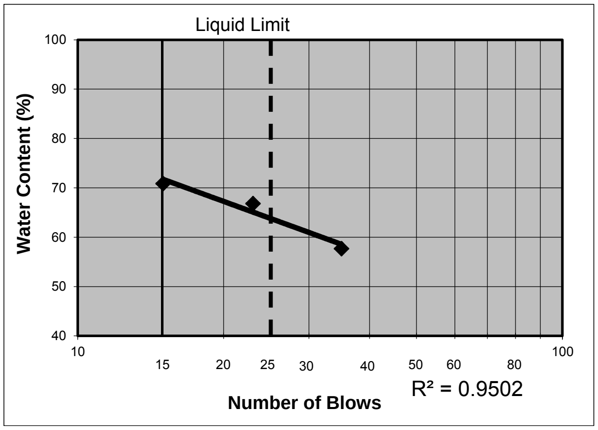

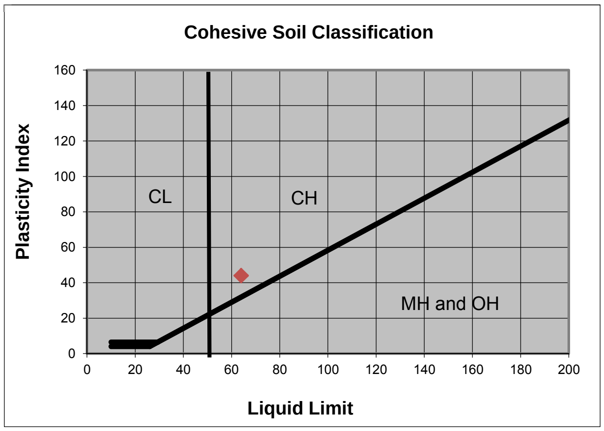

Plastic Limit

Sample Number	308	1941		
W_C+S_W (g)	15.97	16.07		
W_C+S_D (g)	15.68	15.76		
W_C (g)	14.26	14.23		
S_D (g)	1.42	1.53		
W_{H2O} (g)	0.29	0.31		
Moisture Content (%)	20.42	20.26		

Summary	
% < #200 =	**66.1**
Liquid Limit =	**64**
Plastic Limit =	**20**
Plasticity Index =	**44**

W_C = Weight of Container
S_W = Weight of Wet Sample
S_D = Weight of Dry Sample

$$\text{Moisture Content (\%)} = \frac{W_{H_2O}}{S_D} * 100$$

σ = 0.08

MADRID ENGINEERING GROUP, INC.
2030 State Road 60 East
Bartow, Florida 33830
863/533-9007   FAX: 863/533-8997

ASTM D2434-68 CONSTANT HEAD PERMEABILITY

Project Number: 12818
Date Tested: 11/30/2017
Project Name: Gibson Oaks WPF
Tested By: WG
Project Location: Lakeland
Client: Carollo

Boring Number: TP-1 Hor Shelby
Sample Interval: 2 TO 2'
Soil Description: Gray sand
USCS Code: SP
22.56 %
< #200 sieve: 1.4 %
Post-Test Moisture (From -200): 22.6 %
Natural Moisture: 2.9 %

Unit weight determination

Weight of in-situ soil: 1036.69 g
Weight of post-test soil: 1167.49 g
Weight of soil dry: 952.28 g
Diameter of Permeameter: 7.61 cm
Height of soil in Permeameter: 14.99 cm
Area of soil in Permeameter: 45.48 cm^2
Post-Test Unit Weight of soil: 1.71 g/cm3

Sample Density

106.9 pcf (post-test)
94.9 pcf (in-situ)
87.2 pcf (dry)

Permeability determination

Length of soil in Permeameter, ***l***: 14.99 cm
Cross sectional Area, ***A***: 45.48 cm^2

Trial No.	Head, h (cm)	Flow, Q_{out} (cm^3)	Time, t (s)	Temp, T (°C)	Permeability at T, k_T (cm/s)	Ratio of Viscosity, η $\eta_T:\eta_{20°C}$	Hydraulic Gradient, i	Velocity, v (cm/sec)	Permeability at 20°C, $k_{20°C}$ (cm/s)
1	13	524.76	900	23.9	1.48E-02	0.9311	0.86724483	1.28E-02	1.38E-02
2	18	532.41	900	23.9	1.08E-02	0.9311	1.20080053	1.30E-02	1.01E-02
3	23	576.13	900	23.8	9.17E-03	0.9311	1.53435624	1.41E-02	8.54E-03
4	33	805.94	900	23.9	8.94E-03	0.9311	2.20146765	1.97E-02	8.33E-03
5									

Average Permeability: 1.02E-02 cm/s **14.4 in/hr**

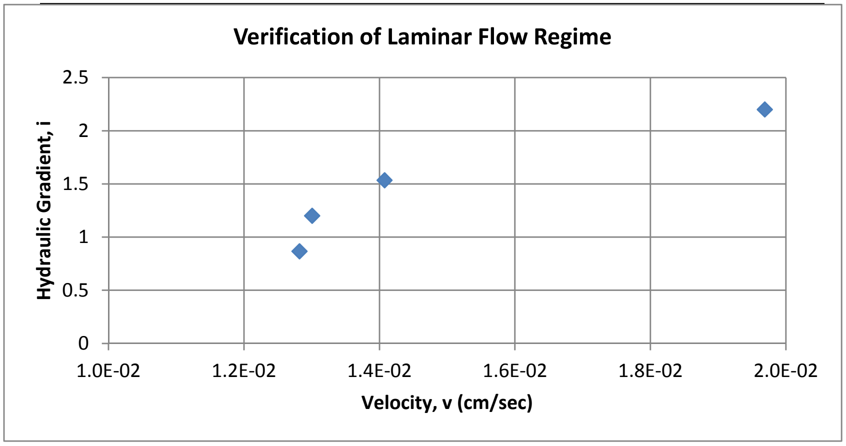

MADRID ENGINEERING GROUP, INC.

2030 State Road 60 East
Bartow, Florida 33830
863/533-9007   FAX: 863/533-8997

ASTM D2434-68 CONSTANT HEAD PERMEABILITY

Project Number: 12818
Date Tested: 11/30/2017
Project Name: Gibson Oaks WPF
Tested By: WG
Project Location: Lakeland
Client: Carollo

Boring Number: TP-1 Vert Shelby
Sample Interval: 2 TO 2.5'
Soil Description: Gray sand
USCS Code: SP
22.25 %
< #200 sieve: 4.7 %
Post-Test Moisture (From -200): 22.3 %
Natural Moisture: 12.5 %

Unit weight determination

Weight of in-situ soil: 1131.88 g
Weight of post-test soil: 1197.88 g
Weight of soil dry: 979.46 g
Diameter of Permeameter: 7.62 cm
Height of soil in Permeameter: 14.67 cm
Area of soil in Permeameter: 45.60 cm^2
Post-Test Unit Weight of soil: 1.79 g/cm3

Sample Density

111.8 pcf (post-test)
105.6 pcf (in-situ)
91.4 pcf (dry)

Permeability determination

Length of soil in Permeameter, ***l***: 14.67 cm
Cross sectional Area, ***A***: 45.60 cm^2

Trial No.	Head, ***h*** (cm)	Flow, Q_{out} (cm^3)	Time, ***t*** (s)	Temp, ***T*** (°C)	Permeability at ***T***, k_T (cm/s)	Ratio of Viscosity, η η_T:$\eta_{20°C}$	Hydraulic Gradient, ***i***	Velocity, ***v*** (cm/sec)	Permeability at 20°C, $k_{20°C}$ (cm/s)
1	13	40.05	900	23.9	1.10E-03	0.9311	0.88616224	9.76E-04	1.03E-03
2	23	116.26	900	23.9	1.81E-03	0.9311	1.56782549	2.83E-03	1.68E-03
3	26	130.24	900	23.8	1.79E-03	0.9311	1.77232447	3.17E-03	1.67E-03
4	30	197.1	900	23.9	2.35E-03	0.9311	2.04498978	4.80E-03	2.19E-03
5									

Average Permeability: 1.64E-03 cm/s **2.3 in/hr**

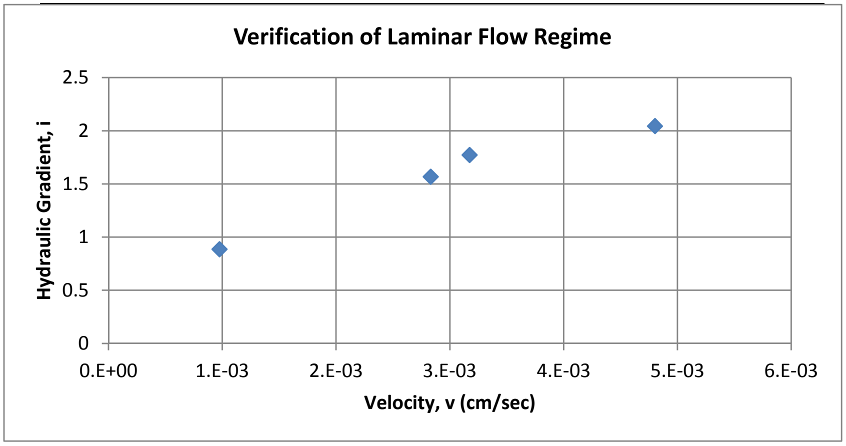

MADRID ENGINEERING GROUP, INC.
2030 State Road 60 East
Bartow, Florida 33830
863/533-9007   FAX: 863/533-8997

ASTM D2434-68 CONSTANT HEAD PERMEABILITY

Project Number: 12818
Project Name: Gibson Oaks WPF
Project Location: Lakeland
Client: Carollo

Date Tested: 11/30/2017
Tested By: WG

Boring Number: TP-2 Hor Shelby
Soil Description: Gray sand
25.75 %

Sample Interval: 2 TO 2'
USCS Code: SP
< #200 sieve: 2.2 %
Post-Test Moisture (From -200): 25.8 %
Natural Moisture: 11.4 %

Unit weight determination

Weight of in-situ soil: 1173.84 g
Weight of post-test soil: 1208.02 g
Weight of soil dry: 960.27 g
Diameter of Permeameter: 7.67 cm
Height of soil in Permeameter: 14.81 cm
Area of soil in Permeameter: 46.20 cm^2
Post-Test Unit Weight of soil: 1.77 g/cm3

Sample Density

110.2 pcf (post-test)
107.1 pcf (in-situ)
87.6 pcf (dry)

Permeability determination

Length of soil in Permeameter, ***l***: 14.81 cm
Cross sectional Area, ***A***: 46.20 cm^2

Trial No.	Head, ***h*** (cm)	Flow, Q_{out} (cm^3)	Time, ***t*** (s)	Temp, ***T*** (°C)	Permeability at ***T***, k_T (cm/s)	Ratio of Viscosity, $\eta_T:\eta_{20°C}$	Hydraulic Gradient, ***i***	Velocity, ***v*** (cm/sec)	Permeability at 20°C, $k_{20°C}$ (cm/s)
1	8	30.01	900	28.9	1.34E-03	0.8318	0.54017556	7.22E-04	1.11E-03
2	17	150.63	900	28.9	3.16E-03	0.8318	1.14787306	3.62E-03	2.62E-03
3	29.5	253.73	900	28.9	3.06E-03	0.8318	1.99189737	6.10E-03	2.55E-03
4	36	300.71	900	28.8	2.97E-03	0.8318	2.43079001	7.23E-03	2.47E-03
5									

Average Permeability: 2.19E-03 cm/s **3.1 in/hr**

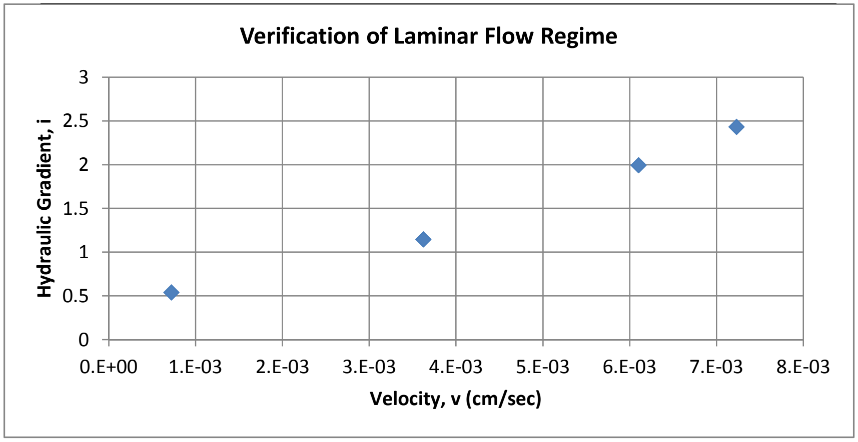

MADRID ENGINEERING GROUP, INC.
2030 State Road 60 East
Bartow, Florida 33830
863/533-9007 FAX: 863/533-8997

ASTM D2434-68 CONSTANT HEAD PERMEABILITY

Project Number: 12818
Project Name: Gibson Oaks WPF
Project Location: Lakeland
Client: Carollo
Date Tested: 11/30/2017
Tested By: WG

Boring Number: TP-2 Vert Shelby
Soil Description: Gray sand
21.07 %
Sample Interval: 2 TO 2.5'
USCS Code: SP
< #200 sieve: 2.7 %
Post-Test Moisture (From -200): 21.1 %
Natural Moisture: 16.3 %

Unit weight determination

Weight of in-situ soil: 1214.84 g
Weight of post-test soil: 1225.36 g
Weight of soil dry: 1011.86 g
Diameter of Permeameter: 7.58 cm
Height of soil in Permeameter: 15.17 cm
Area of soil in Permeameter: 45.13 cm^2
Post-Test Unit Weight of soil: 1.79 g/cm3

Sample Density

111.7 pcf (post-test)
110.8 pcf (in-situ)
92.3 pcf (dry)

Permeability determination

Length of soil in Permeameter, ***l***: 15.17 cm
Cross sectional Area, ***A***: 45.13 cm^2

Trial No.	Head, ***h*** (cm)	Flow, Q_{out} (cm^3)	Time, ***t*** (s)	Temp, ***T*** (°C)	Permeability at ***T***, k_T (cm/s)	Ratio of Viscosity, $\eta_T : \eta_{20°C}$	Hydraulic Gradient, ***i***	Velocity, ***v*** (cm/sec)	Permeability at 20°C, $k_{20°C}$ (cm/s)
1	8	132.42	900	28.9	6.18E-03	0.8318	0.52735662	3.26E-03	5.14E-03
2	17	311.51	900	28.9	6.84E-03	0.8318	1.12063283	7.67E-03	5.69E-03
3	26.5	438.39	900	28.9	6.18E-03	0.8318	1.74686882	1.08E-02	5.14E-03
4	37.5	536.25	900	28.8	5.34E-03	0.8318	2.47198418	1.32E-02	4.44E-03
5									

Average Permeability: 5.10E-03 cm/s **7.2 in/hr**

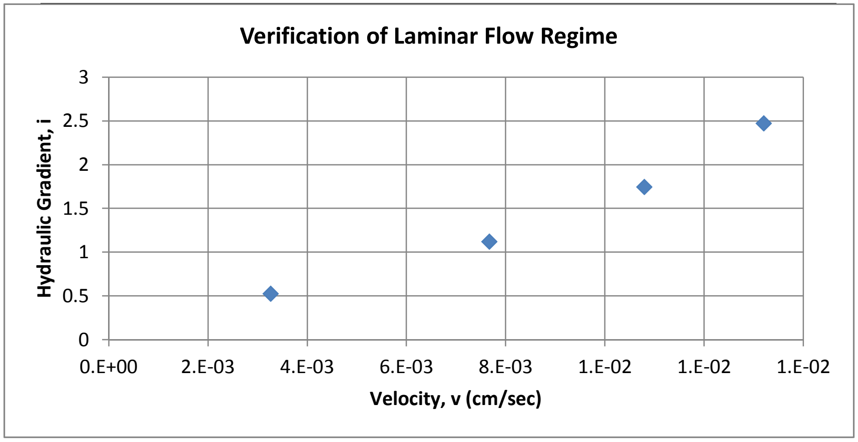

APPENDIX C

TABLE 1
SETTLEMENT ESTIMATE SUMMARY
1 MG GALLON WATER STORAGE TANK, GIBSON OAKS WPF

Boring No./ Location	**Total Settlement (in)**	**Settlement in Clayey Soils (in)**	**Percent Immediate Settlement**	**Total Immediate Settlement (in)**	**Remarks**
Tank Floor:					
SPT-1 (center)	5.6	3.7	30%	1.9	
SPT-2 (North Edge)	5.5	4.4	20%	1.1	
SPT-3 (SE Edge)	10.7	9.4	15%	1.3	
SPT-4 (SW Edge)	7.8	6.1	20%	1.7	

Max. Differential (center-to-edge):	5.1	Max. Differential (center-to-edge) due to Immediate Settlement:	0.8	inches
Min. Differential (center-to-edge):	0.1	Max. Differential (center-to-edge) due to clayey soil Settlement:	5.7	inches
Uniform Settlement of Entire Tank:	5.5	Max. Planar Tilt (edge-to-edge):	5.2	inches

Notes:

1. Settlements presented herein are estimates only based on boring conditions encountered and a uniform floor load of 1600 psf. Actual settlements measured in the field are likely to vary.

2 . Immediate settlements likely to occur during loading; some rebound during unloading may also be experienced.

3 . It is noted that "Clayey Soil" settlements are for both clayey sand and clay soils encountered. Although these clayey sand settlements are not included in the "Immediate Settlement" estimates it is generally anticipated that the clayey sand portion of the settlements will occur relatively quickly after loading (on the order of weeks) however a majority of the long-term settlement is due to clay which may take a year or more for settlement to be mostly complete.

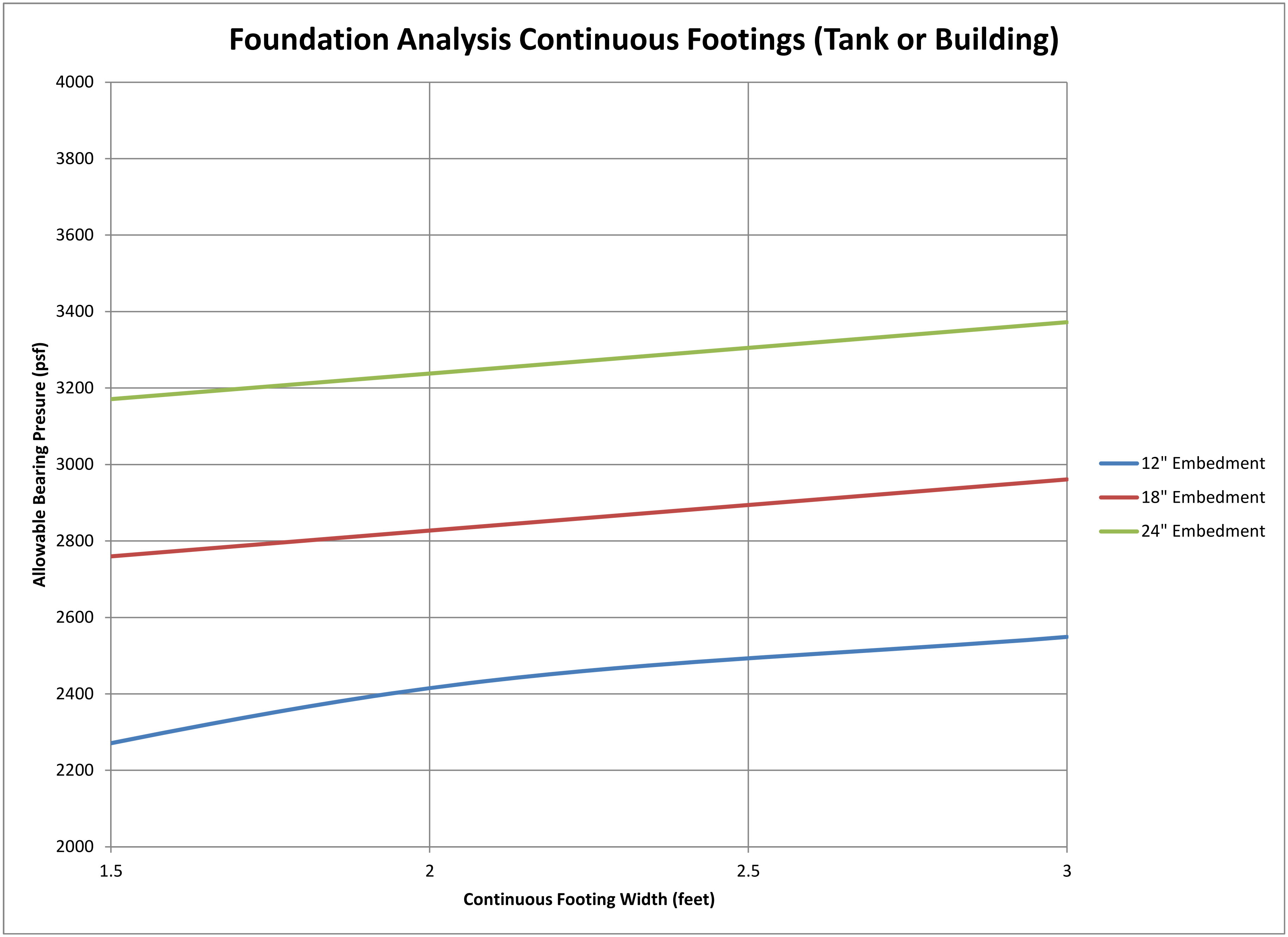
Foundation Analysis Continuous Footings (Tank or Building)
Allowable Bearing Presure (psf)
4000
3800
3600
3400
3200
3000
2800
2600
2400
2200
2000
1.5
2
2.5
3
Continuous Footing Width (feet)
12" Embedment
18" Embedment
24" Embedment

POLK COUNTY

GIBSON OAKS WATER PRODUCTION FACILITY

BID SET

APPENDIX A4

ENVIRONMENTAL TECHNICAL MEMORANDUM

Environmental Technical Memorandum

Gibson Oaks Water Production Facility

Polk County, Florida

Prepared for

Carollo Engineers, Inc.
10117 Princess Palm Ave
Suite 340
Tampa, Florida 33610

Prepared by

RK&K
14055 Riveredge Drive
Suite 130
Tampa, Florida 33637

August 2019

Table of Contents

1. Introduction 1
    1.1 Background 1
    1.2 Project Location and Description 1
2. Surface Waters (Including Wetlands) 4
3. Wildlife and Listed Species 7
4. References 13

Figures

Figure 1 - Project Location 2
Figure 2 - Land Use and Cover Data 3
Figure 3 - Wetland A Limits 5
Figure 4 - View from WLA Western Edge Facing East 6
Figure 5 - WLA Western Edge Facing Southeast 6
Figure 6 – FWS Designated Skink Soils 9

Tables

Table 1 - Listed Species with FWS Consultation Area Overlapping the Gibson Oaks Project Area..7

1. Introduction

1.1 Background

This technical memorandum has been prepared to aid Carollo Engineers and Polk County Utilities in the development of the proposed Gibson Oaks Water Production Facility (WPF). Under subcontract to Carollo Engineers, Rummel, Klepper & Kahl, LLP (RK&K) has conducted a review of current environmental conditions at the proposed WPF site. The purpose of this review was to identify potential environmental issues associated with wetlands, listed species, and other wildlife that may be present within the project area. These reviews include assessments of surface water features and the potential presence of state and federal listed species at the site. The assessment is based on information gathered during a desk-top analysis of aerial photography, soils, topography, and land use/vegetative cover data. The assessment also included field reviews conducted by RK&K environmental scientists on August 22, 2017, January 22, 2018, and February 4, 2019, and a wetland delineation conducted on January 15, 2019. The results of this review, as described in this technical memorandum, will be used by Carollo Engineers and CivilSurv as part of the environmental permit application package for the proposed facility.

1.2 Project Location and Description

The WPF site is located at 8251 East Tom Costine Road, Lakeland, Florida 33809 (**Figure 1**). According to the Polk County Property Appraiser's website, the parcel is owned by Polk County and covers 39.88 acres. The shape of the parcel approximates a square and the site is completely enclosed by barbed wire fence.

An unpaved driveway originating in the northwest corner of the parcel leads south to a house on the property which lies about halfway down the western border. East of the house is a pole barn, which has a gate to a fenced-in path for the movement of cattle. East of this path, a large freshwater marsh covers a majority of the property, running from the northeast corner to just above the southwest corner, covering the southeastern side of the diagonal it creates. An upland forested occurs south of this wetland in the southeastern corner of the parcel. Generalized land use and cover of the Gibson Oaks site is presented in **Figure 2.**

The upland portion of the site northwest of the wetland was previously grazed by cattle and is dominated by upland grasses with scattered pine stands that have a blackberry shrub layer.

According to topographic data from the U.S. Geological Survey (USGS), elevations across the project site range from 125 feet to 135 feet (USGS 2015).

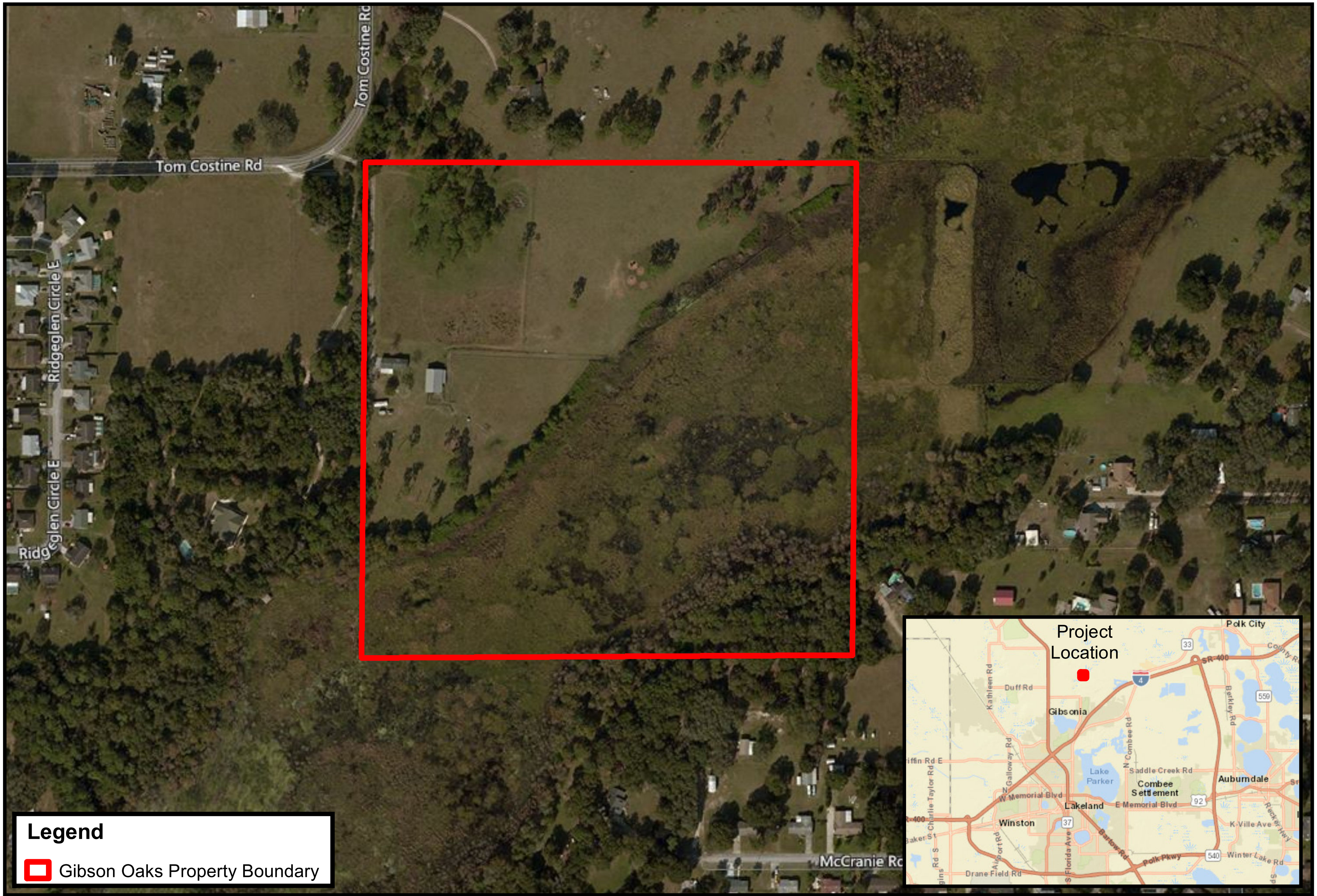

Gibson Oaks
Water Production Facility
Polk County Utilities

FIGURE 1
PROJECT LOCATION

0 350 700 Feet

1 inch = 350 feet

N

POLK COUNTY

Gibson Oaks
Water Production Facility
Polk County Utilities

FIGURE 2
Land Use and Cover Data

0 350 700 Feet
1 inch = 350 feet

N

2. Surface Waters (Including Wetlands)

A portion of a large wetland occurs on the Gibson Oaks WPF parcel. The western limits of this wetland were delineated on January 15, 2019 in conformance with the federal and state criteria promulgated in the *Corps of Engineers Wetlands Delineation Manual* (USACE 1987), the *Regional Supplement to the Corps of Engineers Wetlands Delineation Manual: Atlantic and Gulf Coastal Plain Region: Version 2* (USACE 2010), and the *Florida Wetlands Delineation Manual* (Gilbert et. al 1995). This wetland was identified as Wetland A and abbreviated as WLA. The delineated (and surveyed) limits of this wetland are provided in **Figure 3**.

The limits of Wetland A extend several thousand feet northeast and southwest of the Gibson Oaks parcel. The Gibson Oaks site generally drains southeast towards Wetland A. Wetland A drains northeast off the Gibson Oaks site for approximately one mile into a series of ponds. A series of ditches connected to the offsite portions of Wetland A likely make this wetland hydrologically contiguous with the Green Swamp.

Land use data (SWFWMD 2013) identifies this wetland as a freshwater marsh approximately 157 acres in size. Soft rush (*Juncus effusus*) is the dominant vegetative species within this wetland, with wiregrass species (*Aristida sp.*) interspersed throughout the wetland and red maple (*Acer rubrum*) and blackberry (*Rubus sp.*) occurring along the western edge. Cogongrass (*imperata cylindrica*) and torpedograss (*Panicum repens*) also grow along the upper edges of this wetland. **Figure 4** shows a view from the western edge of Wetland A facing east and **Figure 5** shows the western wetland line facing southeast.

This wetland is jurisdictional to both the U.S. Army Corps of Engineers (USACE) and the Florida Department of Environmental Protection (FDEP); however, it will not be impacted by the proposed project.

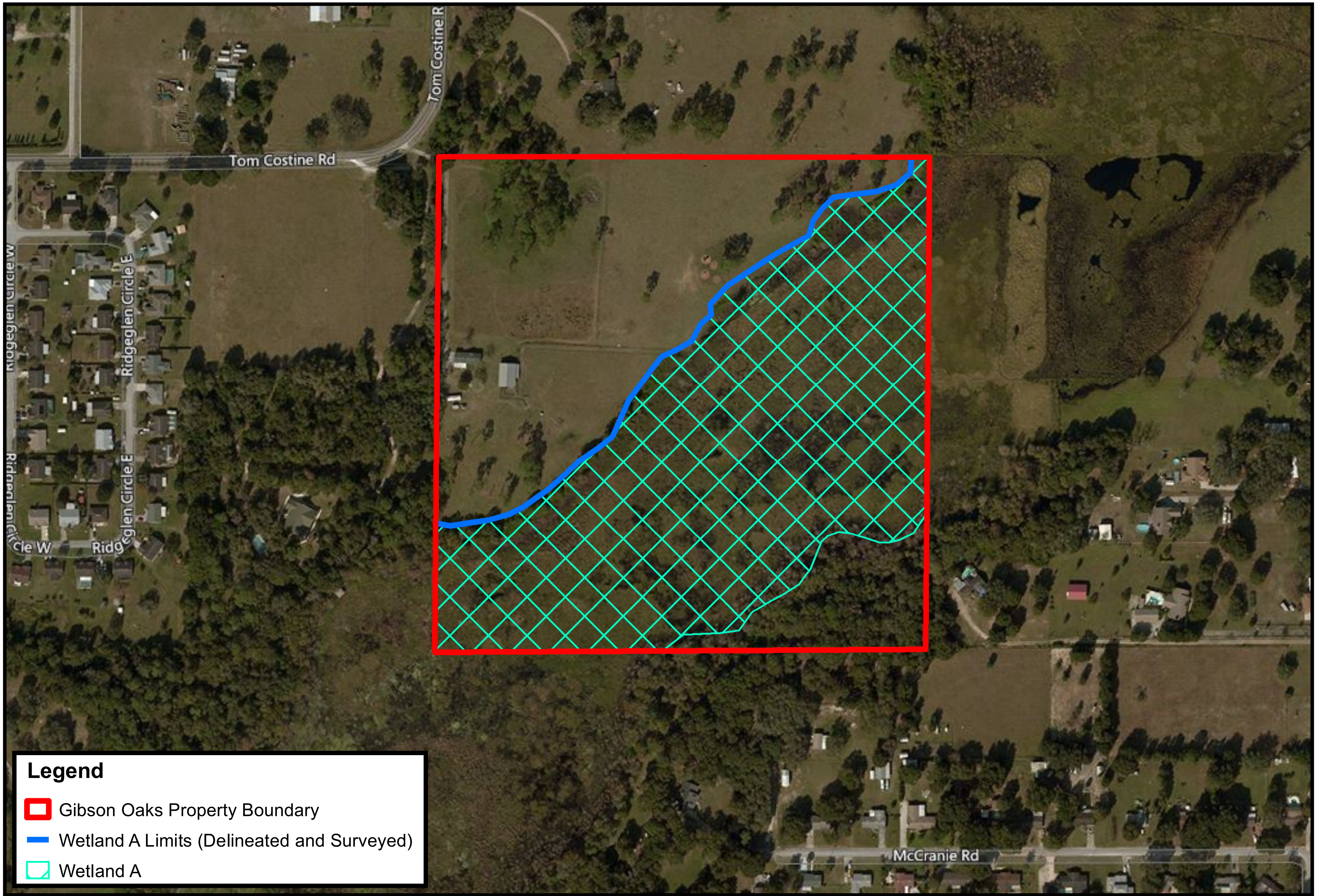

POLK COUNTY

Gibson Oaks
Water Production Facility
Polk County Utilities

FIGURE 3
Wetland A Limits

0 350 700 Feet
1 inch = 350 feet

N

Figure 4 - View from WLA Western Edge Facing East

Figure 5 - WLA Western Edge Facing Southeast

3. Wildlife and Listed Species

Much of the Gibson Oaks site is covered by mowed grass species such as bahiagrass (*Paspalum notatum*), and was formerly grazed by cattle. There are pine stands scattered across the site where the ground cover is composed mainly of blackberry (*Rubus sp.*). The freshwater marsh running through the parcel is the most desirable habitat located within the project area for wetland dependent species.

Bird species observed during the field reviews included black and turkey vultures, sandhill crane, white ibis, and American crow. The sandhill cranes and white ibis were observed foraging in the wetland on the property and in a small pond on the adjacent property to the north. No burrowing owls or nests of any other bird species were observed on the site.

The project area is located within the U.S. Fish and Wildlife Service (FWS) consultation area for several listed and one candidate species. Table 1 below provides the listing status of each of these species and the following text discusses the potential presence of each species on the parcel.

Table 1 - Listed Species with FWS Consultation Area Overlapping the Gibson Oaks Project Area

Common Name	Scientific Name	Federal Status[1]	State Status[2]
Eastern indigo snake	*Drymarchon corais couperi*	Threatened	Federally Threatened
Bluetail mole skink	*Eumeces egregious lividus*	Threatened	Federally Threatened
Sand skink	*Neoseps reynoldsi*	Threatened	Federally Threatened
Florida scrub-jay	*Aphelocoma coerulscens*	Threatened	Federally Threatened
Florida grasshopper sparrow	*Ammodramus savannarum floridanus*	Endangered	Federally Endangered
Crested caracara	*Caracara cheriway*	Threatened	Federally Threatened
Everglade snail kite	*Rostrhamus sociabilis plumbeus*	Endangered	Federally Endangered
Wood stork	*Mycteria Americana*	Threatened	Federally Threatened
Gopher tortoise	*Gopherus polyphemus*	Candidate	State Threatened

1. Listed pursuant to the Endangered Species Act of 1973, as amended and its implementing regulations under 50 CFR 17.

2. Florida's Endangered and Threatened Species, updated December 2018. Florida Fish and Wildlife Conservation Commission.

Eastern Indigo Snake – The eastern indigo snake is listed as threatened by the FWS due to extensive habitat loss, degradation, and fragmentation and population decline. No eastern indigo snakes were observed during either field review; however, they have been known to inhabit most upland habitat types throughout Florida, and even the fringes of wetlands (FWS 2004). The possible presence of gopher tortoises within the project area also increases the likelihood of eastern indigo snake presence, because eastern indigo snakes have been reported to occasionally inhabit gopher tortoise burrows. Although no open or active burrows were found on the site during any field reviews, should gopher tortoises become active on the site it could increase the potential for the eastern indigo snake to be present within the project area.

The FWS will require implementation of the latest version of the FWS *Standard Protection Measures for the Eastern Indigo Snake* (**Attachment A**) during any construction within suitable habitat as a protection measure for the species. If a gopher tortoise survey of the site shows potential snake refugia such as gopher tortoise burrows then the eastern indigo snake would need to be accounted for in the site permits. As such, when applying the project specifics to the *Eastern Indigo Snake Programmatic Effect Determination Key – Revised July 2017* (FWS 2017), an effect determination of "may affect, not likely to adversely affect" is anticipated for the project.

Bluetail Mole Skink and Sand Skink – Both of these species are listed as threatened by the FWS due to severe population decline and habitat degradation and loss. They are found only on the sandy ridges of central Florida; the bluetail mole skink in particular is limited to the Lake Wales Ridge where they inhabit xeric (very dry), well-drained areas such as sandhill or scrub habitat. These species require several inches of loose surficial sandy soil and/or leaf litter to allow for their movement.

No individuals or skink tracks of either species were observed during the field reviews of the Gibson Oaks site. Additionally, no intact scrub habitat exists on or adjacent to the Gibson Oaks site, due to the moderate development of the area. The project area is approximately 10 miles northwest of the nearest sand skink observation according to GIS data from the Florida Fish and Wildlife Conservation Commission (FWC 2017a). The Gibson Oaks site falls within the range of these species and is above the minimum elevation suitable for them (82 feet). A small portion of Tavares Fine Sand is mapped within the project area by the NRCS in the northwestern corner, where the driveway is located (**Figure 6**). Tavares fine sand is identified by the FWS as a suitable soil type for the bluetail mole skink and sand skink (FWS 2012). Based on current FWS protocol, when the location, elevation, and soil type are suitable, and the proposed action may disturb on-site soils then either: (1) a skink survey is necessary to determine if the site is occupied; or (2) presence may be assumed by the applicant and the appropriate avoidance, minimization, mitigation, or conservation measures should be implemented. The FWS will consider soils to be unsuitable for skink habitat if the soils have been significantly altered to the extent that they no longer represent a native condition.

The portion of Tavares Fine Sand within the Gibson Oaks parcel is approximately 0.38 acre in size. However, inspection during the field assessments showed that these soils were overgrown by grass which is mowed, are hard and compacted, and are divided by the existing driveway. It is our opinion that these features render this area of the property as unsuitable habitat for the bluetail mole skink and sand skink. Because there is no suitable habitat for the bluetail mole skink or sand skink within the Gibson Oaks Site, the project will have "no effect" on these skink species.

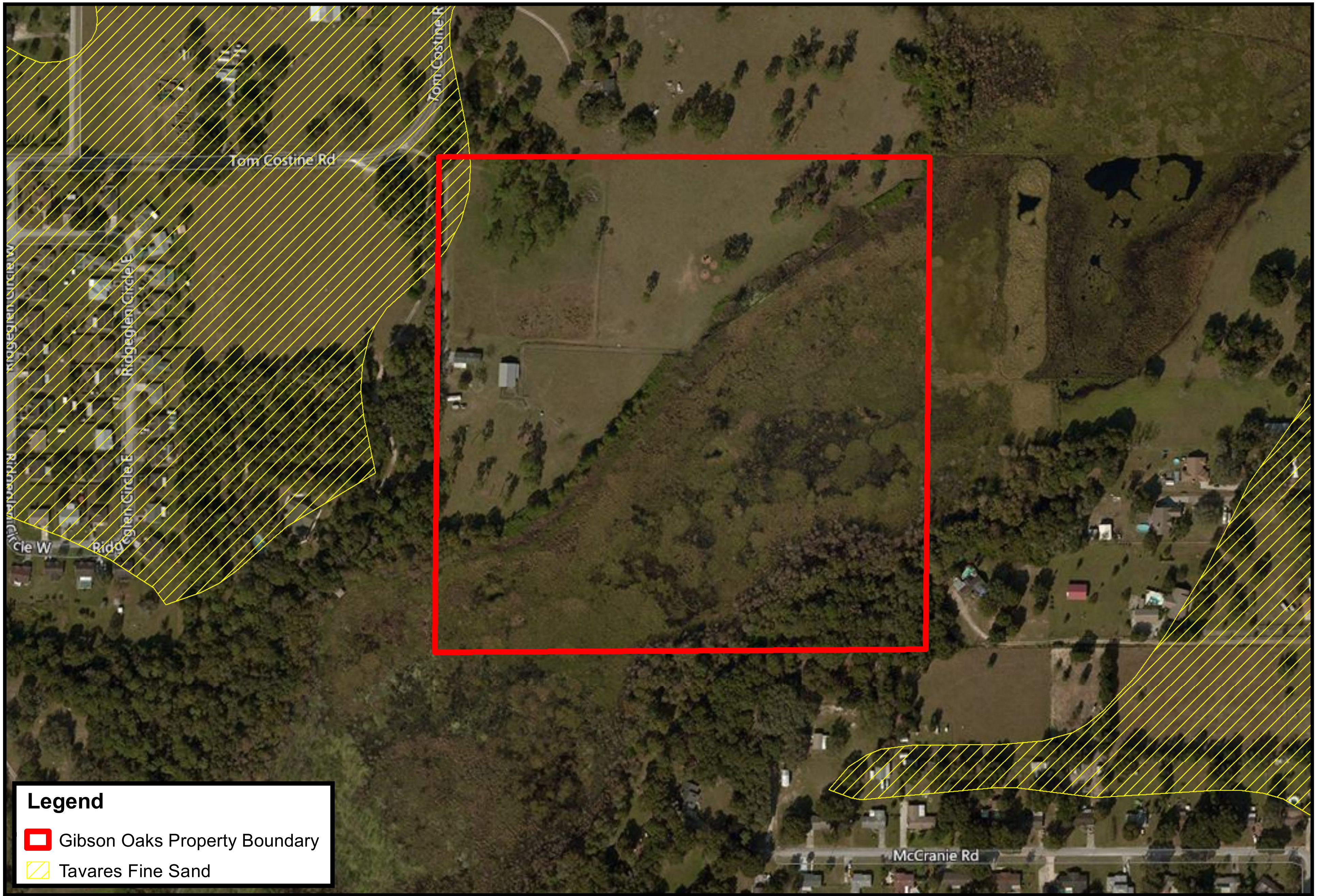

POLK COUNTY

Gibson Oaks
Water Production Facility
Polk County Utilities

FIGURE 6
FWS Designated Skink Soils

0 350 700 Feet
1 inch = 350 feet

N

Florida Scrub-jay – The Florida scrub-jay is listed as threatened by the FWS due to loss of habitat. This species prefers xeric oak habitats with well-drained sandy soils that are adapted to periodic drought and frequent fires. Three classes of scrub-jay habitat are defined by the FWS *Species Conservation Guidelines, South Florida, Florida Scrub-Jay* (FWS 2004):

> Type I – any upland plant community in which percent cover of the substrate by scrub oak species is 15 percent or more.
>
> Type II – any plant community, not meeting the definition of Type I habitat, in which one or more scrub oak species is represented.
>
> Type III – any upland or seasonally dry wetland within 400 meters (0.25 mile) of any area designated as Type I or Type II habitats.

The field reviews determined that no scrub oak species or scrub habitat occurs within or adjacent to the Gibson Oaks Site. Additionally, no scrub-jays were observed during any field reviews. Because of the lack of scrub-jay habitat within or adjacent to the project site the project will have “no effect” on the Florida scrub-jay.

Florida Grasshopper Sparrow – The Florida grasshopper sparrow is listed as endangered by the FWS due to habitat loss and degradation mainly related from the conversion of prairies to improved pastures and agriculture. The FWS estimates that fewer than 75 wild individuals of this species remain, with the current populations inhabiting conservation lands and still decreasing. Due to this severe population decline a captive breeding program was initiated in 2016, which is currently only sustaining about 50 birds.

There are no documented occurrences of the Florida grasshopper sparrow in the project area and the habitat present within the project boundary does not satisfy the fire-maintained, treeless, dry prairie which is required by this species. Additionally, no Florida grasshopper sparrows were observed during any field reviews. Due to these factors, this species is not expected to occur in the project area and the project will have “no effect” on the Florida grasshopper sparrow.

Crested Caracara – The Florida population of the crested caracara is listed as threatened by the FWS due to habitat loss, conversion, and fragmentation. The species prefers to live in dry or wet prairies and pasturelands which contain cabbage palm, their preferred nesting tree. The nearest documented nesting occurrence of this species is over 30 miles east of the project location.

Although there are cabbage palms present at the Gibson Oaks site, they are too small to be a suitable nesting tree for this species. Additionally, the cabbage palms that occur at the Gibson Oaks site are adjacent to suburban residential developments, which would likely deter this species from utilizing this area. Also, no caracara were observed during any field reviews. Because the caracara is not expected to occur in the project area and considering the lack of suitable habitat, the project is anticipated to have “no effect” on the crested caracara.

Everglade Snail Kite – The Everglade snail kite is listed as endangered by the FWS due to loss and degradation of wetlands. The Everglade snail kite along with its primary food source, apple snails, are wetland dependent species, so there is potential habitat for these species in the freshwater marsh at this site. During the field visits, no snail kites or apple snails were observed in or near any of the wetlands. Also, no modifications are planned to the wetland on the Gibson Oaks parcel. Because impacts to potential snail kite habitat are not anticipated, the project will have "no effect" on the Everglade snail kite.

Wood Stork – The wood stork is listed as threatened by the FWS due to a loss of foraging and nesting habitat for breeding colonies. This species colonizes inundated wetlands and these colonies are dependent on consistent foraging opportunities in wetlands within a core foraging area of the colony. In central peninsular Florida, the FWS defines a core foraging area as the area within an 18.6-mile radius of the nesting colony.

This project site is within the core foraging area for four wood stork nesting colonies per the latest FWS data from 2019. The wetland on the Gibson Oaks site likely serves as suitable foraging habitat for these colonies, but because the planned activities for the Gibson Oaks WPF will avoid impacts to the wetland, the project will have "no effect" on the wood stork.

Gopher Tortoise – The gopher tortoise is a state-listed threatened species and federal candidate species for listing. The reasons for these listings are habitat loss and rapid population decline.

During the first field review in August 2017, one gopher tortoise burrow was observed along the northern boundary of the parcel. This burrow was identified as abandoned, evidenced by overgrowth of grass over the burrow and an unmaintained burrow mouth. The mouth of this burrow had disappeared during subsequent field reviews, likely having been completely overgrown by grass due to inactivity.

Because gopher tortoises were historically present on this site, a pre-construction survey is required to determine the presence of gopher tortoises at that time and to acquire any necessary permits from FWC. This survey must be performed within 90 days prior to the start of construction. If the gopher tortoise permitting guidelines (FWC 2017b) are followed, there is "no adverse effect anticipated" on the gopher tortoise by the project.

Other Wildlife

State Listed Wetland Dependent Avian Species – Sandhill cranes were observed on the Gibson Oaks WPF site during the January field review. During that time of the year, the individuals observed could have either been the state threatened Florida sandhill crane (*Antigone canadensis pratensis*), or individuals of the non-listed migratory population. Regardless, the wetland on the Gibson Oaks WPF site provides suitable habitat for the Florida sandhill crane.

The Gibson Oaks site is also within the range of the little blue heron (*Egretta caerulea*), tricolored heron (*Egretta tricolor*), and roseate spoonbill (*Platalea ajaja*) of which are all listed as threatened by the FWC. Wetland A would also provide suitable habitat for each of these species. No nests of any of these species (including the sandhill crane) were observed during any project field reviews. Considering this and the lack of wetland impacts, there is “no effect anticipated” on these wetland dependent avian species.

Bald Eagle (*Haliaeetus leucocephalus*) – Per the most recent FWC eagle nest data (FWC 2017b), the nearest eagle nest is located over 2 miles from the Gibson Oaks site and no individuals were observed during either field visit. Additionally, project field reviews did not document any eagles or eagle nests at or adjacent to the Gibson Oaks site. If an eagle nest is located at the Gibson Oaks site prior to or during construction, coordination with FWS will be required.

4. References

FGDL. 2018. Florida Geographic Data Library. https://www.fgdl.org/metadataexplorer/explorer.jsp. Accessed January 2018.

FWC. 2016. Florida's Imperiled Species Management Plan. October 15, 2016. Florida Fish and Wildlife Conservation Commission. Tallahassee, Florida.

FWC. 2017a. Sand Skink Locations Florida. July 20, 2017. Florida Fish and Wildlife Conservation Commission. Tallahassee, Florida.

FWC. 2017b. Gopher Tortoise Permitting Guidelines (Revised January 2017). Florida Fish and Wildlife Conservation Commission. Tallahassee, Florida.

FWC. 2017c. Eagle Nesting Locations Florida 1998-2017. Florida Fish and Wildlife Conservation Commission. Tallahassee, Florida.

FWC. 2018. Florida Fish and Wildlife Conservation Commission Quick Maps. http://atoll.floridamarine.org/QuickMaps/. Accessed January 2018.

FWS. 2004. Species Conservation Guidelines, South Florida, Eastern Indigo Snake. Draft, May 25, 2004. U.S. Fish and Wildlife Service, Ecological Services Office. Vero Beach, Florida.

FWS. 2004. Species Conservation Guidelines, South Florida, Florida Scrub-jay. Draft, May 28, 2004. U.S. Fish and Wildlife Service, Ecological Services Office. Vero Beach, Florida.

FWS. 2012. Peninsular Florida Species Conservation and Consultation Guide, Sand Skink and Blue-tailed (Bluetail) Mole Skink. February 6, 2012. U.S. Fish and Wildlife Service, Ecological Services Office. Vero Beach, Florida.

FWS. 2016. Florida Southeast Connection Pipeline Biological Opinion. https://www.fws.gov/verobeach/SFESO/images/biologicalopinion/20160525_letter_Service%20to%20FERC_2014F0280%20FSC%20Pipeline.pdf. May 25, 2016. U.S. Fish and Wildlife Service, Ecological Services Office. Vero Beach, Florida. Accessed 24 January 2016.

FWS. 2017. Eastern Indigo Snake Programmatic Effect Determination Key – Revised July 2017. August 1, 2017. U.S. Fish and Wildlife Service, Ecological Services Office. Vero Beach, Florida.

FWS. 2019. WOST_Foraging_2019. May 15, 2019. U.S. Fish and Wildlife Service, Ecological Services Office. Vero Beach, Florida.

NRCS. 2015. Soil Survey Geographic (SSURGO) Database for Florida. November 2015. U.S. Department of Agriculture, Natural Resources Conservation Service. Gainesville, Florida.

SWFWMD. 2013. Land Use and Land Cover Database 2011. May 16, 2013. Southwest Florida Water Management District. Brooksville, Florida.

USACE. 1987. Corps of Engineers Wetlands Delineation Manual. January 1987. U.S. Army Corps of Engineers, Waterways Experiment Station. Vicksburg, Mississippi.

USACE. 2010. Regional Supplement to the Corps of Engineers Wetland Delineation Manual: Atlantic and Gulf Coastal Plain Region (Version 2.0). U.S. Army Corps of Engineers, Engineer Research and Development Center. Vicksburg, Mississippi.

USGS. 2015. Providence 7.5-minute U.S. Topographical Map. U.S. Geological Survey.

Attachment A

Standard Protection Measures for the Eastern Indigo Snake

STANDARD PROTECTION MEASURES FOR THE EASTERN INDIGO SNAKE
U.S. Fish and Wildlife Service
August 12, 2013

The eastern indigo snake protection/education plan (Plan) below has been developed by the U.S. Fish and Wildlife Service (USFWS) in Florida for use by applicants and their construction personnel. At least **30 days prior** to any clearing/land alteration activities, the applicant shall notify the appropriate USFWS Field Office via e-mail that the Plan will be implemented as described below (North Florida Field Office: jaxregs@fws.gov; South Florida Field Office: verobeach@fws.gov; Panama City Field Office: panamacity@fws.gov). As long as the signatory of the e-mail certifies compliance with the below Plan (including use of the attached poster and brochure), no further written confirmation or "approval" from the USFWS is needed and the applicant may move forward with the project.

If the applicant decides to use an eastern indigo snake protection/education plan other than the approved Plan below, written confirmation or "approval" from the USFWS that the plan is adequate must be obtained. At least 30 days prior to any clearing/land alteration activities, the applicant shall submit their unique plan for review and approval. The USFWS will respond via e-mail, typically within 30 days of receiving the plan, either concurring that the plan is adequate or requesting additional information. A concurrence e-mail from the appropriate USFWS Field Office will fulfill approval requirements.

The Plan materials should consist of: 1) a combination of posters and pamphlets (see **Poster Information** section below); and 2) verbal educational instructions to construction personnel by supervisory or management personnel before any clearing/land alteration activities are initiated (see **Pre-Construction Activities** and **During Construction Activities** sections below).

POSTER INFORMATION

Posters with the following information shall be placed at strategic locations on the construction site and along any proposed access roads (a final poster for Plan compliance, to be printed on 11" x 17" or larger paper and laminated, is attached):

DESCRIPTION: The eastern indigo snake is one of the largest non-venomous snakes in North America, with individuals often reaching up to 8 feet in length. They derive their name from the glossy, blue-black color of their scales above and uniformly slate blue below. Frequently, they have orange to coral reddish coloration in the throat area, yet some specimens have been reported to only have cream coloration on the throat. These snakes are not typically aggressive and will attempt to crawl away when disturbed. Though indigo snakes rarely bite, they should NOT be handled.

SIMILAR SNAKES: The black racer is the only other solid black snake resembling the eastern indigo snake. However, black racers have a white or cream chin, thinner bodies, and WILL BITE if handled.

LIFE HISTORY: The eastern indigo snake occurs in a wide variety of terrestrial habitat types throughout Florida. Although they have a preference for uplands, they also utilize some wetlands and agricultural areas. Eastern indigo snakes will often seek shelter inside gopher tortoise burrows and other below- and above-ground refugia, such as other animal burrows, stumps, roots, and debris piles. Females may lay from 4 - 12 white eggs as early as April through June, with young hatching in late July through October.

PROTECTION UNDER FEDERAL AND STATE LAW: The eastern indigo snake is classified as a Threatened species by both the USFWS and the Florida Fish and Wildlife Conservation Commission. "Taking" of eastern indigo snakes is prohibited by the Endangered Species Act without a permit. "Take" is defined by the USFWS as an attempt to kill, harm, harass, pursue, hunt, shoot, wound, trap, capture, collect, or engage in any such conduct. Penalties include a maximum fine of $25,000 for civil violations and up to $50,000 and/or imprisonment for criminal offenses, if convicted.

Only individuals currently authorized through an issued Incidental Take Statement in association with a USFWS Biological Opinion, or by a Section 10(a)(1)(A) permit issued by the USFWS, to handle an eastern indigo snake are allowed to do so.

IF YOU SEE A <u>LIVE</u> EASTERN INDIGO SNAKE ON THE SITE:

- Cease clearing activities and allow the live eastern indigo snake sufficient time to move away from the site without interference;
- Personnel must NOT attempt to touch or handle snake due to protected status.
- Take photographs of the snake, if possible, for identification and documentation purposes.
- Immediately notify supervisor or the applicant's designated agent, **and** the appropriate USFWS office, with the location information and condition of the snake.
- If the snake is located in a vicinity where continuation of the clearing or construction activities will cause harm to the snake, the activities must halt until such time that a representative of the USFWS returns the call (within one day) with further guidance as to when activities may resume.

IF YOU SEE A <u>DEAD</u> EASTERN INDIGO SNAKE ON THE SITE:

- Cease clearing activities and immediately notify supervisor or the applicant's designated agent, **and** the appropriate USFWS office, with the location information and condition of the snake.
- Take photographs of the snake, if possible, for identification and documentation purposes.
- Thoroughly soak the dead snake in water and then freeze the specimen. The appropriate wildlife agency will retrieve the dead snake.

Telephone numbers of USFWS Florida Field Offices to be contacted if a live or dead eastern indigo snake is encountered:

North Florida Field Office – (904) 731-3336
Panama City Field Office – (850) 769-0552
South Florida Field Office – (772) 562-3909

PRE-CONSTRUCTION ACTIVITIES

1. The applicant or designated agent will post educational posters in the construction office and throughout the construction site, including any access roads. The posters must be clearly visible to all construction staff. A sample poster is attached.

2. Prior to the onset of construction activities, the applicant/designated agent will conduct a meeting with all construction staff (annually for multi-year projects) to discuss identification of the snake, its protected status, what to do if a snake is observed within the project area, and applicable penalties that may be imposed if state and/or federal regulations are violated. An educational brochure including color photographs of the snake will be given to each staff member in attendance and additional copies will be provided to the construction superintendent to make available in the onsite construction office (a final brochure for Plan compliance, to be printed double-sided on 8.5” x 11” paper and then properly folded, is attached). Photos of eastern indigo snakes may be accessed on USFWS and/or FWC websites.

3. Construction staff will be informed that in the event that an eastern indigo snake (live or dead) is observed on the project site during construction activities, all such activities are to cease until the established procedures are implemented according to the Plan, which includes notification of the appropriate USFWS Field Office. The contact information for the USFWS is provided on the referenced posters and brochures.

DURING CONSTRUCTION ACTIVITIES

1. During initial site clearing activities, an onsite observer may be utilized to determine whether habitat conditions suggest a reasonable probability of an eastern indigo snake sighting (example: discovery of snake sheds, tracks, lots of refugia and cavities present in the area of clearing activities, and presence of gopher tortoises and burrows).

2. If an eastern indigo snake is discovered during gopher tortoise relocation activities (i.e. burrow excavation), the USFWS shall be contacted within one business day to obtain further guidance which may result in further project consultation.

3. Periodically during construction activities, the applicant’s designated agent should visit the project area to observe the condition of the posters and Plan materials, and replace them as needed. Construction personnel should be reminded of the instructions (above) as to what is expected if any eastern indigo snakes are seen.

POST CONSTRUCTION ACTIVITIES

Whether or not eastern indigo snakes are observed during construction activities, a monitoring report should be submitted to the appropriate USFWS Field Office within 60 days of project completion. The report can be sent electronically to the appropriate USFWS e-mail address listed on page one of this Plan.

POLK COUNTY

GIBSON OAKS WATER PRODUCTION FACILITY

BID SET

APPENDIX A5

LANDSCAPE AND IRRIGATION AS-BUILTS

GIBSON OAKS
WTF IRRIGATION
AS BUILT PLAN
BY EVOLVE
CONTRACTING INC
4-18-18

This document, together with the concepts and designs presented herein, as an instrument of service, is intended only for the specific purpose and client for which it was prepared. Reuse of and improper reliance on this document without construction administration or written authorization and adaptation by Wallis Murphey Boyington Architects, Inc. shall be without liability to Wallis Murphey Boyington Architects, Inc.

WMB
(ARCHITECTURE)
ROI SOLUTIONS.
110 South Kentucky Avenue
Lakeland, Florida 33801
863.687.3575
wmb-roi.com
Corp. Lic. No. AAC001165

CONSULTANTS:

DATE:

PROJECT NAME:

GIBSON OAKS
POLK COUNTY, FL

ISSUED DATES:

MARK	DATE	DESCRIPTION

DR. BY: M.M.
QAL:
CHKD. BY: M.C.
QAM: M.C.
DATE: 06-17-17
SCALE: 1" = 50'-0"
PROJ. NO.:
DWG TITLE:
IRRIGATION SITE PLAN

DWG. No.:
IR-1

KNOW WHAT'S BELOW
ALWAYS CALL 811
BEFORE YOU DIG
It's fast, It's free, It's the law.
Call 811 two business days before digging

IMPORTANT NOTE:
THIS SCHEMATIC IS BASED ON AN AERIAL PHOTO ONLY AND IS NOT 100% ACCURATE. CONTRACTOR SHALL FIELD VERIFY ALL EXISTING CONDITIONS, PRIOR TO COMMENCEMENT OF WORK.

0' 25' 50' 100' 150'
SCALE: 1" = 50'-0"
N

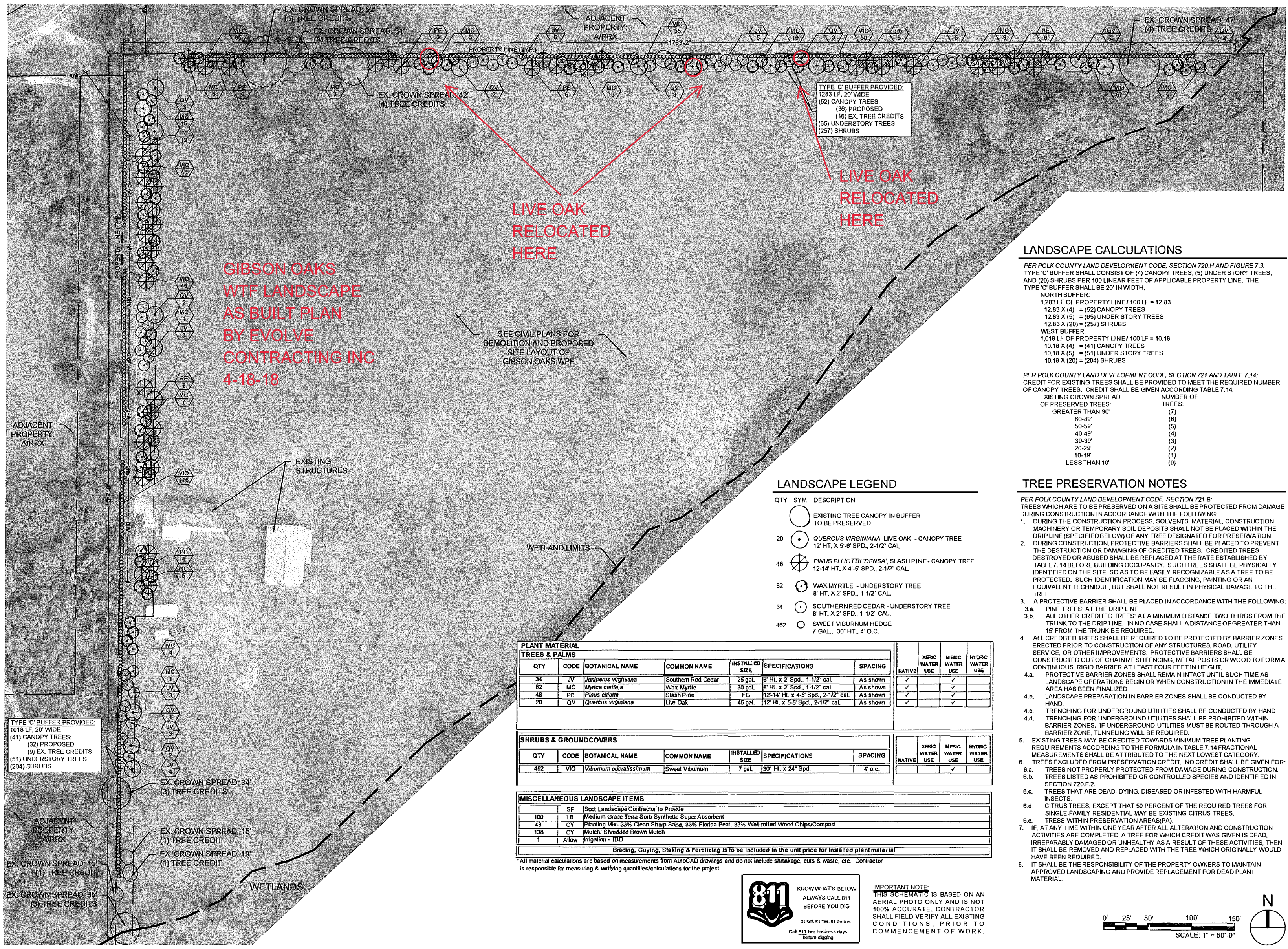

LANDSCAPE CALCULATIONS

PER POLK COUNTY LAND DEVELOPMENT CODE, SECTION 720.H AND FIGURE 7.3:
TYPE 'C' BUFFER SHALL CONSIST OF (4) CANOPY TREES, (5) UNDER STORY TREES, AND (20) SHRUBS PER 100 LINEAR FEET OF APPLICABLE PROPERTY LINE. THE TYPE 'C' BUFFER SHALL BE 20' IN WIDTH.

NORTH BUFFER:
1,283 LF OF PROPERTY LINE / 100 LF = 12.83
12.83 X (4) = (52) CANOPY TREES
12.83 X (5) = (65) UNDER STORY TREES
12.83 X (20) = (257) SHRUBS
WEST BUFFER:
1,018 LF OF PROPERTY LINE / 100 LF = 10.18
10.18 X (4) = (41) CANOPY TREES
10.18 X (5) = (51) UNDER STORY TREES
10.18 X (20) = (204) SHRUBS

PER POLK COUNTY LAND DEVELOPMENT CODE, SECTION 721 AND TABLE 7.14:
CREDIT FOR EXISTING TREES SHALL BE PROVIDED TO MEET THE REQUIRED NUMBER OF CANOPY TREES. CREDIT SHALL BE GIVEN ACCORDING TABLE 7.14:

EXISTING CROWN SPREAD OF PRESERVED TREES:	NUMBER OF TREES:
GREATER THAN 90'	(7)
60-89'	(6)
50-59'	(5)
40-49'	(4)
30-39'	(3)
20-29'	(2)
10-19'	(1)
LESS THAN 10'	(0)

TREE PRESERVATION NOTES

PER POLK COUNTY LAND DEVELOPMENT CODE, SECTION 721.B:
TREES WHICH ARE TO BE PRESERVED ON A SITE SHALL BE PROTECTED FROM DAMAGE DURING CONSTRUCTION IN ACCORDANCE WITH THE FOLLOWING:

1. DURING THE CONSTRUCTION PROCESS, SOLVENTS, MATERIAL, CONSTRUCTION MACHINERY OR TEMPORARY SOIL DEPOSITS SHALL NOT BE PLACED WITHIN THE DRIP LINE (SPECIFIED BELOW) OF ANY TREE DESIGNATED FOR PRESERVATION.
2. DURING CONSTRUCTION, PROTECTIVE BARRIERS SHALL BE PLACED TO PREVENT THE DESTRUCTION OR DAMAGING OF CREDITED TREES. CREDITED TREES DESTROYED OR ABUSED SHALL BE REPLACED AT THE RATE ESTABLISHED BY TABLE 7.14 BEFORE BUILDING OCCUPANCY. SUCH TREES SHALL BE PHYSICALLY IDENTIFIED ON THE SITE SO AS TO BE EASILY RECOGNIZABLE AS A TREE TO BE PROTECTED. SUCH IDENTIFICATION MAY BE FLAGGING, PAINTING OR AN EQUIVALENT TECHNIQUE, BUT SHALL NOT RESULT IN PHYSICAL DAMAGE TO THE TREE.
3. A PROTECTIVE BARRIER SHALL BE PLACED IN ACCORDANCE WITH THE FOLLOWING:
   3.a. PINE TREES: AT THE DRIP LINE.
   3.b. ALL OTHER CREDITED TREES: AT A MINIMUM DISTANCE TWO THIRDS FROM THE TRUNK TO THE DRIP LINE. IN NO CASE SHALL A DISTANCE OF GREATER THAN 15' FROM THE TRUNK BE REQUIRED.
4. ALL CREDITED TREES SHALL BE REQUIRED TO BE PROTECTED BY BARRIER ZONES ERECTED PRIOR TO CONSTRUCTION OF ANY STRUCTURES, ROAD, UTILITY SERVICE, OR OTHER IMPROVEMENTS. PROTECTIVE BARRIERS SHALL BE CONSTRUCTED OUT OF CHAINMESH FENCING, METAL POSTS OR WOOD TO FORM A CONTINUOUS, RIGID BARRIER AT LEAST FOUR FEET IN HEIGHT.
   4.a. PROTECTIVE BARRIER ZONES SHALL REMAIN INTACT UNTIL SUCH TIME AS LANDSCAPE OPERATIONS BEGIN OR WHEN CONSTRUCTION IN THE IMMEDIATE AREA HAS BEEN FINALIZED.
   4.b. LANDSCAPE PREPARATION IN BARRIER ZONES SHALL BE CONDUCTED BY HAND.
   4.c. TRENCHING FOR UNDERGROUND UTILITIES SHALL BE CONDUCTED BY HAND.
   4.d. TRENCHING FOR UNDERGROUND UTILITIES SHALL BE PROHIBITED WITHIN BARRIER ZONES. IF UNDERGROUND UTILITIES MUST BE ROUTED THROUGH A BARRIER ZONE, TUNNELING WILL BE REQUIRED.
5. EXISTING TREES MAY BE CREDITED TOWARDS MINIMUM TREE PLANTING REQUIREMENTS ACCORDING TO THE FORMULA IN TABLE 7.14 FRACTIONAL MEASUREMENTS SHALL BE ATTRIBUTED TO THE NEXT LOWEST CATEGORY.
6. TREES EXCLUDED FROM PRESERVATION CREDIT. NO CREDIT SHALL BE GIVEN FOR:
   6.a. TREES NOT PROPERLY PROTECTED FROM DAMAGE DURING CONSTRUCTION.
   6.b. TREES LISTED AS PROHIBITED OR CONTROLLED SPECIES AND IDENTIFIED IN SECTION 720.F.2.
   6.c. TREES THAT ARE DEAD, DYING, DISEASED OR INFESTED WITH HARMFUL INSECTS.
   6.d. CITRUS TREES, EXCEPT THAT 50 PERCENT OF THE REQUIRED TREES FOR SINGLE-FAMILY RESIDENTIAL MAY BE EXISTING CITRUS TREES.
   6.e. TRESS WITHIN PRESERVATION AREAS(PA).
7. IF, AT ANY TIME WITHIN ONE YEAR AFTER ALL ALTERATION AND CONSTRUCTION ACTIVITIES ARE COMPLETED, A TREE FOR WHICH CREDIT WAS GIVEN IS DEAD, IRREPARABLY DAMAGED OR UNHEALTHY AS A RESULT OF THESE ACTIVITIES, THEN IT SHALL BE REMOVED AND REPLACED WITH THE TREE WHICH ORIGINALLY WOULD HAVE BEEN REQUIRED.
8. IT SHALL BE THE RESPONSIBILITY OF THE PROPERTY OWNERS TO MAINTAIN APPROVED LANDSCAPING AND PROVIDE REPLACEMENT FOR DEAD PLANT MATERIAL.

LANDSCAPE LEGEND

QTY	SYM	DESCRIPTION
	◯	EXISTING TREE CANOPY IN BUFFER TO BE PRESERVED
20	⊙	*QUERCUS VIRGINIANA*, LIVE OAK - CANOPY TREE 12' HT. X 5'-6' SPD., 2-1/2" CAL.
48	⊕	*PINUS ELLIOTTII 'DENSA'*, SLASH PINE - CANOPY TREE 12-14' HT. X 4'-5' SPD., 2-1/2" CAL.
82	⊙	WAX MYRTLE - UNDERSTORY TREE 8' HT. X 2' SPD., 1-1/2" CAL.
34	⊙	SOUTHERN RED CEDAR - UNDERSTORY TREE 8' HT. X 2' SPD., 1-1/2" CAL.
462	○	SWEET VIBURNUM HEDGE 7 GAL., 30" HT., 4' O.C.

PLANT MATERIAL

TREES & PALMS

QTY	CODE	BOTANICAL NAME	COMMON NAME	INSTALLED SIZE	SPECIFICATIONS	SPACING	NATIVE	XERIC WATER USE	MESIC WATER USE	HYDRIC WATER USE
34	JV	*Juniperus virginiana*	Southern Red Cedar	25 gal.	8' Ht. x 2' Spd., 1-1/2" cal.	As shown	✓		✓	
82	MC	*Myrica cerifera*	Wax Myrtle	30 gal.	8' Ht. x 2' Spd., 1-1/2" cal.	As shown	✓		✓	
48	PE	*Pinus elliottii*	Slash Pine	FG	12'-14' Ht. x 4-5' Spd., 2-1/2" cal.	As shown	✓		✓	
20	QV	*Quercus virginiana*	Live Oak	45 gal.	12' Ht. x 5-6' Spd., 2-1/2" cal.	As shown	✓		✓	

SHRUBS & GROUNDCOVERS

QTY	CODE	BOTANICAL NAME	COMMON NAME	INSTALLED SIZE	SPECIFICATIONS	SPACING	NATIVE	XERIC WATER USE	MESIC WATER USE	HYDRIC WATER USE
462	VIO	*Viburnum odoratissimum*	Sweet Viburnum	7 gal.	30" Ht. x 24" Spd.	4' o.c.			✓	

MISCELLANEOUS LANDSCAPE ITEMS

	SF	Sod: Landscape Contractor to Provide
100	LB	Medium Grade Terra-Sorb Synthetic Super Absorbent
48	CY	Planting Mix- 33% Clean Sharp Sand, 33% Florida Peat, 33% Well-rotted Wood Chips/Compost
138	CY	Mulch: Shredded Brown Mulch
1	Allow	Irrigation - TBD

Bracing, Guying, Staking & Fertilizing is to be included in the unit price for installed plant material

*All material calculations are based on measurements from AutoCAD drawings and do not include shrinkage, cuts & waste, etc. Contractor is responsible for measuring & verifying quantities/calculations for the project.

811
KNOW WHAT'S BELOW
ALWAYS CALL 811
BEFORE YOU DIG
It's fast. It's free. It's the law.
Call 811 two business days before digging

IMPORTANT NOTE:
THIS SCHEMATIC IS BASED ON AN AERIAL PHOTO ONLY AND IS NOT 100% ACCURATE. CONTRACTOR SHALL FIELD VERIFY ALL EXISTING CONDITIONS, PRIOR TO COMMENCEMENT OF WORK.

0' 25' 50' 100' 150'
SCALE: 1" = 50'-0"
N

WMB
(ARCHITECTURE)
ROI SOLUTIONS.
110 South Kentucky Avenue
Lakeland, Florida 33801
863.687.3573
wmb-roi.com
Corp. Lic. No. AAC001165

CONSULTANTS:

SEAL: CORY J COLLINS, P.E. Fla. P.E. No 78602

DATE:

PROJECT NAME:

GIBSON OAKS
POLK COUNTY, FL

ISSUED DATES:

MARK	DATE	DESCRIPTION

DR. BY: M.M.
QAL:
CHKD. BY: M.C.
QAM: M.C.
DATE: 08-17-17
SCALE: 1" = 50'-0"
PROJ. NO.:
DWG TITLE:
LANDSCAPE SITE PLAN
DWG. No.:
L-1