THE BOARD OF WATER AND SEWER COMMISSIONERS OF THE CITY OF MOBILE, ALABAMA

M&W PROJECT NO. M5712-2650

ESLAVA CREEK FORCE MAIN REPLACEMENT

PHASE 3: BAKER STREET TO WILLIAMS WASTEWATER TREATMENT FACILITY

JULY 2020

NORTH

DRAWING INDEX

SHEET	DESCRIPTION
1	TITLE SHEET
2	PROJECT NOTES
3	PLANS LEGEND
4-12	PLAN/PROFILE SHEETS
12A-12B	PLAN/PROFILE DETAIL SHEETS
12C-12D	MISCELLANEOUS DETAIL SHEETS
12E	RAILROAD BORE SHEET
13-13F	EROSION CONTROL SHEETS
14	TRAFFIC CONTROL SHEET
15-15H	DETAIL SHEETS
16-16I	BORING LOG SHEETS
17	FITTINGS COORDINATE TABLE
18-18E	EXISTING 48" FORCE MAIN PLAN SHEETS 12 - 17, PROJECT 566A, DECEMBER 1971. (FOR INFORMATIONAL PURPOSES ONLY)
19-19G	EXISTING 48" FORCE MAIN PLAN SHEETS 12 - 19, VOLKERT PROJECT 044424.06, APRIL 15, 2012. (FOR INFORMATIONAL PURPOSES ONLY)

END WORK PHASE 3
END PROJECT
STA. 312+98.00
WILLIAMS WASTEWATER TREATMENT FACILITY

BEGIN WORK PHASE 3
BAKER ST-TIE TO
EXISTING 36" FM
STA. 218+91.00

BEGIN PROJECT
STA. 10+00.00
ESLAVA PUMPING STATION

VICINITY MAP
NOT TO SCALE

2020

McCrory Williams
INCORPORATED
Engineers Surveyors
3207 INTERNATIONAL DRIVE
SUITE G
MOBILE, ALABAMA 36606

PREPARED AND RECOMMENDED BY
McCRORY AND WILLIAMS, INC.
CONSULTING ENGINEERS

APPROVED _____ DATE _____

WILLIAM E. WILKERSON, P.E.

ALABAMA LICENSED NO. 11038 PROFESSIONAL ENGINEER WILLIAM E. WILKERSON
SEAL IS INVALID IF NOT SIGNED

GENERAL NOTES

1. THE ENGINEER WILL REVIEW THE EXISTING UTILITIES, STRUCTURES, AND SPECIFIC LOCATION OF PIPING IN THE FIELD WITH THE CONTRACTOR BEFORE CONSTRUCTION BEGINS. THESE DRAWINGS DO NOT PURPORT TO SHOW IN COMPLETE DETAIL ALL EXISTING STRUCTURES, UTILITIES, OR PIPING. THE CONTRACTOR SHALL EXAMINE ALL AVAILABLE RECORDS AND MAKE ALL EXCAVATIONS AND EXPLORATIONS AS REQUIRED TO DETERMINE THE LOCATION OF EXISTING STRUCTURES, UTILITIES, AND PIPES WHENEVER NECESSARY.

2. THE CONTRACTOR SHALL SCHEDULE HIS WORK SO THAT THE WORK PROCEEDS IN AN EFFICIENT AND ORDERLY MANNER WITHOUT DISRUPTION OF SANITARY SEWER SERVICE TO THE OWNER. THE CONTRACTOR SHALL BE AWARE THAT THE WORK TO BE ACCOMPLISHED IS PART OF AN EXISTING AND OPERATING SANITARY SEWER COLLECTION SYSTEM. ALL CONSTRUCTION SHALL BE COORDINATED WITH THE OWNER IN ORDER TO MINIMIZE OPERATIONAL PROBLEMS.

3. CONTRACTOR WILL BE RESPONSIBLE FOR ANY DAMAGE DONE BY HIS EQUIPMENT TO EXISTING UTILITIES, CROSS-DRAIN PIPES, BOX CULVERTS AND HEADWALLS.

4. ALL PROPERTY LINE MARKERS (IRON PINS, CONCRETE MONUMENTS, ETC.) DESTROYED DURING CONSTRUCTION SHALL BE REPLACED IN KIND BY THE CONTRACTOR AT NO ADDITIONAL COST TO THE THE CONTRACTOR AT NO ADDITIONAL COST TO THE OWNER. THE CONTRACTOR SHALL EMPLOY A LAND SURVEYOR REGISTERED IN THE STATE OF ALABAMA TO RESET PROPERTY MARKERS.

5. ALL ROADWAY SHOULDERS DISTURBED DURING CONSTRUCTION SHALL BE GRASSED AND MULCHED IN ACCORDANCE WITH THE SPECIFICATIONS IMMEDIATELY AFTER EXCAVATION IS COMPLETE OR PIPE IS IN PLACE.

6. CONTRACTOR SHALL EXPLORE AHEAD 200 FEET SO ADJUSTMENTS CAN BE MADE IN THE ALIGNMENT OF THE PIPE IN CASE OF CONFLICTS WITH EXISTING STRUCTURES, UTILITIES AND PIPING.

7. THE CONTRACTOR SHALL BE RESPONSIBLE FOR MAINTAINING FLOWS THROUGH EXISTING PIPING, CHANNELS AND STRUCTURES AND DIVERSION OF FLOWS AS NECESSARY DURING CONSTRUCTION UNDER THIS CONTRACT.

8. THE CONTRACTOR SHALL PROVIDE, AT NO ADDITIONAL COST TO THE OWNER, ALL NECESSARY LABOR, EQUIPMENT, MATERIALS AND INCIDENTALS AS REQUIRED TO ACCOMPLISH THE INTENT OF WORK SHOWN ON THE DRAWINGS AND AS SPECIFIED.

9. CONCRETE & ASPHALT DRIVEWAYS CUT DURING CONSTRUCTION SHALL BE REPAIRED IN ACCORDANCE WITH CONTRACT SPECIFICATIONS AND THESE DRAWINGS.

10. THE JOB SITE SHALL BE KEPT CLEAN AT ALL TIMES. LOOSE DIRT SHALL NOT BE ALLOWED TO CLOG DITCHES OR COVER SIDEWALKS. SOFT CLAY OR OTHER UNDESIRABLE MATERIAL REMOVED FROM TRENCHES SHALL BE REMOVED FROM STREETS, SIDEWALKS, OR DITCHES. THE OWNER RESERVES THE RIGHT TO DEMAND THAT THE CONTRACTOR'S FORCES BE DIVERTED TO THIS CLEAN-UP AT ANY TIME THAT CONDITION OF STREETS, DRIVEWAYS, SIDEWALKS, OR PRIVATE PROPERTY WARRANTS SUCH DIVERSION. SUCH DIVERSION OF CONTRACTOR'S FORCES WILL NOT ENTITLE THE CONTRACTOR TO ANY EXTENSION OF TIME OR ADDITIONAL COMPENSATION.

11. THE CONTRACTOR SHALL TAKE ALL NECESSARY STEPS BOTH TO PREVENT SILT AND/OR ERODED MATERIALS EXCAVATED ON THIS PROJECT FROM BEING DEPOSITED ON PRIVATE PROPERTIES ADJACENT TO THE PROJECT AND TO PREVENT EXCAVATED SOIL ON THIS PROJECT FROM WASHING INTO ALL CREEKS, BRANCHES OR STREAMS. THE CONTRACTOR SHALL USE SILT CURTAINS OR OTHER MEANS AND SHALL SUBMIT EROSION AND SEDIMENT CONTROL PLANS FOR ENGINEER APPROVAL. ALL EROSION AND SEDIMENTATION WORK SHALL BE PERFORMED IN ACCORDANCE WITH THE "BEST MANAGEMENT PRACTICES" AS PREPARED BY ADEM AND EPA AND WITH THE CONTRACT SPECIFICATIONS.

12. THE CONTRACTOR SHALL CALL 1-800-292-8525 FOR THE LOCATION OF UTILITIES A MINIMUM OF 48 HOURS PRIOR TO STARTING THE WORK.

13. ALL SEWER CONSTRUCTION WORK ON THIS PROJECT SHALL BE PERFORMED IN ACCORDANCE WITH ALL APPLICABLE INDUSTRY CODES OR STANDARDS. THESE CODES AND STANDARDS INCLUDE BUT ARE NOT LIMITED TO THE FOLLOWING: AMERICAN WATER WORKS ASSOCIATION (AWWA), AMERICAN NATIONAL STANDARD INSTITUTE (ANSI), AMERICAN RAILWAY ENGINEERING ASSOCIATION (AREA), AMERICAN SOCIETY FOR TESTING AND MATERIALS (ASTM), OCCUPATIONAL SAFETY AND HEALTH ADMINISTRATION (OSHA), AMERICAN ASSOCIATION OF STATE HIGHWAY AND TRANSPORTATION OFFICIALS AASHTO), ALABAMA DEPARTMENT OF ENVIRONMENTAL MANAGEMENT (ADEM), DUCTILE IRON PIPE RESEARCH ASSOCIATION (DIPRA), STATE OF ALABAMA HIGHWAY DEPARTMENT (SAHD), AND ENVIRONMENTAL PROTECTION AGENCY (EPA).

14. IN THE CITY OF MOBILE RIGHT-OF-WAY, THE CONTRACTOR SHALL BE IN ADHERENCE TO THE MOBILE RIGHTS OF WAY CONSTRUCTION AND ADMINISTRATION ORDINANCE. THE CONTRACTOR SHALL ALSO PERFORM ALL WORK IN CONFORMANCE TO THE PROVISIONS OF THE FOLLOWING: CITY OF MOBILE STANDARD SPECIFICATIONS, AND THE ALABAMA DEPARTMENT OF TRANSPORTATION UTILITY MANUAL, LATEST EDITION; STATE OF ALABAMA HIGHWAY DEPARTMENT STANDARD SPECIFICATIONS FOR HIGHWAY CONSTRUCTION, 2006 EDITION; AND MANUAL ON UNIFORM TRAFFIC CONTROL DEVICES (MUTCD), PART VI, LATEST EDITION.

15. SEWERS SHALL BE LAID AT LEAST 5 FEET HORIZONTALLY FROM ANY EXISTING OR PROPOSED WATER MAIN. ALL DISTANCES SHALL BE MEASURED FROM EDGE TO EDGE. WHERE POSSIBLE, INSTALL SEWER PIPE SUCH THAT THE TOP ELEVATION OF THE SEWER LINE IS A MINIMUM OF 18 INCHES BELOW THE BOTTOM ELEVATION OF THE WATER LINE. WHERE CROSSINGS ARE NECESSARY, ENCASE THE SEWER PIPE WITH A CONTINUOUS STEEL PIPE OF SUFFICIENT LENGTH, LOCATED SUCH THAT A MINIMUM FIVE-FOOT SEPARATION EXISTS BETWEEN END OF THE CASING PIPE FOR THE SEWER PIPE AND THE UNCASED WATER PIPE.

16. WHERE SEWER LINE IS LAID IN LAWNS, THE CONTRACTOR SHALL BE RESPONSIBLE FOR REMOVING AND PRESERVING EXISTING AND AFFECTED SOD, PLANTS, AND SHRUBS. CONTRACTOR WILL ALSO BE REQUIRED TO PROVIDE PRE CONSTRUCTION PHOTOGRAPHS TO INCLUDE DOCUMENTATION OF THE EXISTING CONDITIONS WITHIN THE RIGHT OF WAY. AFTER LAYING THE SEWER LINE, THE CONTRACTOR SHALL REINSTALL ALL REMOVED SOD, PLANTS, AND SHRUBS TO THEIR ORIGINAL CONDITION OR BETTER. ANY SOD, PLANTS, OR SHRUBS DAMAGED BY CONTRACTOR'S REMOVAL OF SAME SHALL BE REPLACED IN KIND AT THE CONTRACTOR'S EXPENSE TO THE SATISFACTION OF THE ENGINEER, AFFECTED LANDOWNER(S). WHERE SOD, PLANTS, & SHRUBS ARE WITHIN THE ROW THESE ITEMS WILL ALSO REQUIRE APPROVAL BY THE CITY MOBILE ROW DEPARTMENT. CONTRACTOR TO CONTACT MARK NELSON (251)-348-9993 FOR APPROVAL.

17. AGGREGATE SURFACING SHALL BE USED FOR MAINTAINING UNPAVED TURNOUTS DURING CONSTRUCTION. THIS MATERIAL SHALL BE VISUALLY INSPECTED BY THE ENGINEER. CONTRACTOR TO MAINTAIN THE CONDITION OF THE AGGREGATE SURFACING AND MINIMIZE TRACKING.

18. ALL COMPACTION REPORTS ARE TO BE SUBMITTED VIA E-MAIL TO MARK NELSON (MARK.NELSON@CITYOFMOBILE.ORG)

19. TURNOUTS SHALL BE MAINTAINED FOR LOCAL TRAFFIC AT ALL TIMES. AT LEAST ONE ACCESS TO BUSINESS & RESIDENCES SHALL BE MAINTAINED DURING CONSTRUCTION.

20. EXISTING CONCRETE GUTTER SHOULD BE CLEANED AND MATERIAL REMOVED OR PLACED NEATLY ON THE SHOULDERS PRIOR TO PAVING. JOINTS IN THE CURB & GUTTER SHOULD BE TREATED W/ A HERBICIDE. INLETS SHOULD BE CLEANED OF DEBRIS. ALL OF THIS WORK SHALL BE PAID FOR AS A SUBSIDIARY OBLIGATION OF PAY ITEM GC-11.

21. ALL VEHICLES, EQUIPMENT, & PERSONNEL, & THEIR ACTIVITIES ARE RESTRICTED AT ALL TIMES TO ONE SIDE OF THE PAVEMENT UNLESS AUTHORIZED BY THE ENGINEER.

22. THE CONTRACTOR WILL INSURE THAT POSITIVE AND ADEQUATE DRAINAGE IS MAINTAINED AT ALL TIMES WITHIN THE PROJECT LIMITS. THIS MAY INCLUDE, BUT NOT BE LIMITED TO, REPLACEMENT OR RECONSTRUCTION OF EXISTING DRAINAGE STRUCTURES THAT HAVE BEEN DAMAGED OR REMOVED OR REGRADING AS REQUIRED BY THE ENGINEER, EXCEPT FOR THOSE DRAINAGE ITEMS SHOWN AT SPECIFIC LOCATIONS IN AND HAVING SPECIFIC PAY ITEMS IN THE DETAILED ESTIMATE. NO SEPARATE PAYMENT WILL BE MADE AT ANY COSTS INCURRED TO COMPLY WITH THIS REQUIREMENT.

SITE CONSTRUCTION NOTES

1. ALL CONCRETE SHALL BE CLASS A, 3,000 PSI AT 28 DAYS COMPRESSIVE STRENGTH WITH A MAXIMUM SLUMP OF 4" UNLESS NOTED OTHERWISE. CITY OF MOBILE REQUIRES A BROOM FINISH ON ALL SIDEWALKS.

2. ALL MATERIALS SHALL BE NEW UNLESS USED OR SALVAGED MATERIALS ARE AUTHORIZED BY THE ENGINEER.

3. ALL DIMENSIONS ARE FACE OF CURB AND FACE OF BUILDING OR AS NOTED.

4. NECESSARY BARRICADES, SUFFICIENT LIGHTS, SIGNS AND OTHER TRAFFIC CONTROL METHODS AS MAY BE NECESSARY PER MANUAL PROTECTION AND ON UNIFORM TRAFFIC CONTROL DEVICES, PART VI, SHALL BE PROVIDED AND MAINTAINED THROUGHOUT CONSTRUCTION.

5. HIGH INTENSITY LIGHTING FACILITIES SHALL BE SO ARRANGED THAT THE SOURCE OF ANY LIGHT IS CONCEALED FROM PUBLIC VIEW AND FROM ADJACENT RESIDENTIAL PROPERTY AND DOES NOT INTERFERE WITH TRAFFIC.

6. THE CONTRACTOR SHALL MAINTAIN ACCESS FOR EMERGENCY VEHICLES AROUND AND TO ALL BUILDINGS NEAR CONSTRUCTION; I.E. IN TIMES OF RAIN OR MUD, ROADS SHALL BE ABLE TO CARRY A FIRE TRUCK BY BEING PAVED OR HAVING A CRUSHED STONE BASE, ETC. WITH A MINIMUM WIDTH OF 20 FEET. THIS ACCESS TO BUILDINGS THAT HAVE SPRINKLER OR STANDPIPE SYSTEMS SHALL BE TO WITHIN 40 FEET OF THE FIRE DEPARTMENT CONNECTOR. (NFPA 1141 3-1).

7. ALL SIDEWALK & DRIVEWAY CONSTRUCTION SHOWN IN THESE PLANS SHALL BE IN ACCORDANCE WITH THE CITY OF MOBILE STANDARDS. CONTRACTOR SHALL MATCH DRIVEWAYS IN-KIND, WHEN STANDARD DRIVEWAYS IS NOT APPLICABLE. CONTACT CITY OF MOBILE ROW INSPECTOR FOR THIS PROJECT AHEAD OF TIME TO COORDINATE ANY NON STANDARD ITEMS OR IF ADDITIONAL INFORMATION IS REQUIRED.

8. AT ALL LOCATIONS WHERE NEW SIDEWALK, EDGE OF PAVEMENT OR CURB IS REQUIRED TO BE PLACED ADJACENT TO EXISTING ASPHALT OR CONCRETE PAVEMENT, ANY NECESSARY EXISTING PAVEMENT REMOVAL IS TO BE ACCOMPLISHED ALONG NEAT, FULL DEPTH SAW CUT LINES. THE COST OF THIS WORK SHALL BE A SUBSIDIARY OBLIGATION OF ITEM PA-6.

9. CONTRACTOR TO CONTACT CITY OF MOBILE RIGHT OF WAY INSPECTOR, MARK NELSON (251)-348-9993, FOR PRE-POUR INSPECTION BEFORE SIDEWALK AND/OR DRIVEWAY IS POURED.

10. PRIOR TO CONSTRUCTION, IT SHALL BE THE CONTRACTOR'S RESPONSIBILITY TO PREPARE, FOR APPROVAL BY THE PROJECT ENGINEER, A DETAILED AND COMPREHENSIVE EROSION AND SILTATION CONTROL PLAN THAT COVER ALL PHASES OF CONSTRUCTION. CONTRACTOR SHALL SUBMIT TO THE CITY OF MOBILE ROW DEPT. PRIOR TO ISSUANCE OF PERMIT.

11. ALL PERMITS REQUIRED FOR COMPLETION OF CONSTRUCTION SHALL BE FURNISHED AND OBTAINED BY THE CONTRACTOR. PRIOR TO BEGINNING WORK.

12. EXISTING STREET AND ROAD NAMES SIGNS IN THE PROJECT AREA SHALL BE KEPT VISIBLE AT ALL TIMES FOR THE FACILITATION OF ACCESS BY EMERGENCY VEHICLE TRAFFIC.

13. THE CONTRACTOR WILL BE REQUIRED TO COORDINATE CONSTRUCTION EFFORTS WITH OTHER CONTRACTORS THAT HAVE BEEN AWARDED MAWSS CONTRACTS WITH IN THE LIMITS OF THIS PROJECT. IN ADDITION, THE CONTRACTOR WILL BE RESPONSIBLE FOR COORDINATION OF ALL CONSTRUCTION SCHEDULES. ALL COSTS INCURRED BY THE CONTRACTOR FOR THE COORDINATION EFFORTS WILL BE INCIDENTAL TO EXISTING PAY ITEMS.

14. CONTRACTOR SHALL MAKE A REQUEST FOR PERMANENT PAVING TO CITY OF MOBILE ROW INSPECTOR. MARK NELSON (MARK.NELSON@CITYOFMOBILE.ORG)

15. CONTRACTOR SHALL NOTIFY THE CITY 2 DAYS PRIOR TO BEGINNING CONSTRUCTION.

16. CONTRACTOR SHALL CONTACT CITY OF MOBILE TRAFFIC DEPARTMENT 3 DAYS PRIOR TO BEGINNING CONSTRUCTION.

17. THE CONTRACTOR SHALL APPLY TEMPORARY SEEDING AND MULCHING TO ALL DISTURBED AREAS AT THE END OF EACH DAY AND/OR NO LATER THAN THE WORK WEEK. PAYMENT SHALL BE A SUBSIDIARY ITEM OF PROPERTY RESTORATION.

CITY OF MOBILE RIGHT OF WAY NOTES

1. ALL WORK WITHIN THE CITY OF MOBILE RIGHT OF WAY MUST COMPLY WITH THE "MOBILE RIGHTS OF WAY CONSTRUCTION AND ADMINISTRATION ORDINANCE".

2. THE CITY ENGINEERING INSPECTOR FOR THIS PROJECT IS;
   A. W: STAN FERRELL (251-463-8474, stan.ferrell@cityofmobile.org)
   D. N: MARK NELSON (251-348-9993, MARK.NELSON@CITYOFMOBILE.ORG.)

3. ALL WORK WITHIN THE CITY OF MOBILE RIGHT OF WAY MUST COMPLY WITH THE "MOBILE RIGHTS OF WAY CONSTRUCTION AND ADMINISTRATION ORDINANCE". A COPY OF THE ORDINANCE MAY BE FOUND AT http://cityofmobile.org, Online Services, Forms and Applications, Engineering, Rights of Way Construction and Administration Ordinance.

4. ALL WORK SHALL BE IN COMPLIANCE WITH THE STORM WATER DRAINAGE ORDINANCE AND FLOOD PLAIN MANAGEMENT PLAN OF THE CITY OF MOBILE, ALABAMA, INCLUDING BUT NOT LIMITED TO;
   A. DO NOT ALTER THE NATURAL DRAINAGE FLOW PATTERN IN THE AREA OF WORK.
   B. DO NOT DIVERT STORM WATER ONTO ADJACENT PROPERTY OR INCREASE THE AMOUNT OF NATURAL DRAINAGE FLOW ONTO AN ADJACENT PROPERTY OWNER OR PREVENT THE NATURAL FLOW OF WATER IN THE AREA OF WORK.
   C. DO NOT FILL WETLANDS WITHOUT A PERMIT FROM THE U.S. ARMY CORPS OF ENGINEERS.

5. ANY WORK IN THE FLOOD PLAIN SHALL BE IN COMPLIANCE WITH ALL THE REQUIREMENTS OF DIVISION 2, FLOOD PLAIN REQUIREMENTS OF THE CITY OF MOBILE, ALABAMA STORM WATER DRAINAGE ORDINANCE.

6. ANY DAMAGE TO ANY CITY OF MOBILE FACILITY OR DRAINAGE STRUCTURE, DITCH, ETC. SHALL BE THE RESPONSIBILITY OF THE PERMITTEE TO REPAIR TO THE CITY OF MOBILE STANDARDS AT NO COST TO THE CITY OF MOBILE. IT IS THE RESPONSIBILITY OF THE PERMITTEE TO NOTIFY THE CITY OF MOBILE IMMEDIATELY IF ANY DAMAGE OCCURS. MARK NELSON AT (251) 348-9993 SHOULD BE NOTIFIED IN THE CITY OF MOBILE RIGHT OF WAY DEPARTMENT.

7. ANY EXCESS SOIL FROM A HOLE OR ANY EXCAVATION FOR PITS, ETC., SHALL BE REMOVED FROM THE RIGHT OF WAY (NOT LEFT IN THE RIGHT OF WAY).

8. THE INSTALLATION OF AN IRRIGATION SYSTEM WITHIN THE CITY OF MOBILE RIGHT OF WAY WILL REQUIRE THE APPROVAL OF AN IRRIGATION PLAN AND CITY OF MOBILE RIGHT OF WAY PERMIT. PLEASE PROVIDE A PLAN OF THE IRRIGATION SYSTEM FOR REVIEW.

9. ALL DISTURBED AREAS OF THE RIGHT OF WAY TO BE SOLID SODDED AND EXISTING BARE AREAS MAY REQUIRE SOD. EXISTING VEGETATION MAY REQUIRE REMOVAL AND PLACEMENT OF SOD DEPENDING ON ITS CONDITION. THE SOD IS REQUIRED TO BE INSTALLED FLUSH WITH THE TOP OF THE SIDEWALK.

10. ALL STORM DRAINPIPE JOINTS ARE TO BE WRAPPED WITH FILTER CLOTH (A NOTE AND DETAIL IS REQUIRED IN THE PLAN).

11. ALL STORM DRAIN PIPE INSTALLED IN THE CITY RIGHT OF WAY ARE REQUIRED TO NOT HAVE ANY LIFTING HOLES (FILLING THE LIFTING HOLES IS NOT ALLOWED). A NOTE STATING THIS IS REQUIRED IN THE PLAN. THE CONTRACTOR NEEDS TO NOTIFY THE PIPE MANUFACTURER AHEAD OF TIME THAT THE PROJECT IS WITHIN THE CITY OF MOBILE RIGHT OF WAY.

12. THE CITY OF MOBILE REQUIRES A MINIMUM OF THIRTY-SIX INCH SEPARATION BETWEEN ANY PIPE/STRUCTURE AND A CITY OF MOBILE STORM DRAINPIPE. PROVIDE A CROSS-SECTION RELATIVE TO ALL PROPOSED PIPE INSTALLATIONS THAT ARE ADJACENT TO A STORM DRAINPIPE(S) WITHIN THE CITY OF MOBILE RIGHT OF WAY. THE CROSS-SECTION WILL NOT BE REQUIRED IF THE PIPE IS INSTALLED BY A UTILITY COMPANY AND NOT THE PROJECT'S CONTRACTOR, BECAUSE THE UTILITY COMPANY WILL PROVIDE THE CROSS SECTION WHEN THEY ACQUIRE THEIR PERMIT.

13. ALL SIDEWALK CONSTRUCTION MUST COMPLY WITH THE CITY OF MOBILE CITY ENGINEERING STANDARD DRAWING 12, "CONCRETE SIDEWALK DETAILS". THE STANDARD DRAWING DETAIL AND A NOT SHOULD BE INCLUDED IN THE PLAN.

14. AN ADA COMPLIANT TRUNCATED DOME PANEL WILL BE REQUIRED ON THE SIDEWALK AT EACH SIDE OF THE DRIVEWAY. THE TRUNCATED DOME PANEL MUST BE A POLYMER COMPOSITE TRUNCATED DOME PANEL THAT MEETS THE REQUIREMENTS STATED IN THE CITY ENGINEERING TYPICAL HANDICAP CURB RAMP STANDARD DRAWING SEVEN.

15. A VIDEO SHALL BE SUBMITTED TO THE CITY SHOWING THE UNDERGROUND DETENTION SYSTEM PIPES, THE PIPE FROM THE OUTLET STRUCTURES TO THE CITY DRAINAGE SYSTEM, AND THE PIPE CARRYING PUBLIC WATER. THE PIPE MUST BE VIDEOED AFTER THE PROJECT'S COMPLETION, BUT PRIOR TO THE REQUEST FOR A CERTIFICATE OF OCCUPANCY. SUBMIT THE VIDEO TO THE CITY OF MOBILE ENGINEERING DEPARTMENT WITH THE ENGINEER'S AS-BUILT CERTIFICATION PACKAGE. THE VIDEO NEEDS TO BE REVIEWED BY THE PROJECT ENGINEER BEFORE BEING SUBMITTED TO THE CITY. EACH JOINT NEEDS TO BE PANNED LEFT AND RIGHT AS WELL AS ANY DEFICIENCIES BEING WELL DOCUMENTED VIA VIDEOGRAPHY.

16. PROVIDE THE LENGTH OF ALL PROPOSED STORM DRAINPIPE, WATER LINE, AND/OR SANITARY SEWER LINE WITHIN THE CITY OF MOBILE RIGHT OF WAY. THIS IS REQUIRED FOR THE CALCULATION OF THE PERMIT FEES (IF THE PIPE IS TO BE INSTALLED BY THE PROJECT CONTRACTOR AND NOT THE UTILITY COMPANY).

17. A BOND WILL BE REQUIRED FOR ALL WORK THAT IS PERFORMED WITHIN THE CITY OF MOBILE RIGHT OF WAY. THE BOND AMOUNT SHOULD BE BASED UPON THE TOTAL COST OF THE PROJECT (PORTION WITHIN THE CITY OF MOBILE RIGHT OF WAY, AS DETERMINED BY THE APPLICANT).

REVISION

McCrory Williams
INCORPORATED
Engineers Surveyors

3207 INTERNATIONAL DR., SUITE G
MOBILE, ALABAMA
36606
PHONE: (251) 476-4720
FAX: (251) 476-4721
EMAIL: mail@mcwinc.com

M5712-2650
####

ESLAVA CREEK FORCE MAIN REPLACEMENT

PROJECT NOTES

BOARD OF WATER AND SEWER COMMISSIONERS OF THE CITY OF MOBILE

SCALE: NOT TO SCALE	DATE: 2019	DRAWN BY: AKE	APPROVED BY: WEW	SHEET 2 OF 19

GeM57\M2650_Mbn_Eslava_Creek_FM_Parallel_Lines\Docs\Civil\Mbn\General Notes_02.dgn

PLANS LEGEND SHEET

ROADWAY

55+00

CENTER LINE .....
STATE BOUNDARY LINE .....
COUNTY BOUNDARY LINE .....
CITY OR TOWN LIMITS .....
SECTION LINES ..... SEC 22 / SEC 23
QUARTER-SECTION LINES .....
RANGE-TOWNSHIP LINES ..... R-17-E / R-18-E
PROPERTY LINES ..... PL
PRESENT ROW .....
ACQUIRED ROW .....
DENIED ACCESS .....
REQUIRED FENCE .....
CONSTRUCTION LIMITS ..... CONST LIM
CLEARING LIMITS .....
RAILROAD .....
EXISTING WOOD FENCE .....
EXISTING BARBED WIRE FENCE .....
EXISTING CHAIN LINK FENCE .....
EXISTING ELECTRIC FENCE .....
EXISTING HOG WIRE FENCE .....
TREES .....
WOODS LINE .....
MARSH .....
EXISTING DITCH .....
REQUIRED DITCH.....
GRAVEL ROAD .....
EXISTING GUARDRAIL .....
REQUIRED GUARDRAIL .....
SATELLITE DISH .....
TRAFFIC LIGHT .....
BENCH MARK .....
SURVEY POINT .....
ENVIRONMENTAL CLEARED LIMITS ..... ENV

EXISTING PIPE .....

REQUIRED PIPE
(WITH PIPE END TREATMENT).....

REQUIRED PIPE END TREATMENT.....

EXISTING BOX CULVERT .....

REQUIRED BOX CULVERT .....

EXTENDED CULVERT .....

DROP INLET OR JUNCTION BOX
(SEE PLANS DESCRIPTION).....

BRIDGE .....

PIPE CULVERT (ELEVATION VIEW) .... FL=410.25

BOX CULVERT (ELEVATION VIEW) ..... FL=420.55

DRAINAGE STRUCTURE INDEX NUMBERS

DRAINAGE STRUCTURE WRITE-UPS ARE LOCATED ON THE DRAINAGE CROSS-SECTION SHEETS. STRUCTURES WITH WRITE-UPS ARE INDEXED AT EACH END, WITH NUMBERS ASSIGNED BY DIRECTION OF FLOW. THE NUMBER IN THE UPPER HALF OF THE CIRCLE (EXAMPLE 8 OR 9) IS THE DRAINAGE STRUCTURE INDEX NUMBER. THE NUMBER IN THE LOWER HALF (EXAMPLE 88) IS THE SHEET REFERENCE NUMBER.

8/88 — REQD 18" RCP — 9/88

ROADWAY PIPE EXAMPLE

ALL INFORMATION CONCERNING THE DISPOSITION OF SIDE DRAIN PIPE IS SHOWN ON THE SUMMARY OF QUANTITIES BOX SHEET. THE TOP LETTERS (SD) ARE FOR SIDE DRAIN AND THE BOTTOM NUMBER IS THE DRAINAGE STRUCTURE INDEX NUMBER.

SD/4 — REQD 18"

SIDE DRAIN PIPE EXAMPLE

DIRECTION OF FLOW .....

UTILITIES

	EXISTING	PROPOSED
POWER POLE		
LIGHT POLE		
TELEPHONE POLE		
ANCHOR		
STUB (POWER)		
STUB (TELEPHONE)		
ELECTRIC DUCT	EL 4MTD	EL 4MTD
BURIED ELECTRIC CABLE	BE	BE
OVERHEAD ELECTRIC CABLE	OE	OE
ELECTRIC MANHOLE	E	E
TOWER		
TELEPHONE PEDESTAL		T
TELEPHONE DUCT	TP 4MTD	TP 4MTD
BURIED TELEPHONE CABLE	BTC	BTC
OVERHEAD TELEPHONE CABLE	OTC	OTC
TELEPHONE MANHOLE	TMH	TMH
SANITARY SEWER	S	SS
WATER LINE	W	W
WATER MAIN	WM	WM
WATER VALVE	W	W
FIRE HYDRANT		
WATER METER		
GAS LINE	G	G
GAS MAIN	GM	GM
GAS VALVE	G	G
GAS REGULATOR		
BURIED CABLE TELEVISION.....	BTV	BTV
OVERHEAD CABLE TELEVISION.....	OTV	OTV

EXISTING PAVEMENT (RETAIN).....

EXISTING PAVEMENT (REMOVE).....

EXISTING PAVEMENT (RETAIN AND OVERLAY)..

CONCRETE (EXISTING OR REQUIRED).....

EXISTING CONCRETE (REMOVE).....

RIP RAP (EXISTING OR REQUIRED).....

REVISION

McCrory Williams
INCORPORATED
Engineers Surveyors

3207 INTERNATIONAL DR., SUITE G
MOBILE, ALABAMA
36606
PHONE: (251) 476-4720
FAX: (251) 476-4721
EMAIL: mail@mcwinc.com

M5712-2650
####

ESLAVA CREEK FORCE MAIN REPLACEMENT

PLANS LEGEND SHEET

BOARD OF WATER AND SEWER COMMISSIONERS OF THE CITY OF MOBILE

SCALE: NOT TO SCALE	DATE: 2019	DRAWN BY: AKE	APPROVED BY: WEW	SHEET 3 OF 19

GdM5712(2650) 4th Eslava Creek FM Parallel Lines&ADMCIVIL&PLANS&Phase III-A&Plans Legend 03.dgn

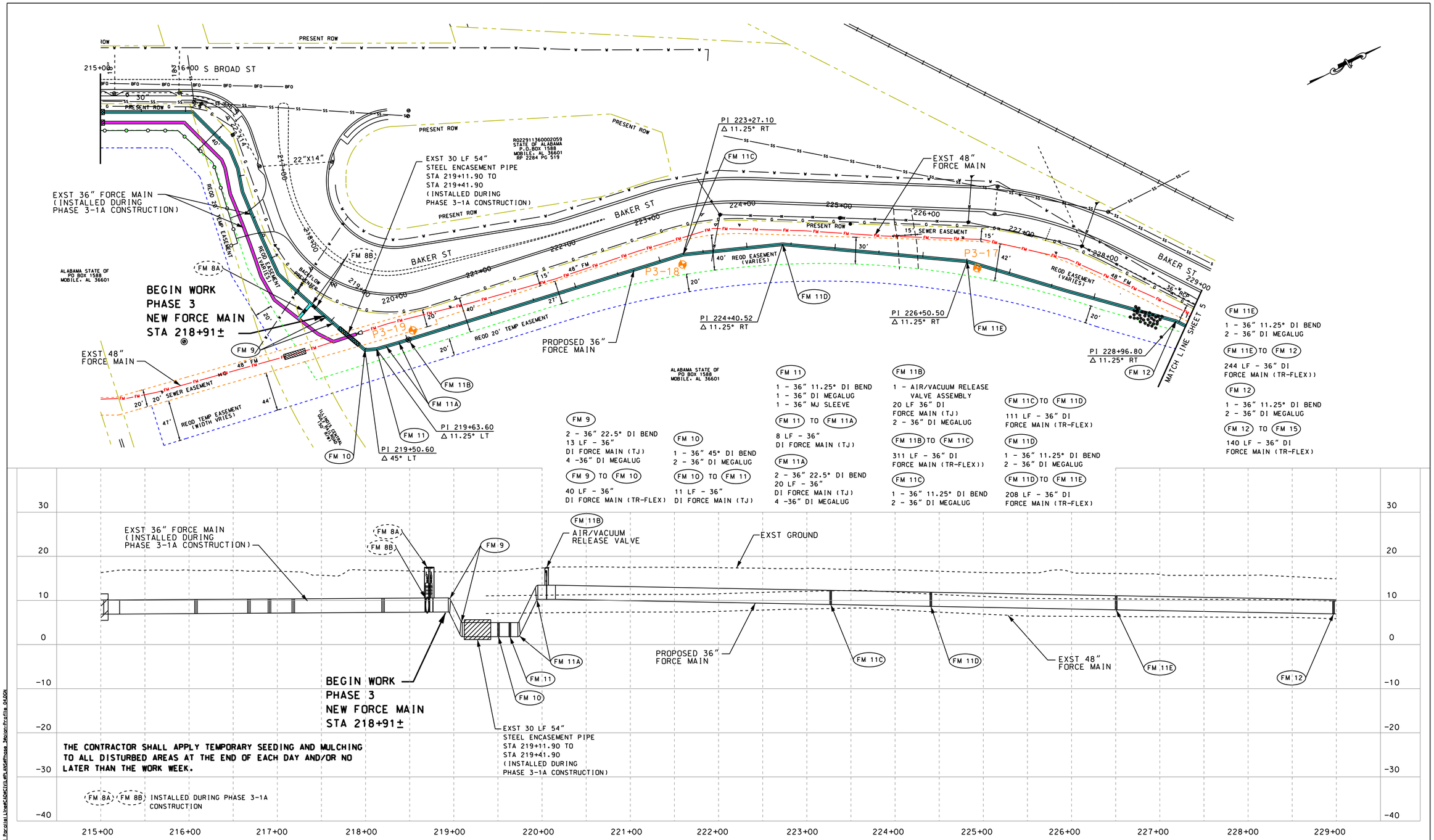

McCrory Williams
INCORPORATED
Engineers Surveyors

3207 INTERNATIONAL DR., SUITE G
MOBILE, ALABAMA
36606
PHONE: (251) 476-4720
FAX: (251) 476-4721
EMAIL: mail@mcwinc.com

M5712-2650
####

REVISION

ESLAVA CREEK FORCE MAIN REPLACEMENT

PLAN/PROFILE STA 215+00 TO STA 229+00

BOARD OF WATER AND SEWER COMMISSIONERS OF THE CITY OF MOBILE

SCALE: 1" = 50' HORZ 1" = 10' VERT	DATE: 2019	DRAWN BY: AKE	APPROVED BY: WEW	SHEET 4 OF 19

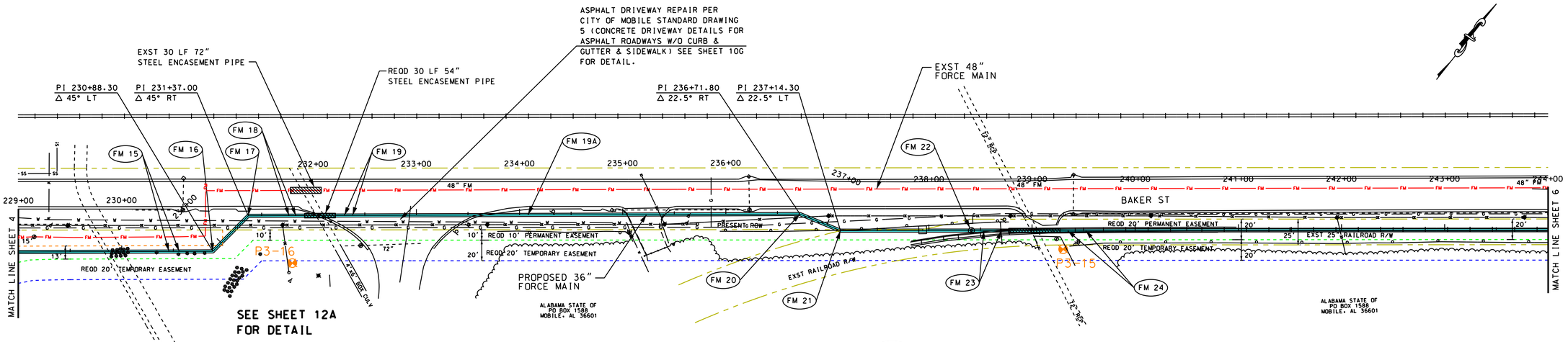

FM 12 TO FM 15
140 LF - 36" DI
FORCE MAIN (TR-FLEX)

FM 15
2 - 36" 11.25° DI BEND
8 LF - 36"
DI FORCE MAIN (TJ)
4 - 36" DI MEGALUG

FM 15 TO FM 16
39 LF - 36"
DI FORCE MAIN (TJ)

FM 16
1 - 36" 45° DI BEND
2 - 36" MEGALUG

FM 16 TO FM 17
47 LF - 36"
DI FORCE MAIN (TJ)

FM 17
1 - 36" 45° DI BEND
2 - 36" MEGALUG

FM 17 TO FM 18
29 LF - 36"
DI FORCE MAIN (TJ)

FM 18
2 - 36" 22.5° DI BEND
6 LF - 36"
DI FORCE MAIN (TJ)
4 - 36" DI MEGALUG

FM 18 TO FM 19
60 LF - 36"
DI FORCE MAIN (TR-FLEX)

FM 19
2 - 36" 22.5° DI BEND
8 LF - 36"
DI FORCE MAIN (TJ)
4 - 36" DI MEGALUG

FM 19 TO FM 19A
160 LF - 36" DI
FORCE MAIN (TR-FLEX)

FM 19A
1 - 36" PVC MEGALUG
1 - 36" DI MEGALUG
1 - 36' MJ SLEEVE

FM 19A TO FM 20
260 LF - 36" DR 21
PVC FORCE MAIN

FM 20
1 - 36" 22.5° DI BEND
1 - 36" PVC MEGALUG
1 - 36" DI MEGALUG

FM 20 TO FM 21
40 LF - 36"
DI FORCE MAIN (TJ)

FM 21
1 - 36" 22.5° DI BEND
1 - 36" DI MEGALUG
1 - PVC MEGALUG

FM 21 TO FM 22
115 LF - 36" DR 21
PVC FORCE MAIN

FM 22
1 - AIR/VACUUM RELEASE VALVE ASSEMBLY
20 LF DI PIPE (TJ)
1 - 36" PVC MEGALUG
1 - 36" DI MEGALUG

FM 23
2 - 36" 22.5° DI BEND
20 LF - 36"
DI FORCE MAIN (TJ)
3 - 36" DI MEGALUG

FM 23 TO FM 24
60 L.F. - 36"
DI FORCE MAIN (TR-FLEX)

FM 24
2 - 36" 22.5° DI BEND
20 LF - 36"
DI FORCE MAIN (TJ)
3 - 36" DI MEGALUG
1 - 36" PVC MEGALUG

FM 24 TO FM 25
460 LF - 36" DR 21
PVC FORCE MAIN

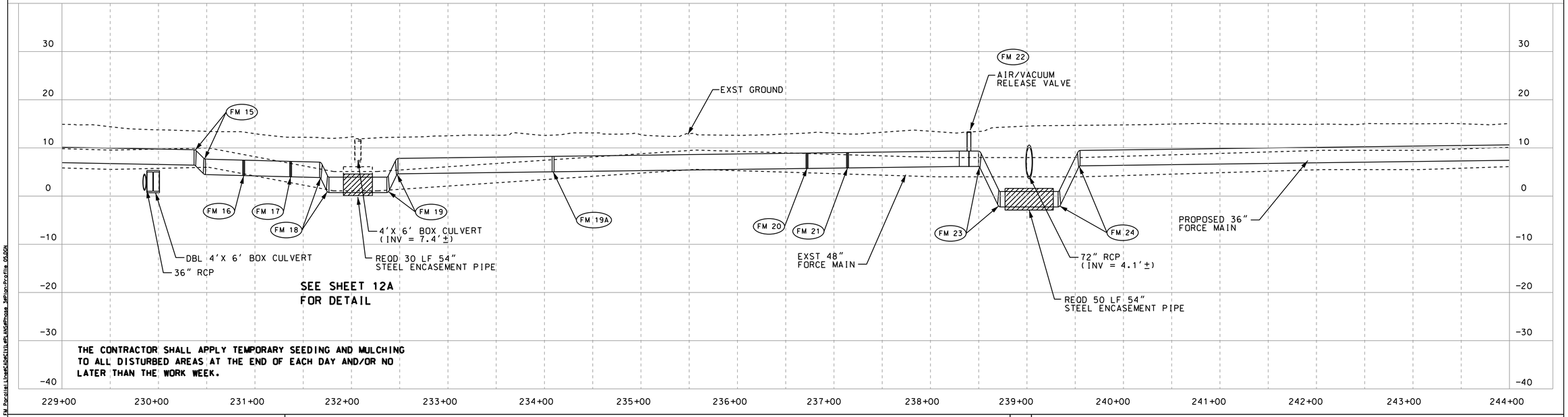

THE CONTRACTOR SHALL APPLY TEMPORARY SEEDING AND MULCHING TO ALL DISTURBED AREAS AT THE END OF EACH DAY AND/OR NO LATER THAN THE WORK WEEK.

REVISION

McCrory Williams
INCORPORATED
Engineers Surveyors

3207 INTERNATIONAL DR., SUITE G
MOBILE, ALABAMA
36606
PHONE: (251) 476-4720
FAX: (251) 476-4721
EMAIL: mail@mcwinc.com

M5712-2650
####

ESLAVA CREEK FORCE MAIN REPLACEMENT

PLAN/PROFILE STA 229+00 TO STA 244+00

BOARD OF WATER AND SEWER COMMISSIONERS OF THE CITY OF MOBILE

SCALE: 1" = 50' HORZ 1" = 10' VERT	DATE: 2019	DRAWN BY: AKE	APPROVED BY: WEW	SHEET 5 OF 19

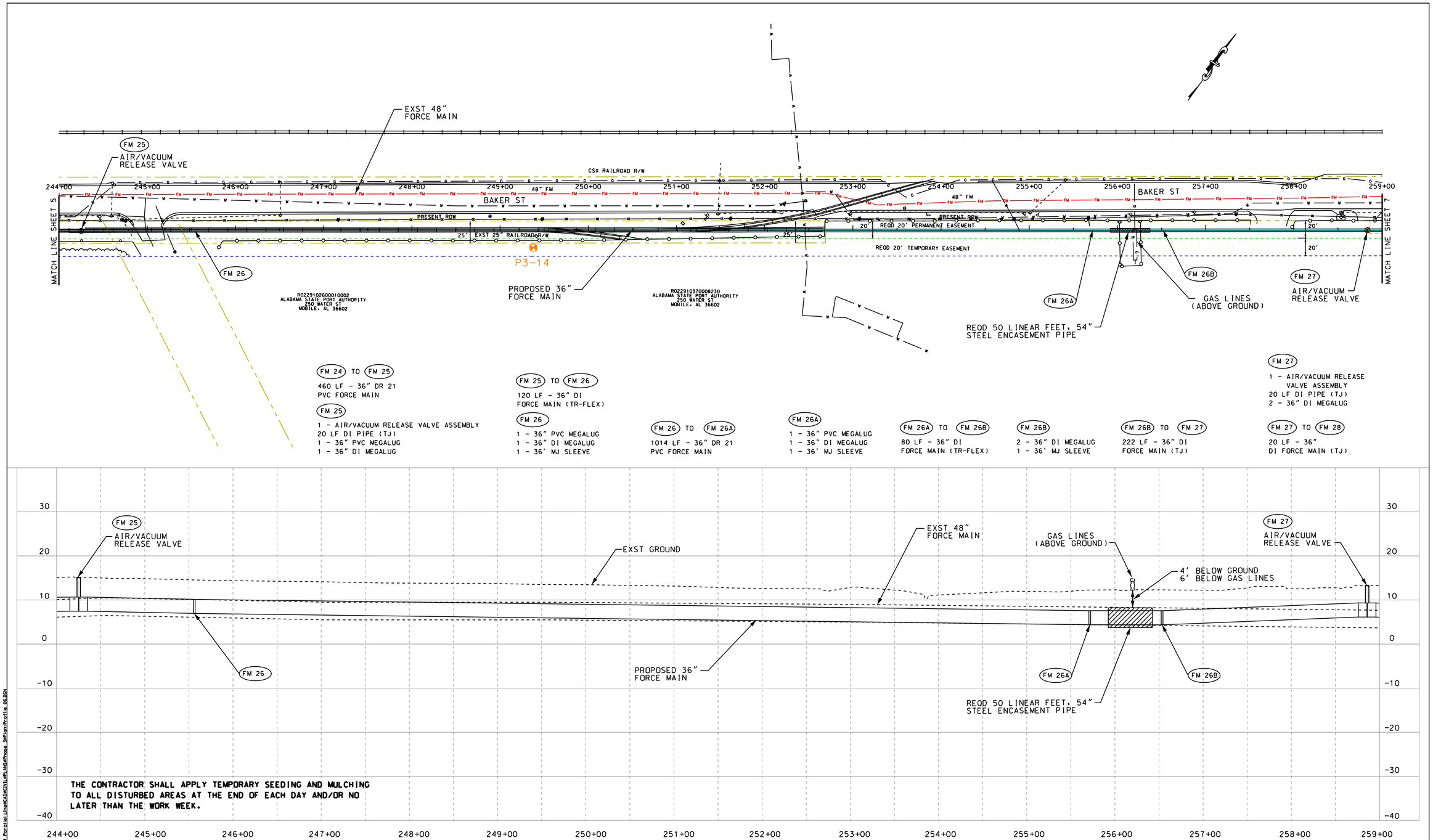

REVISION

McCrory Williams
INCORPORATED
Engineers Surveyors

3207 INTERNATIONAL DR., SUITE G
MOBILE, ALABAMA
36606
PHONE: (251) 476-4720
FAX: (251) 476-4721
EMAIL: mail@mcwinc.com

M5712-2650
####

ESLAVA CREEK FORCE MAIN REPLACEMENT

PLAN/PROFILE STA 244+00 TO STA 259+00

BOARD OF WATER AND SEWER COMMISSIONERS OF THE CITY OF MOBILE

SCALE: 1" = 50' HORZ 1" = 10' VERT	DATE: 2019	DRAWN BY: AKE	APPROVED BY: WEW	SHEET 6 OF 19

FRAC-OUT CONTINGENCY PLAN NOTES

1. DIRECTIONAL DRILLING ACTIVITIES UTILIZE A BENTONITE CLAY AND WATER SLURRY FOR LUBRICATION OF THE DRILL PATH, AND THE SIGNIFICANT HYDRAULIC PRESSURES THAT ARE REQUIRED PRODUCE THE POTENTIAL FOR THE SLURRY TO FRAC-OUT TO THE GROUND SURFACE OR AN ENVIRONMENTALLY SENSITIVE WATERWAY. THEREFORE, IN ANTICIPATION OF DIRECTIONAL DRILLING ACTIVITIES FOR THIS PROJECT, THE FOLLOWING PLAN SHALL BE IMPLEMENTED BY THE CONTRACTOR.

2. ALL PERSONEL ON SITE DURING DIRECTIONAL DRILLING OPERATIONS SHALL BE TRAINED TO DETECT AND RESPOND TO FRAC-OUT CONDITION AND ALL NECESSARY DRILLING EQUIPMENT SHALL BE INSPECTED DAILY FOR LEAKS OR DEFECTS THAT COULD RESULT IN SPILLAGE OF DRILLING MUD. THIS IS THE SITE FOREMANS RESONSIBILITY PRIOR TO THE COMMENCEMENT OF ANY DRILLING OPERATIONS. CONTAINMENT AND CLEANUP PROVISIONS (SAND BAGS, STRAW BALES, SPILL BOOMS, PORTABLE PUMPS, VAC-TRUCKS, ETC.) SHALL BE ON SITE OR NEARBY, READY FOR DEPLOYMENT WITHIN 15 MINUTES. BASED ON PAST DRILLING EXPERIENCE IN SIMILAR CONDITIONS SELECT DRILLING PRESSURES AND DEPTHS THAT MINIMIZE THE POTENTIAL FOR FRAC-OUT.

3. DURING DRILLING OPERATIONS PERSONEL SHALL BE ACTIVELY LOOKING FOR ANY SURFACING OF DRILLING MUD, AND THE DRILL RIG OPERATION SHALL CONTINUOUSLY MONITOR THE DRILLING MUD PRESSURE, LOOKING FOR SUDDEN DROPS THAT COULD INDICATE A FRAC-OUT. ALL DRILLING WORK SHALL CEASE IMMEDIATELY UPON DISCOVERY OF A FRAC-OUT CONDITION AND SYSTEM PRESSURE SHALL BE RELIEVED TO PREVENT CONTINUED SPILLAGE.

4. UPON DISCOVERY OF A FRAC-OUT, ISOLATE THE AFFECTED AREA WITH APPROPRIATE MEASURES. DEPENDING ON WHETHER THE FRAC-OUT OCCURED ON LAND OR IN A WATERWAY. INSTALL SILT FENCE, STRAW BALE, FIBER LOGS OR EQUIVALENT MEASURES AROUND A SPILL ON LAND TO COMPLETELY CONTAIN THE SPILL AND PREVENT ITS TRANSPORT TO WATERWAYS. FOR A FRAC-OUT IN WATER, ISOLATE THE AFFECTED AREA AS RAPIDLY AS POSSIBLE WITH SAND BAGS, SPILL BOOMS, CURTAINS, OR THEIR EQUIVALENT. UTILIZE AMONIC POLYMERS WITHIN A CONTAINED SPILL IN WATERWAYS TO ASSIST IN FLOCCULATION AND REMOVAL. SITE FOREMAN IS TO IMMEDIATELY NOTIFY PROJECT INSPECTOR AND/OR ENGINEER WHO WILL CONTACT SYSTEM OPERATIONS TO ISSUE AN ENVIRONMENTAL ALERT.

5. FOR MINOR SPILLS THAT HAVE BEN SUCCESFULLY CONTAINED, THE SITE FOREMAN SHALL BE RESPONSIBLE TO DETERMINE WHETHER THE LEAK CAN BE STOPPED SUCH THAT DRILLING OPERATIONS CAN BE RESTARTED OR WHETHER THE BORE PATH OR INSTALLATION MUST BE ABANDONED FOR AN ALTERNATE.

6. COMPLETELY REMOVE THE SPILL MATERIAL, EITHER MANUALLY OR WITH A VAC-TRUCK. AFTER DRILLING OPERATIONS HAVE BEEN COMPLETED OR ABANDONED, REMOVE ANY INSTALLED CONTAINMENT MEASURES AND RETURN THE SITE TO ITS PRECONSTRUCTION CONTOURS AND CONDITION. DISPOSE OF ANY SPILLED MATERIAL AT AN APPROVED FACILITY IN ACCORDANCE WITH ALL APPLICABLE LAWS AND REGULATIONS.

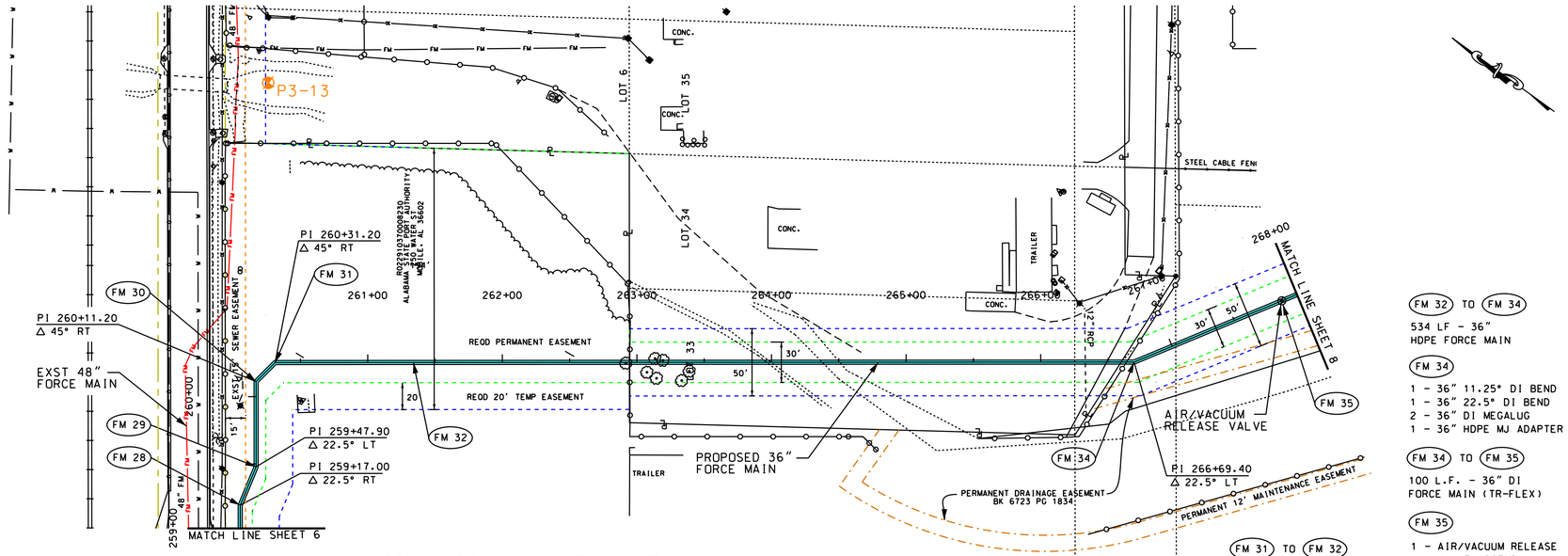

FM 27 TO FM 28
20 LF - 36" DI FORCE MAIN (TJ)

FM 28
1 - 36" 22.5° DI BEND
2 - 36" DI MEGALUG

FM 28 TO FM 29
30 LF - 36" DI FORCE MAIN (TR-FLEX)

FM 29
1 - 36" 22.5° DI BEND
2 - 36" DI MEGALUG

FM 29 TO FM 30
60 LF - 36" DI FORCE MAIN (TR-FLEX)

FM 30
1 - 36" 45° DI BEND
2 - 36" DI MEGALUG

FM 30 TO FM 31
20 LF - 36" DI FORCE MAIN (TR-FLEX)

FM 31
1 - 36" 45° DI BEND
2 - 36" DI MEGALUG

FM 31 TO FM 32
100 LF - 36" DI FORCE MAIN (TR-FLEX)

FM 32
1 - 36" 11.25° DI BEND
1 - 36" DI MEGALUG
1 - 36" HDPE MJ ADAPTER

FM 32 TO FM 34
534 LF - 36" HDPE FORCE MAIN

FM 34
1 - 36" 11.25° DI BEND
1 - 36" 22.5° DI BEND
2 - 36" DI MEGALUG
1 - 36" HDPE MJ ADAPTER

FM 34 TO FM 35
100 L.F. - 36" DI FORCE MAIN (TR-FLEX)

FM 35
1 - AIR/VACUUM RELEASE VALVE ASSEMBLY
20 LF DI PIPE (TJ)
2 - 36" DI MEGALUG

FM 35 TO FM 36
157 LF - 36" DI FORCE MAIN (TR-FLEX)

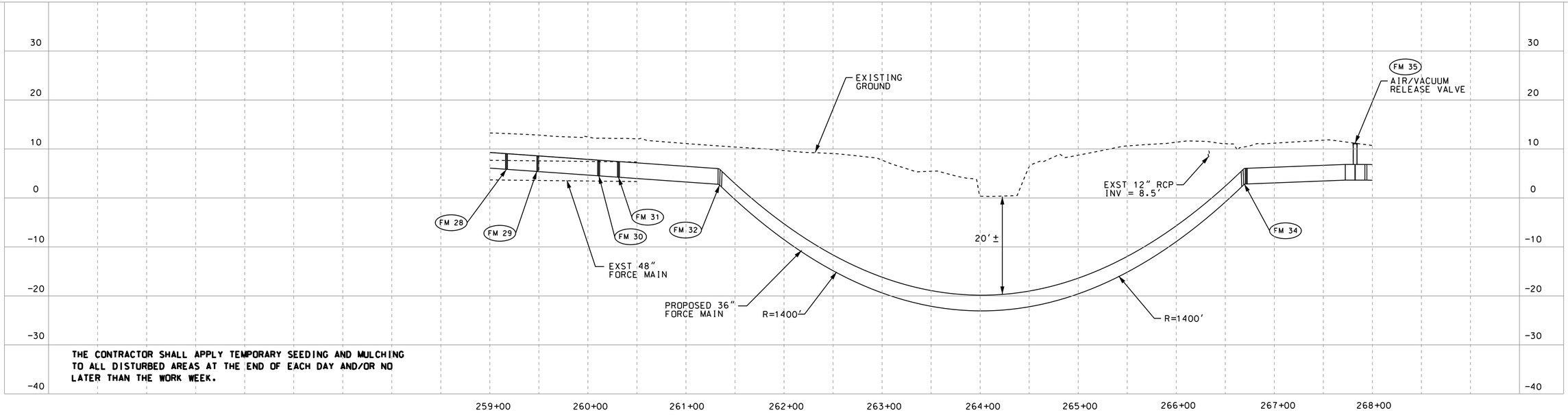

THE CONTRACTOR SHALL APPLY TEMPORARY SEEDING AND MULCHING TO ALL DISTURBED AREAS AT THE END OF EACH DAY AND/OR NO LATER THAN THE WORK WEEK.

REVISION

McCrory Williams
INCORPORATED
Engineers Surveyors

3207 INTERNATIONAL DR., SUITE G
MOBILE, ALABAMA
36606
PHONE: (251) 476-4720
FAX: (251) 476-4721
EMAIL: mail@mcwinc.com

M5712-2650
####

ESLAVA CREEK FORCE MAIN REPLACEMENT

PLAN/PROFILE STA 259+00 TO STA 268+00

BOARD OF WATER AND SEWER COMMISSIONERS OF THE CITY OF MOBILE

SCALE: 1" = 50' HORZ 1" = 10' VERT	DATE: 2019	DRAWN BY: AKE	APPROVED BY: WEW	SHEET 7 OF 19

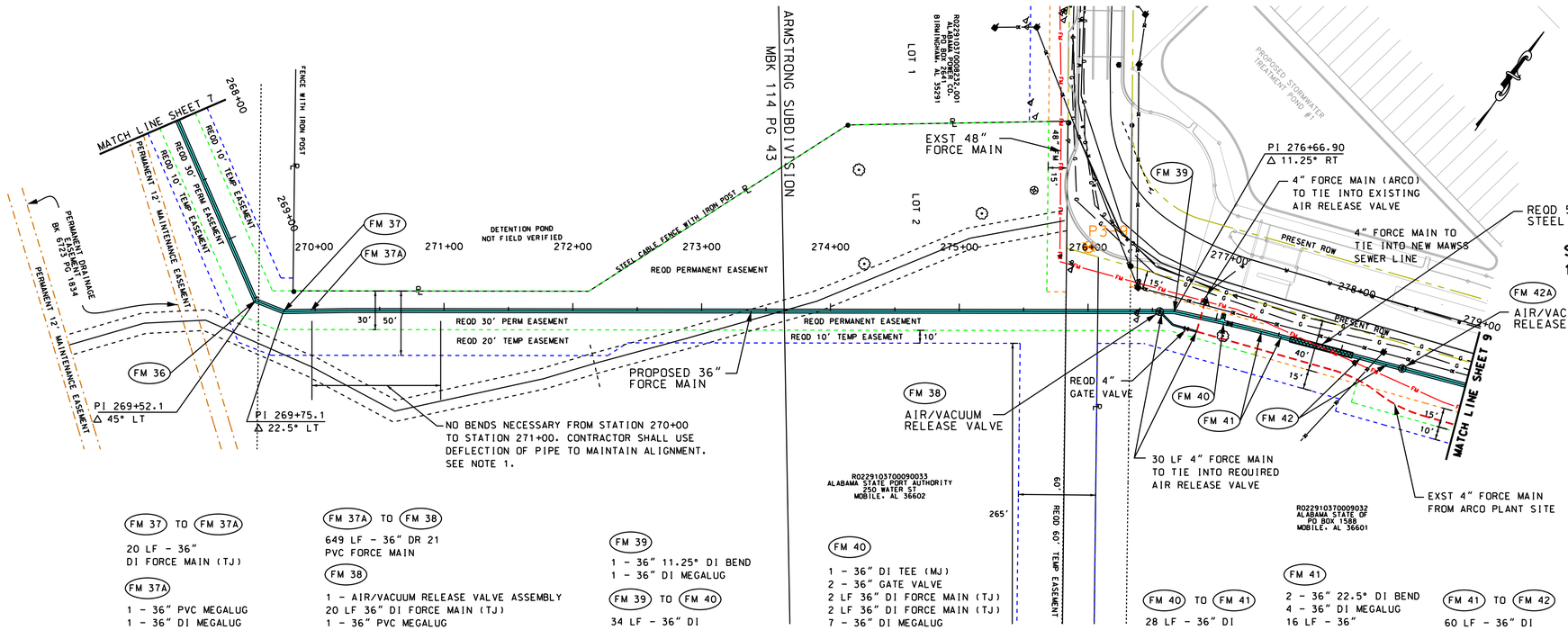

FM 35 TO FM 36
157 LF - 36" DI
FORCE MAIN (TR-FLEX)

FM 36
1 - 36" 45° DI BEND
2 - 36" DI MEGALUG

FM 36 TO FM 37
20 LF - 36"
DI FORCE MAIN (TJ)

FM 37
1 - 36" 22.5° DI BEND
2 - 36" DI MEGALUG

FM 37 TO FM 37A
20 LF - 36"
DI FORCE MAIN (TJ)

FM 37A
1 - 36" PVC MEGALUG
1 - 36" DI MEGALUG
1 - 36' MJ SLEEVE

FM 37A TO FM 38
649 LF - 36" DR 21
PVC FORCE MAIN

FM 38
1 - AIR/VACUUM RELEASE VALVE ASSEMBLY
20 LF 36" DI FORCE MAIN (TJ)
1 - 36" PVC MEGALUG
1 - 36" DI MEGALUG

FM 39
1 - 36" 11.25° DI BEND
1 - 36" DI MEGALUG

FM 39 TO FM 40
34 LF - 36" DI
FORCE MAIN (TJ)

FM 40
1 - 36" DI TEE (MJ)
2 - 36" GATE VALVE
2 LF 36" DI FORCE MAIN (TJ)
2 LF 36" DI FORCE MAIN (TJ)
7 - 36" DI MEGALUG
1 - 36" DI CAP

FM 40 TO FM 41
28 LF - 36" DI
FORCE MAIN (TJ)

FM 41
2 - 36" 22.5° DI BEND
4 - 36" DI MEGALUG
16 LF - 36"
DI FORCE MAIN (TJ)

FM 41 TO FM 42
60 LF - 36" DI
FORCE MAIN (TR-FLEX)

FM 42
2 - 36" 22.5° DI BEND
4 - 36" DI MEGALUG
15 LF - 36"
DI FORCE MAIN (TJ)

FM 42A
1 - AIR/VACUUM RELEASE VALVE ASSEMBLY
20 LF 36" DI FORCE MAIN (TJ)
1 - 36" DI MEGALUG

FM 42A TO FM 43
67 LF - 36" DI
FORCE MAIN (TRI-FLEX)

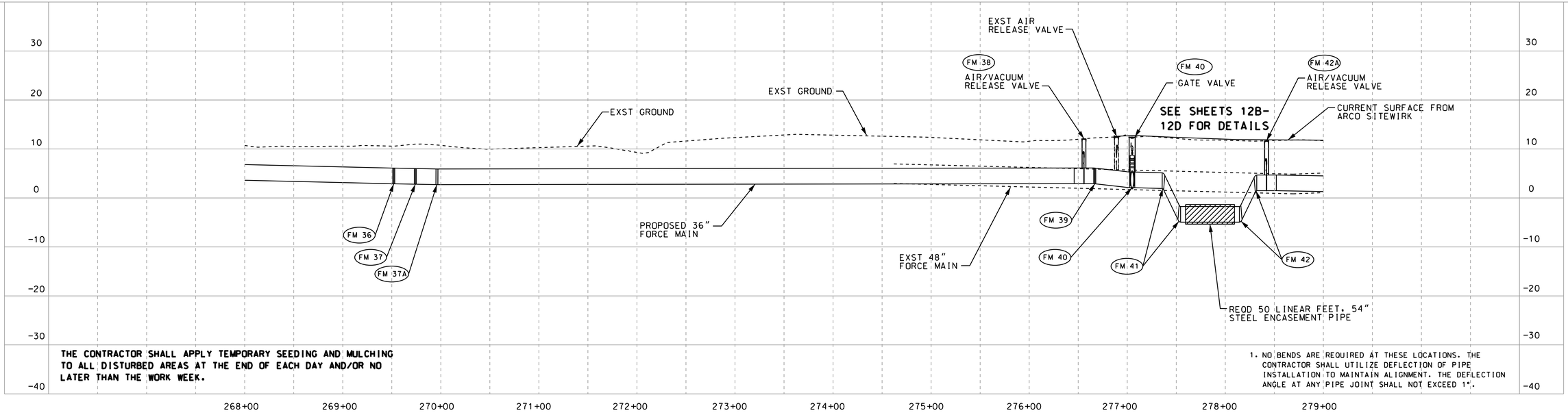

THE CONTRACTOR SHALL APPLY TEMPORARY SEEDING AND MULCHING TO ALL DISTURBED AREAS AT THE END OF EACH DAY AND/OR NO LATER THAN THE WORK WEEK.

1. NO BENDS ARE REQUIRED AT THESE LOCATIONS. THE CONTRACTOR SHALL UTILIZE DEFLECTION OF PIPE INSTALLATION TO MAINTAIN ALIGNMENT. THE DEFLECTION ANGLE AT ANY PIPE JOINT SHALL NOT EXCEED 1°.

REVISION

McCrory Williams
INCORPORATED
Engineers Surveyors

3207 INTERNATIONAL DR., SUITE G
MOBILE, ALABAMA
36606
PHONE: (251) 476-4720
FAX: (251) 476-4721
EMAIL: mail@mcwinc.com

M5712-2650
####

ESLAVA CREEK FORCE MAIN REPLACEMENT

PLAN/PROFILE STA 268+00 TO STA 279+00

BOARD OF WATER AND SEWER COMMISSIONERS OF THE CITY OF MOBILE

SCALE: 1" = 50' HORZ 1" = 10' VERT	DATE: 2019	DRAWN BY: AKE	APPROVED BY: WEW	SHEET 8 OF 19

FRAC-OUT CONTINGENCY PLAN NOTES

1. DIRECTIONAL DRILLING ACTIVITIES UTILIZE A BENTONITE CLAY AND WATER SLURRY FOR LUBRICATION OF THE DRILL PATH, AND THE SIGNIFICANT HYDRAULIC PRESSURES THAT ARE REQUIRED PRODUCE THE POTENTIAL FOR THE SLURRY TO FRAC-OUT TO THE GROUND SURFACE OR AN ENVIRONMENTALLY SENSITIVE WATERWAY. THEREFORE, IN ANTICIPATION OF DIRECTIONAL DRILLING ACTIVITIES FOR THIS PROJECT, THE FOLLOWING PLAN SHALL BE IMPLEMENTED BY THE CONTRACTOR.

2. ALL PERSONEL ON SITE DURING DIRECTIONAL DRILLING OPERATIONS SHALL BE TRAINED TO DETECT AND RESPOND TO FRAC-OUT CONDITION AND ALL NECESSARY DRILLING EQUIPMENT SHALL BE INSPECTED DAILY FOR LEAKS OR DEFECTS THAT COULD RESULT IN SPILLAGE OF DRILLING MUD. THIS IS THE SITE FOREMANS RESONSIBILITY PRIOR TO THE COMMENCEMENT OF ANY DRILLING OPERATIONS. CONTAINMENT AND CLEANUP PROVISIONS (SAND BAGS, STRAW BALES, SPILL BOOMS, PORTABLE PUMPS, VAC-TRUCKS, ETC.) SHALL BE ON SITE OR NEARBY, READY FOR DEPLOYMENT WITHIN 15 MINUTES. BASED ON PAST DRILLING EXPERIENCE IN SIMILAR CONDITIONS SELECT DRILLING PRESSURES AND DEPTHS THAT MINIMIZE THE POTENTIAL FOR FRAC-OUT.

3. DURING DRILLING OPERATIONS PERSONEL SHALL BE ACTIVELY LOOKING FOR ANY SURFACING OF DRILLING MUD, AND THE DRILL RIG OPERATION SHALL CONTINUOUSLY MONITOR THE DRILLING MUD PRESSURE, LOOKING FOR SUDDEN DROPS THAT COULD INDICATE A FRAC-OUT. ALL DRILLING WORK SHALL CEASE IMMEDIATELY UPON DISCOVERY OF A FRAC-OUT CONDITION AND SYSTEM PRESSURE SHALL BE RELIEVED TO PREVENT CONTINUED SPILLAGE.

4. UPON DISCOVERY OF A FRAC-OUT, ISOLATE THE AFFECTED AREA WITH APPROPRIATE MEASURES. DEPENDING ON WHETHER THE FRAC-OUT OCCURED ON LAND OR IN A WATERWAY.INSTALL SILT FENCE, STRAW BALE, FIBER LOGS OR EQUIVALENT MEASURES AROUND A SPILL ON LAND TO COMPLETELY CONTAIN THE SPILL AND PREVENT ITS TRANSPORT TO WATERWAYS. FOR A FRAC-OUT IN WATER, ISOLATE THE AFFECTED AREA AS RAPIDLY AS POSSIBLE WITH SAND BAGS, SPILL BOOMS, CURTAINS, OR THEIR EQUIVALENT. UTILIZE AMONIC POLYMERS WITHIN A CONTAINED SPILL IN WATERWAYS TO ASSIST IN FLOCCULATION AND REMOVAL. SITE FOREMAN IS TO IMMEDIATELY NOTIFY PROJECT INSPECTOR AND/OR ENGINEER WHO WILL CONTACT SYSTEM OPERATIONS TO ISSUE AN ENVIRONMENTAL ALERT.

5. FOR MINOR SPILLS THAT HAVE BEN SUCCESFULLY CONTAINED, THE SITE FOREMAN SHALL BE RESPONSIBLE TO DETERMINE WHETHER THE LEAK CAN BE STOPPED SUCH THAT DRILLING OPERATIONS CAN BE RESTARTED OR WHETHER THE BORE PATH OR INSTALLATION MUST BE ABANDONED FOR AN ALTERNATE.

6. COMPLETELY REMOVE THE SPILL MATERIAL, EITHER MANUALLY OR WITH A VAC-TRUCK. AFTER DRILLING OPERATIONS HAVE BEEN COMPLETED OR ABANDONED, REMOVE ANY INSTALLED CONTAINMENT MEASURES AND RETURN THE SITE TO ITS PRECONSTRUCTION CONTOURS AND CONDITION. DISPOSE OF ANY SPILLED MATERIAL AT AN APPROVED FACILITY IN ACCORDANCE WITH ALL APPLICABLE LAWS AND REGULATIONS.

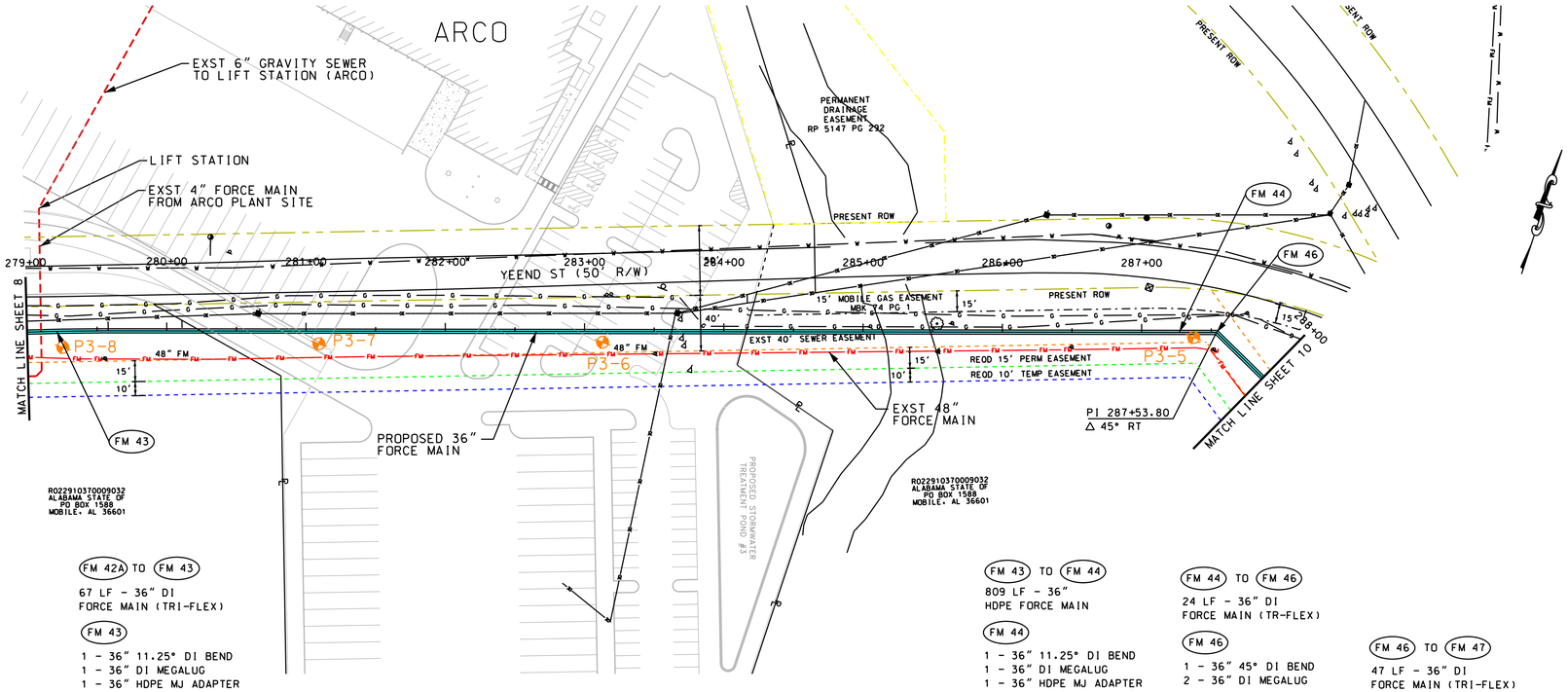

FM 42A TO FM 43
67 LF - 36" DI FORCE MAIN (TRI-FLEX)

FM 43
1 - 36" 11.25° DI BEND
1 - 36" DI MEGALUG
1 - 36" HDPE MJ ADAPTER

FM 43 TO FM 44
809 LF - 36" HDPE FORCE MAIN

FM 44
1 - 36" 11.25° DI BEND
1 - 36" DI MEGALUG
1 - 36" HDPE MJ ADAPTER

FM 44 TO FM 46
24 LF - 36" DI FORCE MAIN (TR-FLEX)

FM 46
1 - 36" 45° DI BEND
2 - 36" DI MEGALUG

FM 46 TO FM 47
47 LF - 36" DI FORCE MAIN (TRI-FLEX)

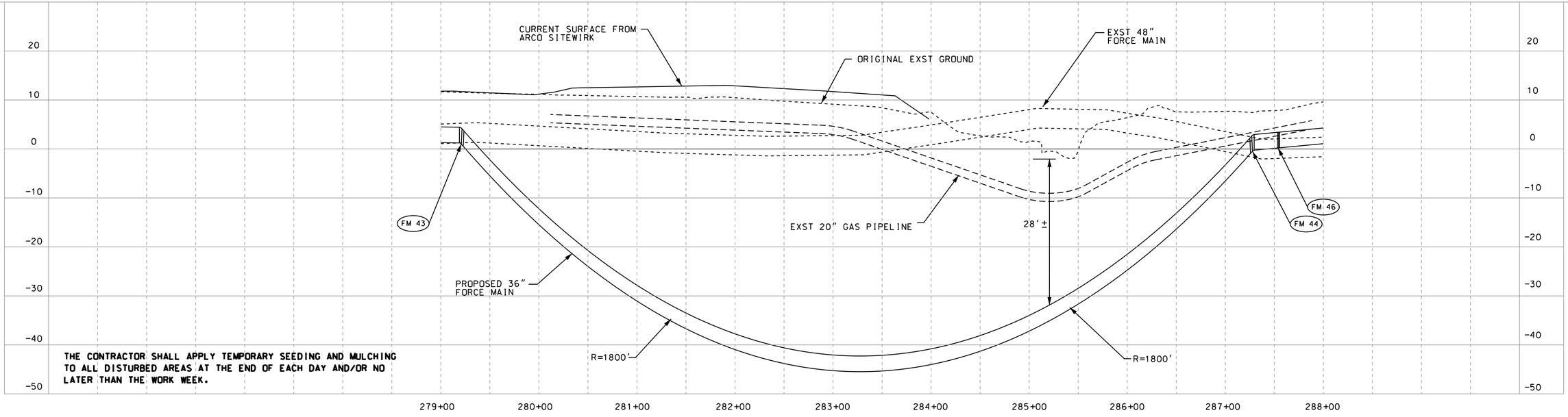

THE CONTRACTOR SHALL APPLY TEMPORARY SEEDING AND MULCHING TO ALL DISTURBED AREAS AT THE END OF EACH DAY AND/OR NO LATER THAN THE WORK WEEK.

REVISION

McCrory Williams
INCORPORATED
Engineers Surveyors
3207 INTERNATIONAL DR., SUITE G
MOBILE, ALABAMA
36606
PHONE: (251) 476-4720
FAX: (251) 476-4721
EMAIL: mail@mcwinc.com

M5712-2650
####

ESLAVA CREEK FORCE MAIN REPLACEMENT

PLAN/PROFILE STA 279+00 TO STA 288+00

BOARD OF WATER AND SEWER COMMISSIONERS OF THE CITY OF MOBILE

SCALE: 1" = 50' HORZ 1" = 10' VERT	DATE: 2019	DRAWN BY: AKE	APPROVED BY: WEW	SHEET 9 OF 19

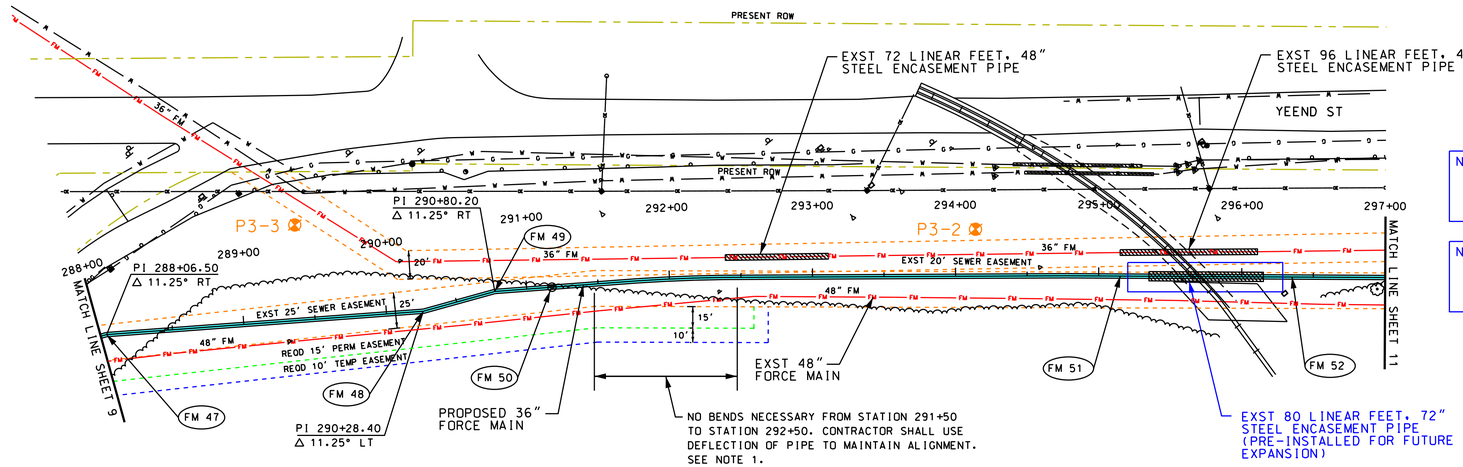

NOTE: CONTRACTOR TO CONTACT PETER OLIVERO - ASPA, AND CLIFF MELTON - RAILROAD GM PRIOR TO START OF CONSTRUCTION FOR SAFELTY PROTOCOL REQUIREMENTS.

NOTE: ALL CONTRACTOR ACTIVITIES SHALL BE IN ACCORDANCE WITH THE RULES AND GUIDLINES OF THE ALABAMA STATE PORT AUTHORITY FOR CONSTRUCTION AT AN ACTIVE TRACK.

FM 46 TO FM 47
47 LF - 36" DI
FORCE MAIN (TR-FLEX)

FM 47
1 - 36" 11.25° DI BEND
2 - 36" PVC MEGALUG

FM 47 TO FM 48
220 LF - 36" DR 21
PVC FORCE MAIN

FM 48
1 - 36" 11.25° DI BEND
1 - 36" PVC MEGALUG
1 - 36" DI MEGALUG

FM 48 TO FM 49
50 LF - 36" DI
FORCE MAIN (TJ)

FM 49
1 - 36" 11.25° DI BEND
2 - 36" DI MEGALUG

FM 49 TO FM 50
29 LF - 36" DI
FORCE MAIN (TJ)

FM 50
1 - AIR/VACUUM RELEASE VALVE ASSEMBLY
20 LF 36" DI FORCE MAIN (TJ)
2 - 36" PVC MEGALUG
1 - 36" DI MEGALUG
1 - 36" MJ SLEEVE

FM 50 TO FM 51
384 LF - 36" DR 21
PVC FORCE MAIN

FM 51
1 - 36" PVC MEGALUG
1 - 36" DI MEGALUG
1 - 36" MJ SLEEVE

FM 51 TO FM 52
120 LF - 36" DI
FORCE MAIN (TR-FLEX)

FM 52
1 - 36" DI MEGALUG
1 - 36" PVC MEGALUG
1 - 36" MJ SLEEVE

FM 52 TO FM 53
155 LF - 36" DR 21
PVC FORCE MAIN

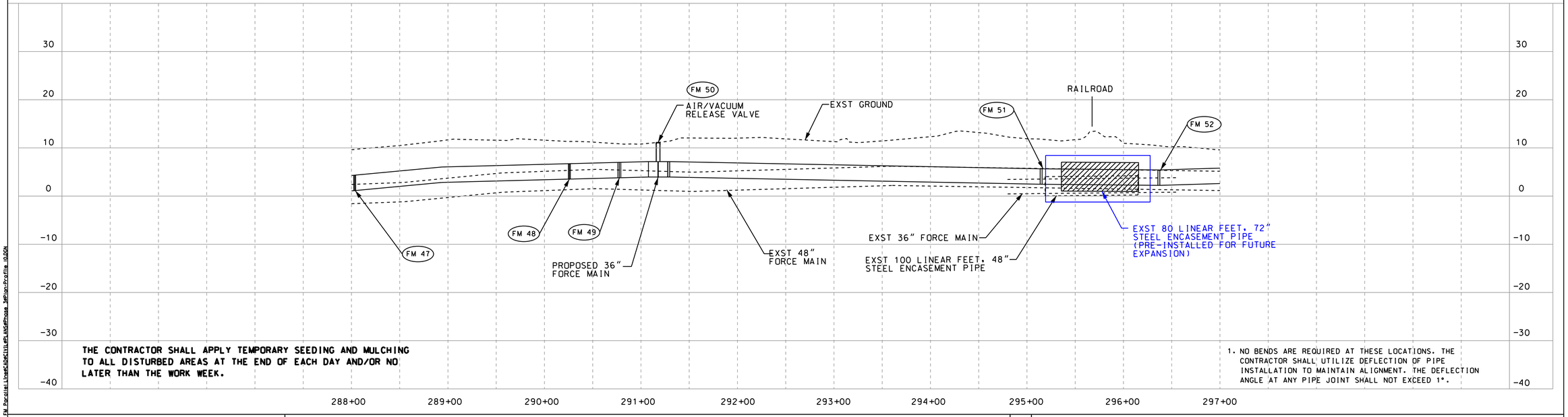

THE CONTRACTOR SHALL APPLY TEMPORARY SEEDING AND MULCHING TO ALL DISTURBED AREAS AT THE END OF EACH DAY AND/OR NO LATER THAN THE WORK WEEK.

1. NO BENDS ARE REQUIRED AT THESE LOCATIONS. THE CONTRACTOR SHALL UTILIZE DEFLECTION OF PIPE INSTALLATION TO MAINTAIN ALIGNMENT. THE DEFLECTION ANGLE AT ANY PIPE JOINT SHALL NOT EXCEED 1°.

REVISION

McCrory Williams
INCORPORATED
Engineers Surveyors
3207 INTERNATIONAL DR., SUITE G
MOBILE, ALABAMA
36606
PHONE: (251) 476-4720
FAX: (251) 476-4721
EMAIL: mail@mcwinc.com

M5712-2650
####

ESLAVA CREEK FORCE MAIN REPLACEMENT

PLAN/PROFILE STA 288+00 TO STA 297+00

BOARD OF WATER AND SEWER COMMISSIONERS OF THE CITY OF MOBILE

SCALE: 1" = 50' HORZ 1" = 10' VERT	DATE: 2019	DRAWN BY: AKE	APPROVED BY: WEW	SHEET 10 OF 19

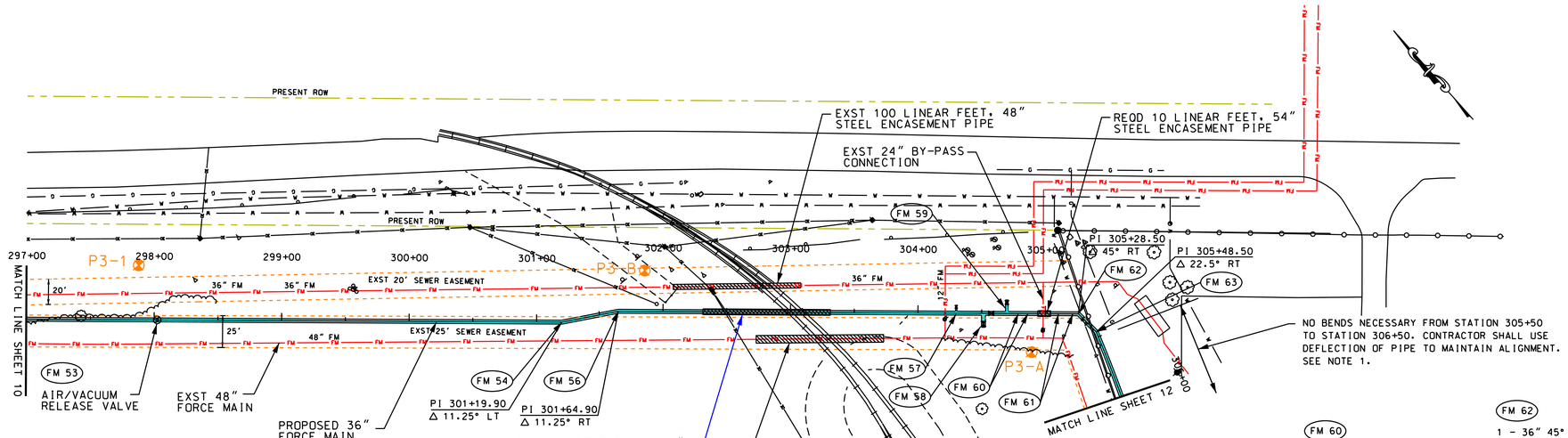

FM 52 TO FM 53
155 LF - 36" DR 21
PVC FORCE MAIN

FM 53
1 - AIR/VACUUM RELEASE VALVE ASSEMBLY
20 LF 36" DI FORCE MAIN (TJ)
2 - 36" PVC MEGALUG
1 - 36" DI MEGALUG
1 - 36" MJ SLEEVE

FM 53 TO FM 54
305 LF - 36" DR 21
PVC FORCE MAIN

FM 54
1 - 36" 11.25° DI BEND
1 - 36" PVC MEGALUG
1 - 36" DI MEGALUG

FM 54 TO FM 56
43 LF - 36" DI
FORCE MAIN (TJ)

FM 56
1 - 36" 11.25° DI BEND
2 - 36" DI MEGALUG

FM 56 TO FM 57
260 LF - 36" DI
FORCE MAIN (TR-FLEX)

FM 57
1 - 36"x36"x12" TEE (MJ)
2 - 36" DI MEGALUG
2 LF 12" DI FORCE MAIN (TJ)
3 - 12" DI MEGALUG
1 - 12" GATE VALVE
1 - 12" DI CAP

FM 57 TO FM 58
20 LF - 36" DI
FORCE MAIN (TJ)

FM 58
1 - 36" DI TEE (MJ)
2 - 36" GATE VALVE
6 LF 36" DI FORCE MAIN (TJ)
2 LF 36" DI FORCE MAIN (TJ)
7 - 36" DI MEGALUG
1 - 36" DI CAP

FM 58 TO FM 59
22 LF - 36" DI
FORCE MAIN (TJ)

FM 59
1 - 36"x36"x24" TEE (MJ)
2 - 36" DI MEGALUG
6 LF 24" DI FORCE MAIN (TJ)
3 - 24" DI MEGALUG
1 - 24" GATE VALVE
1 - 24" DI CAP

FM 59 TO FM 60
9 LF - 36" DI
FORCE MAIN (TJ)

FM 60
2 - 36" 22.5° DI BEND
4 - 36" DI MEGLUG
7 LF - 36" DI
FORCE MAIN (TJ)

FM 60 TO FM 61
20 LF - 36" DI
FORCE MAIN (TJ)

FM 61
2 - 36" 22.5° DI BEND
4 - 36" DI MEGLUG
11 LF - 36" D1
FORCE MAIN (TJ)

FM 62
1 - 36" 45° DI BEND
2 - 36" DI MEGALUG

FM 62 TO FM 63
19 LF - 36" DI
FORCE MAIN (TJ)

FM 63
1 - 36" 45° DI BEND
1 - 36" DI MEGALUG
1 - 36" PVC MEGALUG

FM 63 TO FM 64
660 LF - 36" DR 21
PVC FORCE MAIN

NOTE: CONTRACTOR TO CONTACT PETER OLIVERO - ASPA, AND CLIFF MELTON - RAILROAD GM PRIOR TO START OF CONSTRUCTION FOR SAFELTY PROTOCOL REQUIREMENTS.

NOTE: ALL CONTRACTOR ACTIVITIES SHALL BE IN ACCORDANCE WITH THE RULES AND GUIDLINES OF THE ALABAMA STATE PORT AUTHORITY FOR CONSTRUCTION AT AN ACTIVE TRACK.

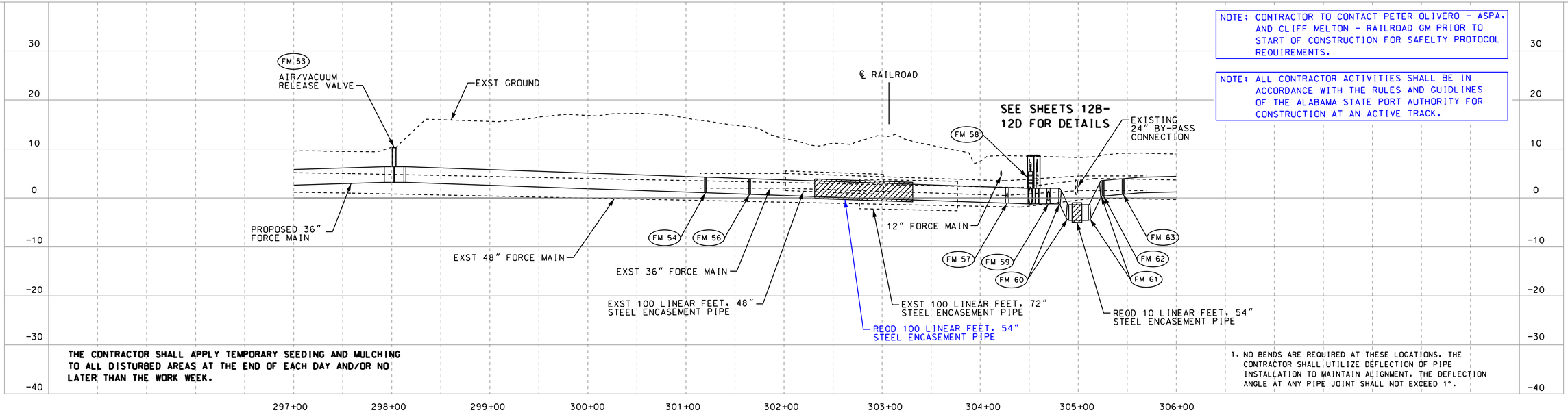

THE CONTRACTOR SHALL APPLY TEMPORARY SEEDING AND MULCHING TO ALL DISTURBED AREAS AT THE END OF EACH DAY AND/OR NO LATER THAN THE WORK WEEK.

1. NO BENDS ARE REQUIRED AT THESE LOCATIONS. THE CONTRACTOR SHALL UTILIZE DEFLECTION OF PIPE INSTALLATION TO MAINTAIN ALIGNMENT. THE DEFLECTION ANGLE AT ANY PIPE JOINT SHALL NOT EXCEED 1°.

REVISION

McCrory Williams
INCORPORATED
Engineers Surveyors
3207 INTERNATIONAL DR., SUITE G
MOBILE, ALABAMA
36606
PHONE: (251) 476-4720
FAX: (251) 476-4721
EMAIL: mail@mcwinc.com

M5712-2650 ####

ESLAVA CREEK FORCE MAIN REPLACEMENT

PLAN/PROFILE STA 297+00 TO STA 306+00

BOARD OF WATER AND SEWER COMMISSIONERS OF THE CITY OF MOBILE

SCALE: 1" = 50' HORZ 1" = 10' VERT	DATE: 2019	DRAWN BY: AKE	APPROVED BY: WEW	SHEET 11 OF 19

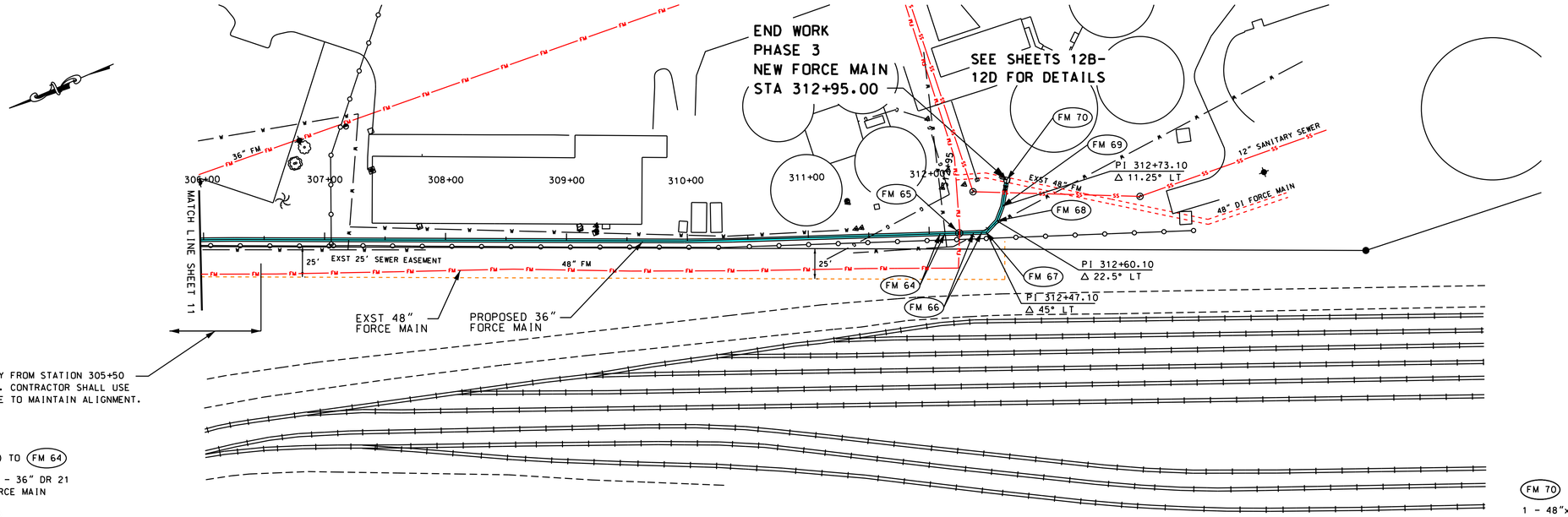

NO BENDS NECESSARY FROM STATION 305+50 TO STATION 306+50. CONTRACTOR SHALL USE DEFLECTION OF PIPE TO MAINTAIN ALIGNMENT. SEE NOTE 1.

FM 63 TO FM 64
656 LF - 36" DR 21
PVC FORCE MAIN

FM 64
2 - 36" 45° DI BEND
5 LF - 36"
DI FORCE MAIN (TJ)
3 - 36" DI MEGALUG
1 - 36" PVC MEGALUG

FM 65
1 - AIR RELEASE VALVE ASSEMBLY
20 LF 36" DI PIPE (TJ)

FM 66
2 - 36" 45° DI BEND
8 LF - 36"
DI FORCE MAIN (TJ)
4 - 36" DI MEGALUG

FM 67
1 - 36" 45° DI BEND
1 - 36" DI MEGALUG

FM 67 TO FM 68
12 LF - 36" DI
FORCE MAIN (TJ)

FM 68
1 - 36" 22.5° DI BEND
2 - 36" DI MEGALUG

FM 68 TO FM 69
11 LF - 36" DI
FORCE MAIN (TJ)

FM 69
1 - 36" 11.25° DI BEND
2 - 36" DI MEGALUG

FM 69 TO FM 70
13 LF - 36" DI
FORCE MAIN (TJ)

FM 70
1 - 48"x48"x36" DI TEE (MJ)
1 - 36" GATE VALVE
2 LF 36" FORCE MAIN (TJ)
2 LF 48" FORCE MAIN (TJ)
2 LF 48" FORCE MAIN (TJ)
3 - 36" DI MEGALUG
6 - 48" DI MEGALUG
2 - 48" MJ SLEEVE

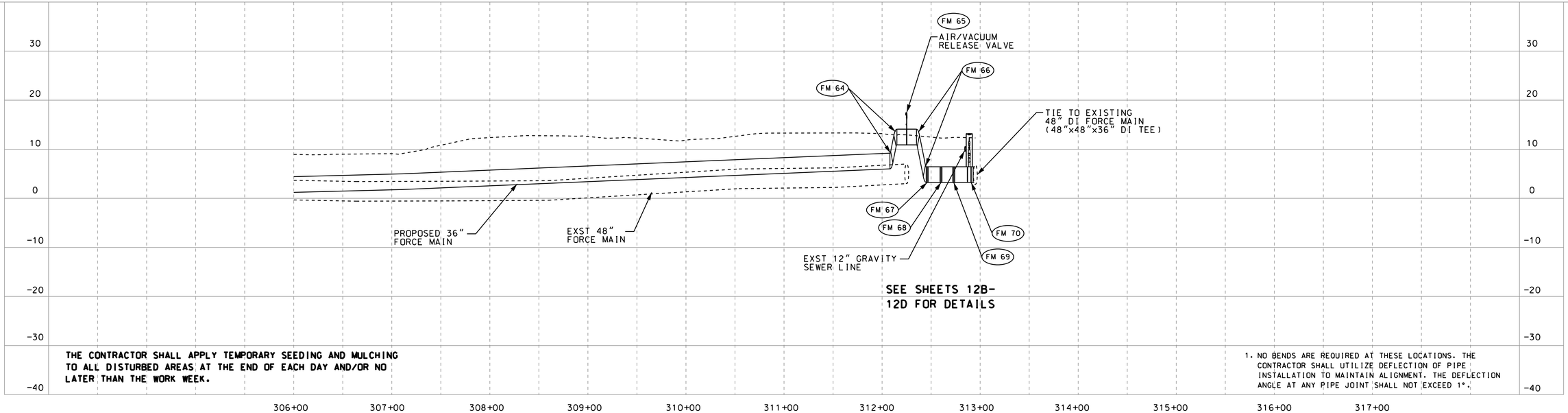

THE CONTRACTOR SHALL APPLY TEMPORARY SEEDING AND MULCHING TO ALL DISTURBED AREAS AT THE END OF EACH DAY AND/OR NO LATER THAN THE WORK WEEK.

1. NO BENDS ARE REQUIRED AT THESE LOCATIONS. THE CONTRACTOR SHALL UTILIZE DEFLECTION OF PIPE INSTALLATION TO MAINTAIN ALIGNMENT. THE DEFLECTION ANGLE AT ANY PIPE JOINT SHALL NOT EXCEED 1°.

REVISION

McCrory Williams
INCORPORATED
Engineers Surveyors

3207 INTERNATIONAL DR., SUITE G
MOBILE, ALABAMA
36606
PHONE: (251) 476-4720
FAX: (251) 476-4721
EMAIL: mail@mcwinc.com

M5712-2650
####

ESLAVA CREEK FORCE MAIN REPLACEMENT

PLAN/PROFILE STA 306+00 TO STA 317+00

BOARD OF WATER AND SEWER COMMISSIONERS OF THE CITY OF MOBILE

SCALE: 1" = 50' HORZ 1" = 10' VERT	DATE: 2019	DRAWN BY: AKE	APPROVED BY: WEW	SHEET 12 OF 19

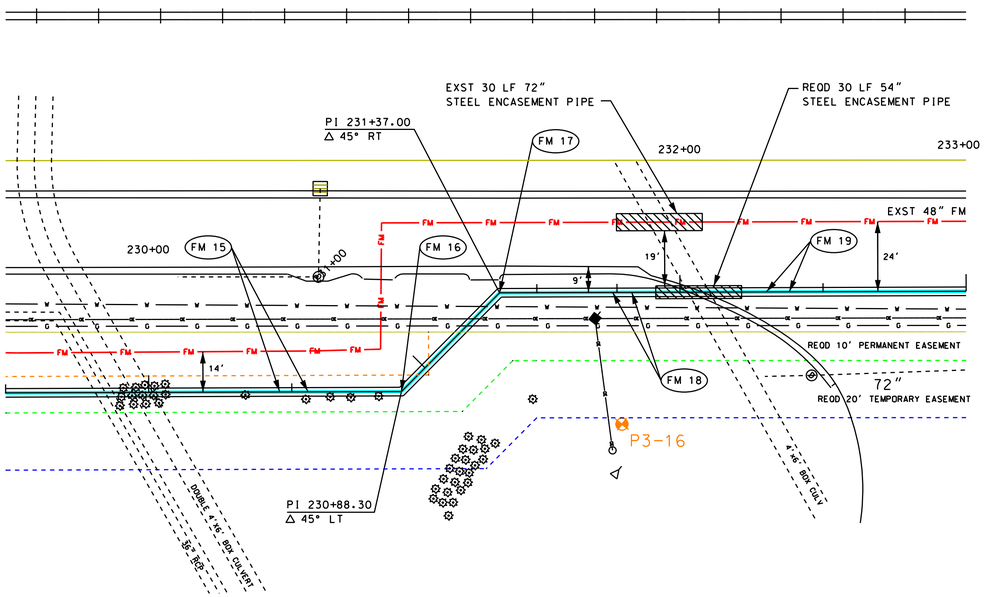

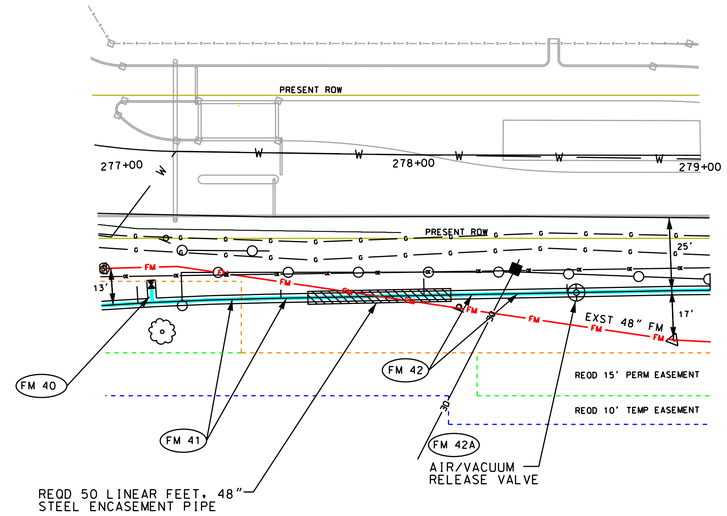

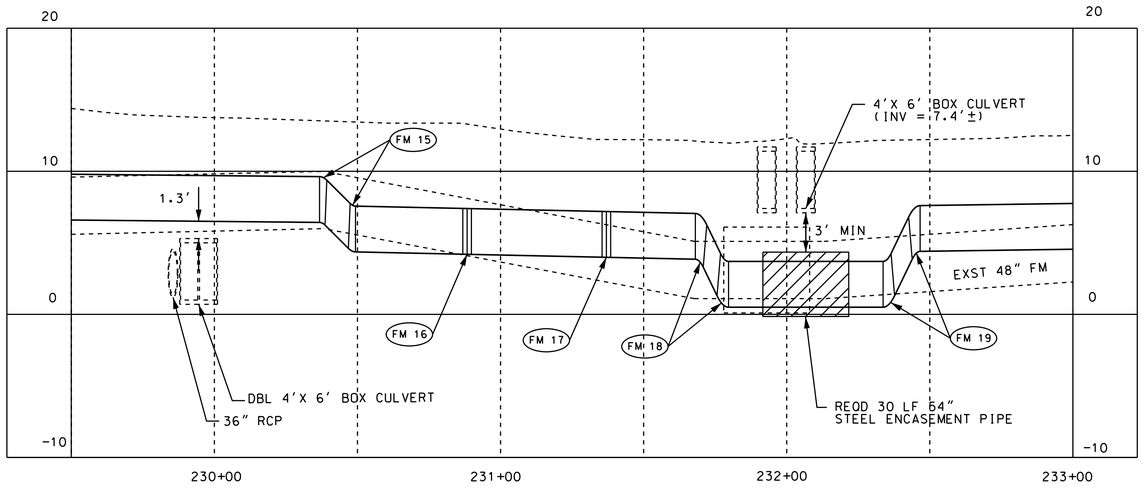

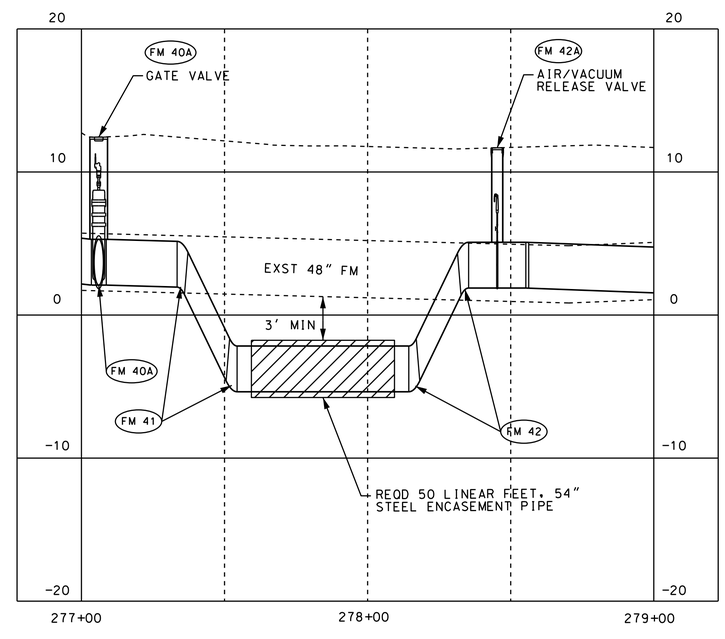

REVISION

McCrory Williams
INCORPORATED
Engineers Surveyors

3207 INTERNATIONAL DR., SUITE G
MOBILE, ALABAMA
36606
PHONE: (251) 476-4720
FAX: (251) 476-4721
EMAIL: mail@mcwinc.com

M5712-2650
####

ESLAVA CREEK FORCE MAIN REPLACEMENT

PLAN/PROFILE DETAILS

BOARD OF WATER AND SEWER COMMISSIONERS OF THE CITY OF MOBILE

SCALE:	DATE: 2019	DRAWN BY: AKE	APPROVED BY: WEW	SHEET 12A OF 19

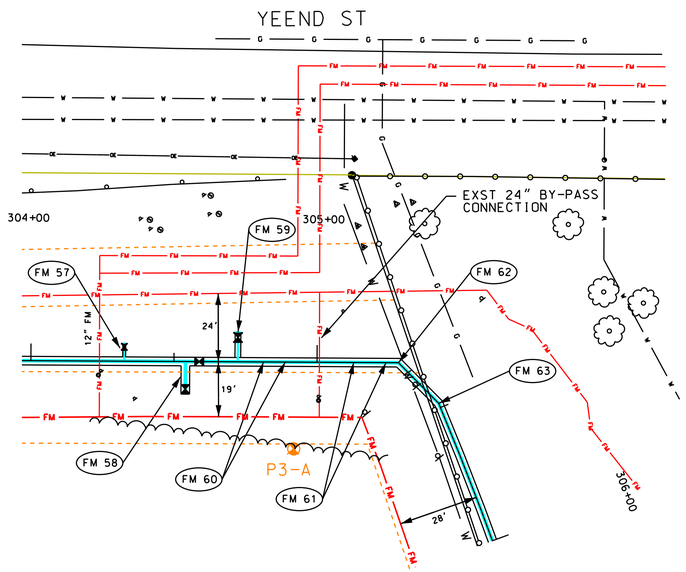

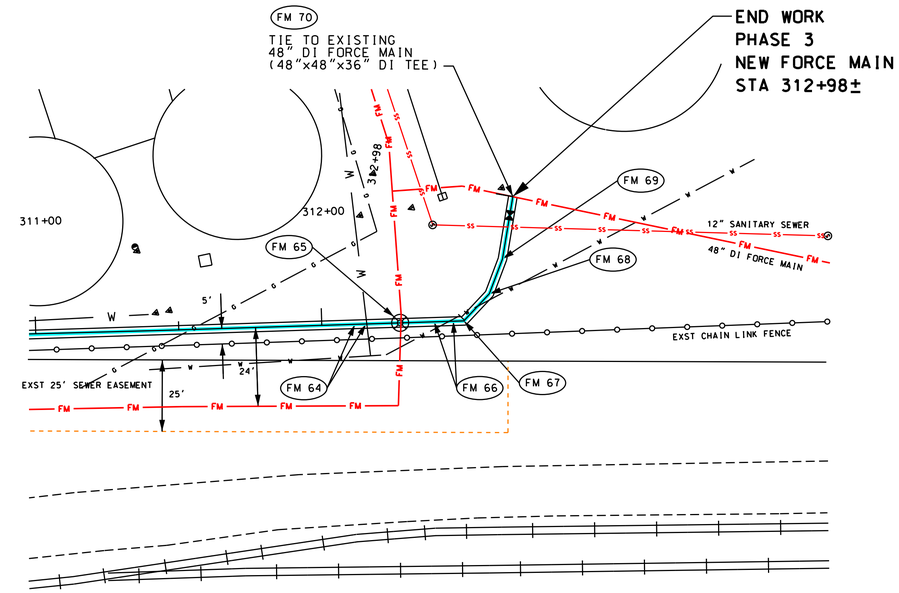

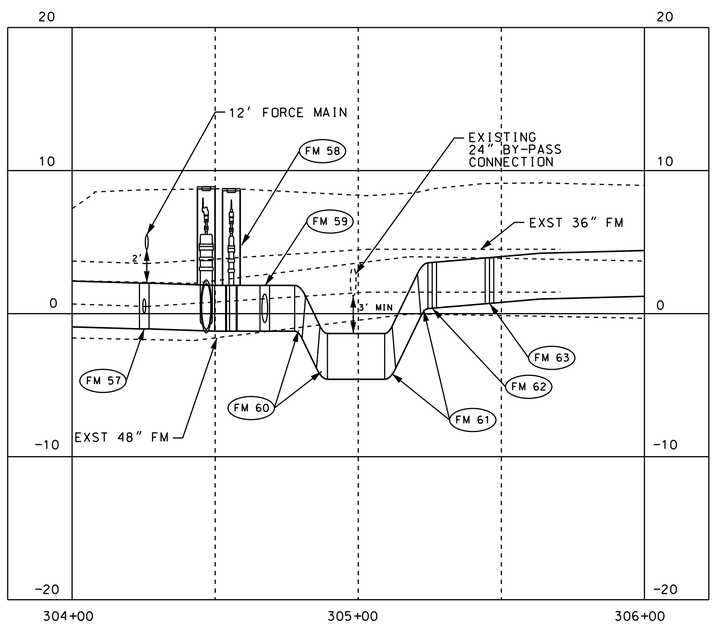

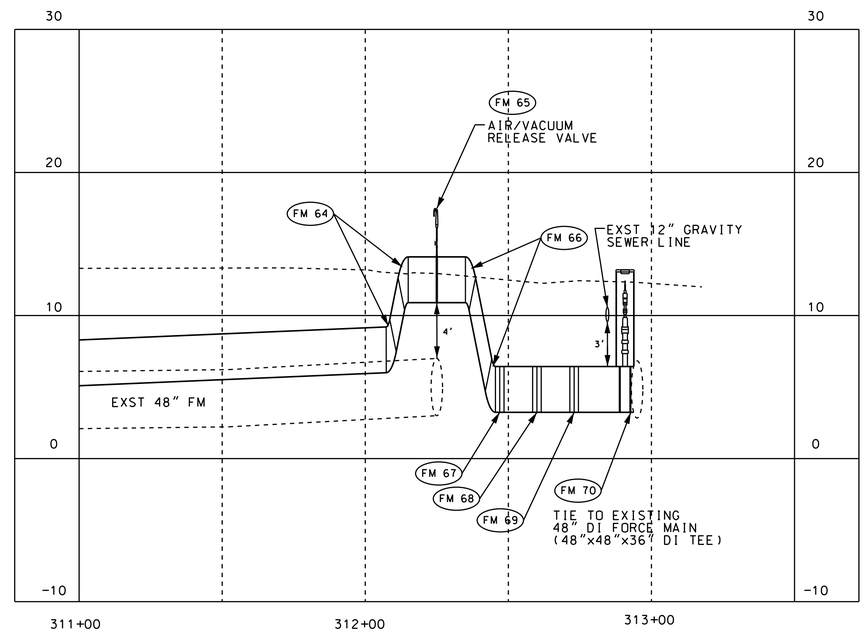

REVISION

McCrory Williams
INCORPORATED
Engineers Surveyors

3207 INTERNATIONAL DR., SUITE G
MOBILE, ALABAMA
36606
PHONE: (251) 476-4720
FAX: (251) 476-4721
EMAIL: mail@mcwinc.com

M5712-2650
####

ESLAVA CREEK FORCE MAIN REPLACEMENT

PLAN/PROFILE DETAILS

BOARD OF WATER AND SEWER COMMISSIONERS OF THE CITY OF MOBILE

SCALE:	DATE: 2019	DRAWN BY: AKE	APPROVED BY: WEW	SHEET 12B OF 19

CROSSOVER TO BE CONNECTED TO EXISTING 48" FORCE MAIN AND CONCRETE VALVE BOX DURING FUTURE SLIPLINING PHASE

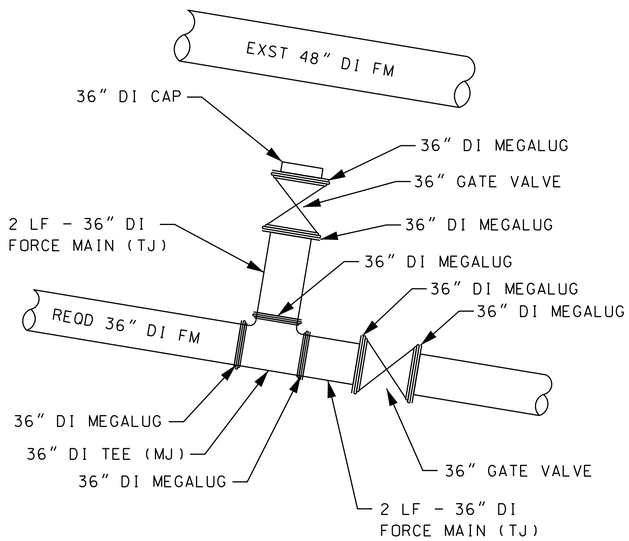

CROSSOVER DETAIL
STATION 277+05
(NTS)

CONNECTION TO EXISTING 12" FORCE MAIN SHALL BE MADE DURING FUTURE SLIPLINING PHASE

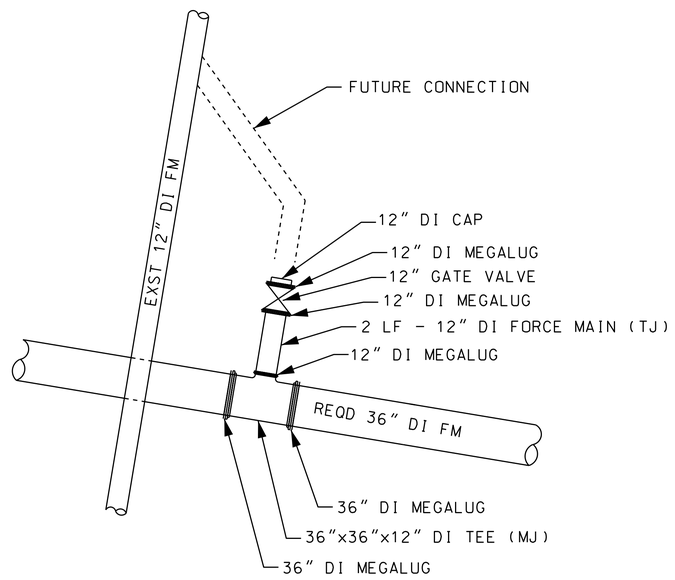

CONNECTION DETAIL
STATION 304+32
(NTS)

CROSSOVER TO BE CONNECTED TO EXISTING 48" FORCE MAIN AND CONCRETE VALVE BOX DURING FUTURE SLIPLINING PHASE

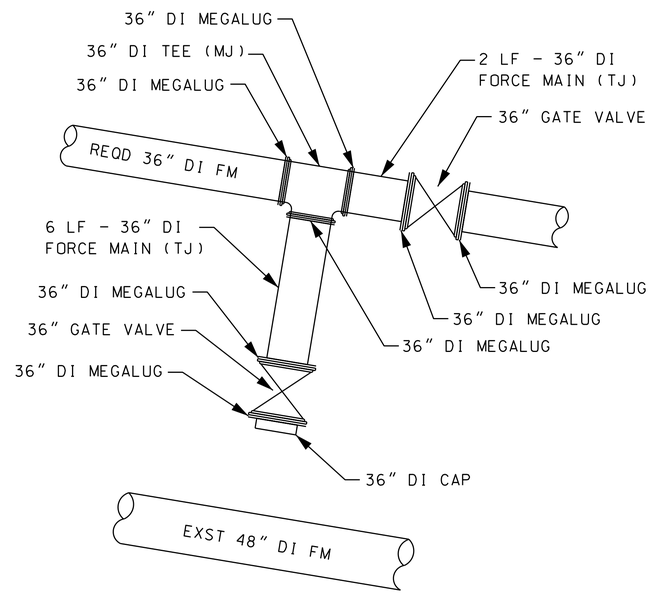

CROSSOVER DETAIL
STATION 304+51
(NTS)

REVISION	McCrory Williams INCORPORATED Engineers Surveyors	3207 INTERNATIONAL DR., SUITE G MOBILE, ALABAMA 36606 PHONE: (251) 476-4720 FAX: (251) 476-4721 EMAIL: mail@mcwinc.com	M5712-2650 ####	ESLAVA CREEK FORCE MAIN REPLACEMENT
				MISCELLANEOUS DETAILS
				BOARD OF WATER AND SEWER COMMISSIONERS OF THE CITY OF MOBILE
				SCALE: / DATE: 2019 / DRAWN BY: AKE / APPROVED BY: WEW / SHEET 12C OF 19

Gdb07126250_48in Eslava Creek FM Forcelui LineSCADECIVLdfA ANSIPlots 3PtUnc:Pcxfile Details.DCA001

CONNECTION TO EXISTING 36" FORCE MAIN AND CONCRETE VALVE BOX SHALL BE MADE DURING FUTURE SLIPLINING PHASE

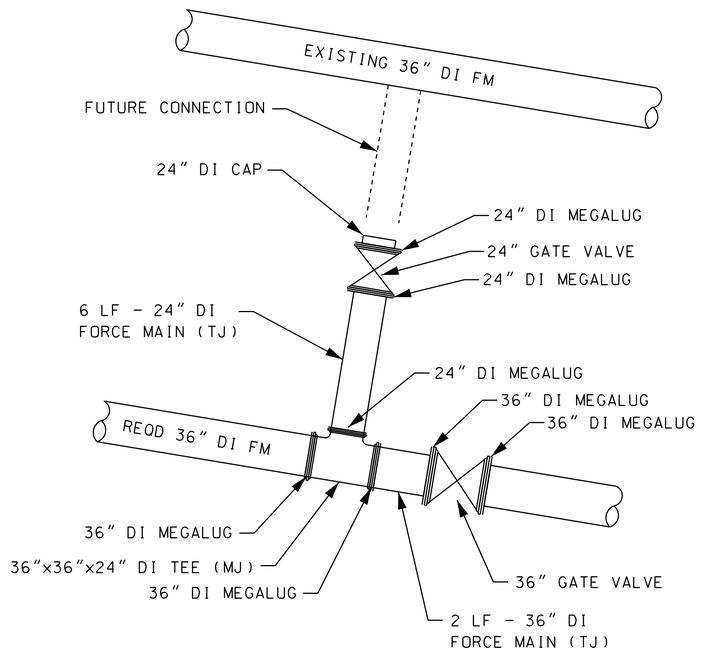

CROSSOVER DETAIL
STATION 304+70

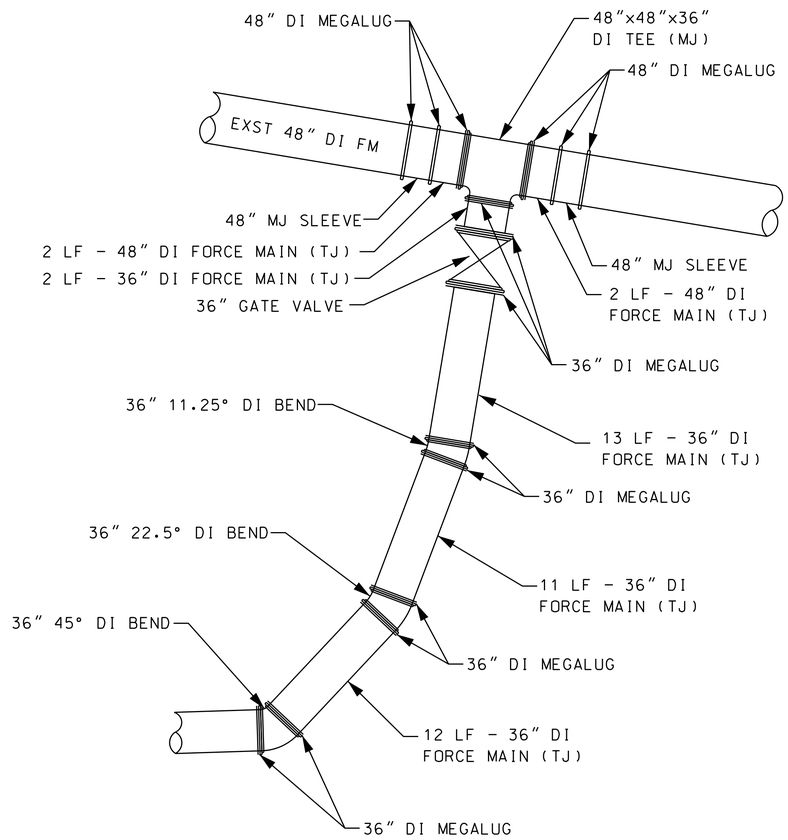

CONNECTION DETAIL
STATION 312+95
(NTS)

REVISION

McCrory Williams
INCORPORATED
Engineers Surveyors

3207 INTERNATIONAL DR., SUITE G
MOBILE, ALABAMA
36606
PHONE: (251) 476-4720
FAX: (251) 476-4721
EMAIL: mail@mcwinc.com

M5712-2650
####

ESLAVA CREEK FORCE MAIN REPLACEMENT

MISCELLANEOUS DETAILS

BOARD OF WATER AND SEWER COMMISSIONERS OF THE CITY OF MOBILE

SCALE:	DATE: 2019	DRAWN BY: AKE	APPROVED BY: WEW	SHEET 12D OF 19

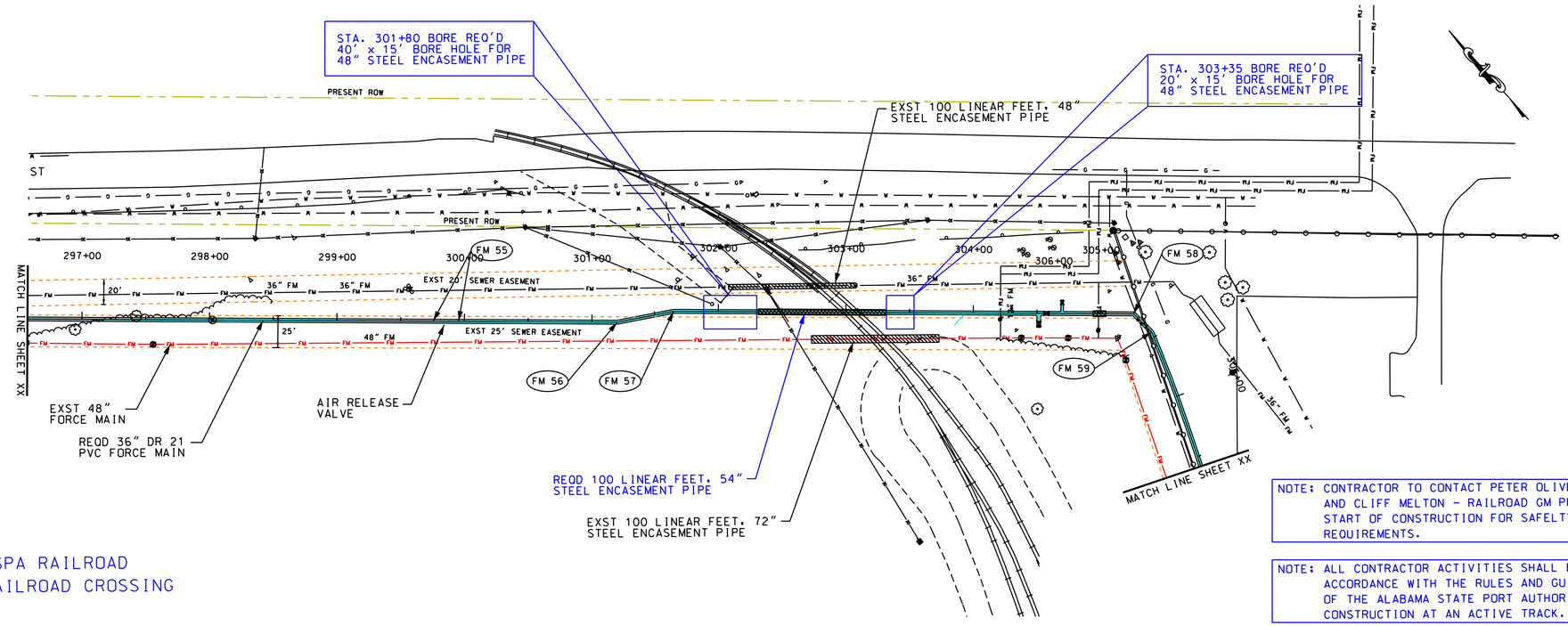

NOTE: CONTRACTOR TO CONTACT PETER OLIVERO - ASPA, AND CLIFF MELTON - RAILROAD GM PRIOR TO START OF CONSTRUCTION FOR SAFELTY PROTOCOL REQUIREMENTS.

NOTE: ALL CONTRACTOR ACTIVITIES SHALL BE IN ACCORDANCE WITH THE RULES AND GUIDLINES OF THE ALABAMA STATE PORT AUTHORITY FOR CONSTRUCTION AT AN ACTIVE TRACK.

AS SUBMITTED TO ASPA RAILROAD
FOR APPROVAL OF RAILROAD CROSSING

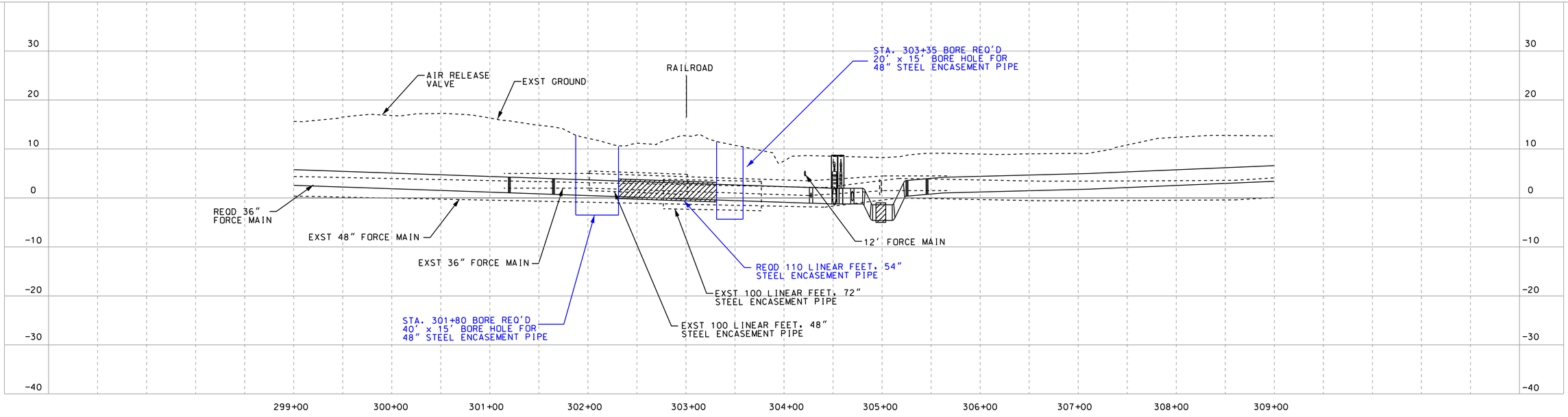

REVISION
REVISED TO ADD ADITIONAL 10 FEET TO CASING
PIPE, AND MOVE BORE HOLE TO APPRX. 12' FROM
TRACK

McCrory Williams
INCORPORATED
Engineers Surveyors

3207 INTERNATIONAL DR., SUITE G
MOBILE, ALABAMA
36606
PHONE: (251) 476-4720
FAX: (251) 476-4721
EMAIL: mail@mcwinc.com

M5712-2650
####

ESLAVA CREEK FORCE MAIN REPLACEMENT

PLAN/PROFILE STA 299+00 TO STA 309+00 (RAILROAD BORE)

BOARD OF WATER AND SEWER COMMISSIONERS OF THE CITY OF MOBILE

SCALE: 1" = 50' HORZ 1" = 10' VERT	DATE: 2019	DRAWN BY: AKE	APPROVED BY: WEW	SHEET 12E OF 19

REFERENCE PROJECT NO	FISCAL YEAR	SHEET NO

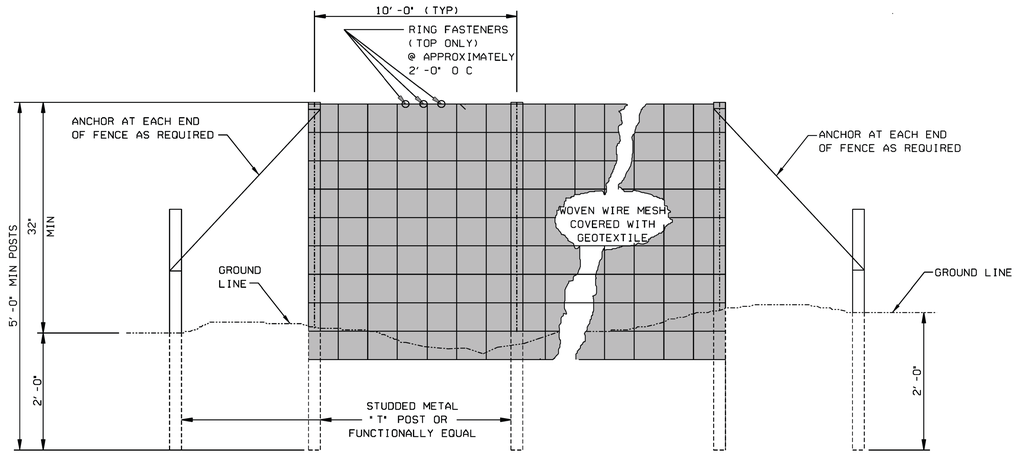

ELEVATION VIEW

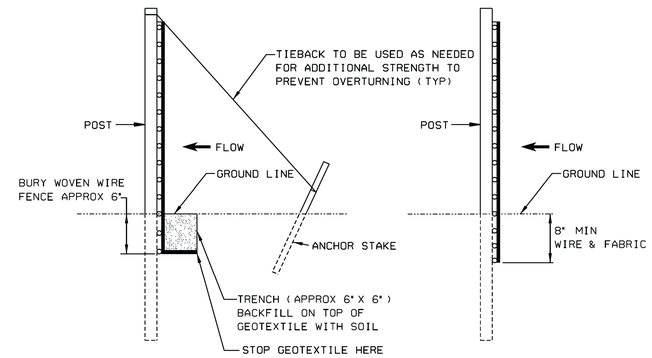

METHOD I

METHOD II
MECHANICAL INSTALLATION

SIDE VIEW

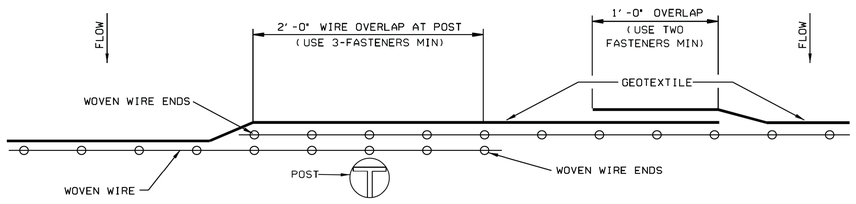

PLAN VIEW

REQUIRED LAPPING

NOTES:

1. METHOD II FENCE INSTALLATION ALSO TO INCLUDE ANCHORS AND TIEBACKS AS REQUIRED.
2. SILT FENCE SHALL BE USED IN AREAS WHERE FLOW IS LOW TO MODERATE OR AS DIR BY THE ENGINEER.
3. SILT FENCES ARE TEMPORARY SEDIMENT CONTROL ITEMS THAT SHALL BE ERECTED DOWN GRADE OF ERODIBLE AREAS SUCH AS NEWLY GRADED FILL SLOPES AND ADJACENT TO STREAMS AND CHANNELS.
4. SILT FENCE SHOULD BE PLACED WELL INSIDE RIGHT-OF-WAY AND ALONG EDGE OF CLEARING LIMITS. THIS WILL ALLOW ROOM FOR ADDITIONAL BEST MANAGEMENT PRACTICES SUCH AS VEGATATED BUFFERS.
5. WHEREVER POSSIBLE SILT FENCES SHALL BE CONSTRUCTED ACROSS A LEVEL AREA IN THE SHAPE OF A SMILE. THIS AIDS IN PONDING OF RUNOFF AND FACILITATE SEDIMENTATION.
6. THE CONTRACTOR MAY ELECT TO USE EITHER INSTALLATION METHOD I OR METHOD II.
7. METHOD II INSTALLATION SHALL BE ACCOMPLISHED USING AN IMPLEMENT THAT IS MANUFACTURED FOR THE APPLICATION AND PROVIDES A CONFIGURATION MEETING THE REQUIREMENTS OF THE DETAIL.
8. SEE ALDOT LIST II-3 FOR APPROVED SILT FENCE GEOTEXTILES.

--SPECIFICATIONS--
CURRENT ALABAMA DEPARTMENT OF TRANSPORTATION

THIS DRAWING REPRESENTS DESIGNS PREPARED FOR USE BY THE ALABAMA DEPARTMENT OF TRANSPORTATION AND IS NOT TO BE COPIED, REPRODUCED, ALTERED, OR USED BY ANYONE, OR ANY ORGANIZATION, WITHOUT THE EXPRESSED WRITTEN CONSENT OF THE ALABAMA DEPARTMENT OF TRANSPORTATION REPRESENTATIVE AUTHORIZED TO APPROVE THIS USE. ANYONE MAKING UNAUTHORIZED USE OF THIS DRAWING MAY BE PROSECUTED TO THE FULLEST EXTENT OF THE LAW.

REVISIONS
1. Revised Fence height and deleted (Type A) from the Silt Fence description on 07-12-07 by R.R.A.
2. Revised Notes 2, 3, 4, 6 and added 8 on 08-24-11 by J.F.T.
3. Updated Special Drawing No. from ESC-200 (SHEET 4 of 5) to ESC-200-4 on 10-31-16 by J.F.T. AND J.M.M.

ALABAMA DEPARTMENT OF TRANSPORTATION
1409 COLISEUM BOULEVARD
MONTGOMERY, AL 36130-3050

DESIGN BUREAU SPECIAL DRAWING

DETAILS OF SILT FENCE INSTALLATION

Bureau Std Engr. LVS
DRAWN BY: ____ DATE DRAWN: 2006

SPECIAL DRAWING NO: ESC-200-4
INDEX NO: 1161-C

NOT TO SCALE

REVISION

McCrory Williams
INCORPORATED
Engineers Surveyors

3207 INTERNATIONAL DR., SUITE G
MOBILE, ALABAMA
36606
PHONE: (251) 476-4720
FAX: (251) 476-4721
EMAIL: mail@mcwinc.com

M5712-2650
####

ESLAVA CREEK FORCE MAIN REPLACEMENT

EROSION CONTROL DETAILS

BOARD OF WATER AND SEWER COMMISSIONERS OF THE CITY OF MOBILE

SCALE: NOT TO SCALE	DATE: 2019	DRAWN BY: AKE	APPROVED BY: WEW	SHEET 13 OF 19

pw:M5712\2650_Eslava Creek FM Replacement\Engineering\Details\Erosion Control.13.1341.dgn

REFERENCE PROJECT NO	FISCAL YEAR	SHEET NO

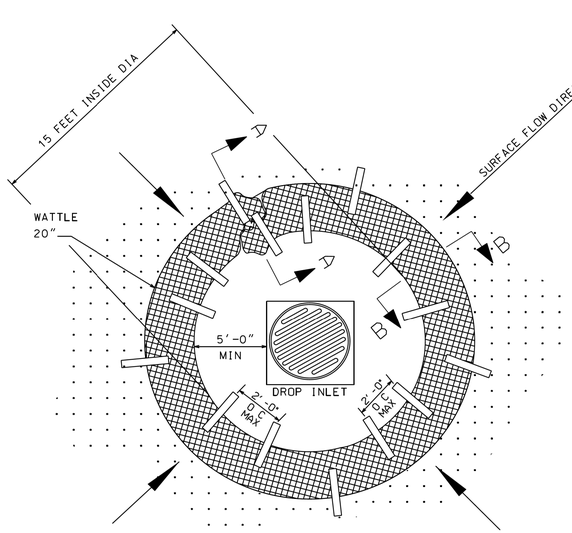

PLAN VIEW

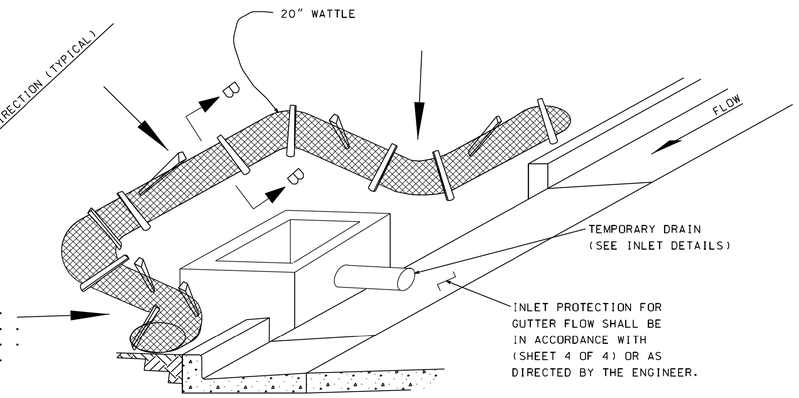

CURB INLET PROTECTION (STAGE 2)

SINGLE OR DOUBLE WING INLET

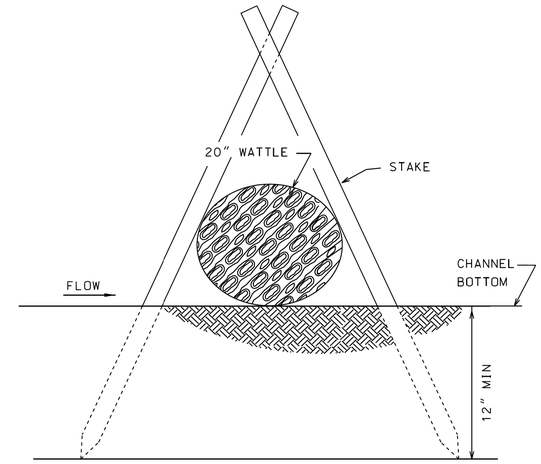

SECTION B-B

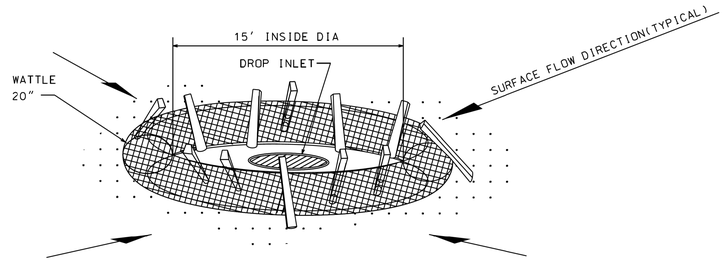

DROP INLET PROTECTION

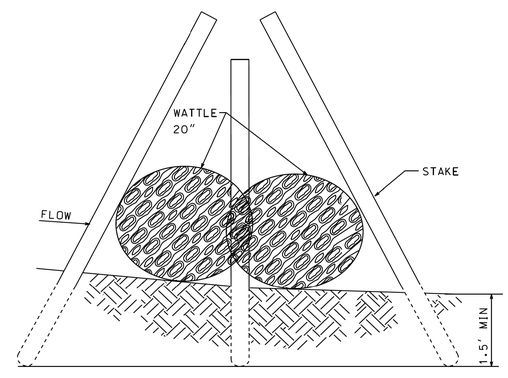

SECTION A-A

NOTES:

1. ANCHORING STAKES SHALL BE SIZED, SPACED, AND BE OF A MATERIAL THAT EFFECTIVELY SECURES THE WATTLE. STAKE SPACING SHALL BE A MAXIMUM OF TWO FEET.
2. OVERLAP ENDS OF WATTLES PER MANUFACTURERS RECOMMENDATIONS (1'MIN.3'MAX).
3. SEE ALDOT LIST 11-24 FOR APPROVED WATTLES.
4. SILT FENCE OR SAND BAGS MAY ALSO BE USED FOR THIS APPLICATION. HAY BALES NOT ACCEPTABLE DURING THIS STAGE.

--SPECIFICATIONS--
CURRENT ALABAMA DEPARTMENT OF TRANSPORTATION

THIS DRAWING REPRESENTS DESIGNS PREPARED FOR USE BY THE ALABAMA DEPARTMENT OF TRANSPORTATION AND IS NOT TO BE COPIED, REPRODUCED, ALTERED, OR USED BY ANYONE, OR ANY ORGANIZATION, WITHOUT THE EXPRESSED WRITTEN CONSENT OF THE ALABAMA DEPARTMENT OF TRANSPORTATION REPRESENTATIVE AUTHORIZED TO APPROVE THIS USE. ANYONE MAKING UNAUTHORIZED USE OF THIS DRAWING MAY BE PROSECUTED TO THE FULLEST EXTENT OF THE LAW.

REVISIONS

1. Revised note on "CURB INLET PROTECTION (STAGE 2)" from "5 OF 5" to "4 OF 4" and added "REQUIRED TRENCHING" on SECTION A-A and "SECTION B-B" on 06-24-11 by JJ.T.
2. Revised and updated "CURB INLET PROTECTION (STAGE 2)", "DROP INLET PROTECTION", "SECTION A-A" and "SECTION B-B" to show new staking w/o trenching on 09-24-12 by JJ.T.
3. Deleted a "NOTE" and replaced and revised Note 4, Revised and updated "PLAN VIEW" on 07-11-13 by JJ.T.
4. Updated Special Drawing No. from ESC-400 (SHEET 3 OF 5) to ESC-400-3 on 10-31-16 by JJ.T. & JJM.

ALABAMA DEPARTMENT OF TRANSPORTATION
1409 COLISEUM BOULEVARD
MONTGOMERY, AL 36130-3050

DESIGN BUREAU SPECIAL DRAWING

INLET PROTECTION DETAILS OF WATTLES

Bureau Std Engr._____
DRAWN BY:_____ DATE DRAWN: 2006

SPECIAL DRAWING NO: ESC-400-3

INDEX NO: 1163-B

NOT TO SCALE

REVISION

McCrory Williams
INCORPORATED
Engineers Surveyors

3207 INTERNATIONAL DR., SUITE G
MOBILE, ALABAMA
36606
PHONE: (251) 476-4720
FAX: (251) 476-4721
EMAIL: mail@mcwinc.com

M5712-2650 ####

ESLAVA CREEK FORCE MAIN REPLACEMENT

EROSION CONTROL DETAILS

BOARD OF WATER AND SEWER COMMISSIONERS OF THE CITY OF MOBILE

SCALE: NOT TO SCALE	DATE: 2019	DRAWN BY: AKE	APPROVED BY: WEW	SHEET 13A OF 19

GeMS\M2650 Abn Eslava Creek FM Parallel Lines\Objects\MPs\NS@Mosaic III\MPetalis-Erosion Control(13-34).dgn

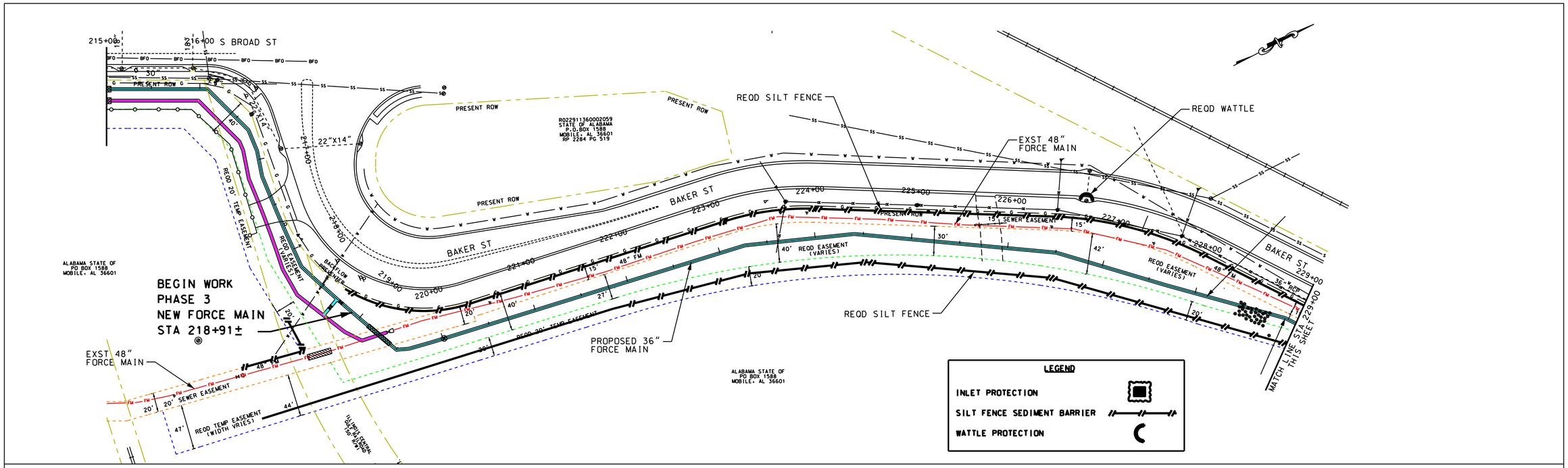

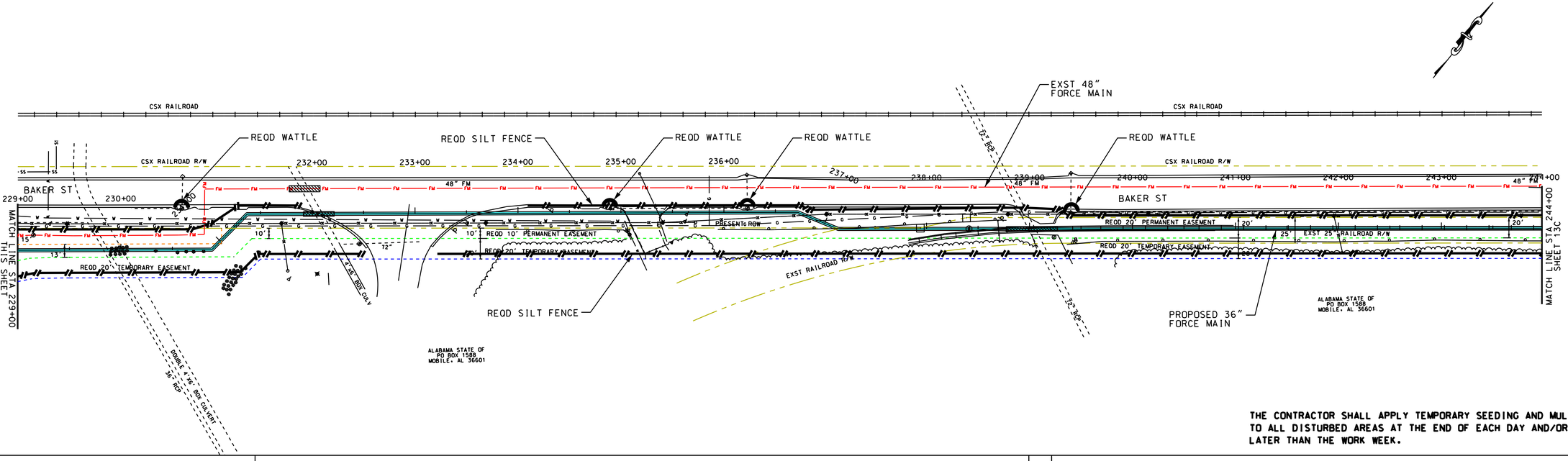

THE CONTRACTOR SHALL APPLY TEMPORARY SEEDING AND MULCHING TO ALL DISTURBED AREAS AT THE END OF EACH DAY AND/OR NO LATER THAN THE WORK WEEK.

REVISION

McCrory Williams
INCORPORATED
Engineers Surveyors

3207 INTERNATIONAL DR., SUITE G
MOBILE, ALABAMA
36606
PHONE: (251) 476-4720
FAX: (251) 476-4721
EMAIL: mail@mcwinc.com

M5712-2650
####

ESLAVA CREEK FORCE MAIN REPLACEMENT

EROSION CONTROL PLAN STA 219+00 TO STA 244+00

BOARD OF WATER AND SEWER COMMISSIONERS OF THE CITY OF MOBILE

SCALE: 1" = 50' HORZ 1" = 10' VERT	DATE: 2019	DRAWN BY: AKE	APPROVED BY: WEW	SHEET 13B OF 19

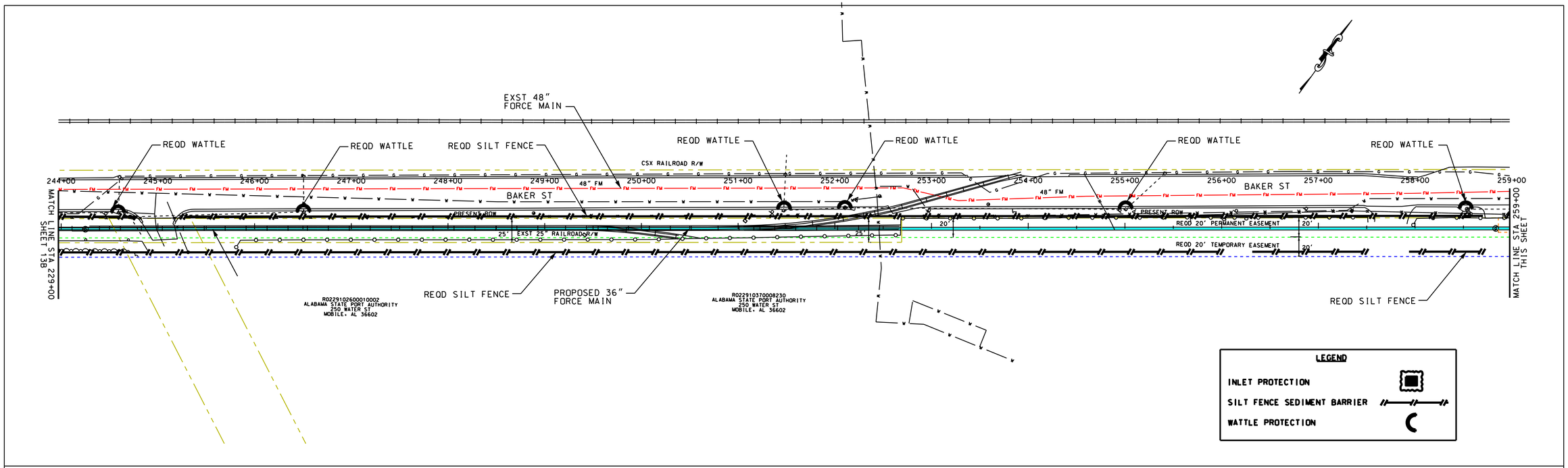

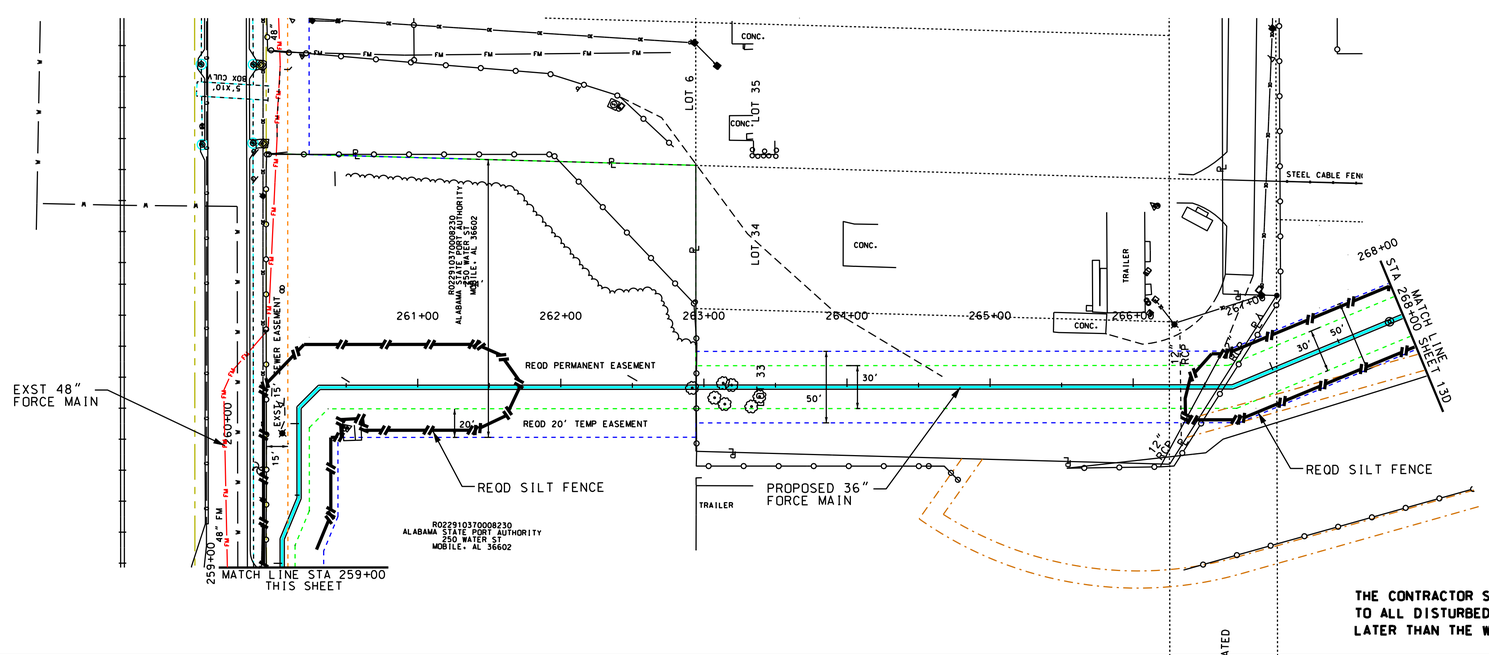

THE CONTRACTOR SHALL APPLY TEMPORARY SEEDING AND MULCHING TO ALL DISTURBED AREAS AT THE END OF EACH DAY AND/OR NO LATER THAN THE WORK WEEK.

REVISION

McCrory Williams
INCORPORATED
Engineers Surveyors

3207 INTERNATIONAL DR., SUITE G
MOBILE, ALABAMA
36606
PHONE: (251) 476-4720
FAX: (251) 476-4721
EMAIL: mail@mcwinc.com

M5712-2650
####

ESLAVA CREEK FORCE MAIN REPLACEMENT

EROSION CONTROL PLAN STA 244+00 TO STA 268+00

BOARD OF WATER AND SEWER COMMISSIONERS OF THE CITY OF MOBILE

SCALE: 1" = 50' HORZ 1" = 10' VERT	DATE: 2019	DRAWN BY: AKE	APPROVED BY: WEW	SHEET 13C OF 19

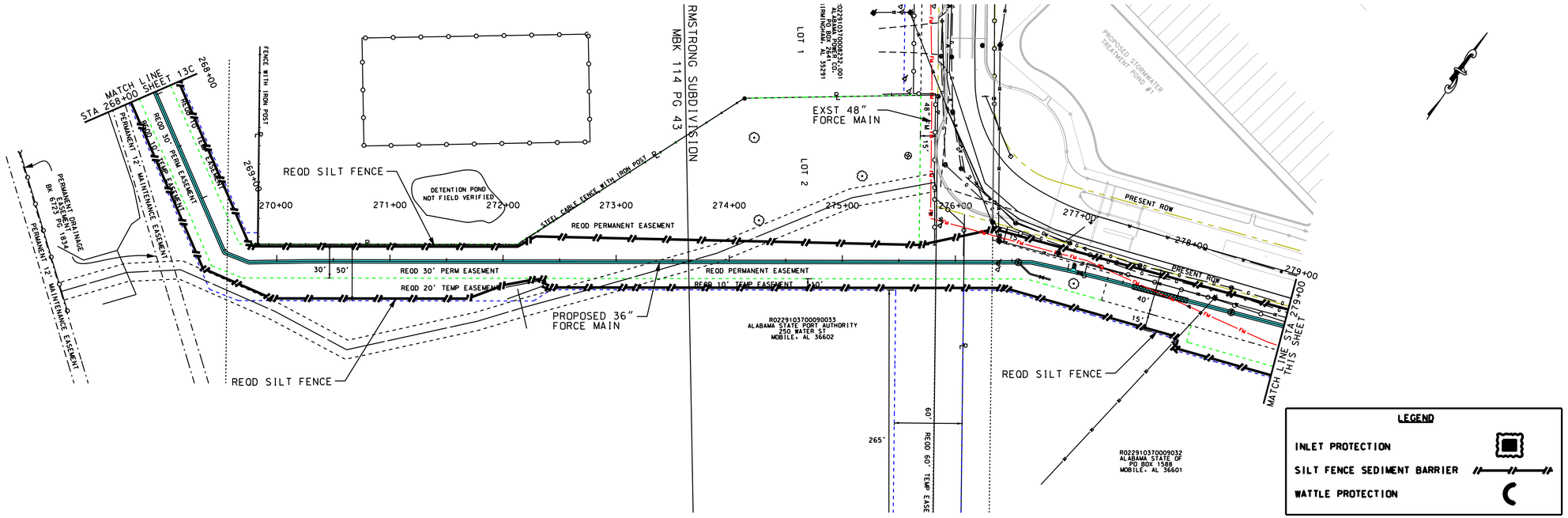

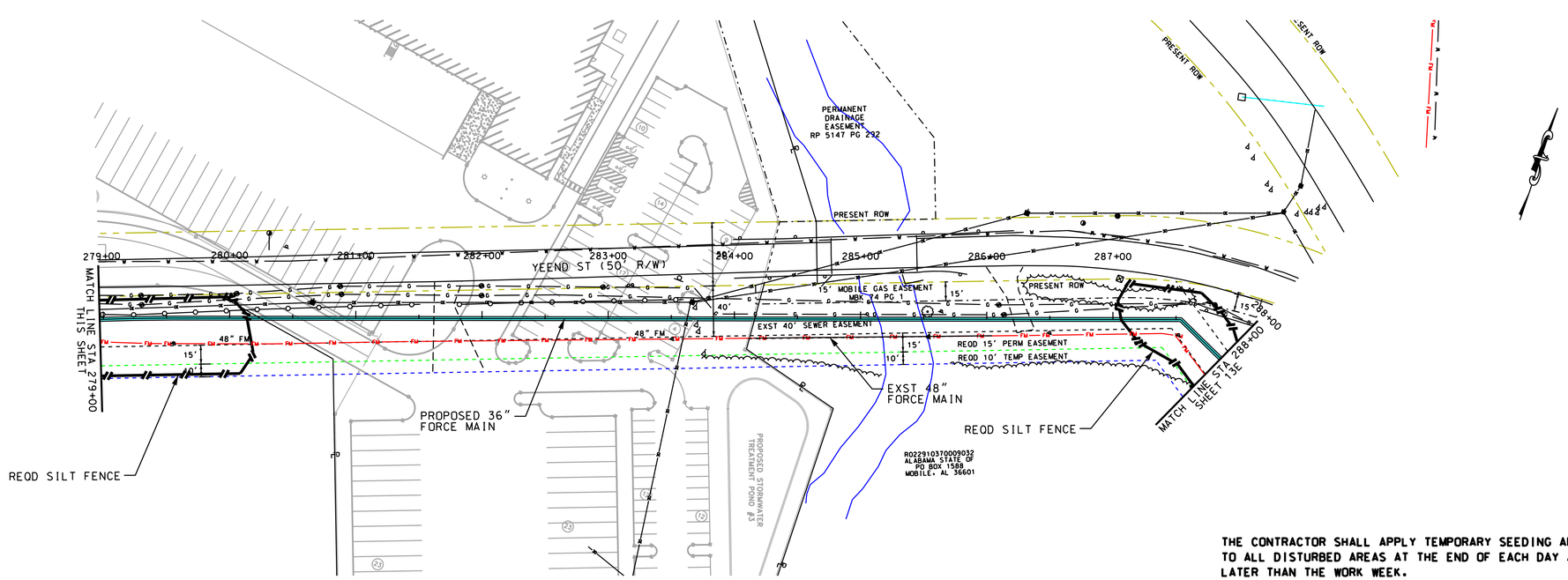

THE CONTRACTOR SHALL APPLY TEMPORARY SEEDING AND MULCHING TO ALL DISTURBED AREAS AT THE END OF EACH DAY AND/OR NO LATER THAN THE WORK WEEK.

REVISION

McCrory Williams
INCORPORATED
Engineers Surveyors

3207 INTERNATIONAL DR., SUITE G
MOBILE, ALABAMA
36606
PHONE: (251) 476-4720
FAX: (251) 476-4721
EMAIL: mail@mcwinc.com

M5712-2650
####

ESLAVA CREEK FORCE MAIN REPLACEMENT

EROSION CONTROL PLAN STA 268+00 TO STA 288+00

BOARD OF WATER AND SEWER COMMISSIONERS OF THE CITY OF MOBILE

SCALE: 1" = 50' HORZ 1" = 10' VERT	DATE: 2019	DRAWN BY: AKE	APPROVED BY: WEW	SHEET 13D OF 19

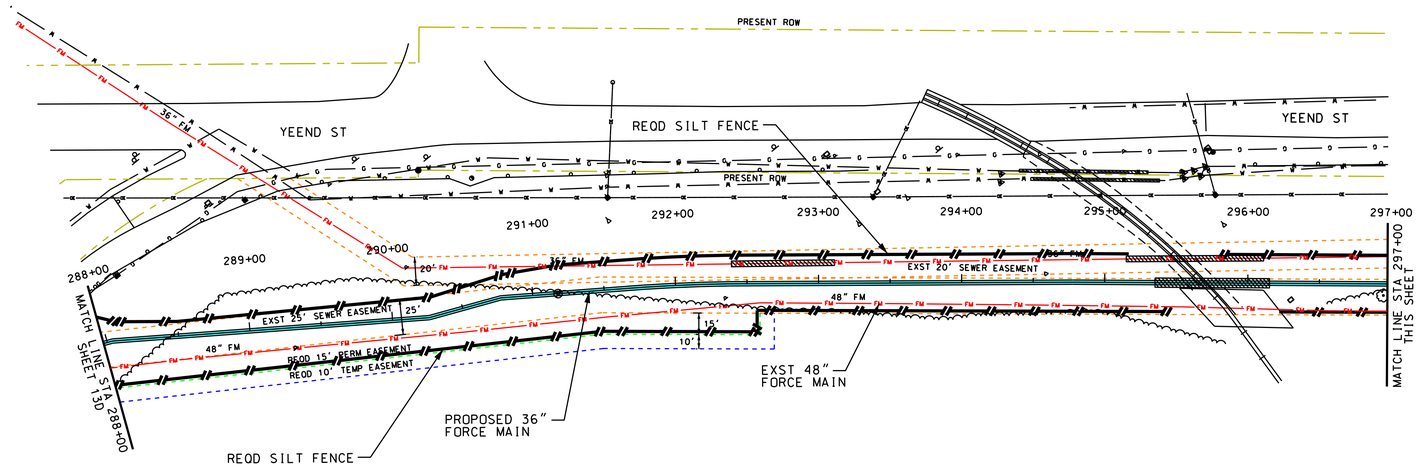

LEGEND

INLET PROTECTION

SILT FENCE SEDIMENT BARRIER

WATTLE PROTECTION

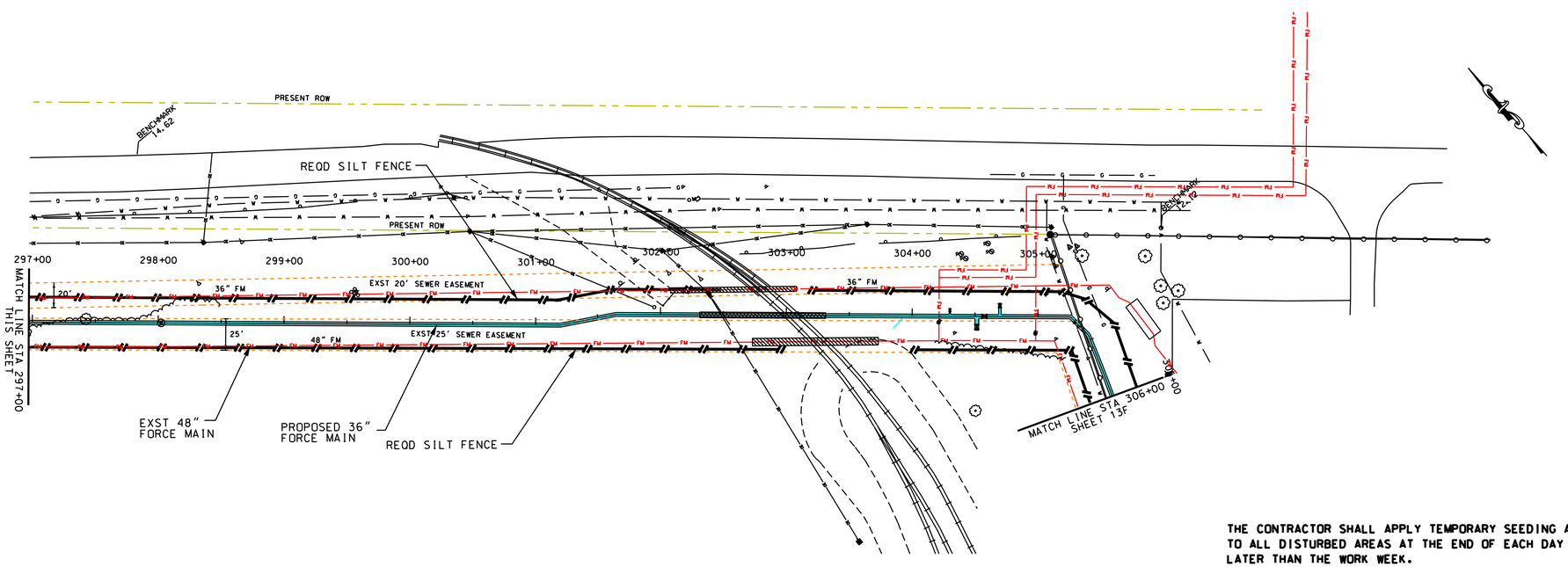

THE CONTRACTOR SHALL APPLY TEMPORARY SEEDING AND MULCHING TO ALL DISTURBED AREAS AT THE END OF EACH DAY AND/OR NO LATER THAN THE WORK WEEK.

REVISION

McCrory Williams
INCORPORATED
Engineers Surveyors

3207 INTERNATIONAL DR., SUITE G
MOBILE, ALABAMA
36606
PHONE: (251) 476-4720
FAX: (251) 476-4721
EMAIL: mail@mcwinc.com

M5712-2650
####

ESLAVA CREEK FORCE MAIN REPLACEMENT

EROSION CONTROL PLAN STA 288+00 TO STA 306+00

BOARD OF WATER AND SEWER COMMISSIONERS OF THE CITY OF MOBILE

SCALE: 1" = 50' HORZ 1" = 10' VERT	DATE: 2019	DRAWN BY: AKE	APPROVED BY: WEW	SHEET 13E OF 19

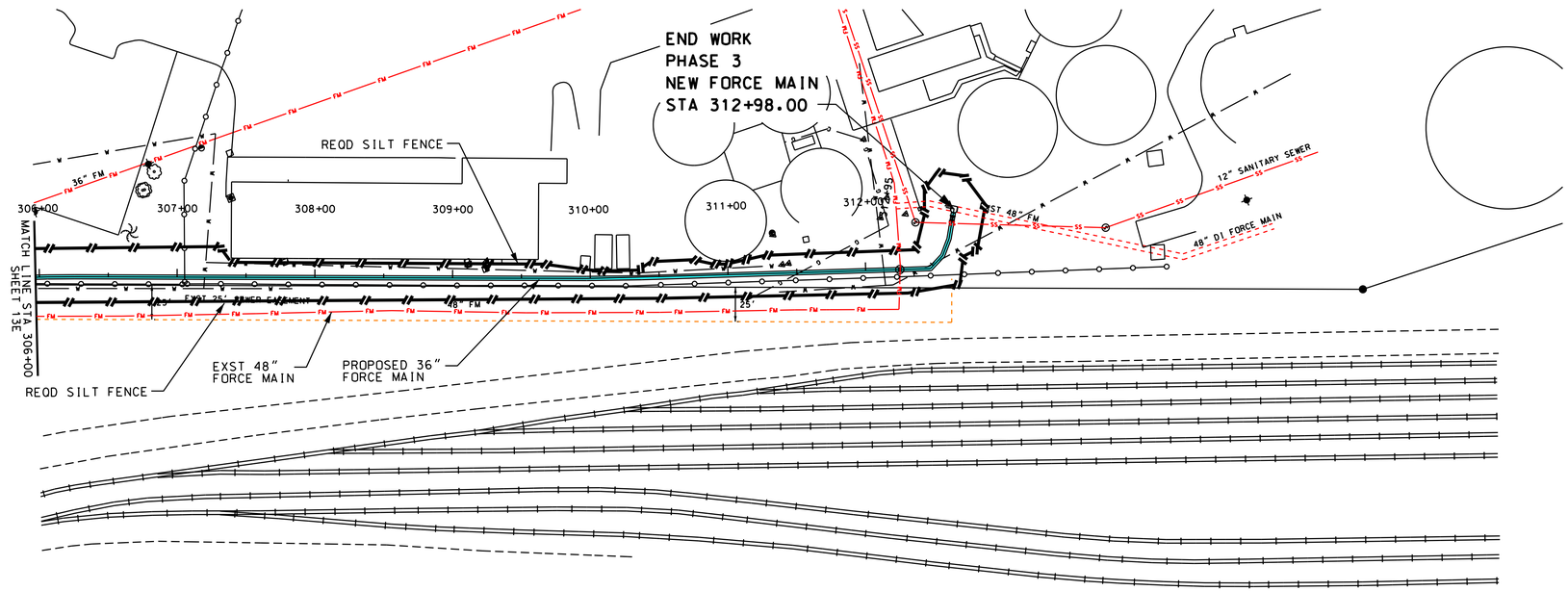

LEGEND

INLET PROTECTION

SILT FENCE SEDIMENT BARRIER

WATTLE PROTECTION

THE CONTRACTOR SHALL APPLY TEMPORARY SEEDING AND MULCHING TO ALL DISTURBED AREAS AT THE END OF EACH DAY AND/OR NO LATER THAN THE WORK WEEK.

REVISION

McCrory Williams
INCORPORATED
Engineers Surveyors

3207 INTERNATIONAL DR., SUITE G
MOBILE, ALABAMA
36606
PHONE: (251) 476-4720
FAX: (251) 476-4721
EMAIL: mail@mcwinc.com

M5712-2650
####

ESLAVA CREEK FORCE MAIN REPLACEMENT

EROSION CONTROL PLAN 306+00 TO STA 313+00

BOARD OF WATER AND SEWER COMMISSIONERS OF THE CITY OF MOBILE

SCALE: 1" = 50' HORZ 1" = 10' VERT	DATE: 2019	DRAWN BY: AKE	APPROVED BY: WEW	SHEET 13F OF 19

WARNING SIGN PLACEMENT

Road Type	Distance Between Signs		
	A	B	C
Urban (Low Speed)	200	200	200

NOTE: CONES SHOULD BE PLACED
NO FURTHER THAN
10 FEET APART

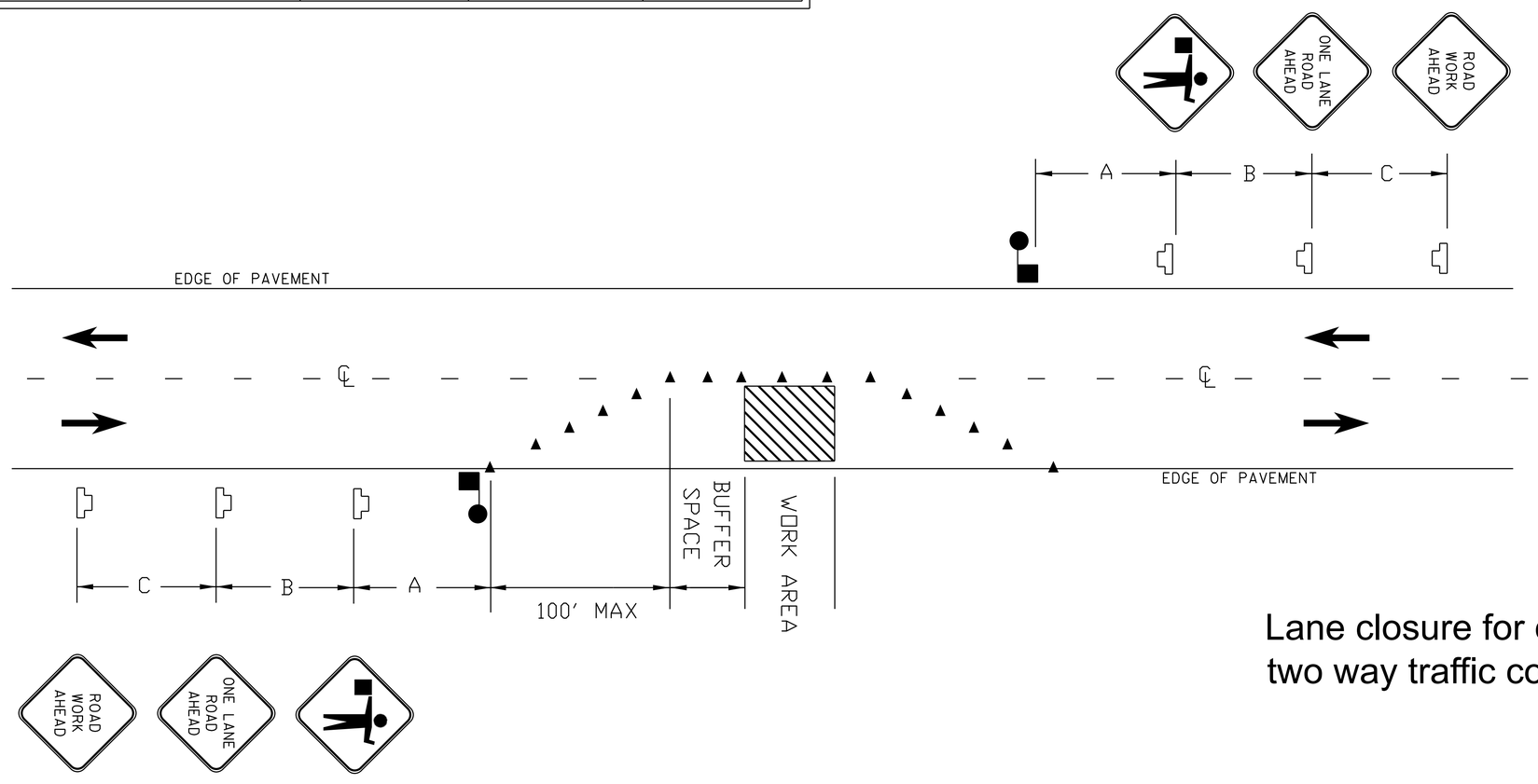

Lane closure for one lane-
two way traffic control.

TAPER LENGTH

Speed Limit	Taper Length
< 25 mph	100 ft
25 mph	125 ft
30 mph	180 ft
35 mph	245 ft

LEGEND

- TEMPORARY MOUNTED SIGN
- CONES
- FLAGGER
- WORK AREA

LENGTH OF BUFFER SPACE

Speed Limit (mph)	Length (ft)
25	55

REVISION

McCrory Williams
INCORPORATED
Engineers Surveyors

3207 INTERNATIONAL DR., SUITE G
MOBILE, ALABAMA
36606
PHONE: (251) 476-4720
FAX: (251) 476-4721
EMAIL: mail@mcwinc.com

M5712-2650
####

ESLAVA CREEK FORCE MAIN REPLACEMENT

MISCELLANEOUS DETAILS

BOARD OF WATER AND SEWER COMMISSIONERS OF THE CITY OF MOBILE

SCALE: NOT TO SCALE	DATE: 2019	DRAWN BY: AKE	APPROVED BY: WEW	SHEET 14 OF 19

CONSTRUCTION DETAIL

TYPICAL THRUST BLOCKS MINIMUM THRUST BLOCK AREA SQ. FT. L (FT.) X H (FT.)			
INSIDE DIA. PIPE LINE IN INCHES	90° BENDS	TEES, DEAD ENDS, OR 45° BENDS	22 1/2° BENDS
6"	3.0	2.2	1.0
8"	5.5	4.0	1.5
10"	8.5	6.0	2.5
12"	12.0	9.0	3.5
16"	22.0	16.0	6.0
18"	27.0	20.0	8.0
20"	34.0	24.0	10.0
24"	48.0	34.0	14.0
30"	75.0	53.0	21.0

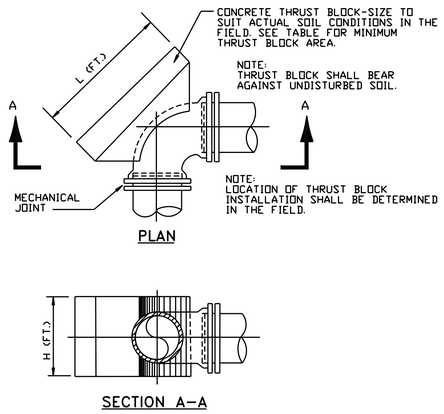

TYPICAL THRUST BLOCK DETAIL FOR BENDS

N.T.S.

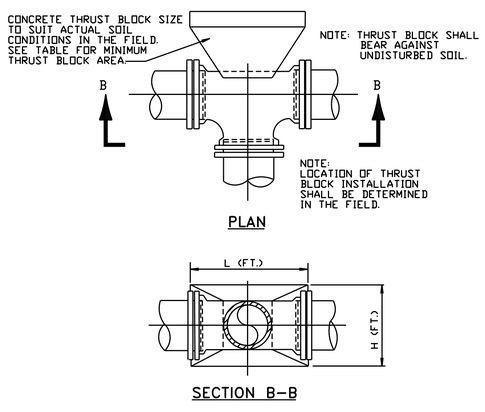

TYPICAL THRUST BLOCK DETAIL FOR TEES

N.T.S.

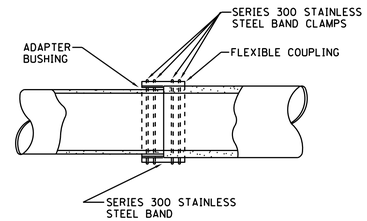

JOINT DETAIL FOR COUPLING OF PIPES OF DISSIMILAR O.D. UP TO 12"

N.T.S.

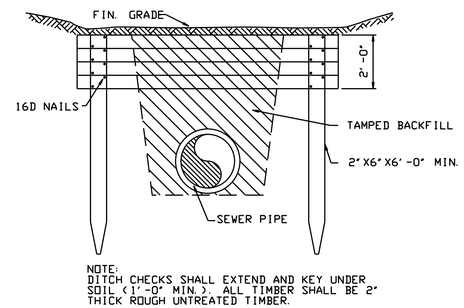

TYPICAL TIMBER DITCH CHECK

N.T.S.

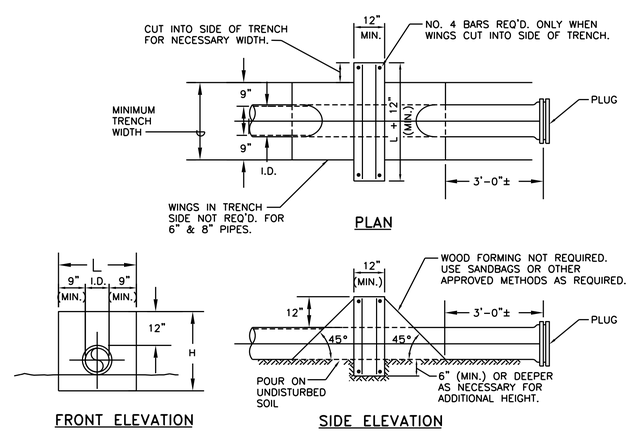

CONCRETE DEAD END ANCHOR BLOCK DETAILS

N.T.S.

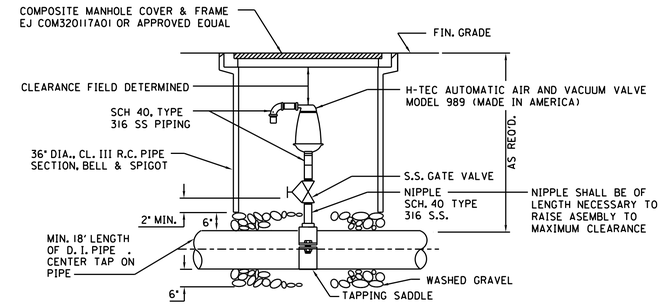

AIR AND VACUUM VALVE ASSEMBLY

N.T.S.

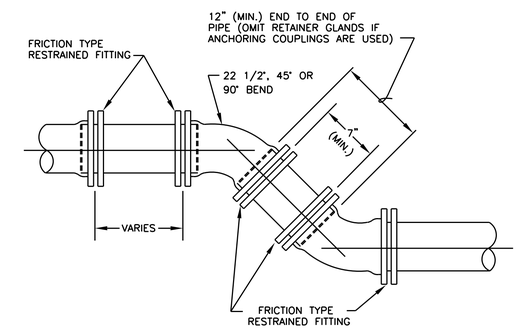

ANCHORING OF VERTICAL OR HORIZONTAL BENDS WHERE THRUST BLOCKS ARE NOT DESIRED

N.T.S.

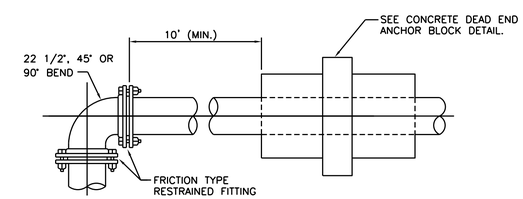

ANCHORAGE OF BENDS WHERE THRUST BLOCKS ARE NOT DESIRED – DEAD END ANCHORS

N.T.S.

REVISION

McCrory Williams
INCORPORATED
Engineers Surveyors
3207 INTERNATIONAL DR., SUITE G
MOBILE, ALABAMA
36606
PHONE: (251) 476-4720
FAX: (251) 476-4721
EMAIL: mail@mcwinc.com

M5712-2650
####

ESLAVA CREEK FORCE MAIN REPLACEMENT

MISCELLANEOUS DETAILS

BOARD OF WATER AND SEWER COMMISSIONERS OF THE CITY OF MOBILE

SCALE: NOT TO SCALE	DATE: 2019	DRAWN BY: AKE	APPROVED BY: WEW	SHEET 15 OF 19

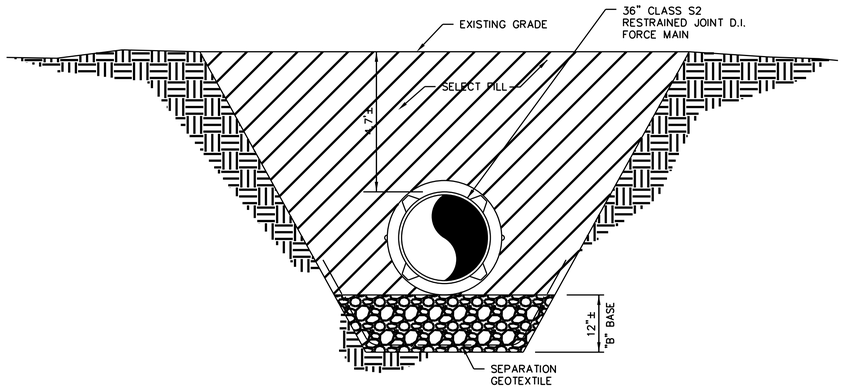

DETAIL OF ENCASEMENT PIPE FOUNDATION ON 36" FORCEMAIN

N.T.S.

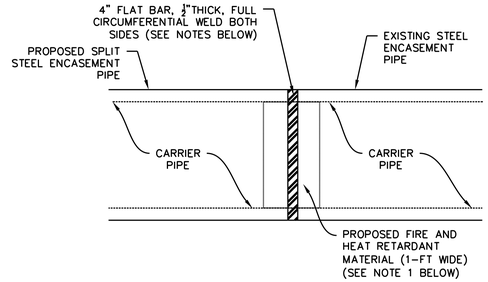

NOTE:
WELDING ENCASEMENT PIPE ENDS TOGETHER

1. PRIOR TO WELDING THE ENCASEMENT PIPE ENDS TOGETHER, THE CONTRACTOR SHALL PREVENT THE CARRIER PIPE FROM EXPOSURE TO HEAT BY WRAPPING THE CARRIER PIPE WITH FIRE AND HEAT RETARDANT MATERIAL (1-FT WIDE) (AS APPROVED BY THE ENGINEER) CENTERED ON ENDS.
2. CONTRACTOR SHALL ALIGN THE ENDS OF THE PROPOSED AND EXISTING ENCASEMENT PIPES TOGETHER.
3. CONTRACTOR SHALL SECURE THE ENCASEMENT PIPE ENDS TOGETHER BY WELDING 4" FLAT BAR, ½" THICK, (FULL CIRCUMFERENTIAL, BOTH SIDES).

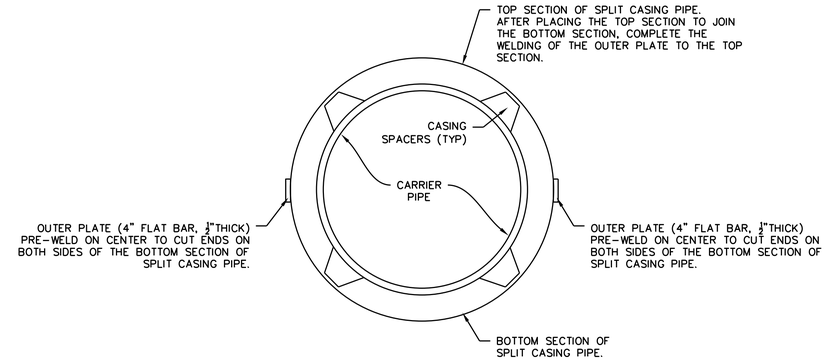

SPLIT CASING
OUTER PLATE PRE-WELDED TO ONE SECTION OF ENCASEMENT PIPE. WITH BOTH TOP AND BOTTOM SECTIONS IN PLACE, COMPLETE THE WELDING OF THE OUTER PLATE TO THE UNWELDED SECTION. THIS METHOD OF CONNECTION IS PROPOSED IN ORDER TO PREVENT EXCESS HEAT ON EXISTING 36" PIPE.

SPLIT ENCASEMENT DETAIL

N.T.S.

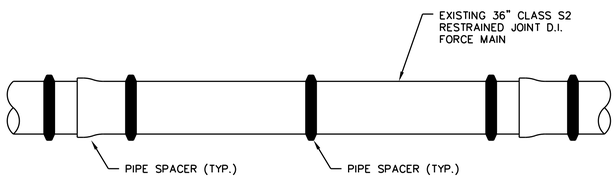

PIPE SPACER DETAIL

N.T.S.

SPLIT ENCASEMENT INSTALLMENT PROCEDURE:

1. LOCATE PIPE BELLS, EXCAVATE BELL SIDE OF PIPE, AND SUPPORT (PRIOR TO EXCAVATING THE REST OF PIPE) WITH ANY MEANS NECESSARY TO PREVENT SAGGING.
2. ONCE BELL ARE SUPPORTED, EXCAVATE PIPE AS NEEDED TO INSTALL BOTTOM HALF OF SPLIT ENCASEMENT.
3. INSTALL ENCASEMENT SPACERS 2' FROM BELL AND SPIGOT END, TWO ADDITIONAL SPACERS EQUALLY SPACED BETWEEN THESE SPACERS.
4. USING "STEEL LIFTING CLAMPS" OR LIFT HOOKS, LOWER BOTTOM HALF OF 48" SPLIT STEEL ENCASEMENT PIPE INTO HOLE. CAREFULLY PULL ENCASEMENT FROM OPPOSITE SIDE TO POSITION DIRECTLY UNDER 36" DUCTILE IRON FORCE MAIN.
5. LIFT 48" ENCASEMENT FROM POTH SIDES USING A MINIMUM OF TWO LIFTING POINTS ON EACH SIDE, SUPPORT ENCASEMENT WHEN ALL SPACER FEET ARE IN FULL CONTACT WITH ENCASEMENT.
6. PLACE SEPARATION GEOTEXTILE IN TRENCH AND STABILIZE IN PLACE TO A POINT 12" ABOVE ENCASEMENT INVERT.
7. FILL VOID BELOW PIPE WITH "B" BASE, COMPACTING IN 8" MINIMUM LIFTS USING HAND TAMP WHERE ACCESSIBLE.
8. CONTINUE THE ABOVE PROCEDURE UNTIL BOTTOM HALF OF SPLIT ENCASEMENT IS INSTALLED; AS ADDITIONAL ENCASEMENT IS INSTALLED, THEY SHOULD BE ALIGNED AND WELDED TOGETHER.
9. LIFT AND PLACE TOP HALF OF 48" ENCASEMENT PIPE ON CORRESPONDING BOTTOM HALF AND TACK WELD IN PLACE. COMPLETE THIS PROCESS FOR ENTIRE ENCASEMENT PIPE PRIOR TO COMPLETING THE WELD.
10. ONCE ENCASEMENT IS COMPLETE, END SEALS SHOULD BE USED TO PREVENT SOIL INTRUSION, AND SELECT FILL SHOULD BE PLACED AND COMPACTED TO MATCH EXISTING GRADE.

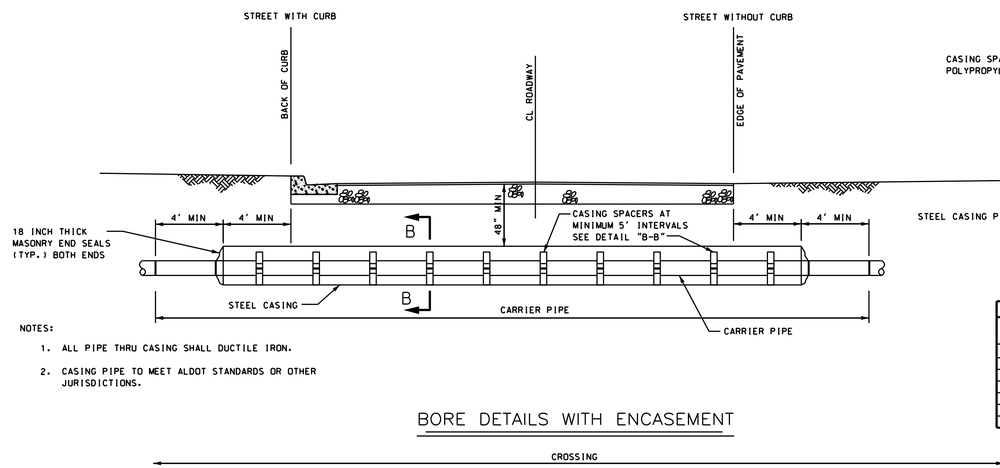

NOTES:

1. ALL PIPE THRU CASING SHALL DUCTILE IRON.
2. CASING PIPE TO MEET ALDOT STANDARDS OR OTHER JURISDICTIONS.

BORE DETAILS WITH ENCASEMENT

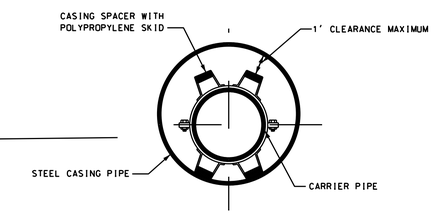

SECTION "B-B"

CASING PIPE		
CARRIER PIPE NOMINAL DIA	MIN. OD	MIN WALL THICK
36"	48"	0.500"
42"	54"	0.500"
48"	60"	0.500"

REVISION

McCrory Williams
INCORPORATED
Engineers Surveyors

3207 INTERNATIONAL DR., SUITE G
MOBILE, ALABAMA
36606
PHONE: (251) 476-4720
FAX: (251) 476-4721
EMAIL: mail@mcwinc.com

M5712-2650
####

ESLAVA CREEK FORCE MAIN REPLACEMENT

MISCELLANEOUS DETAILS

BOARD OF WATER AND SEWER COMMISSIONERS OF THE CITY OF MOBILE

SCALE: NOT TO SCALE	DATE: 2019	DRAWN BY: AKE	APPROVED BY: WEW	SHEET 15A OF 19

G:\M5712\2650_Rdn_Eslava_Creek_FM_Replace\Lines\CADD\UtilPl\UtilPlans\Phase_3\Details-Sewer_15_15U.dgn

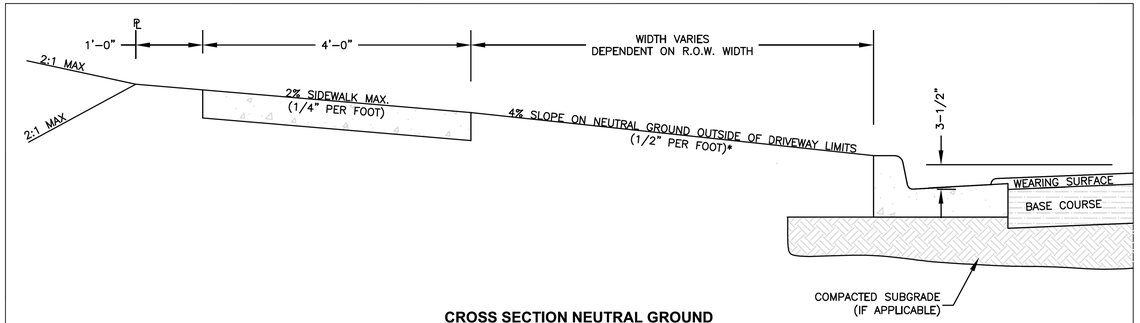

CROSS SECTION NEUTRAL GROUND
NOT TO SCALE

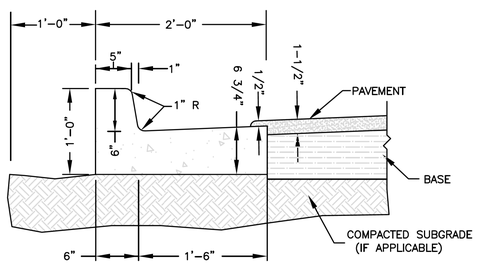

CURB & GUTTER DETAIL
NOT TO SCALE

NOTES:
SIDEWALK PANELS THAT ABUT THE DRIVEWAY TO BE 5" MINIMUM THICKNESS.

OTHER SIDEWALK PANELS TO BE 4" MIN. THICKNESS.

ALL CONCRETE TO BE 3000 P.S.I. MIX WITH NATURAL COLOR AND BROOM FINISH.

IF SITE CONDITIONS PROHIBIT THE USE OF THESE STANDARDS, AN ALTERNATIVE MAY BE SUBMITTED FOR APPROVAL TO THE ENGINEERING DEPT.

CITY OF MOBILE, ALABAMA
ENGINEERING DEPARTMENT
NEUTRAL GROUND, C & G, SIDEWALK DETAILS FOR ASPHALT ROADWAY W/ C & G

STANDARD DRAWING 4	SHEET 1 OF 1	05-05-15

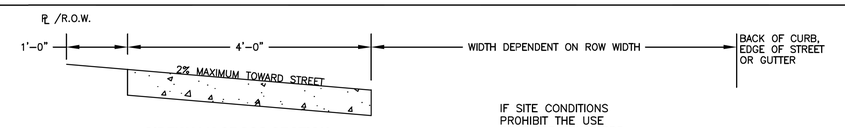

SIDEWALK CROSS SECTION
NOT TO SCALE

IF SITE CONDITIONS PROHIBIT THE USE OF THESE STANDARDS, AN ALTERNATIVE MAY BE SUBMITTED FOR APPROVAL TO THE ENGINEERING DEPT.

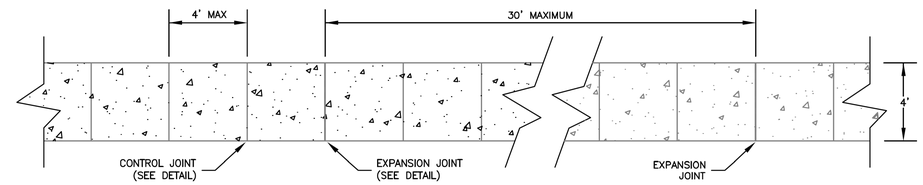

STANDARD SIDEWALK PLAN DETAIL
NOT TO SCALE

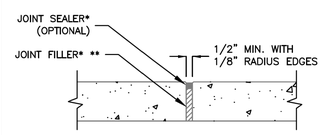

EXPANSION JOINT DETAIL
NOT TO SCALE

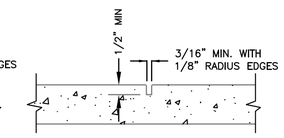

CONTROL JOINT DETAIL
NOT TO SCALE

** JOINT FILLER TO BE CUT FLUSH WITH SIDEWALK SURFACE WHEN NO JOINT SEALER IS USED

*EXPANSION JOINT MATERIALS TO MEET ALDOT SPECIFICATIONS 832.01 & 832.02

NOTES:

SIDEWALK PANELS TO BE 4" MINIMUM THICKNESS.

SIDEWALK PANELS THAT ABUT A DRIVEWAY OR WILL OTHERWISE BE SUBJECTED TO VEHICULAR TRAFFIC TO BE 5" MINIMUM THICKNESS.

ALL CONCRETE TO BE 3000 P.S.I. MIX WITH NATURAL COLOR AND BROOM FINISH.

EDGE OF SIDEWALK SHALL HAVE 1/2" RADIUS.

CITY OF MOBILE, ALABAMA
ENGINEERING DEPARTMENT
CONCRETE SIDEWALK DETAILS

STANDARD DRAWING 12	SHEET 1 OF 1	09-23-2011

REVISION

McCrory Williams
INCORPORATED
Engineers Surveyors

3207 INTERNATIONAL DR., SUITE G
MOBILE, ALABAMA
36606
PHONE: (251) 476-4720
FAX: (251) 476-4721
EMAIL: mail@mcwinc.com

M5712-2650
####

ESLAVA CREEK FORCE MAIN REPLACEMENT

MISCELLANEOUS DETAILS

BOARD OF WATER AND SEWER COMMISSIONERS OF THE CITY OF MOBILE

SCALE: NOT TO SCALE	DATE: 2019	DRAWN BY: AKE	APPROVED BY: WEW	SHEET 15B OF 19

pw:\\MCW2\M2650_Mtn Eslava Creek FM Parallel Line\Docs\Utility\Misc Details\Sewer Details.dwg

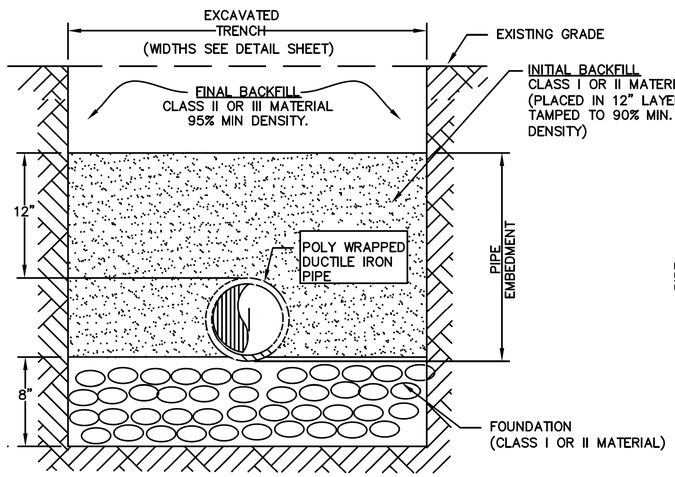

EMBEDMENT DETAIL FOR A D.I. GRAVITY SEWER PIPE *

N.T.S.

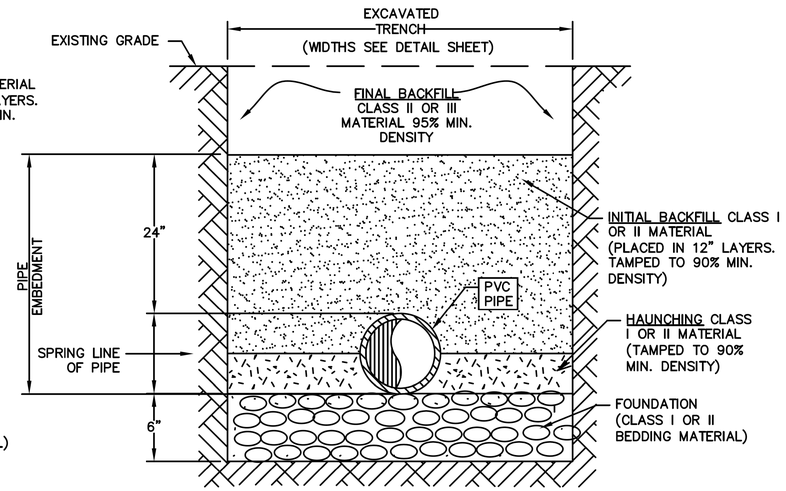

EMBEDMENT DETAIL FOR PVC SEWER PIPE *

N.T.S.

* UNLESS OTHERWISE SPECIFIED BY GEOTECHNICAL REPORT

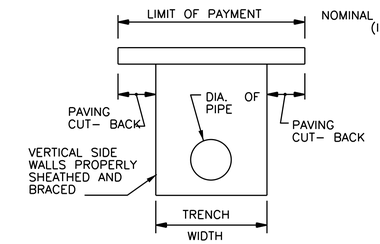

NOMINAL PIPE DIAMETER (INCHES)	TRENCH WIDTH (INCHES)
4	40
6	42
8	44
10	46
12	48
14	50
15	51
16	52
18	54
20	56
24	60
30	66
36	72
42	78
48	84

TRENCH WIDTHS & PAVING CUT- BACKS LIMIT OF PAYMENT

NOTES:

1. THE LIMITS OF PAYMENT FOR PAVING OVER THE TRENCH SHALL BE THE TRENCH WIDTH SHOWN PLUS THE CUT- BACK ON EITHER SIDE OF THE TRENCH.
2. REPLACEMENT WORK BEYOND TRENCH WIDTH OR LIMITS OF PAYMENT FOR PAVING SHALL BE AT THE CONTRACTOR'S EXPENSE. NO EXTRA COMPENSATION WILL BE ALLOWED.
3. THE LIMITS OF PAYMENT FOR SELECT BACKFILL (ITEM BF- 1) SHALL BE THE APPLICABLE TRENCH WIDTH SHOWN MULTIPLIED BY THE AVERAGE DEPTH OF BACKFILL TO THE TOP OF PIPE.
4. THE JAGGED EDGES OF THE EXISTING PAVEMENT ALONG THE TRENCH CUT SHALL BE SQUARED AND CUT TO A NEAT LINE WITH AN APPROPRIATE SAW ALONG STRAIGHT LINES PARALLEL TO THE CENTER OF THE PAVEMENT CUT.

GENERAL NOTES FOR COMPACTION

1. WHEN USING MECHANICAL COMPACTORS, AVOID CONTACT WITH PIPE. USE SMALL MECHANICAL COMPACTORS WHEN COMPACTING OVER PIPE CROWN AND MAINTAIN 6" MINIMUM COVER ABOVE PIPE. COMPACTION WITH BACK-HOE BUCKET, OR OTHER EQUIPMENT NOT INTENDED FOR COMPACTION USE, IS NOT ALLOWED.
2. MATERIAL SHALL BE INSTALLED AND COMPACTED IN 12" MAXIMUM LAYERS.
3. FINAL GRADE OF BEDDING SHALL BE LEVELED BY HAND.
4. HAUNCHING SHALL BE WORKED IN AROUND PIPE BY HAND & EVENLY TAMPED TO PROVIDE UNIFORM SUPPORT.
5. EMBEDMENT COMPACTION SHALL BE ACHIEVED BY PLACING AND WORKING IN BY HAND TO INSURE ALL EXCAVATED VOIDS AND HAUNCH AREAS ARE FILLED. HAND TAMP WITH VIBRATORY PLATE COMPACTORS. TO MINIMIZE COMPACTION EFFORT OF CLASS III MATERIAL, MOISTURE CONTENT SHALL BE MAINTAINED NEAR OPTIMUM.
6. LOCALIZED LOADINGS/DIFFERENTIAL SETTLEMENT SHALL BE MINIMIZED AT PIPE CROSSINGS.
7. PLACEMENT OF EMBEDMENT MATERIALS SHALL BE BY METHODS THAT WILL NOT DISTURB OR DAMAGE THE PIPE.
8. WORK IN AND TAMP THE HAUNCHING MATERIAL IN THE AREA BETWEEN THE BEDDING AND UNDERSIDE OF THE PIPE BEFORE PLACING AND COMPACTING THE REMAINDER OF THE EMBEDMENT IN THE PIPE ZONE.
9. USE COMPACTION EQUIPMENT AND TECHNIQUES THAT ARE COMPATIBLE WITH MATERIALS USED AND LOCATION IN THE TRENCH. (SEE NOTE 12)
10. HEAVY COMPACTION EQUIPMENT SHALL NOT BE USED FOR COMPACTION PURPOSES WITHIN THE PIPE EMBEDMENT AND FOUNDATION PIPE ZONES .BEFORE USING HEAVY COMPACTION OR CONSTRUCTION EQUIPMENT DIRECTLY OVER THE PIPE, PLACE SUFFICIENT BACKFILL TO PREVENT DAMAGE, EXCESSIVE DEFLECTIONS, OR OTHER DISTURBANCE OF THE PIPE. SUFFICIENT BACKFILL SHALL BE AS DETERMINED BY THE ENGINEER.
11. THE MINIMUM DEPTH OF COVER TO BE ESTABLISHED BY THE ENGINEER. IN THE ABSENCE OF AN ENGINEER REVIEW, THE FOLLOWING "DEFAULT" COVER RECOMMENDATIONS SHALL BE USED. FOR CLASS I, EMBEDMENT MATERIALS INSTALLED TO THE MINIMUM REQUIRED DENSITIES SHALL PROVIDE COVER OF AT LEAST 24" OR ONE PIPE DIAMETER (WHICHEVER IS GREATER). FOR CLASS II AND III, EMBEDMENT MATERIALS INSTALLED TO THE MINIMUM REQUIRED DENSITIES SHALL PROVIDE COVER OF AT LEAST 36" OR ONE PIPE DIAMETER (WHICHEVER IS GREATER). AT LEAST 48" COVER IS REQUIRED BEFORE USING HEAVY COMPACTION EQUIPMENT.
12. COMPACTION METHODS:
    a. COARSE GRAINED, CLEAN MATERIALS, SUCH AS CRUSHED STONE, GRAVELS AND SAND, ARE MORE READILY COMPACTED USING VIBRATORY EQUIPMENT. VIBRATORY PLATE TAMPERS WORK WELL FOR COARSE GRAINED MATERIALS (CLASS I AND CLASS II).
    b. FINE MATERIALS REQUIRE KNEADING AND IMPACT FORCE ALONG WITH CONTROLLED WATER CONTENT TO ACHIEVE ACCEPTABLE DENSITIES. HAND TAMPERS OR AIR DRIVEN HAND-HELD IMPACT RAMMERS ARE SUITABLE FOR THE FINE GRAINED MATERIALS (CLASS III AND CLASS IV).
    c. IN TRENCHES, SMALL HAND-HELD OR WALK BEHIND COMPACTORS ARE REQUIRED TO PRECLUDE DAMAGE TO THE PIPE AND TO INSURE THOROUGH COMPACTION IN THE CONFINED AREAS AROUND THE PIPE AND ALONG THE TRENCH WALL.

EMBEDMENT MATERIAL & CLASS DESCRIPTIONS:
(SEE SPECIFICATIONS FOR SIEVE ANALYSIS)

CLASS I – ANGULAR,GRADED STONE, OR ROCK, DENSE OR OPEN GRADED W/ LITTLE OR NO FINES (¼" INCH TO 1½" INCH IN SIZE) (ALDOT #57 STONE, B-BASE)

CLASS II – CLEAN COARSE GRAINED SANDS & GRAVELS (1½" INCH MAXIMUM SIZE)

CLASS III – COARSE GRAINED MATERIAL W/FINES. GRAVEL OR SAND MUST COMPRISE MORE THAN 50% OF CLASS III MATERIALS. (1½" INCHES MAX. SIZE)

MAWSS MOBILE AREA WATER & SEWER SYSTEM	BOARD OF WATER AND SEWER COMMISSIONERS OF THE CITY OF MOBILE, ALABAMA	TYPICAL SANITARY SEWER DETAILS	DATE ISSUED: 01-11-10
		SEWER PIPE EMBEDMENT DETAILS	SCALE: N.T.S.
			DRAWING NO. SS-101

REVISION

McCrory Williams
INCORPORATED
Engineers Surveyors

3207 INTERNATIONAL DR., SUITE G
MOBILE, ALABAMA
36606
PHONE: (251) 476-4720
FAX: (251) 476-4721
EMAIL: mail@mcwinc.com

M5712-2650 ####

ESLAVA CREEK FORCE MAIN REPLACEMENT

MISCELLANEOUS DETAILS

BOARD OF WATER AND SEWER COMMISSIONERS OF THE CITY OF MOBILE

SCALE: NOT TO SCALE	DATE: 2019	DRAWN BY: AKE	APPROVED BY: WEW	SHEET 15C OF 19

3800 Composite Assembly

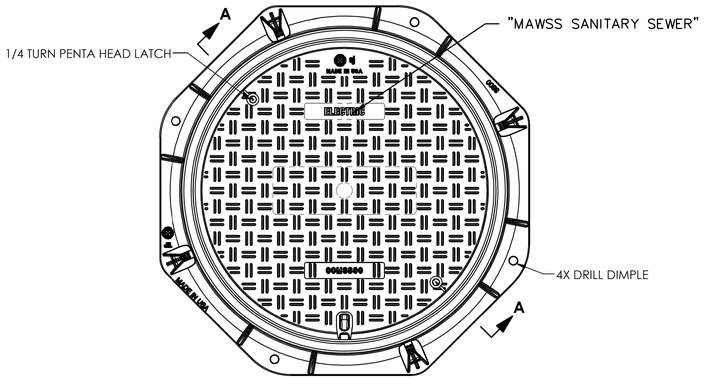

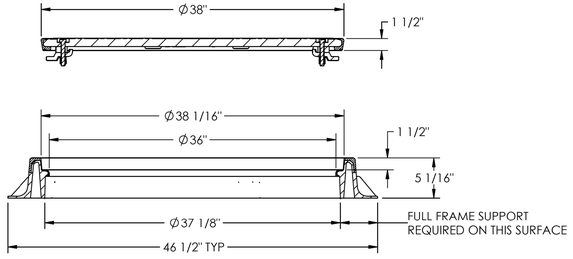

SECTION A-A

Product Number
COM380140A01

Design Features
-Load Rating
H25 (50,000 lb)
-Estimated Weight
132 lb
-Required Accessory
13/16" Penta Head Wrench - Sold Separate
-Country of Origin: USA

Performance Specification
-Proofload per AASHTO M306-10
-Max. Operating Temp: 160 °F

Major Components
COM380129
COM380140

Drawing Revision
03/27/2015 Designer: MAH
04/30/2019 Revised By: EGS-1

Disclaimer
Weights (lbs/kg), dimensions (inches/mm) and drawings provided for your guidance. We reserve the right to modify specifications without prior notice.

CONFIDENTIAL: This drawing is the property of EJ Group, Inc. and embodies confidential information, registered marks, patents, trade secret information, and/or know-how that is the property of EJ Group, Inc. Copyright © 2019 EJ Group, Inc. All rights reserved.

Contact
800 626 4653
ejco.com

3200 Assembly

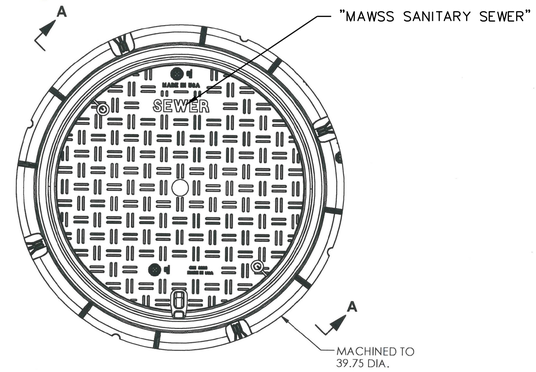

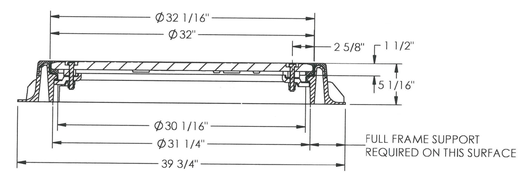

SECTION A-A

Product Number
COM320117A01

Design Features
-Proof Load
NO TRAFFIC
-Estimated Weight
Cover 61.6 lbs.
Frame 45.1lbs.
-Country of Origin: USA
-Material
Laminate PU10101
Dampener PU30101

Performance Specification
NO TRAFFIC
-Max. Operating Temp: 160 °F

Major Components
COM320117
COM320080

Drawing Revision
9/26/2017 Designer: MDF
Revised By:

Disclaimer
Weights (lbs/kg), dimensions (inches/mm) and drawings provided for your guidance. We reserve the right to modify specifications without prior notice.

CONFIDENTIAL: This drawing is the property of EJ Group, Inc. and embodies confidential information, registered marks, patents, trade secret information, and/or know-how that is the property of EJ Group, Inc. Copyright © 2014 EJ Group, Inc. All rights reserved.

Contact
800 626 4653
ejco.com

FRAME AND COVER FOR GATE VALVE ASSEMBLY

N.T.S.

FRAME AND COVER FOR AIR RELEASE VALVE ASSEMBLY

N.T.S.

REVISION	McCrory Williams INCORPORATED Engineers Surveyors	3207 INTERNATIONAL DR., SUITE G MOBILE, ALABAMA 36606 PHONE: (251) 476-4720 FAX: (251) 476-4721 EMAIL: mail@mcwinc.com	M5712-2650 ####	ESLAVA CREEK FORCE MAIN REPLACEMENT MISCELLANEOUS DETAILS BOARD OF WATER AND SEWER COMMISSIONERS OF THE CITY OF MOBILE	
				SCALE: NOT TO SCALE / DATE: 2019 / DRAWN BY: AKE / APPROVED BY: WEW	SHEET 15D OF 19

PLAN VIEW

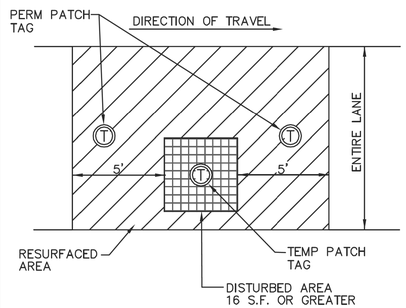

(AREAS 16 S.F. OR GREATER BUT LESS THAN 70' OR 10% OF BLOCK LENGTH)

CROSS-SECTION VIEW

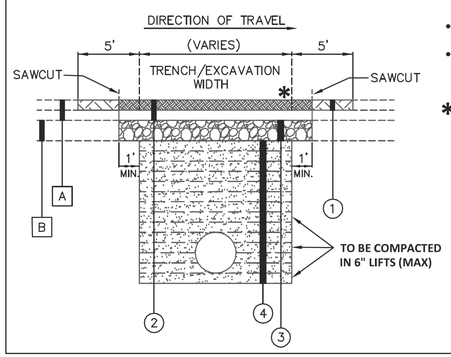

PERMITTEE TAG DESIGN REQUIREMENTS

- ALL TEMPORARY AND PERMANENT PATCHES ARE REQUIRED TO HAVE A PERMITTEE IDENTIFICATION TAG INSTALLED ACCORDING TO THE REQUIREMENTS OF SECTION 57-240 OF THE CITY OF MOBILE RIGHTS OF WAY CONSTRUCTION AND ADMINISTRATION ORDINANCE.
- TAGS SHALL BE PLACED A MINIMUM OF 12" FROM THE EDGE OF PATCH.
- TAGS SHALL BE PLACED OUT OF DIRECT WHEEL TRAFFIC WHEN POSSIBLE.

PATCH LENGTH	LONGITUDINAL TAG PLACEMENT
LESS THAN 50'	CENTER
50' TO 100'	ENDS
100' TO 400'	ENDS & CENTER
GREATER THAN 400'	ENDS & EVERY 200'

EXISTING MATERIALS LEGEND

A. EXISTING INPLACE PAVEMENT
B. EXISTING INPLACE ROADWAY BASE

REQUIRED MATERIALS LEGEND

1. ALDOT 429A — IMPROVED BITUMINOUS CONCRETE WEARING SURFACE LAYER (MATCH EXISTING THICKNESS)
2. ALDOT 429B — IMPROVED BITUMINOUS CONCRETE BINDER LAYER (MATCH EXISTING THICKNESS)
3. ALDOT 301A — CRUSHED AGGREGATE BASE COURSE, TYPE B, PLANT MIXED, 6" COMPACTED THICKNESS (COMPACTED TO 100% MAX DRY DENSITY)
4. ALDOT 210D — BORROW EXCAVATION (A2 OR BETTER) (COMPACTED TO 95% MAX DRY DENSITY) (PLACED IN 6" MAX LIFTS)†

† ALDOT 210F BORROW EXCAVATION (UNDERWATER BACKFILL) (ALDOT #57 STONE) MAY BE USED ONLY WHEN PROPER COMPACTION CANNOT BE ACHIEVED DUE TO EXCAVATION BELOW THE WATERTABLE OR OBSTRUCTIONS SUCH AS UTILITIES.

NOTES

- THE ENTIRE WIDTH OF ANY LANE AFFECTED SHALL BE RESURFACED IN ITS ENTIRETY.
- WHEN PRESENT, ANY EXISTING CONCRETE PANELS OVERLAIN WITH ASPHALT AFFECTED SHALL BE REPLACED IN THEIR ENTIRETY. THE NEWLY PLACED CONCRETE PANELS SHALL BE DOWELED INTO THE ADJACENT EXISTING CONCRETE PANELS ACCORDING TO ALDOT STANDARD DRAWING CPR-453 (SHEET 3).
- ALL ROADWAY BUILDUP ITEMS SHALL MEET THE MATERIAL AND CONSTRUCTION REQUIREMENTS OF THE 2006 ALDOT STANDARD SPECIFICATIONS FOR HIGHWAY CONSTRUCTION.
- ANY EXISTING STRIPING, MARKINGS, AND/OR LEGENDS AFFECTED SHALL BE REPLACED WITH CLASS 2, TYPE A MATERIAL (REFLECTIVE THERMOPLASTIC).
- DEPENDING ON THE LOCATION AND EXTENT OF THE WORK, THE CITY ENGINEER MAY REQUIRE GEOTECHNICAL TESTING TO BE PERFORMED AND A PATCHING DETAIL BE DESIGNED BASED ON A GEOTECHNICAL ENGINEER'S RECOMMENDATIONS.

* UNLESS PASSING GEOTECHNICAL COMPACTION TESTING IS PROVIDED TO THE CITY ENGINEER, A TEMPORARY PATCH SHALL BE PLACED AND REMAIN FOR 90 DAYS TO ALLOW FOR THE SETTLING AND COMPACTION OF UNDERLYING SOIL. IF A BINDER LAYER IS PRESENT, THE BINDER LAYER SHALL BE PLACED UP TO THE SURFACE ELEVATION. IF NO BINDER LAYER IS PRESENT, A COLD PATCH MAY BE APPLIED. AFTER 90 DAYS, THE TEMPORARY PATCH SHALL BE MILLED TO THE DEPTH OF THE EXISTING WEARING SURFACE AND THE PERMANENT ASPHALT WEARING SURFACE PATCH SHALL BE APPLIED TO THE RESURFACING LIMITS. NO COLD MIX MATERIAL SHALL REMAIN IN THE PERMANENT RESTORATION.

N.T.S.

CITY OF MOBILE, ALABAMA
ENGINEERING DEPARTMENT
TYPICAL PAVEMENT PATCHING DETAIL FOR ASPHALT ROADWAYS (AREAS 16 S.F. OR GREATER)

STANDARD DRAWING 11	SHEET 1 OF 3	7/31/2017

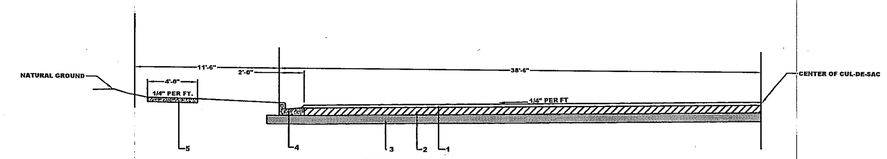

TYPICAL ROADWAY SECTION AT CUL-DE-SAC

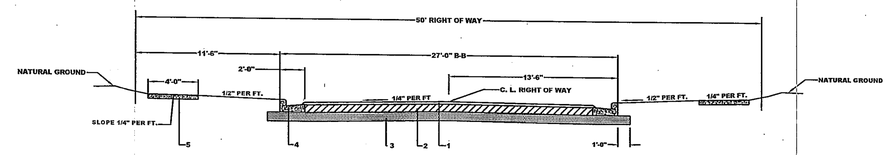

TYPICAL ROADWAY SECTION

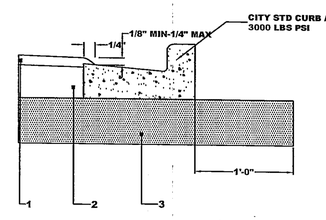

ASPHALT OVERLAPPING DETAIL

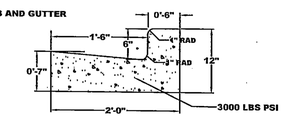

COMBINATION CURB AND GUTTER DETAIL CITY STANDARD

C:\DETAILS\TYPICALROADWAY.DWG

ROADWAY DESCRIPTION

NOTE: REFERENCE ALDOT STANDARD SPECIFICATIONS FOR HIGHWAY CONSTRUCTION, 2001 EDITION EXCEPT AS NOTED.

1. **SECTION 416-A (1992 EDITION) IMPROVED BITUMINOUS CONCRETE WEARING SURFACE LAYER, MIX 2, 1-1/2 INCH MINIMUM COMPACTED THICKNESS (165 LBS/SQ. YD. TYPICAL).**
2. **SECTION 825.03 6 INCH CRUSHED AGGREGATE BASE COURSE, TYPE B.**
3. **SECTION 230 MODIFIED OR IMPROVED ROADBED PROCESSING 8 INCH COMPACTED THICKNESS, TESTING AND DENSITY REQUIREMENTS AS PER GEOTECHNICAL ENGINEER RECOMMENDATION.**
4. **COMBINATION CURB AND GUTTER, CITY STANDARD.**
5. **4 FOOT SIDEWALK CITY STANDARD, 4 INCH THICK, (5 INCH THICK THROUGH DRIVEWAYS) 3000 PSI.**

STANDARD DRAWING 1

REVISION

McCrory Williams
INCORPORATED
Engineers Surveyors
3207 INTERNATIONAL DR., SUITE G
MOBILE, ALABAMA
36606
PHONE: (251) 476-4720
FAX: (251) 476-4721
EMAIL: mail@mcwinc.com

M5712-2650 ####

ESLAVA CREEK FORCE MAIN REPLACEMENT

MISCELLANEOUS DETAILS

BOARD OF WATER AND SEWER COMMISSIONERS OF THE CITY OF MOBILE

SCALE: NOT TO SCALE	DATE: 2019	DRAWN BY: AKE	APPROVED BY: WEW	SHEET 15E OF 19

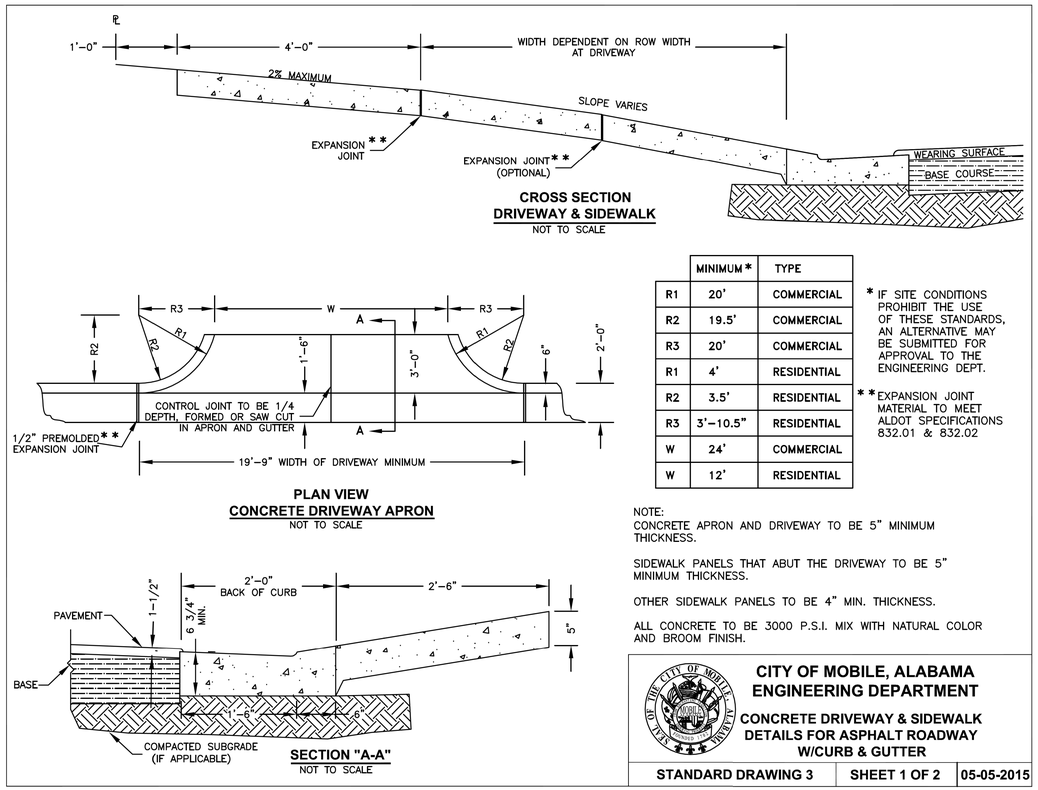

	MINIMUM*	TYPE
R1	20'	COMMERCIAL
R2	19.5'	COMMERCIAL
R3	20'	COMMERCIAL
R1	4'	RESIDENTIAL
R2	3.5'	RESIDENTIAL
R3	3'-10.5"	RESIDENTIAL
W	24'	COMMERCIAL
W	12'	RESIDENTIAL

* IF SITE CONDITIONS PROHIBIT THE USE OF THESE STANDARDS, AN ALTERNATIVE MAY BE SUBMITTED FOR APPROVAL TO THE ENGINEERING DEPT.

**EXPANSION JOINT MATERIAL TO MEET ALDOT SPECIFICATIONS 832.01 & 832.02

NOTE:
CONCRETE APRON AND DRIVEWAY TO BE 5" MINIMUM THICKNESS.

SIDEWALK PANELS THAT ABUT THE DRIVEWAY TO BE 5" MINIMUM THICKNESS.

OTHER SIDEWALK PANELS TO BE 4" MIN. THICKNESS.

ALL CONCRETE TO BE 3000 P.S.I. MIX WITH NATURAL COLOR AND BROOM FINISH.

CITY OF MOBILE, ALABAMA
ENGINEERING DEPARTMENT
CONCRETE DRIVEWAY & SIDEWALK DETAILS FOR ASPHALT ROADWAY W/CURB & GUTTER

STANDARD DRAWING 3	SHEET 1 OF 2	05-05-2015

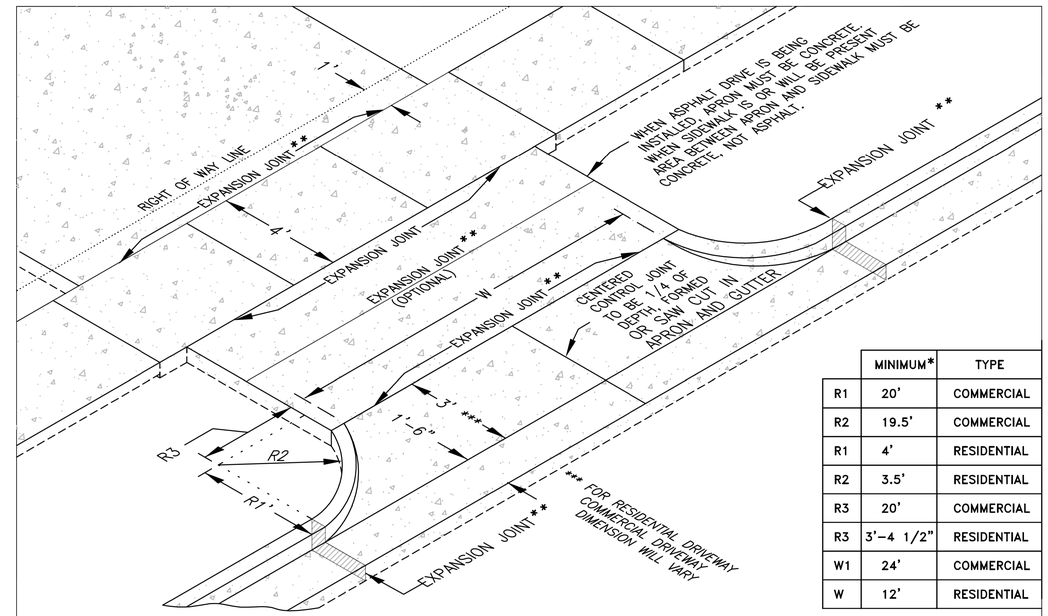

	MINIMUM*	TYPE
R1	20'	COMMERCIAL
R2	19.5'	COMMERCIAL
R1	4'	RESIDENTIAL
R2	3.5'	RESIDENTIAL
R3	20'	COMMERCIAL
R3	3'-4 1/2"	RESIDENTIAL
W1	24'	COMMERCIAL
W	12'	RESIDENTIAL

NOTES: CONCRETE APRON AND DRIVEWAY TO BE 5" MIN. THICKNESS.
SIDEWALK PANELS THAT ABUT THE DRIVEWAY TO BE 5" MIN. THICKNESS.
OTHER SIDEWALK PANELS TO BE 4" MIN. THICKNESS. ALL CONCRETE TO BE 3000 LB. MIX WITH NATURAL COLOR AND BROOM FINISH.

* IF SITE CONDITIONS PROHIBIT THE USE OF THESE STANDARDS, AN ALTERNATIVE MAY BE SUBMITTED FOR APPROVAL TO THE ENGINEERING DEPT.

**EXPANSION JOINT MATERIAL TO MEET ALDOT SPECIFICATIONS 832.01 & 832.02

CITY OF MOBILE, ALABAMA
ENGINEERING DEPARTMENT
CONCRETE DRIVEWAY DETAIL FOR ASPHALT ROADWAY W/CURB & GUTTER STREET

STANDARD DRAWING 3	SHEET 2 OF 2	05-05-2015

REVISION

McCrory Williams
INCORPORATED
Engineers Surveyors

3207 INTERNATIONAL DR., SUITE G
MOBILE, ALABAMA
36606
PHONE: (251) 476-4720
FAX: (251) 476-4721
EMAIL: mail@mcwinc.com

M5712-2650
####

ESLAVA CREEK FORCE MAIN REPLACEMENT

MISCELLANEOUS DETAILS

BOARD OF WATER AND SEWER COMMISSIONERS OF THE CITY OF MOBILE

SCALE: NOT TO SCALE	DATE: 2019	DRAWN BY: AKE	APPROVED BY: WEW	SHEET 15F OF 19

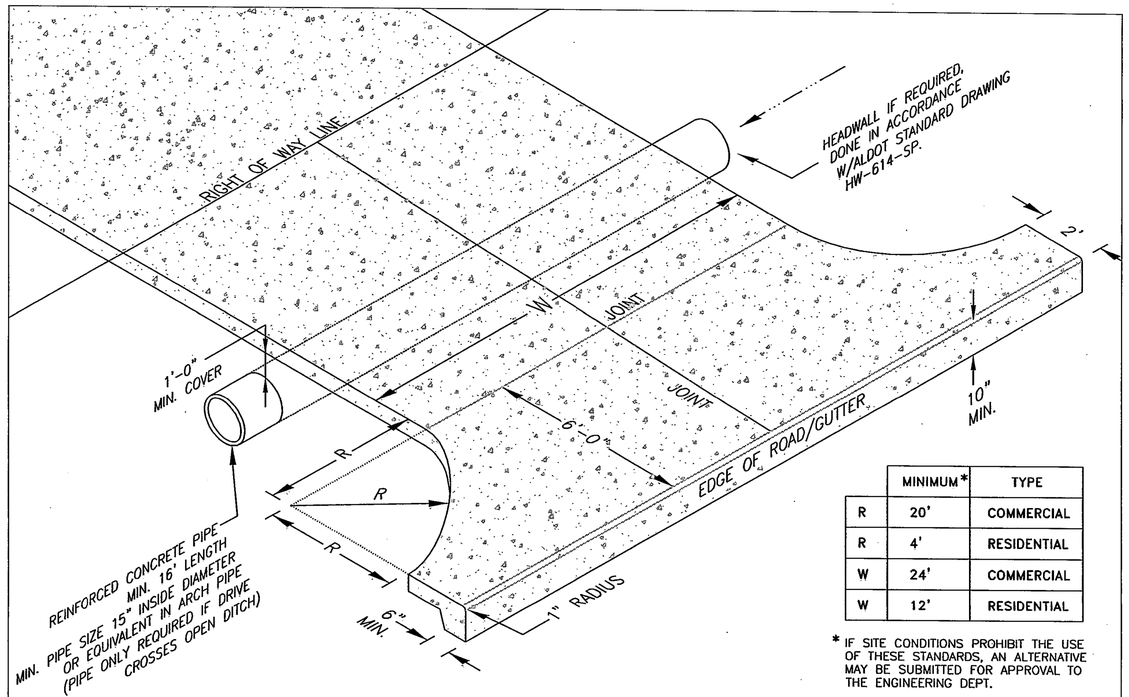

	MINIMUM*	TYPE
R	20'	COMMERCIAL
R	4'	RESIDENTIAL
W	24'	COMMERCIAL
W	12'	RESIDENTIAL

* IF SITE CONDITIONS PROHIBIT THE USE OF THESE STANDARDS, AN ALTERNATIVE MAY BE SUBMITTED FOR APPROVAL TO THE ENGINEERING DEPT.

NOTE: CONCRETE APRON AND DRIVEWAY TO BE 5" MIN. THICKNESS.
ALL CONCRETE TO BE 3000 LB. MIX WITH NATURAL COLOR AND BROOM FINISH.

CITY OF MOBILE, ALABAMA
ENGINEERING DEPARTMENT

CONCRETE DRIVEWAY DETAILS FOR ASPHALT ROADWAY W/O CURB & GUTTER & SIDEWALK

STANDARD DRAWING 5	SHEET 2 OF 2	05-26-10

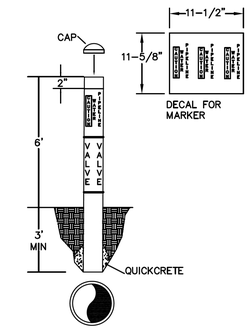

USE ON WATER & SEWER LINES RUNNING THROUGH NON-RESIDENTIAL AREAS.

- 1 – 40LB BAG OF QUICKCRETE(MIN)
- PLACE MARKER DIRECTLY OVER PIPELINE
- MARKER SHALL BE PLUMB
- FLARE BOTTOM OF HOLE FOR QUICKCRETE

GUIDE FOR INSTALLATION OF 3" PVC WATER & SEWER PIPELINE MARKERS

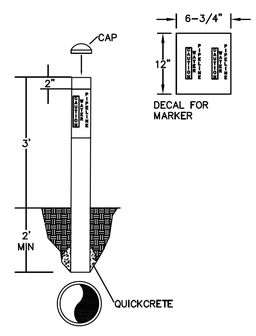

USE ON WATER & SEWER LINES RUNNING THROUGH NON-RESIDENTIAL AREAS.

- ½ – 40LB BAG OF QUICKCRETE(MIN)
- PLACE MARKER DIRECTLY OVER PIPELINE
- MARKER SHALL BE PLUMB
- FLARE BOTTOM OF HOLE FOR QUICKCRETE

GUIDE FOR INSTALLATION OF 12" PVC WATER & SEWER PIPELINE MARKERS

REVISION

McCrory Williams
INCORPORATED
Engineers Surveyors

3207 INTERNATIONAL DR., SUITE G
MOBILE, ALABAMA
36606
PHONE: (251) 476-4720
FAX: (251) 476-4721
EMAIL: mail@mcwinc.com

M5712-2650
####

ESLAVA CREEK FORCE MAIN REPLACEMENT

MISCELLANEOUS DETAILS

BOARD OF WATER AND SEWER COMMISSIONERS OF THE CITY OF MOBILE

SCALE: NOT TO SCALE	DATE: 2019	DRAWN BY: AKE	APPROVED BY: WEW	SHEET 15G OF 19

GdM5712\2650_48in Eslava Creek FM Parallel Lines\ACAD\CIVIL\PLAN\Mobile Sewer (15-19).dgn

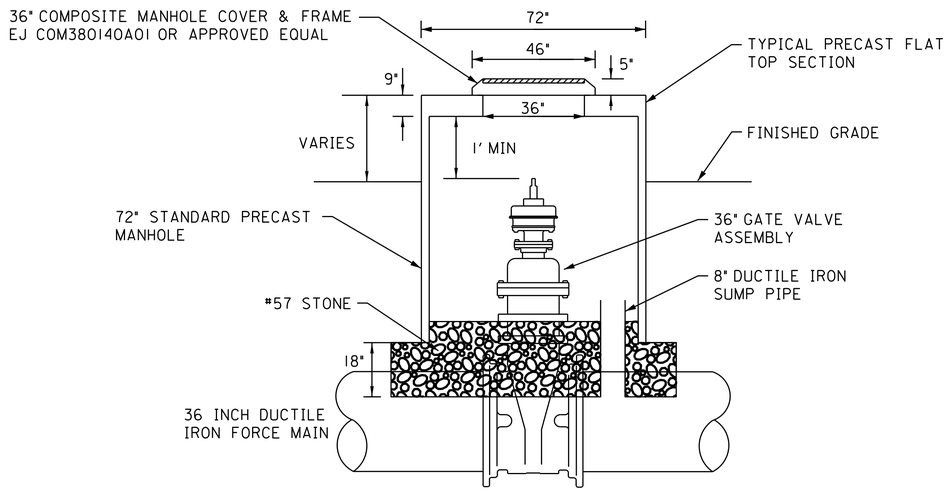

GATE VALVE ASSEMBLY

N.T.S.

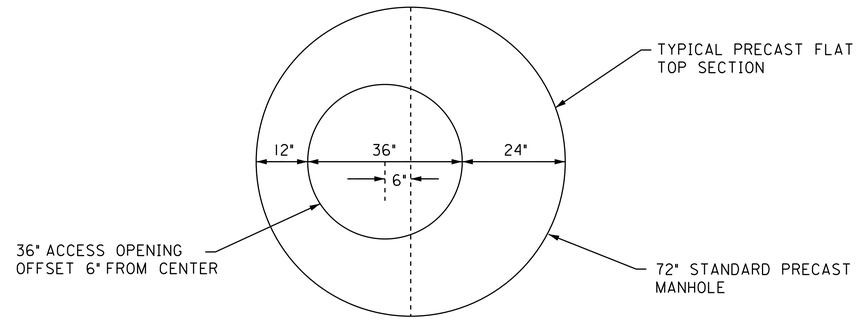

72" PRECAST MANHOLE (PLAN VIEW)

N.T.S.

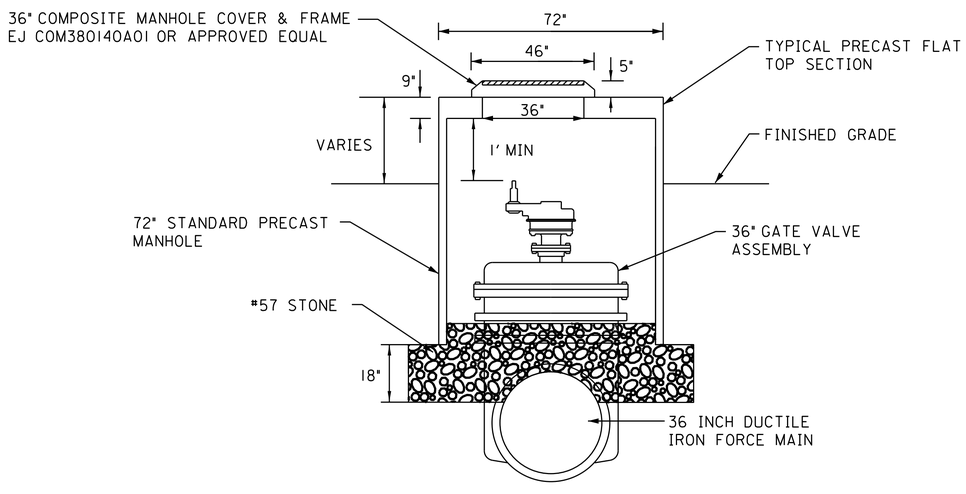

GATE VALVE ASSEMBLY

N.T.S.

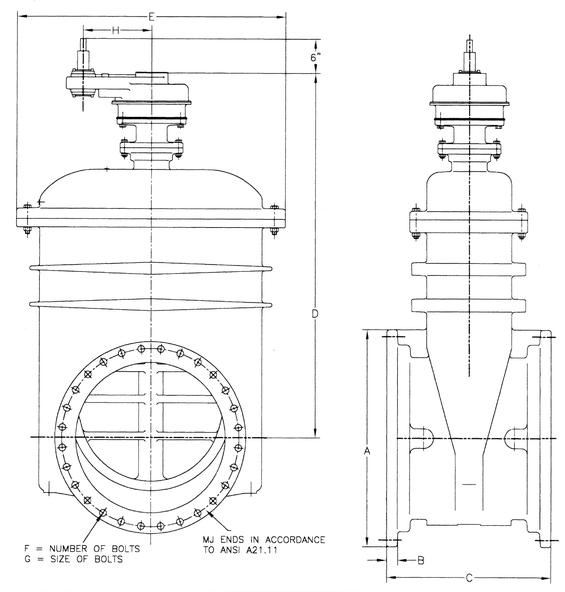

VALVE SIZE	A	B	C	D	E	F	G	H	WEIGHT
30	39 1/2	1 11/16	35 1/2	74	54 3/4	20	1	14	5,400
36	46 1/2	2	38 3/4	83 11/16	58 7/8	24	1	14	7,200
42	54	2	39	102 1/2	78	28	1 1/4	16	15,200
48	60 3/4	2	42	105 1/2	78	32	1 1/4	16	15,500

TURNS TO OPEN: (30"=587) (36"=705) (42"=1,056) (48"=1,200)
HANDWHEEL OPTIONAL: (30"&36"=24" DIAMETER) (42"&48"=28" DIAMETER)

GATE VALVE ASSEMBLY

N.T.S.

REVISION

McCrory Williams
INCORPORATED
Engineers Surveyors

3207 INTERNATIONAL DR., SUITE G
MOBILE, ALABAMA
36606
PHONE: (251) 476-4720
FAX: (251) 476-4721
EMAIL: mail@mcwinc.com

M5712-2650
####

ESLAVA CREEK FORCE MAIN REPLACEMENT

MISCELLANEOUS DETAILS

BOARD OF WATER AND SEWER COMMISSIONERS OF THE CITY OF MOBILE

SCALE: NOT TO SCALE	DATE: 2019	DRAWN BY: AKE	APPROVED BY: WEW	SHEET 15H OF 19

PROJECT NAME: MAWSS ESLAVA CREEK FORCE MAIN

G.E.T. PROJ. NUMBER: 19-103

PROJECT LOCATION: MOBILE, ALABAMA

DRILL RIG: SIMCO 2400

DRILL METHOD: MUD ROTARY

DRILL CREW: SW,LJ, JH(LOGGER)

DATE DRILLED: 5/8/19

BORING DEPTH: 40 FT.

BORING ELEV.:

DATUM:

WATER DEPTH: 3.7 FT. measured 5-9-19

REMARKS:

GEOTECHNICAL ENGINEERING TESTING, INC.

BORING NUMBER: P3-19

BORING LOCATION: SEE AERIAL IMAGE

DEPTH IN FEET	LOG	DESCRIPTION	SAMPLE NO.	S.P.T. N_f	S.P.T. N_c	W.C. %	ATTERBERG LIMITS L.L.	ATTERBERG LIMITS P.I.	DRY UNIT WT. pcf	% MINUS #200	SHEAR STRENGTH tsf	UNIFIED CLASS
0		Silty sand (SM), fine, firm, dark brown & black, w/ small amount organics & trace fine gravel	1	13								
5			2	1								
10		Clayey sand (SC), fine, very loose to loose, gray, w/ wood near 9'	3	1								
15			4	8		30						
		Lean organic clay (CL-OL), very soft, brownish gray	5	1		62						
20			6	4		41	71	47				
		Fat clay (CH), soft, gray	7	4		32						
25		Silty sandy clay (CLS-ML), soft, gray	8	4		30						
			9	5		44						
30		Fat clay (CH), medium to stiff consistency, gray	10	12		32	57	35			c*=0.38	
			11	9								
35		Silty sand (SM), fine, firm, reddish brown & gray, w/ gray silty clay pockets & trace ironstone near 37'	12	19		28				22.0		
			13	13								
40		B.T. @ 40 FT	14	16								
45												
50												
55												
60												
65												

NOTE: The stratification lines shown represent the approximate boundary between soil types and the transition may be gradual. The groundwater level stated is for conditions at the time of boring and the level may fluctuate large amounts for other conditions or seasons.

Reviewed By:

MOD DEEP BORING LOG W/O NC VALUES 19-103 ESLAVA CREEK FORCE MAIN.GPJ GETI AL.GDT 6/20/19

PROJECT NAME: MAWSS ESLAVA CREEK FORCE MAIN

G.E.T. PROJ. NUMBER: 19-103

PROJECT LOCATION: MOBILE, ALABAMA

DRILL RIG: MOBILE B37

DRILL METHOD: MUD ROTARY

DRILL CREW: ES,BT, CS(LOGGER)

DATE DRILLED: 11/9/19

BORING DEPTH: 80 FT.

BORING ELEV.:

DATUM:

WATER DEPTH: NOT MEASURED

REMARKS:

GEOTECHNICAL ENGINEERING TESTING, INC.

BORING NUMBER: P3-19A

BORING LOCATION: SEE AERIAL IMAGE

DEPTH IN FEET	LOG	DESCRIPTION	SAMPLE NO.	S.P.T. N_f	S.P.T. N_c	W.C. %	ATTERBERG LIMITS L.L.	ATTERBERG LIMITS P.I.	DRY UNIT WT. pcf	% MINUS #200	SHEAR STRENGTH tsf	UNIFIED CLASS
0												
5		No samples collected										
10		Fat sandy clay (CHS), very soft, gray	3	1								
15		Sand (SP-SM), fine, loose, gray, with silt and with trace organics	4	5								
20		Fat clay (CH), very soft, gray, w/ wood & organics	5	1							c*=0.31	
25			6	4								
30		Fat clay (CH), soft, gray to light brownish gray	7	2							c*=0.38	
35			8	14								
40		Silty sand (SM), fine, firm, yellowish reddish brown & light brown, w/ clay lenses & pockets	9	14								
45			10	18								
50			11	22								
55		Sand (SP), fine, firm to dense, light brown, trace medium sand	12	22								
60			13	26								
65			14	24								

NOTE: The stratification lines shown represent the approximate boundary between soil types and the transition may be gradual. The groundwater level stated is for conditions at the time of boring and the level may fluctuate large amounts for other conditions or seasons.

Reviewed By:

MOD DEEP BORING LOG W/O NC VALUES 19-103 ESLAVA CREEK FORCE MAIN.GPJ GETI AL.GDT 11/11/19

REVISION

McCrory Williams
INCORPORATED
Engineers Surveyors

3207 INTERNATIONAL DR., SUITE G
MOBILE, ALABAMA
36606
PHONE: (251) 476-4720
FAX: (251) 476-4721
EMAIL: mail@mcwinc.com

M5712-2650
####

ESLAVA CREEK FORCE MAIN REPLACEMENT

BORING LOGS

BOARD OF WATER AND SEWER COMMISSIONERS OF THE CITY OF MOBILE

SCALE:	DATE: 2019	DRAWN BY: AKE	APPROVED BY: WEW	SHEET 16 OF 19

PROJECT NAME: MAWSS ESLAVA CREEK FORCE MAIN

G.E.T. PROJ. NUMBER: 19-103

PROJECT LOCATION: MOBILE, ALABAMA

DRILL RIG: MOBILE B37

DRILL METHOD: MUD ROTARY

DRILL CREW: ES,BT, CS(LOGGER)

DATE DRILLED: 11/9/19

BORING DEPTH: 80 FT.

BORING ELEV.:

DATUM:

WATER DEPTH: NOT MEASURED

REMARKS:

GEOTECHNICAL ENGINEERING TESTING, INC.

BORING NUMBER: P3-19A

BORING LOCATION: SEE AERIAL IMAGE

DEPTH IN FEET	LOG	DESCRIPTION	SAMPLE NO.	S.P.T. N_f	S.P.T. N_C	W.C. %	ATTERBERG LIMITS L.L.	ATTERBERG LIMITS P.I.	DRY UNIT WT. pcf	% MINUS #200	SHEAR STRENGTH tsf	UNIFIED CLASS
65												
70		Sand (SP), fine, firm to dense, light brown, trace medium sand	15	31								
75		Sand (SP), fine to coarse, dense, pale reddish brown to light grayish brown, trace fine gravel	16	38								
80			17	41								
		B.T. @ 80 FT										
85												
90												
95												
100												
105												
110												
115												
120												
125												
130												

NOTE: The stratification lines shown represent the approximate boundary between soil types and the transition may be gradual. The groundwater level stated is for conditions at the time of boring and the level may fluctuate large amounts for other conditions or seasons.

Reviewed By:

MOD DEEP BORING LOG W/O NC VALUES 19-103 ESLAVA CREEK FORCE MAIN.GPJ GETI AL.GDT 11/11/19

PROJECT NAME: MAWSS ESLAVA CREEK FORCE MAIN

G.E.T. PROJ. NUMBER: 19-103

PROJECT LOCATION: MOBILE, ALABAMA

DRILL RIG: SIMCO 2400

DRILL METHOD: MUD ROTARY

DRILL CREW: SW,LJ, JH(LOGGER)

DATE DRILLED: 5/8/19

BORING DEPTH: 40 FT.

BORING ELEV.:

DATUM:

WATER DEPTH: 5.7 FT. measured 5-9-19

REMARKS:

GEOTECHNICAL ENGINEERING TESTING, INC.

BORING NUMBER: P3-18

BORING LOCATION: SEE AERIAL IMAGE

DEPTH IN FEET	LOG	DESCRIPTION	SAMPLE NO.	S.P.T. N_f	S.P.T. N_C	W.C. %	ATTERBERG LIMITS L.L.	ATTERBERG LIMITS P.I.	DRY UNIT WT. pcf	% MINUS #200	SHEAR STRENGTH tsf	UNIFIED CLASS
0		Silty sand (SM), fine, firm, black	1	16								
5		Poorly graded sand (SP), fine, very loose, light brown, w/ trace organics	2	1								
10		Clayey sand (SC), fine, very loose, gray	3	2		30				41.1		
15		Poorly graded sand (SP), fine, loose, gray	4	9								
		Lean organic clay (CL-OL), soft, brownish gray	5	2		75	72	50			c*=0.25	
20			6	3							c*=0.25	
		Silty clay (CL-ML), medium consistency, greenish gray, w/ trace organics	7	5		33						
25		Silty clayey sand (SC-SM), fine, loose, greenish gray	8	5		26						
		Lean clay (CH), medium to stiff consistency, gray	9	7		52	42	21				
30		Fat clay (CH), very stiff, reddish brown, w/ small amount ironstone	10	24		30						
		Silty clayey sand (SC-SM), fine, firm reddish brown & gray, w/ trace ironstone	11	14		28				39.4		
35			12	22								
		Silty sand (SM), fine, firm, light reddish brown	13	19		27				16.3		
40		Silty sand (SM), fine, firm, light gray, w/ clayey sand lenses	14	19								
		B.T. @ 40 FT										
45												
50												
55												
60												
65												

NOTE: The stratification lines shown represent the approximate boundary between soil types and the transition may be gradual. The groundwater level stated is for conditions at the time of boring and the level may fluctuate large amounts for other conditions or seasons.

Reviewed By:

MOD DEEP BORING LOG W/O NC VALUES 19-103 ESLAVA CREEK FORCE MAIN.GPJ GETI AL.GDT 6/20/19

REVISION

McCrory Williams
INCORPORATED
Engineers Surveyors

3207 INTERNATIONAL DR., SUITE G
MOBILE, ALABAMA
36606
PHONE: (251) 476-4720
FAX: (251) 476-4721
EMAIL: mail@mcwinc.com

M5712-2650
####

ESLAVA CREEK FORCE MAIN REPLACEMENT

BORING LOGS

BOARD OF WATER AND SEWER COMMISSIONERS OF THE CITY OF MOBILE

SCALE:	DATE: 2019	DRAWN BY: AKE	APPROVED BY: WEW	SHEET 16A OF 19

PROJECT NAME: MAWSS ESLAVA CREEK FORCE MAIN

G.E.T. PROJ. NUMBER: 19-103

PROJECT LOCATION: MOBILE, ALABAMA

DRILL RIG: SIMCO 2400

DRILL METHOD: MUD ROTARY

DRILL CREW: SW,LJ, JH(LOGGER)

DATE DRILLED: 5/9/19

BORING DEPTH: 40 FT.

BORING ELEV.:

DATUM:

WATER DEPTH: 4 FT. measured 5-30-19

REMARKS:

GEOTECHNICAL ENGINEERING TESTING, INC.

BORING NUMBER: P3-17

BORING LOCATION: SEE AERIAL IMAGE

DEPTH IN FEET	LOG	DESCRIPTION	SAMPLE NO.	S.P.T. N_I	S.P.T. N_C	W.C. %	ATTERBERG LIMITS L.L.	ATTERBERG LIMITS P.I.	DRY UNIT WT. pcf	% MINUS #200	SHEAR STRENGTH tsf	UNIFIED CLASS
0		Silty sand (SM), fine, firm, light gray & brown, w/ clay pocket near surface	1	14								
5			2	13		16						
10		Silty sandy clay (CLS-ML), soft, dark gray	3	2								
15		Organic clay (CL-OL), soft, dark brown & dark gray, w/ wood	4	3		135	199	99				
		Fat clay (CH), medium consistency, light gray & reddish brown, w/ some medium sand & w/ reddish brown sandstone seam	5	5		40						
20		Silty sand (SM), fine, loose, light gray	6	9		28				32.9		
			7	19								
25			8	19		24				6.3		
			9	23								
30		Poorly graded sand (SP), fine, firm to dense, light reddish brown & light gray	10	21								
			11	42		22				5.6		
35			12	21								
			13	38								
40			14	30								
		B.T. @ 40 FT										
45												
50												
55												
60												
65												

NOTE: The stratification lines shown represent the approximate boundary between soil types and the transition may be gradual. The groundwater level stated is for conditions at the time of boring and the level may fluctuate large amounts for other conditions or seasons.

Reviewed By:

PROJECT NAME: MAWSS ESLAVA CREEK FORCE MAIN

G.E.T. PROJ. NUMBER: 19-103

PROJECT LOCATION: MOBILE, ALABAMA

DRILL RIG: SIMCO 2400

DRILL METHOD: MUD ROTARY

DRILL CREW: SW,LJ, JH(LOGGER)

DATE DRILLED: 5/9/19

BORING DEPTH: 40 FT.

BORING ELEV.:

DATUM:

WATER DEPTH: 5.5 FT. measured 5-30-19

REMARKS:

GEOTECHNICAL ENGINEERING TESTING, INC.

BORING NUMBER: P3-16

BORING LOCATION: SEE AERIAL IMAGE

DEPTH IN FEET	LOG	DESCRIPTION	SAMPLE NO.	S.P.T. N_I	S.P.T. N_C	W.C. %	ATTERBERG LIMITS L.L.	ATTERBERG LIMITS P.I.	DRY UNIT WT. pcf	% MINUS #200	SHEAR STRENGTH tsf	UNIFIED CLASS
0		Silty clayey sand (SC-SM), fine, firm, brown & reddish brown	1	11								
5		Silty sand (SM), fine, firm, light gray	2	12		22						
10		Silty clayey sand (SC-SM), fine, very loose, brownish gray	3	2		30				50.0		
15		Organic clay (CL-OL), medium consistency, dark gray, with wood	4	4		98						
		Fat clay (CH), medium consistency, gray, light gray, reddish brown, w/ lenses of fine sand & w/ reddish brown sandstone seam	5	4		54	87	64				
20			6	7								
		Poorly graded sand (SP), fine, firm, light brown & reddish brown	7	18		28						
25		Poorly graded sand with silty (SP-SM), fine, firm, light brown	8	19		24				11.1		
			9	22								
30			10	18		26				7.5		
		Poorly graded sand (SP), fine, firm to dense, light reddish brown	11	42								
35			12	22								
			13	42		21						
40			14	32								
		B.T. @ 40 FT										
45												
50												
55												
60												
65												

NOTE: The stratification lines shown represent the approximate boundary between soil types and the transition may be gradual. The groundwater level stated is for conditions at the time of boring and the level may fluctuate large amounts for other conditions or seasons.

Reviewed By:

MOD DEEP BORING LOG W/O NC VALUES 19-103 ESLAVA CREEK FORCE MAIN.GPJ GETI AL.GDT 6/20/19

REVISION

McCrory Williams INCORPORATED
Engineers Surveyors

3207 INTERNATIONAL DR., SUITE G
MOBILE, ALABAMA
36606
PHONE: (251) 476-4720
FAX: (251) 476-4721
EMAIL: mail@mcwinc.com

M5712-2650 ####

ESLAVA CREEK FORCE MAIN REPLACEMENT

BORING LOGS

BOARD OF WATER AND SEWER COMMISSIONERS OF THE CITY OF MOBILE

SCALE:	DATE: 2019	DRAWN BY: AKE	APPROVED BY: WEW	SHEET 16B OF 19

PROJECT NAME: MAWSS ESLAVA CREEK FORCE MAIN

G.E.T. PROJ. NUMBER: 19-103

PROJECT LOCATION: MOBILE, ALABAMA

DRILL RIG: SIMCO 2400

DRILL METHOD: MUD ROTARY

DRILL CREW: SW,LJ, JH(LOGGER)

DATE DRILLED: 5/7/19

BORING DEPTH: 20 FT.

BORING ELEV.:

DATUM:

WATER DEPTH:

REMARKS:

GEOTECHNICAL ENGINEERING TESTING, INC.

BORING NUMBER: P3-15

BORING LOCATION: SEE AERIAL IMAGE

DEPTH IN FEET	LOG	DESCRIPTION	SAMPLE NO.	S.P.T. N_f	S.P.T. N_c	W.C. %	ATTERBERG LIMITS L.L.	ATTERBERG LIMITS P.I.	DRY UNIT WT. pcf	% MINUS #200	SHEAR STRENGTH tsf	UNIFIED CLASS
0		Silty sand (SM), fine, firm, brown & gray, w/ some coarse sand & fine gravel	1	18								
		Interbedded pockets of fine sand and lean clay (SP/CL), gray & brown, w/ organics	2	21		27						
5		Silty clayey sand (SC-SM), fine, very loose, gray	3	2								
			4	2		32				46.2		
10			5	2								
		Sandy clay (CLS), soft to medium consistency, gray, w/ small sand pockets & w/ organics	6	2		36	50	22		53.7		CH
15			7	5								
		Poorly graded sand (SP), fine, firm, gray	8	12		26						
20		B.T. @ 20 FT										
25												
30												
35												
40												
45												
50												
55												
60												
65												

NOTE: The stratification lines shown represent the approximate boundary between soil types and the transition may be gradual. The groundwater level stated is for conditions at the time of boring and the level may fluctuate large amounts for other conditions or seasons.

Reviewed By:

MOD DEEP BORING LOG W/O NC VALUES 19-103 ESLAVA CREEK FORCE MAIN.GPJ GETI_AL.GDT 6/20/19

PROJECT NAME: MAWSS ESLAVA CREEK FORCE MAIN

G.E.T. PROJ. NUMBER: 19-103

PROJECT LOCATION: MOBILE, ALABAMA

DRILL RIG: SIMCO 2400

DRILL METHOD: MUD ROTARY

DRILL CREW: SW,LJ, JH(LOGGER)

DATE DRILLED: 5/7/19

BORING DEPTH: 20 FT.

BORING ELEV.:

DATUM:

WATER DEPTH: 7 FT. measured 5-7-19

REMARKS:

GEOTECHNICAL ENGINEERING TESTING, INC.

BORING NUMBER: P3-14

BORING LOCATION: SEE AERIAL IMAGE

DEPTH IN FEET	LOG	DESCRIPTION	SAMPLE NO.	S.P.T. N_f	S.P.T. N_c	W.C. %	ATTERBERG LIMITS L.L.	ATTERBERG LIMITS P.I.	DRY UNIT WT. pcf	% MINUS #200	SHEAR STRENGTH tsf	UNIFIED CLASS
0		Silty sand (SM), fine to coarse, loose, dark brown & dark gray, w/ organics & little fine gravel	1	5								
			2	9		14						
5		Silty sand (SM), fine, loose, light grayish brown	3	4								
			4	5		30				34.0		
10			5	2								
		Clayey sand (SC), fine, very loose, dark gray	6	2		25				33.5		
15			7	2		30	37	25		45.5		SC
			8	2								
20		B.T. @ 20 FT										
25												
30												
35												
40												
45												
50												
55												
60												
65												

NOTE: The stratification lines shown represent the approximate boundary between soil types and the transition may be gradual. The groundwater level stated is for conditions at the time of boring and the level may fluctuate large amounts for other conditions or seasons.

Reviewed By:

MOD DEEP BORING LOG W/O NC VALUES 19-103 ESLAVA CREEK FORCE MAIN.GPJ GETI_AL.GDT 6/20/19

REVISION

McCrory Williams
INCORPORATED
Engineers Surveyors

3207 INTERNATIONAL DR., SUITE G
MOBILE, ALABAMA
36606
PHONE: (251) 476-4720
FAX: (251) 476-4721
EMAIL: mail@mcwinc.com

M5712-2650 ####

ESLAVA CREEK FORCE MAIN REPLACEMENT

BORING LOGS

BOARD OF WATER AND SEWER COMMISSIONERS OF THE CITY OF MOBILE

SCALE:	DATE: 2019	DRAWN BY: AKE	APPROVED BY: WEW	SHEET 16C OF 19

PROJECT NAME: MAWSS ESLAVA CREEK FORCE MAIN

G.E.T. PROJ. NUMBER: 19-103

PROJECT LOCATION: MOBILE, ALABAMA

DRILL RIG: SIMCO 2400

DRILL METHOD: MUD ROTARY

DRILL CREW: SW,LJ, JH(LOGGER)

DATE DRILLED: 5/7/19

BORING DEPTH: 20 FT.

BORING ELEV.:

DATUM:

WATER DEPTH: 10.5 FT. measured 5-7-19

REMARKS:

GEOTECHNICAL ENGINEERING TESTING, INC.

BORING NUMBER: P3-13

BORING LOCATION: SEE AERIAL IMAGE

DEPTH IN FEET	LOG	DESCRIPTION	SAMPLE NO.	S.P.T. N_f	S.P.T. N_c	W.C. %	ATTERBERG LIMITS L.L.	ATTERBERG LIMITS P.I.	DRY UNIT WT. pcf	% MINUS #200	SHEAR STRENGTH tsf	UNIFIED CLASS
0		Silty sand (SM), fine, loose, grayish brown, w/ shell fragments	1	7								
			2	9								
5			3	8		21	42	29		45.0		SC
		Silty clayey sand (SC-SM), fine, loose to firm, yellowish red, light gray & light brown	4	8								
10			5	13		26				53.8		
			6	11								
15		Silty sand (SM), fine, firm, light gray										
		Poorly graded sand (SP), fine, loose, light brown, w/ small clayey sand pockets	7	9		21						
20		Organic clay (CH-OL), stiff, dark gray	8	11		119						
		B.T. @ 20 FT										
25												
30												
35												
40												
45												
50												
55												
60												
65												

NOTE: The stratification lines shown represent the approximate boundary between soil types and the transition may be gradual. The groundwater level stated is for conditions at the time of boring and the level may fluctuate large amounts for other conditions or seasons.

Reviewed By:

MOD DEEP BORING LOG W/O NC VALUES 19-103 ESLAVA CREEK FORCE MAIN.GPJ GETI_AL.GDT 6/20/19

PROJECT NAME: ESLAVA CREEK FORCE MAIN - PHASE I

G.E.T. PROJ. NUMBER: 19-103

PROJECT LOCATION: MOBILE, ALABAMA

DRILL RIG: SIMCO 2400

DRILL METHOD: MUD ROTARY

DRILL CREW: ES,WH, CS(LOGGER)

DATE DRILLED: 3/20/19

BORING DEPTH: 40 FT.

BORING ELEV.:

DATUM:

WATER DEPTH:

REMARKS:

GEOTECHNICAL ENGINEERING TESTING, INC.

BORING NUMBER: P3-9

BORING LOCATION: SEE AERIAL IMAGE

DEPTH IN FEET	LOG	DESCRIPTION	SAMPLE NO.	S.P.T. N_f	S.P.T. N_c	W.C. %	ATTERBERG LIMITS L.L.	ATTERBERG LIMITS P.I.	DRY UNIT WT. pcf	% MINUS #200	SHEAR STRENGTH tsf	UNIFIED CLASS
0		2" Crushed aggregate										
		Silty sand (SM), fine, firm, dark reddish brown, trace fine gravel	1	20								
5		Silty clayey sand (SC-SM), fine, firm, brownish red	2	11		17	25	9		32.9		SC
			3	12								
10		Silty sand (SM), fine, firm, pale red, w/ small pockets of light gray clay	4	11		21				38.7		
			5	12								
15		Silty sand / fat clay (SM/CH), fine sand, firm light gray, interedded pockets of silty sand and fat clay	6	21		22	23	8		27.7		SC
			7	22								
20			8	40								
		Poorly graded sand (SP), fine to medium, danse, light brown, trace small shell near 27'	9	40		25	NP	NP		5.4		SP-SM
25			10	45								
			11	42								
30		Poorly graded sand (SP), fine to medium, firm, light brown, trace fine gravel near 32'	12	26								
			13	25		21	NP	NP		6.0		SP-SM
35		Poorly graded sand (SP), fine to medium, dense, light brown, trace fine gravel below 35'	14	37								
			15	37								
40			16	34								
		B.T. @ 40 FT										
45												
50												
55												
60												
65												

NOTE: The stratification lines shown represent the approximate boundary between soil types and the transition may be gradual. The groundwater level stated is for conditions at the time of boring and the level may fluctuate large amounts for other conditions or seasons.

Reviewed By:

MOD DEEP BORING LOG W/O NC VALUES 19-103 ESLAVA CREEK FORCE MAIN.GPJ GETI_AL.GDT 4/1/19

REVISION

McCrory Williams
INCORPORATED
Engineers Surveyors

3207 INTERNATIONAL DR., SUITE G
MOBILE, ALABAMA
36606
PHONE: (251) 476-4720
FAX: (251) 476-4721
EMAIL: mail@mcwinc.com

M5712-2650
####

ESLAVA CREEK FORCE MAIN REPLACEMENT

BORING LOGS

BOARD OF WATER AND SEWER COMMISSIONERS OF THE CITY OF MOBILE

SCALE:	DATE: 2019	DRAWN BY: AKE	APPROVED BY: WEW	SHEET 16D OF 19

PROJECT NAME: MAWSS ESLAVA CREEK FORCE MAIN

G.E.T. PROJ. NUMBER: 19-103

PROJECT LOCATION: MOBILE, ALABAMA

DRILL RIG: SIMCO 2400

DRILL METHOD: MUD ROTARY

DRILL CREW: SW,JH, WM(LOGGER)

DATE DRILLED: 4/2/19

BORING DEPTH: 15 FT.

BORING ELEV.:

DATUM:

WATER DEPTH: 2 FT. measured 4-17-19

REMARKS:

GEOTECHNICAL ENGINEERING TESTING, INC.

BORING NUMBER: P3-8

BORING LOCATION: SEE AERIAL IMAGE

DEPTH IN FEET	LOG	DESCRIPTION	SAMPLE NO.	S.P.T. N_f	S.P.T. N_c	W.C. %	ATTERBERG LIMITS L.L.	ATTERBERG LIMITS P.I.	DRY UNIT WT. pcf	% MINUS #200	SHEAR STRENGTH tsf	UNIFIED CLASS
0			1	6								
			2	7								
		Silt and silty sand (ML/SM), interbedded layers & pockets, loose, dark gray & dark brown, pockets of lean clay	3	7		18	NP	NP		31.7		SM
5			4	7								
			5	8		19	NP	NP		26.5		SM
10		Silty sand (SM), fine, firm, yellowish red & light brown, pocket of brown lean clay near 14'	6	20		17	NP	NP		24.5		SM
15			7	22								
		B.T. @ 15 FT										
20												
25												
30												
35												
40												
45												
50												
55												
60												
65												

NOTE: The stratification lines shown represent the approximate boundary between soil types and the transition may be gradual. The groundwater level stated is for conditions at the time of boring and the level may fluctuate large amounts for other conditions or seasons.

Reviewed By:

MOD DEEP BORING LOG W/O NC VALUES 19-103 ESLAVA CREEK FORCE MAIN.GPJ GETI AL GDT 7/24/19

PROJECT NAME: MAWSS ESLAVA CREEK FORCE MAIN

G.E.T. PROJ. NUMBER: 19-103

PROJECT LOCATION: MOBILE, ALABAMA

DRILL RIG: SIMCO 2400

DRILL METHOD: MUD ROTARY

DRILL CREW: SW,JH, WM(LOGGER)

DATE DRILLED: 4/2/19

BORING DEPTH: 50 FT.

BORING ELEV.:

DATUM:

WATER DEPTH: 10.5 FT. measured 4-17-19

REMARKS:

GEOTECHNICAL ENGINEERING TESTING, INC.

BORING NUMBER: P3-7

BORING LOCATION: SEE AERIAL IMAGE

DEPTH IN FEET	LOG	DESCRIPTION	SAMPLE NO.	S.P.T. N_f	S.P.T. N_c	W.C. %	ATTERBERG LIMITS L.L.	ATTERBERG LIMITS P.I.	DRY UNIT WT. pcf	% MINUS #200	SHEAR STRENGTH tsf	UNIFIED CLASS
0			1	4								
		Silt with sand (MLS), loose, dark brown, organic	2	3								
			3	8								
5		Lean clay (CL), stiff, light gray, red, light brown	4	11		23	39	14				
			5	12								
10		Poorly graded sand (SP), fine, firm, light brown & light yellowish brown, clay in lenses	6	16								
		Lean clay & clayey sand (CL/SC), interbedded layers & pockets, light reddish brown & light gray	7	18		29						
15		Poorly graded sand (SP), fine, dense, light brown	8	39								
			9	40		25	NP	NP		3.8		SP
20		Poorly graded sand (SP), fine to medium, dense, light brown	10	42								
			11	47								
25			12	24								
		Poorly graded sand (SP), fine to medium, firm, light brown, trace coarse sand near 27'	13	27		24	NP	NP		4.7		SP
30			14	15								
			15	19								
35			16	44								
		Poorly graded sand (SP), fine to medium, dense, light brown	17	50		23	NP	NP		3.2		
40			18	35								
			19	38								
45		Poorly graded sand (SP), fine to medium, firm, light brown w/ yellowish red clayey sand lenses	20	15								
			21	16								
50		B.T. @ 50 FT										
55												
60												
65												

NOTE: The stratification lines shown represent the approximate boundary between soil types and the transition may be gradual. The groundwater level stated is for conditions at the time of boring and the level may fluctuate large amounts for other conditions or seasons.

Reviewed By:

MOD DEEP BORING LOG W/O NC VALUES 19-103 ESLAVA CREEK FORCE MAIN.GPJ GETI AL GDT 7/24/19

REVISION

McCrory Williams INCORPORATED
Engineers Surveyors

3207 INTERNATIONAL DR., SUITE G
MOBILE, ALABAMA
36606
PHONE: (251) 476-4720
FAX: (251) 476-4721
EMAIL: mail@mcwinc.com

M5712-2650 ####

ESLAVA CREEK FORCE MAIN REPLACEMENT

BORING LOGS

BOARD OF WATER AND SEWER COMMISSIONERS OF THE CITY OF MOBILE

SCALE:	DATE: 2019	DRAWN BY: AKE	APPROVED BY: WEW	SHEET 16E OF 19

PROJECT NAME: MAWSS ESLAVA CREEK FORCE MAIN

G.E.T. PROJ. NUMBER: 19-103

PROJECT LOCATION: MOBILE, ALABAMA

DRILL RIG: SIMCO 2400

DRILL METHOD: MUD ROTARY

DRILL CREW: SW,JH, WM(LOGGER)

DATE DRILLED: 4/2/19

BORING DEPTH: 65 FT.

BORING ELEV.:

DATUM:

WATER DEPTH: 7 FT. measured 4-17-19

REMARKS:

GEOTECHNICAL ENGINEERING TESTING, INC.

BORING NUMBER: P3-6

BORING LOCATION: SEE AERIAL IMAGE

DEPTH IN FEET	LOG	DESCRIPTION	SAMPLE NO.	S.P.T. N_f	S.P.T. N_c	W.C. %	ATTERBERG LIMITS L.L.	ATTERBERG LIMITS P.I.	DRY UNIT WT. pcf	% MINUS #200	SHEAR STRENGTH tsf	UNIFIED CLASS
0		Poorly graded sand (SP), fine to coarse, firm, dark brown	1	10								
			2	6		23						
5		Clayey sand (SC), fine, loose, dark gray, trace organics										
			3	5								
10												
			4	13								
15												
			5	15		25						
20												
			6	38		24	NP	NP		3.9		
25												
		Poorly graded sand (SP), fine to medium, firm to dense, light brown	7	43								
30			8	22		24	NP	NP		4.4		SP
			9	27								
35			10	34								
			11	39		24	NP	NP		2.8		
40			12	30								
			13	34		25	NP	NP		3.3		SP
45			14	49								
		Poorly graded sand (SP), fine to coarse, dense to very dense, light brown	15	54								
50			16	51								
		Poorly graded sand (SP), fine to medium, very dense, light grayish brown, trace coarse sand & fine gravel near 54'	17	56								
55			18	31		17	NP	NP		3.2		
		Poorly graded sand (SP), fine to medium, dense, light reddish brown	19	34								
60			20	51								
		Poorly graded sand (SP), fine to coarse, very dense, light reddish brown, trace of fine gravel	21	65								
65		B.T. @ 65 FT										

NOTE: The stratification lines shown represent the approximate boundary between soil types and the transition may be gradual. The groundwater level stated is for conditions at the time of boring and the level may fluctuate large amounts for other conditions or seasons.

Reviewed By:

MOD DEEP BORING LOG WO NC VALUES 19-103 ESLAVA CREEK FORCE MAIN.GPJ GETI AL.GDT 7/24/19

PROJECT NAME: MAWSS ESLAVA CREEK FORCE MAIN

G.E.T. PROJ. NUMBER: 19-103

PROJECT LOCATION: MOBILE, ALABAMA

DRILL RIG: SIMCO 2400

DRILL METHOD: MUD ROTARY

DRILL CREW: SW,JH, CS(LOGGER)

DATE DRILLED: 4/8/19

BORING DEPTH: 65 FT.

BORING ELEV.:

DATUM:

WATER DEPTH: 4 FT. measured 4-17-19

REMARKS:

GEOTECHNICAL ENGINEERING TESTING, INC.

BORING NUMBER: P3-5

BORING LOCATION: SEE AERIAL IMAGE

DEPTH IN FEET	LOG	DESCRIPTION	SAMPLE NO.	S.P.T. N_f	S.P.T. N_c	W.C. %	ATTERBERG LIMITS L.L.	ATTERBERG LIMITS P.I.	DRY UNIT WT. pcf	% MINUS #200	SHEAR STRENGTH tsf	UNIFIED CLASS
0		Silty sand (SM), fine, loose, brown & dark gray, w/ grass roots & w/ trace fine gravel	1	6								
		Poorly graded sand (SP), fine, loose, brown & gray, w/ trace fine gravel	2	5		26	NP	NP		12.7		SM
5												
		Poorly graded sand (SP), fine to medium, firm, brown & gray, w/ small silty sand pockets	3	14		25				24.8		
10												
			4	5		85	136	86				
15		Lean clay (CL), medium consistency, dark gray, w/ organics										
			5	4		111	149	106				
20												
			6	4		31						
25		Silty clay (CL-ML), soft, gray & yellowish red										
			7	3		30						
30			8	36		21	NP	NP		5.5		SP-SM
			9	35								
35			10	26								
			11	29								
40			12	26		20				4.7		SP
			13	26								
45			14	32								
		Poorly graded sand (SP), fine to medium, firm to dense, light brown, w/ trace fine gravel near 55'	15	28								
50			16	27		21	NP	NP		3.9		SP
			17	30								
55			18	30								
			19	25								
60			20	25		20						
			21	30								
65		B.T. @ 65 FT										

NOTE: The stratification lines shown represent the approximate boundary between soil types and the transition may be gradual. The groundwater level stated is for conditions at the time of boring and the level may fluctuate large amounts for other conditions or seasons.

Reviewed By:

MOD DEEP BORING LOG WO NC VALUES 19-103 ESLAVA CREEK FORCE MAIN.GPJ GETI AL.GDT 7/24/19

REVISION

McCrory Williams INCORPORATED
Engineers Surveyors

3207 INTERNATIONAL DR., SUITE G
MOBILE, ALABAMA
36606
PHONE: (251) 476-4720
FAX: (251) 476-4721
EMAIL: mail@mcwinc.com

M5712-2650 ####

ESLAVA CREEK FORCE MAIN REPLACEMENT

BORING LOGS

BOARD OF WATER AND SEWER COMMISSIONERS OF THE CITY OF MOBILE

SCALE:	DATE: 2019	DRAWN BY: AKE	APPROVED BY: WEW	SHEET 16F OF 19

PROJECT NAME: MAWSS ESLAVA CREEK FORCE MAIN

G.E.T. PROJ. NUMBER: 19-103

PROJECT LOCATION: MOBILE, ALABAMA

DRILL RIG: SIMCO 2400

DRILL METHOD: MUD ROTARY

DRILL CREW: SW,JH, CS(LOGGER)

DATE DRILLED: 4/9/19

BORING DEPTH: 50 FT.

BORING ELEV.:

DATUM:

WATER DEPTH: 6.8 FT. measured 4-17-19

REMARKS:

GEOTECHNICAL ENGINEERING TESTING, INC.

BORING NUMBER: P3-3

BORING LOCATION: SEE AERIAL IMAGE

DEPTH IN FEET	LOG	DESCRIPTION	SAMPLE NO.	S.P.T. N_f	S.P.T. N_c	W.C. %	ATTERBERG LIMITS L.L.	ATTERBERG LIMITS P.I.	DRY UNIT WT. pcf	% MINUS #200	SHEAR STRENGTH tsf	UNIFIED CLASS
0		Silty sand (SM), fine, firm, dark brown, w/ grass roots	1	10								
		Poorly graded sand (SP), fine, loose to firm, light brown, w/ trace fine gravel	2	9								
5			3	11		9	NP	NP		7.8		SP-SM
		Silty sand (SM), fine, firm, dark brown, w/ some coarse sand & fine gravel	4	15								
10		Poorly graded sand (SP), fine to medium, firm, dark gray, w/ trace fine gravel, w/ free water	5	12								
			6	13		25	NP	NP		17.9		SM
15		Silty sand (SM), fine, firm, gray, w/ trace fine gravel	7	4								
		Fat clay (CH), medium consistency, gray	8	5		35	46	30				
20			9	4								
		Sitly clay (CL-ML), medium consistency, gray & yellowish red	10	5		33	30	13				
25		Silty sand (SM), fine, firm, light brown	11	22		28	NP	NP		14.7		SM
			12	20								
30		Poorly graded sand (SP), fine, firm, light brown	13	24		28	NP	NP		5.5		SP-SM
			14	23								
35			15	60								
			16	68								
40		Poorly graded sand (SP), fine to medium, very dense, light brown & light gray, w/ light gray silty sand layers below 45'	17	59		20	NP	NP		4.1		SP
			18	52								
45			19	61								
			20	55								
50		B.T. @ 50 FT										
55												
60												
65												

NOTE: The stratification lines shown represent the approximate boundary between soil types and the transition may be gradual. The groundwater level stated is for conditions at the time of boring and the level may fluctuate large amounts for other conditions or seasons.

Reviewed By:

MOD DEEP BORING LOG W/O NC VALUES 19-103 ESLAVA CREEK FORCE MAIN.GPJ GETI_AL.GDT 7/24/19

PROJECT NAME: MAWSS ESLAVA CREEK FORCE MAIN

G.E.T. PROJ. NUMBER: 19-103

PROJECT LOCATION: MOBILE, ALABAMA

DRILL RIG: SIMCO 2400

DRILL METHOD: MUD ROTARY

DRILL CREW: SW,JH, CS(LOGGER)

DATE DRILLED: 4/10/19

BORING DEPTH: 40 FT.

BORING ELEV.:

DATUM:

WATER DEPTH: 8.6 FT. measured 4-17-19

REMARKS:

GEOTECHNICAL ENGINEERING TESTING, INC.

BORING NUMBER: P3-2

BORING LOCATION: SEE AERIAL IMAGE

DEPTH IN FEET	LOG	DESCRIPTION	SAMPLE NO.	S.P.T. N_f	S.P.T. N_c	W.C. %	ATTERBERG LIMITS L.L.	ATTERBERG LIMITS P.I.	DRY UNIT WT. pcf	% MINUS #200	SHEAR STRENGTH tsf	UNIFIED CLASS
0		Silty sand (SM), fine, firm, dark reddish brown to light brown, w/ grass roots near surface	1	16								
			2	12								
5			3	18		7	NP	NP		4.4		
		Poorly graded sand (SP), fine, firm, light brown	4	20								
10			5	20								
			6	4		26	NP	NP		19.0		SM
15			7	5								
		Poorly graded sand (SP), fine, loose to very loose, gray	8	2								
20			9	3		28	NP	NP		9.6		
		Mixture of fine sand w/ fine gravel & wood and sandy clay (SP/CLS), gray & yellowish red	10	7		33				53.3		
25		Silt (ML), medium consistency, light brown, w/ clay	11	6		35				47.5		
		Poorly graded sand (SP), fine, loose, light brown, w/ clay pockets	12	5		27				29.7		
30			13	29								
		Poorly graded sand (SP), fine to medium, firm, light brown	14	27								
35			15	45		35						
		Poorly graded sand (SP), fine to medium, dense, light brown, w/ pockets of gray clayey sand w/ wood	16	44								
40		B.T. @ 40 FT										
45												
50												
55												
60												
65												

NOTE: The stratification lines shown represent the approximate boundary between soil types and the transition may be gradual. The groundwater level stated is for conditions at the time of boring and the level may fluctuate large amounts for other conditions or seasons.

Reviewed By:

MOD DEEP BORING LOG W/O NC VALUES 19-103 ESLAVA CREEK FORCE MAIN.GPJ GETI_AL.GDT 7/24/19

REVISION

McCrory Williams
INCORPORATED
Engineers Surveyors

3207 INTERNATIONAL DR., SUITE G
MOBILE, ALABAMA
36606
PHONE: (251) 476-4720
FAX: (251) 476-4721
EMAIL: mail@mcwinc.com

M5712-2650
####

ESLAVA CREEK FORCE MAIN REPLACEMENT

BORING LOGS

BOARD OF WATER AND SEWER COMMISSIONERS OF THE CITY OF MOBILE

SCALE:	DATE: 2019	DRAWN BY: AKE	APPROVED BY: WEW	SHEET 16G OF 19

PROJECT NAME: MAWSS ESLAVA CREEK FORCE MAIN

G.E.T. PROJ. NUMBER: 19-103

PROJECT LOCATION: MOBILE, ALABAMA

DRILL RIG: SIMCO 2400

DRILL METHOD: MUD ROTARY

DRILL CREW: SW,JH, CS(LOGGER)

DATE DRILLED: 4/10/19

BORING DEPTH: 40 FT.

BORING ELEV.:

DATUM:

WATER DEPTH: 8.5 FT. measured 4-17-19

REMARKS:

GEOTECHNICAL ENGINEERING TESTING, INC.

BORING NUMBER: P3-1

BORING LOCATION: SEE AERIAL IMAGE

DEPTH IN FEET	LOG	DESCRIPTION	SAMPLE NO.	S.P.T. N_f	S.P.T. N_c	W.C. %	ATTERBERG LIMITS L.L.	ATTERBERG LIMITS P.I.	DRY UNIT WT. pcf	% MINUS #200	SHEAR STRENGTH tsf	UNIFIED CLASS
0		Silty sand (SM), fine, firm, brown, w/ grass roots near surface & w/ trace fine gravel	1	15								
			2	12		11	NP	NP		13.0		SM
5			3	17								
		Poorly graded sand (SP), fine to medium, firm, brown	4	21								
10			5	18		23	NP	NP		5.8		SP-SM
			6	3								
15		Poorly graded sand (SP), fine to medium, very loose, w/ silt & w/ small shell fragments	7	4								
			8	4		31	NP	NP		10.7		SP-SM
20			9	4								
		Mixture of silty sand & silty clay (SM/CL-ML), dark gray & yellowish red, w/ fine gravel	10	7		31				44.1		
25		Silty clay (CL-ML), medium consistency, light gray & light brown	11	6		31	31	14		68.4		CL
		Poorly graded sand (SP), fine, loose, light brown, w/ small gray clay pockets	12	6		29				25.9		
30			13	28								
		Poorly graded sand (SP), fine to medium, firm, light brown	14	27		24	NP	NP		4.8		
35			15	41								
		Poorly graded sand (SP), fine to medium, dense, light brown & light gray, w/ silty sand pockets & w/ trace fine gravel	16	37								
40		B.T. @ 40 FT										
45												
50												
55												
60												
65												

NOTE: The stratification lines shown represent the approximate boundary between soil types and the transition may be gradual. The groundwater level stated is for conditions at the time of boring and the level may fluctuate large amounts for other conditions or seasons.

Reviewed By:

MOD DEEP BORING LOG W/O NC VALUES 19-103 ESLAVA CREEK FORCE MAIN.GPJ GETI AL.GDT 7/24/19

PROJECT NAME: MAWSS ESLAVA CREEK FORCE MAIN

G.E.T. PROJ. NUMBER: 19-103

PROJECT LOCATION: MOBILE, ALABAMA

DRILL RIG: SIMCO 2400

DRILL METHOD: MUD ROTARY

DRILL CREW: SW,JH, CS(LOGGER)

DATE DRILLED: 4/10/19

BORING DEPTH: 40 FT.

BORING ELEV.:

DATUM:

WATER DEPTH: 8.5 FT. measured 4-17-19

REMARKS:

GEOTECHNICAL ENGINEERING TESTING, INC.

BORING NUMBER: P3-1

BORING LOCATION: SEE AERIAL IMAGE

DEPTH IN FEET	LOG	DESCRIPTION	SAMPLE NO.	S.P.T. N_f	S.P.T. N_c	W.C. %	ATTERBERG LIMITS L.L.	ATTERBERG LIMITS P.I.	DRY UNIT WT. pcf	% MINUS #200	SHEAR STRENGTH tsf	UNIFIED CLASS
0		Silty sand (SM), fine, firm, brown, w/ grass roots near surface & w/ trace fine gravel	1	15								
			2	12		11	NP	NP		13.0		SM
5			3	17								
		Poorly graded sand (SP), fine to medium, firm, brown	4	21								
10			5	18		23	NP	NP		5.8		SP-SM
			6	3								
15		Poorly graded sand (SP), fine to medium, very loose, w/ silt & w/ small shell fragments	7	4								
			8	4		31	NP	NP		10.7		SP-SM
20			9	4								
		Mixture of silty sand & silty clay (SM/CL-ML), dark gray & yellowish red, w/ fine gravel	10	7		31				44.1		
25		Silty clay (CL-ML), medium consistency, light gray & light brown	11	6		31	31	14		68.4		CL
		Poorly graded sand (SP), fine, loose, light brown, w/ small gray clay pockets	12	6		29				25.9		
30			13	28								
		Poorly graded sand (SP), fine to medium, firm, light brown	14	27		24	NP	NP		4.8		
35			15	41								
		Poorly graded sand (SP), fine to medium, dense, light brown & light gray, w/ silty sand pockets & w/ trace fine gravel	16	37								
40		B.T. @ 40 FT										
45												
50												
55												
60												
65												

NOTE: The stratification lines shown represent the approximate boundary between soil types and the transition may be gradual. The groundwater level stated is for conditions at the time of boring and the level may fluctuate large amounts for other conditions or seasons.

Reviewed By:

MOD DEEP BORING LOG W/O NC VALUES 19-103 ESLAVA CREEK FORCE MAIN.GPJ GETI AL.GDT 7/24/19

REVISION

McCrory Williams INCORPORATED
Engineers Surveyors

3207 INTERNATIONAL DR., SUITE G
MOBILE, ALABAMA
36606
PHONE: (251) 476-4720
FAX: (251) 476-4721
EMAIL: mail@mcwinc.com

M5712-2650 ####

ESLAVA CREEK FORCE MAIN REPLACEMENT

BORING LOGS

BOARD OF WATER AND SEWER COMMISSIONERS OF THE CITY OF MOBILE

SCALE:	DATE: 2019	DRAWN BY: AKE	APPROVED BY: WEW	SHEET 16H OF 19

PROJECT NAME: MAWSS ESLAVA CREEK FORCE MAIN

G.E.T. PROJ. NUMBER: 19-103

PROJECT LOCATION: MOBILE, ALABAMA

DRILL RIG: SIMCO 2400

DRILL METHOD: MUD ROTARY

DRILL CREW: SW,JH, CS(LOGGER)

DATE DRILLED: 4/16/19

BORING DEPTH: 65 FT.

BORING ELEV.:

DATUM:

WATER DEPTH: 11.5 FT. measured 4-17-19

REMARKS:

GEOTECHNICAL ENGINEERING TESTING, INC.

BORING NUMBER: P3-B

BORING LOCATION: SEE AERIAL IMAGE

DEPTH IN FEET	LOG	DESCRIPTION	SAMPLE NO.	S.P.T. N_f	S.P.T. N_c	W.C. %	ATTERBERG LIMITS L.L.	ATTERBERG LIMITS P.I.	DRY UNIT WT. pcf	% MINUS #200	SHEAR STRENGTH tsf	UNIFIED CLASS
0		4" crushed aggregate	1	45								
		Mixture of fine to medium sand and silty sand (SP/SM), dense, dark brown & red	2	28								
5												
10		Poorly graded sand (SP), fine to coarse, firm to loose, light brown, w/ fine gravel & w/ clay lense	3	9		20	NP	NP		3.8		SP
15			4	7								
20			5	13		24	NP	NP		2.7		SP
25			6	7								
		Poorly graded sand (SP), fine to medium, firm to loose to firm, light brown & light grayish brown, trace coarse sand & fine gravel	6A	22								
30			7	20								
			8	24		23	NP	NP		4.4		SP
35			9	23								
			10	20								
40			11	22								
		Poorly graded sand (SP), fine to coarse, firm , light brown, w/ trace fine gravel	12	24		22	NP	NP		3.5		SP
45			13	28								
			14	40								
50			15	35								
		Poorly graded sand (SP), fine to medium, firm to dense, light brown, w/ gray clayey sand lenses	16	45		24				10.6		
55			17	36								
			18	38								
60			19	40								
		Poorly graded sand (SP), fine to medium, dense, light brown	20	38		22	NP	NP		1.7		
65			21	32								

B.T. @ 65 FT

NOTE: The stratification lines shown represent the approximate boundary between soil types and the transition may be gradual. The groundwater level stated is for conditions at the time of boring and the level may fluctuate large amounts for other conditions or seasons.

Reviewed By:

MOD DEEP BORING LOG W/O NC VALUES 19-103 ESLAVA CREEK FORCE MAIN.GPJ GETI_AL.GDT 7/24/19

PROJECT NAME: MAWSS ESLAVA CREEK FORCE MAIN

G.E.T. PROJ. NUMBER: 19-103

PROJECT LOCATION: MOBILE, ALABAMA

DRILL RIG: SIMCO 2400

DRILL METHOD: MUD ROTARY

DRILL CREW: SW, CS(LOGGER)

DATE DRILLED: 4/17/19

BORING DEPTH: 65 FT.

BORING ELEV.:

DATUM:

WATER DEPTH:

REMARKS:

GEOTECHNICAL ENGINEERING TESTING, INC.

BORING NUMBER: P3-A

BORING LOCATION: SEE AERIAL IMAGE

DEPTH IN FEET	LOG	DESCRIPTION	SAMPLE NO.	S.P.T. N_f	S.P.T. N_c	W.C. %	ATTERBERG LIMITS L.L.	ATTERBERG LIMITS P.I.	DRY UNIT WT. pcf	% MINUS #200	SHEAR STRENGTH tsf	UNIFIED CLASS
0		Silty sand (SM), fine, very loose, dark gray & brown, w/ roots	1	2								
5		Silty sand (SM), fine, loose gray	2	4		27	NP	NP		18.5		SM
10		Lean clay (CL), medium consistency, gray, w/ silt lenses	3	6		50	25	8				
15		Silty clayey sand (SC-SM), fine, very loose, dark gray, w/ shell fragments	4	2		43				42.2		
20			5	5		29	NP	NP		10.2		SP-SM
25			6	6								
		Poorly graded sand (SP), fine, loose to very loose, gray, free water	6A	2								
30			7	3		28	NP	NP		6.0		SP-SM
			8	2								
35			9	1		26	NP	NP		6.4		SP-SM
			10	15								
		Poorly graded sand (SP), fine, firm, gray, w/ trace sandstone	11	13								
40			12	34		25	NP	NP		9.4		SP-SM
45			13	35								
			14	33								
50			15	33		25	NP	NP		5.5		
		Poorly graded sand (SP), fine, dense, light gray & light brown	16	45								
55			17	44								
			18	37								
60			19	35		24						
			20	40								
65			21	40								

B.T. @ 65 FT

NOTE: The stratification lines shown represent the approximate boundary between soil types and the transition may be gradual. The groundwater level stated is for conditions at the time of boring and the level may fluctuate large amounts for other conditions or seasons.

Reviewed By:

MOD DEEP BORING LOG W/O NC VALUES 19-103 ESLAVA CREEK FORCE MAIN.GPJ GETI_AL.GDT 7/24/19

REVISION

McCrory Williams INCORPORATED Engineers Surveyors

3207 INTERNATIONAL DR., SUITE G
MOBILE, ALABAMA
36606
PHONE: (251) 476-4720
FAX: (251) 476-4721
EMAIL: mail@mcwinc.com

M5712-2650 ####

ESLAVA CREEK FORCE MAIN REPLACEMENT

BORING LOGS

BOARD OF WATER AND SEWER COMMISSIONERS OF THE CITY OF MOBILE

SCALE:	DATE: 2019	DRAWN BY: AKE	APPROVED BY: WEW	SHEET 16 OF 19

FITTINGS COORDINATE TABLE

CONTROL POINT	DESCRIPTION	NORTHING	EASTING	℄ ELEVATION	SHEET NO.
FM-9	36" 22.5° DI BEND				
FM-10	36" 45° DI BEND				
FM-11	36" 11.25° DI BEND				
FM-11A	36" 22.5° DI BEND				
FM-11B	AIR/VAC RELEASE VALVE				
FM-11C	36" 11.25° DI BEND				
FM-11D	36" 11.25° DI BEND				
FM-11E	36" 11.25° DI BEND				
FM-12	36" 11.25° DI BEND				
FM-15	36" 11.25° DI BEND				
FM-16	36" 45° DI BEND				
FM-17	36" 45° DI BEND				
FM-18	36" 22.5° DI BEND				
FM-19	36" 22.5° DI BEND				
FM-20	36" 22.5° DI BEND				
FM-21	36" 22.5° DI BEND				
FM-22	36" 22.5° DI BEND				
FM-23	36" 22.5° DI BEND				
FM-24	36" 22.5° DI BEND				
FM-25	36" 22.5° DI BEND				
FM-26	AIR/VAC RELEASE VALVE				
FM-27	AIR/VAC RELEASE VALVE				
FM-28	36" 22.5° DI BEND				
FM-29	36" 22.5° DI BEND				
FM-30	36" 45° DI BEND				
FM-31	36" 45° DI BEND				
FM-32	36" 11.25° DI BEND				
FM-34	36" 22.5° DI BEND				
FM-35	AIR/VAC RELEASE VALVE				
FM-36	36" 45° DI BEND				
FM-37	36" 22.5° DI BEND				
FM-38	AIR/VAC RELEASE VALVE				
FM-39	36" 11.25° DI BEND				
FM-40	36" DI TEE				
FM-41	36" 22.5° DI BEND				
FM-42	36" 22.5° DI BEND				
FM-42A	AIR/VAC RELEASE VALVE				
FM-43	36" 11.25° DI BEND				
FM-44	36" 11.25° DI BEND				
FM-46	36" 45° DI BEND				
FM-47	36" 11.25° DI BEND				
FM-48	36" 11.25° DI BEND				
FM-49	36" 11.25° DI BEND				
FM-50	AIR/VAC RELEASE VALVE				
FM-50A	36" MJ SLEEVE				
FM-50B	36" MJ SLEEVE				
FM-51	36" 11.25° DI BEND				
FM-52	36" 11.25° DI BEND				
FM-53	AIR/VAC RELEASE VALVE				
FM-54	36" 11.25° DI BEND				
FM-55	36" 11.25° DI BEND				
FM-56	36" 11.25° DI BEND				

FITTINGS COORDINATE TABLE

CONTROL POINT	DESCRIPTION	NORTHING	EASTING	℄ ELEVATION	SHEET NO.
FM-57	36" 11.25° DI BEND				
FM-58	36" MJ SLEEVE				
FM-59	36" DI TEE				
FM-60	36" 22.5° DI BEND				
FM-61	36" 22.5° DI BEND				
FM-62	36" 45° DI BEND				
FM-63	36" 45° DI BEND				
FM-64	36" 45° DI BEND				
FM-65	AIR/VAC RELEASE VALVE				
FM-66	36" 45° DI BEND				
FM-67	36" 45° DI BEND				
FM-68	36" 22.5° DI BEND				
FM-69	36" 11.25° DI BEND				
FM-70	48"x48"x36" DI TEE				

NOTE: AS A REQUIREMENT FOR CONTRACTORS AS-BUILT DRAWINGS, THE X,Y,Z COORDINATES OF FITTINGS SHALL BE NOTED ON THIS SHEET.

NOTE: PAYMENT FOR THIS PIPELINE REFERENCES SHALL BE CONSIDERED AS A SUBSIDIARY ITEM OF WORK FOR GC-22 MOBILIZATION/DEMOBILIZATION.

McCrory Williams
INCORPORATED
Engineers Surveyors

3207 INTERNATIONAL DR., SUITE G
MOBILE, ALABAMA
36606
PHONE: (251) 476-4720
FAX: (251) 476-4721
EMAIL: mail@mcwinc.com

M5712-2650
####

REVISION

ESLAVA CREEK FORCE MAIN REPLACEMENT

FITTINGS COORDINATE TABLE

BOARD OF WATER AND SEWER COMMISSIONERS OF THE CITY OF MOBILE

SCALE: NOT TO SCALE	DATE: 2019	DRAWN BY: AKE	APPROVED BY: WEW	SHEET 17 OF 19

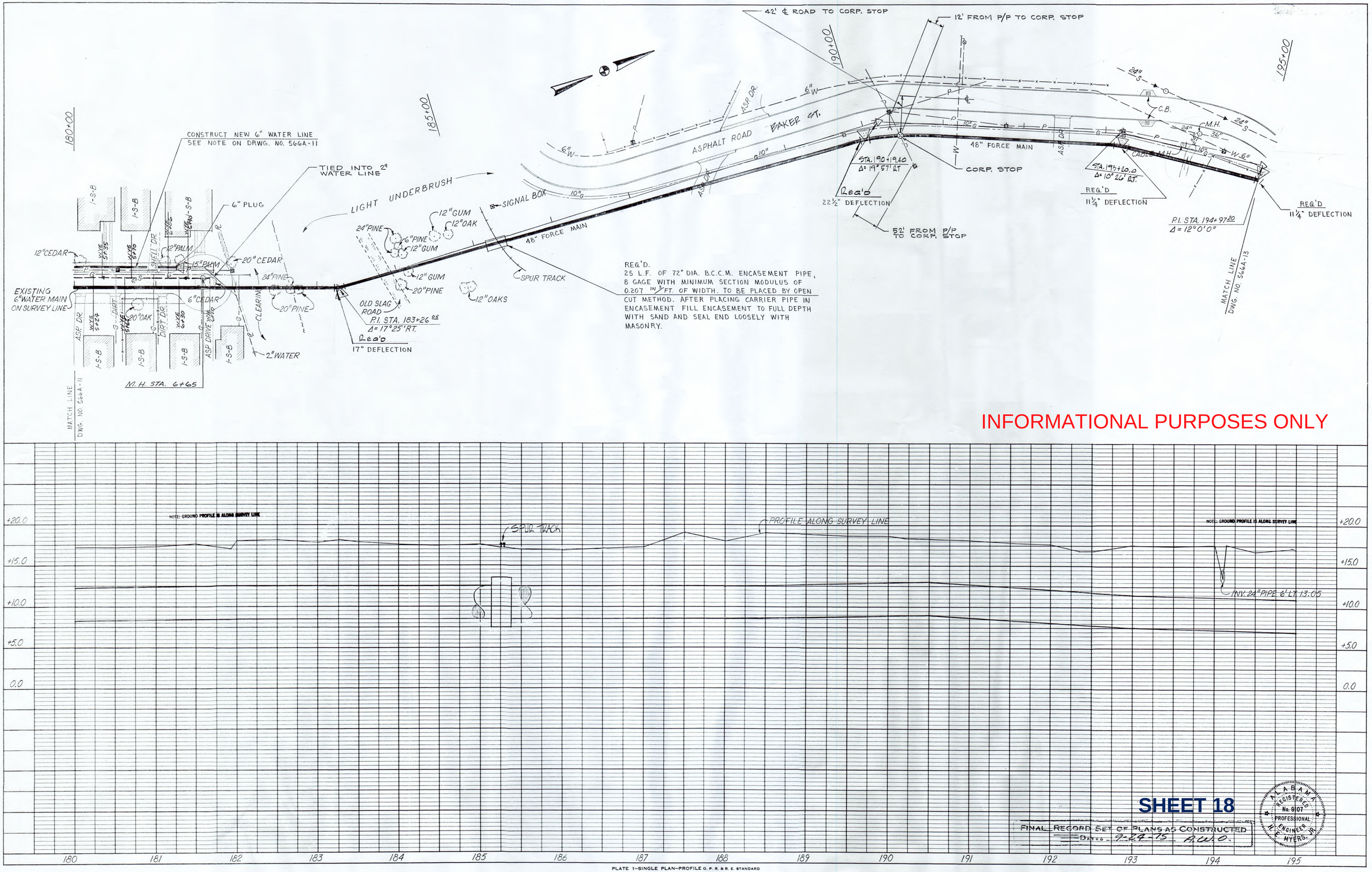

INFORMATIONAL PURPOSES ONLY

DRWG. NO.
566A-12

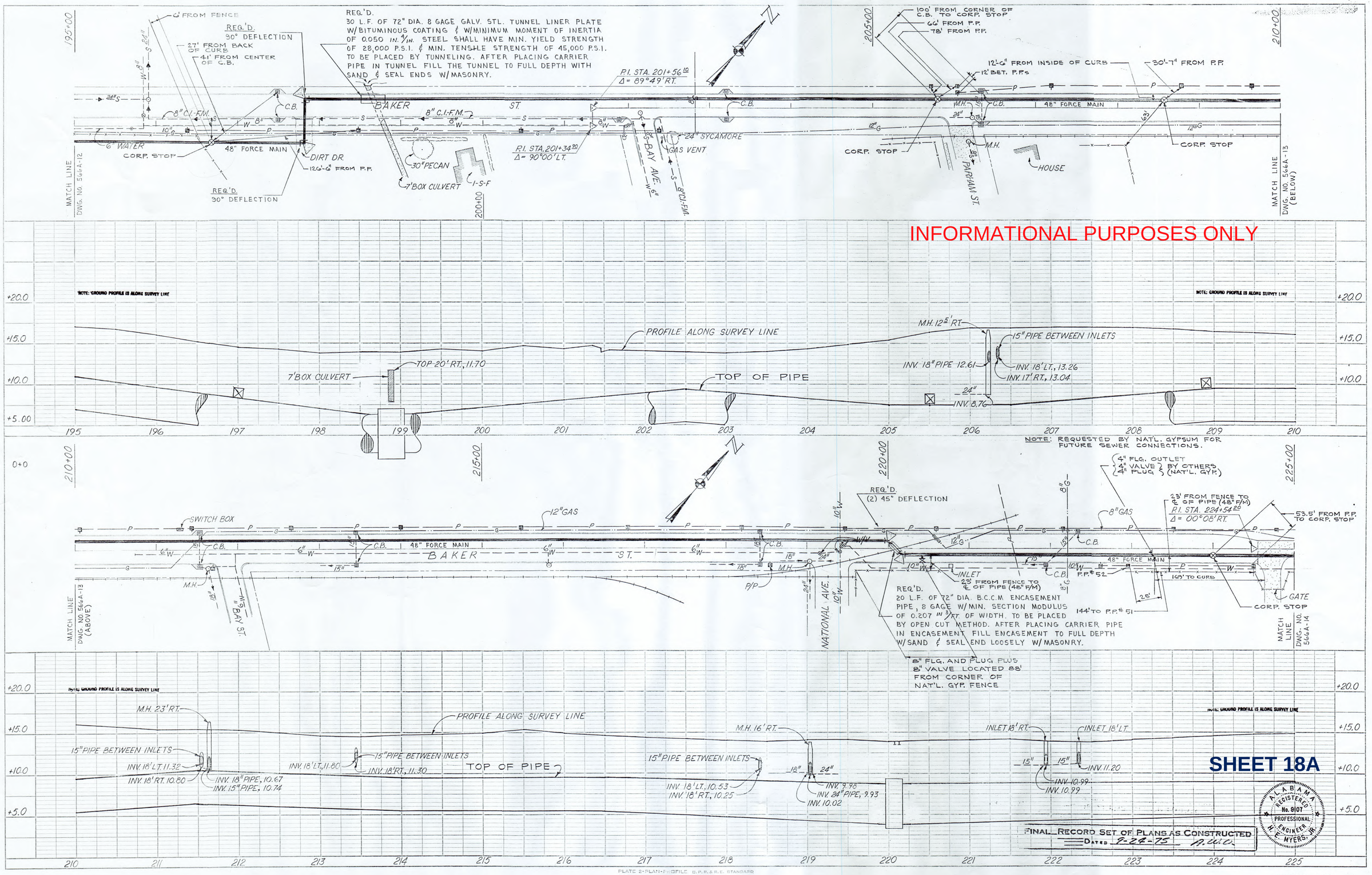

PLATE 2-PLAN-PROFILE C.P.R.&R.E. STANDARD
100% RAG PAPER-MADE AND PRINTED IN U.S.A.
EUGENE DIETZGEN CO.

DRWG. NO.
566A-13

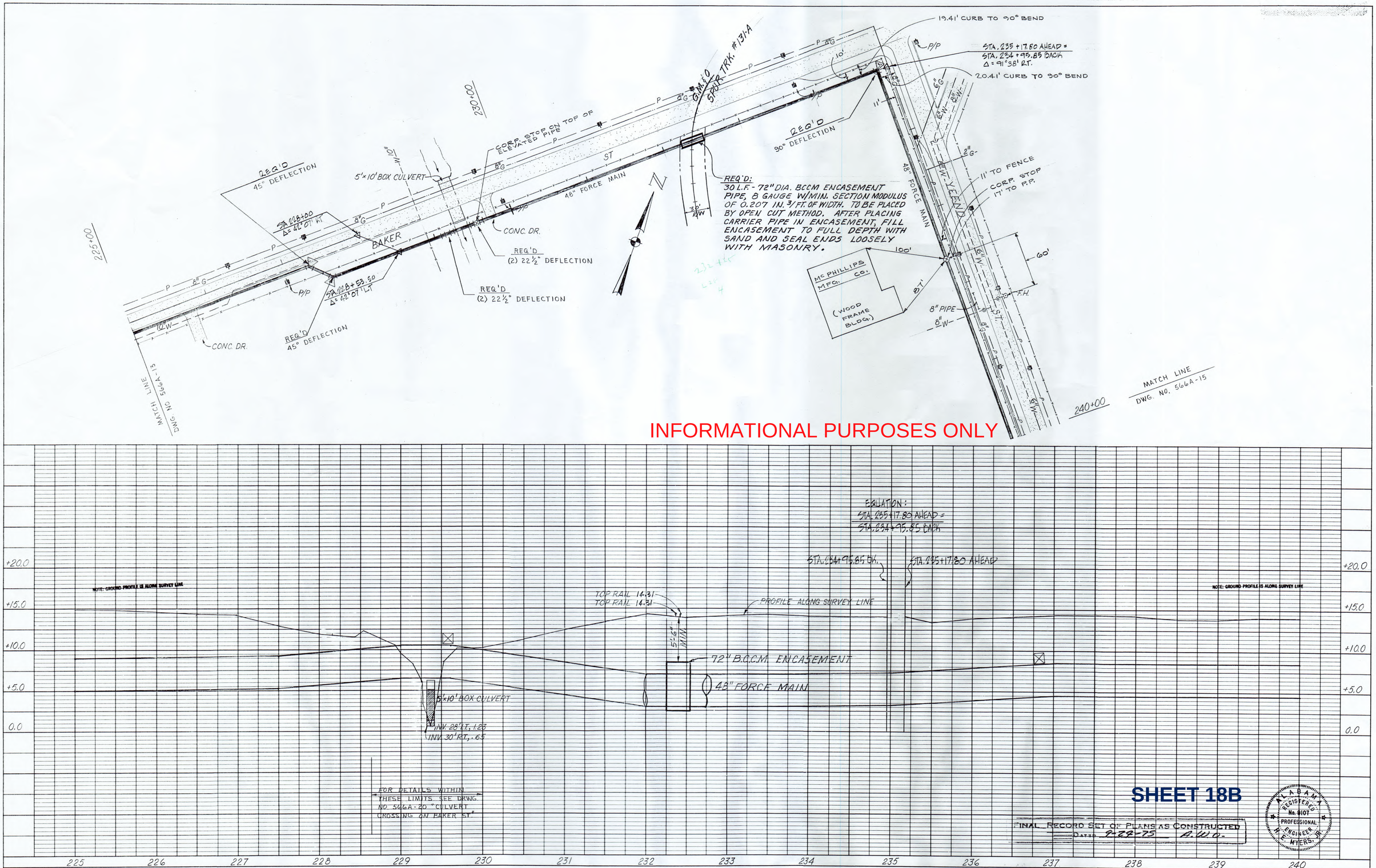

INFORMATIONAL PURPOSES ONLY

SHEET 18B

FINAL RECORD SET OF PLANS AS CONSTRUCTED
DATE 2-28-75 A.W.O.

ALABAMA REGISTERED No. 9107 PROFESSIONAL ENGINEER H. E. MYERS, JR.

PLAN: SURVEYED, PLOTTED, NOTE BOOK, ALIGNMENT CHECKED, R/W CHECKED, No.

PROFILE: SURVEYED, PLOTTED, NOTE BOOK, GRADES CHECKED, R. & L. NOTED, STRUCTURE INDICATIONS CHECKED, No.

BY | DATE

PLATE 1—SINGLE PLAN-PROFILE O. P. R. & R. E. STANDARD
L. L. RIDGWAY COMPANY, INC.
100% RAG — MADE IN U.S.A.

DRWG. NO.
566A-14

INFORMATIONAL PURPOSES ONLY

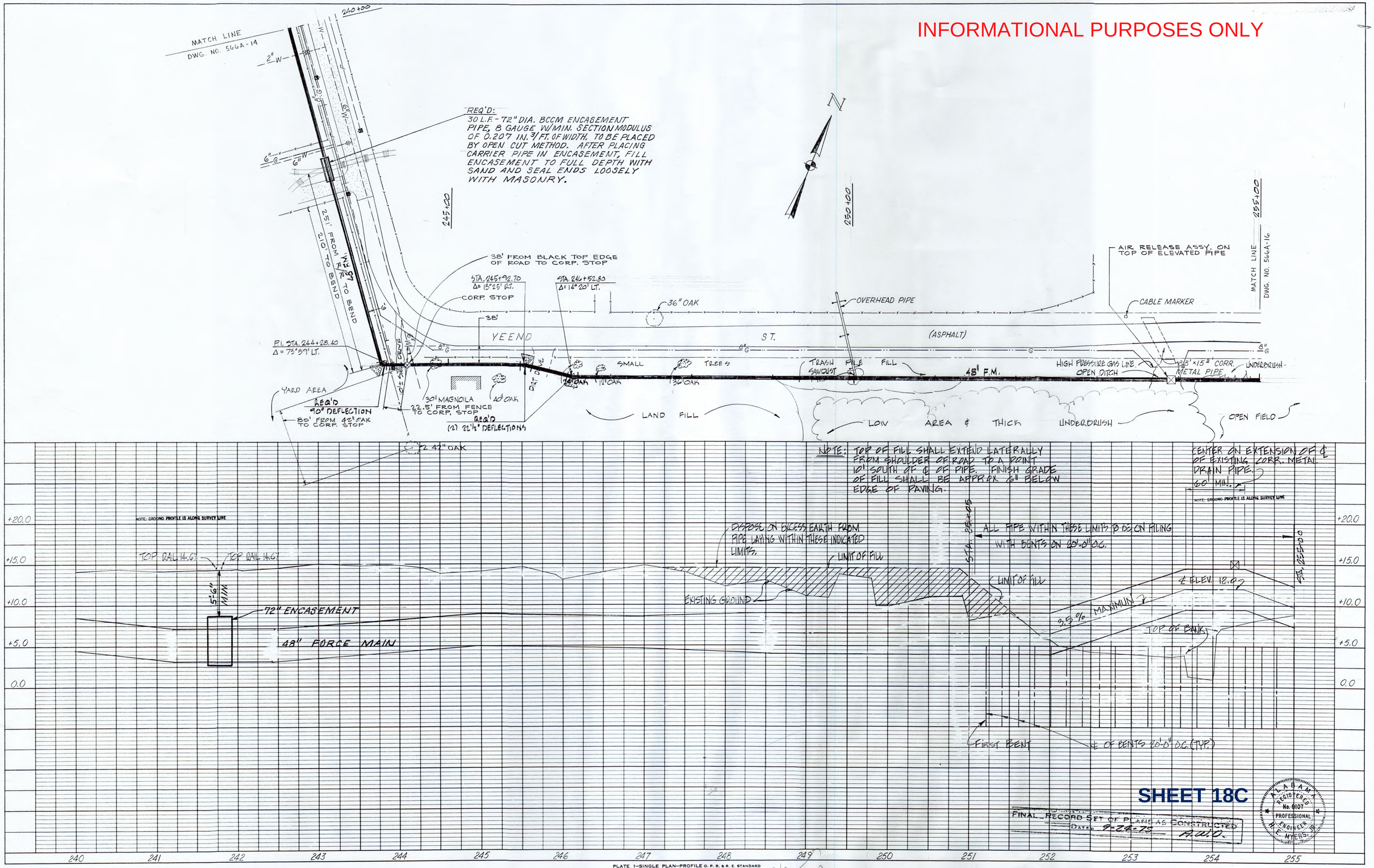

PLATE 1—SINGLE PLAN—PROFILE O. P. R. & R. E. STANDARD
L. L. RIDGWAY COMPANY, INC.
100% RAG — MADE IN U.S.A.

-10 3

DRWG. NO.
566A-15

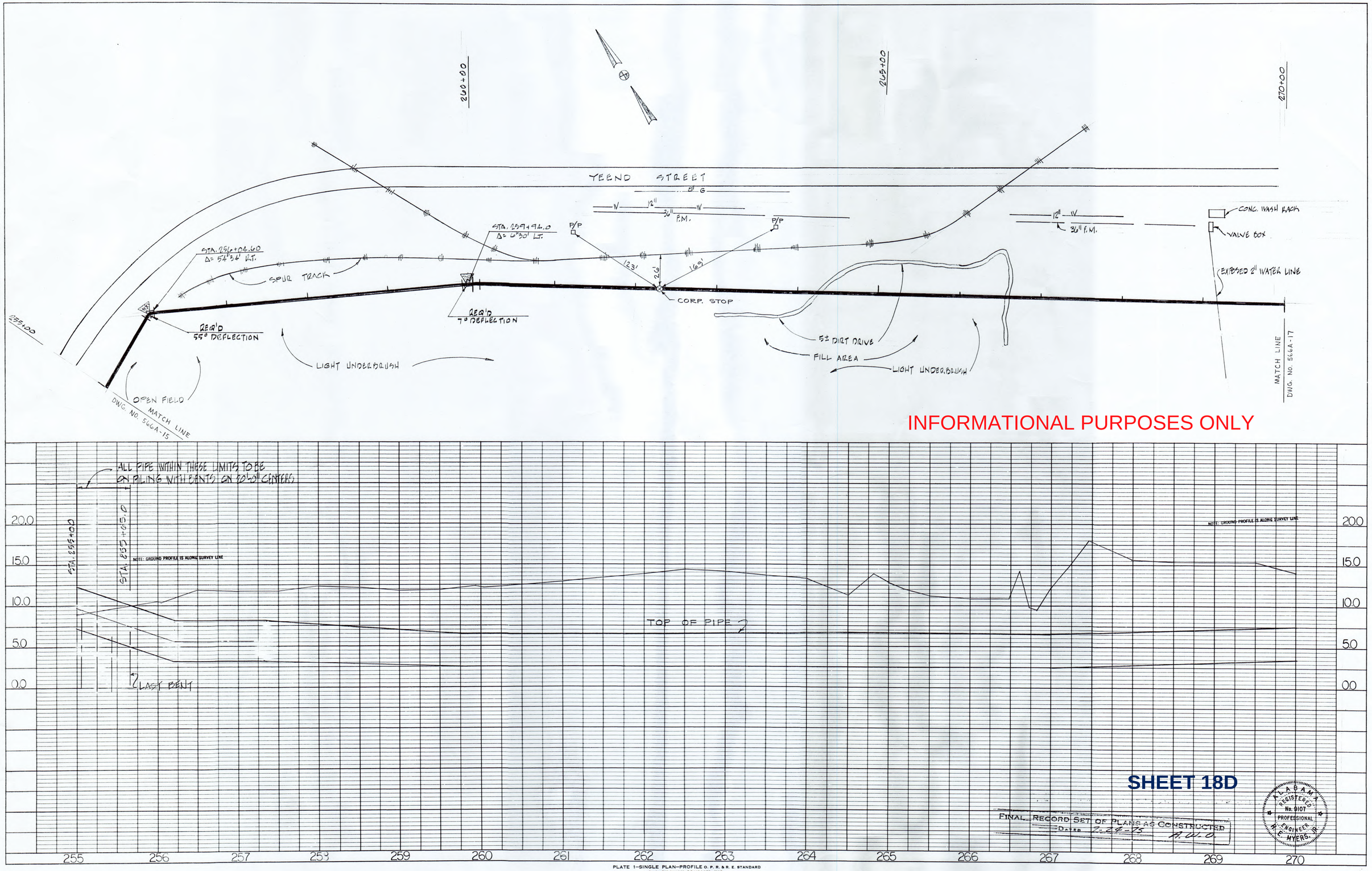

INFORMATIONAL PURPOSES ONLY

SHEET 18D

PLATE 1—SINGLE PLAN—PROFILE O. P. R. & R. E. STANDARD
L. L. RIDGWAY COMPANY, INC.
100% RAG — MADE IN U.S.A.

DRWG. NO.
566A-16

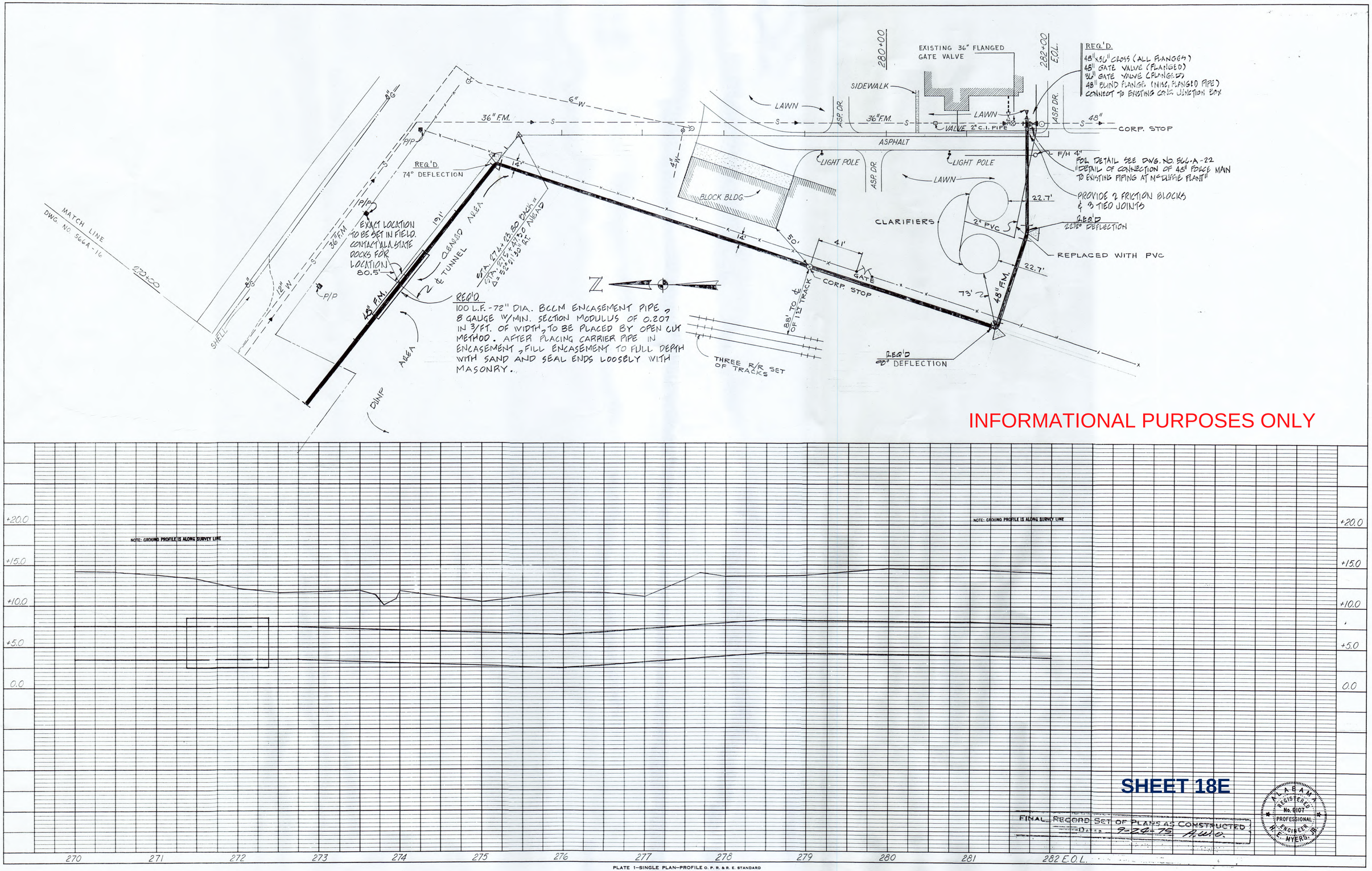

INFORMATIONAL PURPOSES ONLY

PLATE 1—SINGLE PLAN—PROFILE O. P. R. & R. E. STANDARD
L. L. RIDGWAY COMPANY, INC.
100% RAG — MADE IN U.S.A.

DRWG. NO.
566A-17

INFORMATIONAL PURPOSES ONLY

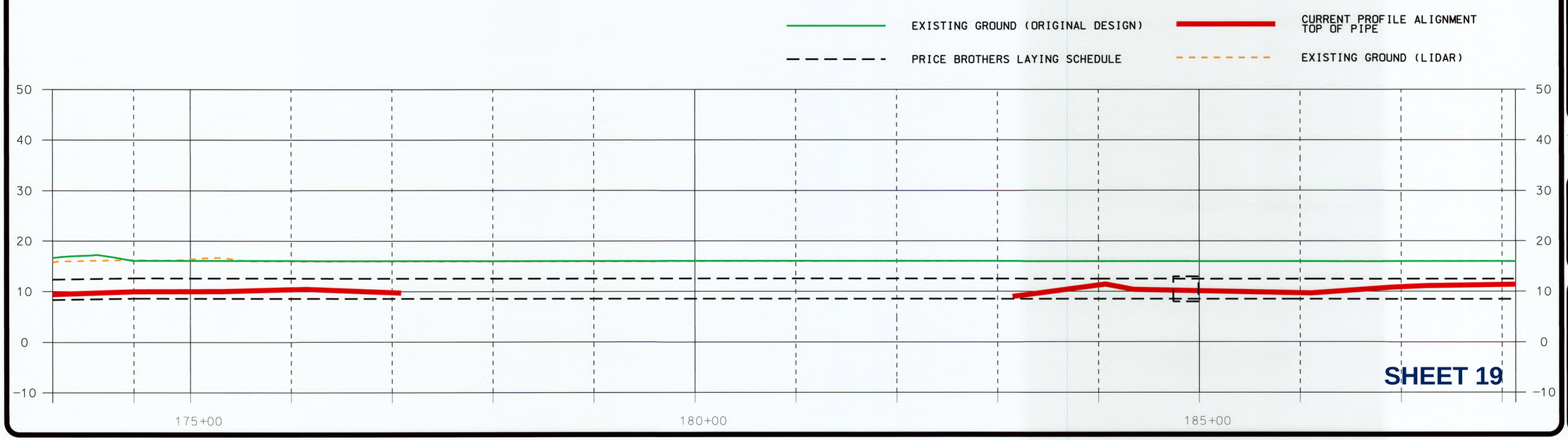

PROJECT NO.: 044424.06

DRAWING NO.: 12

NO.	DATE	DESCRIPTION	BY

REVISIONS

MAWSS MOBILE AREA WATER & SEWER SYSTEM

PROJECT NAME: HALLS MILL /ESLAVA CREEK FORCE MAIN O & M PROCEDURES

SHEET NAME: 48" FORCE MAIN STA:177+08 TO STA:191+58

VOLKERT

CERTIFICATION:

DATE:

DESIGNED: CHECKED:

DRAWN: CHECKED:

DATE: 4 / 15 / 12

PROJECT NO.: 044424.06

PLAN/PROFILE SHEET DRAWING NO.: 12

Sheet 12 of 19

INFORMATIONAL PURPOSES ONLY

EXISTING GROUND (ORIGINAL DESIGN)

CURRENT PROFILE ALIGNMENT TOP OF PIPE

PRICE BROTHERS LAYING SCHEDULE

EXISTING GROUND (LIDAR)

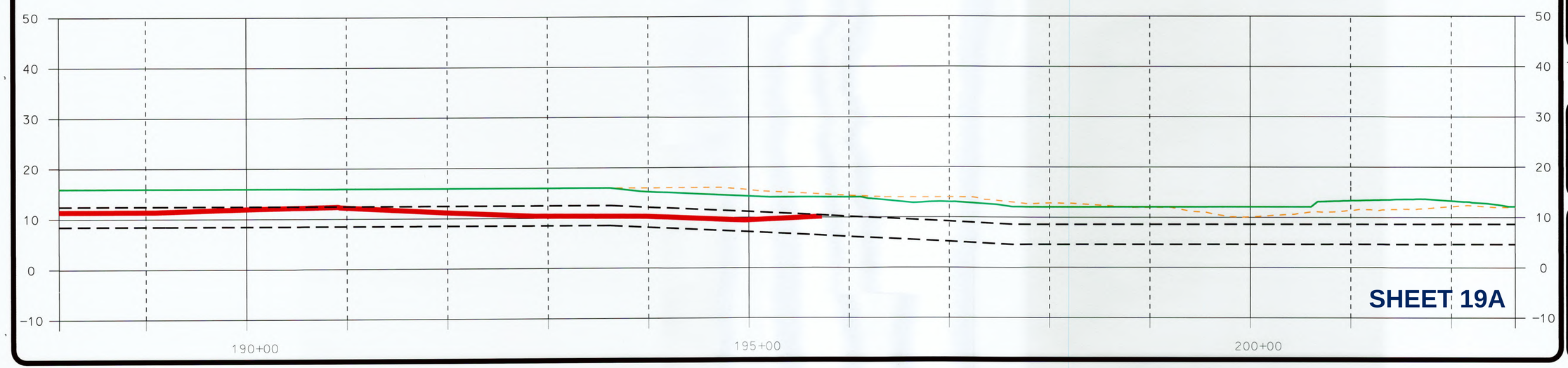

SHEET 19A

PROJECT NO.: 044424.06

DRAWING NO.: 13

NO.	DATE	DESCRIPTION	BY

REVISIONS

MAWSS MOBILE AREA WATER & SEWER SYSTEM

PROJECT NAME: HALLS MILL /ESLAVA CREEK FORCE MAIN O & M PROCEDURES

SHEET NAME: 48"FORCE MAIN STA:191+58 TO STA:206+08

VOLKERT

CERTIFICATION:

DATE:

DESIGNED: CHECKED:

DRAWN: CHECKED:

DATE: 4 / 15 / 12

PROJECT NO.: 044424.06

PLAN/PROFILE SHEET DRAWING NO.: 13

Sheet 13 Of 19

INFORMATIONAL PURPOSES ONLY

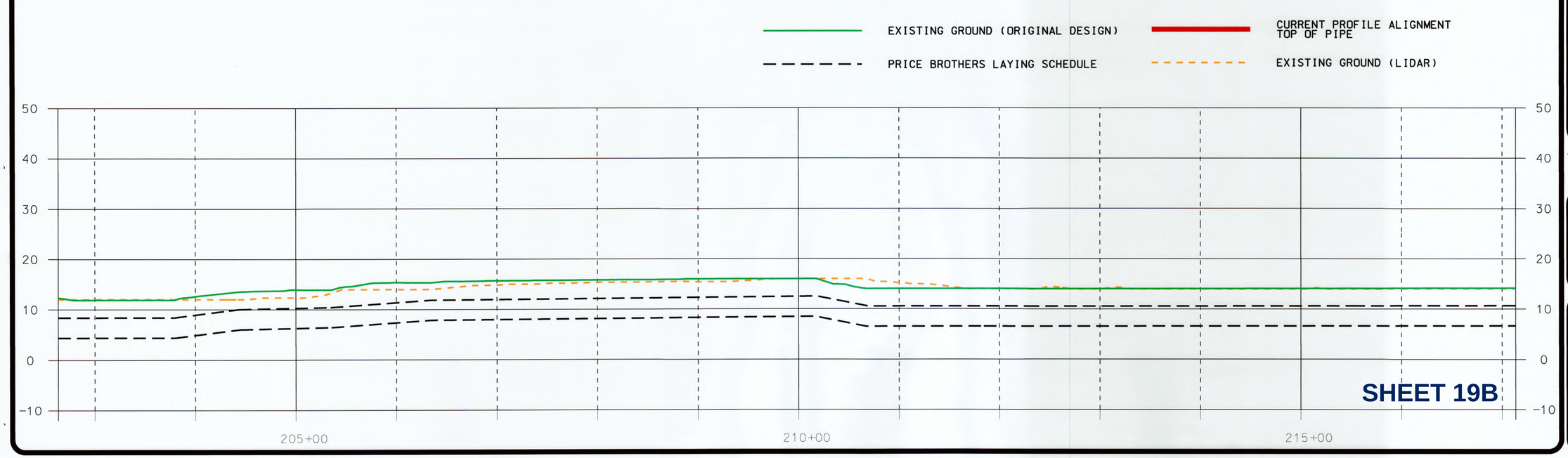

PROJECT NO.: 044424.06

DRAWING NO.: 14

NO.	DATE	DESCRIPTION	BY

REVISIONS

MAWSS
MOBILE AREA WATER & SEWER SYSTEM

PROJECT NAME: HALLS MILL / ESLAVA CREEK FORCE MAIN O & M PROCEDURES

SHEET NAME: 48" FORCE MAIN STA: 206+08 TO STA: 220+58

VOLKERT

CERTIFICATION:

DATE:

DESIGNED:	CHECKED:
DRAWN:	CHECKED:

DATE: 4 / 15 / 12

PROJECT NO.: 044424.06

PLAN/PROFILE SHEET DRAWING NO.: 14

Sheet 14 of 19

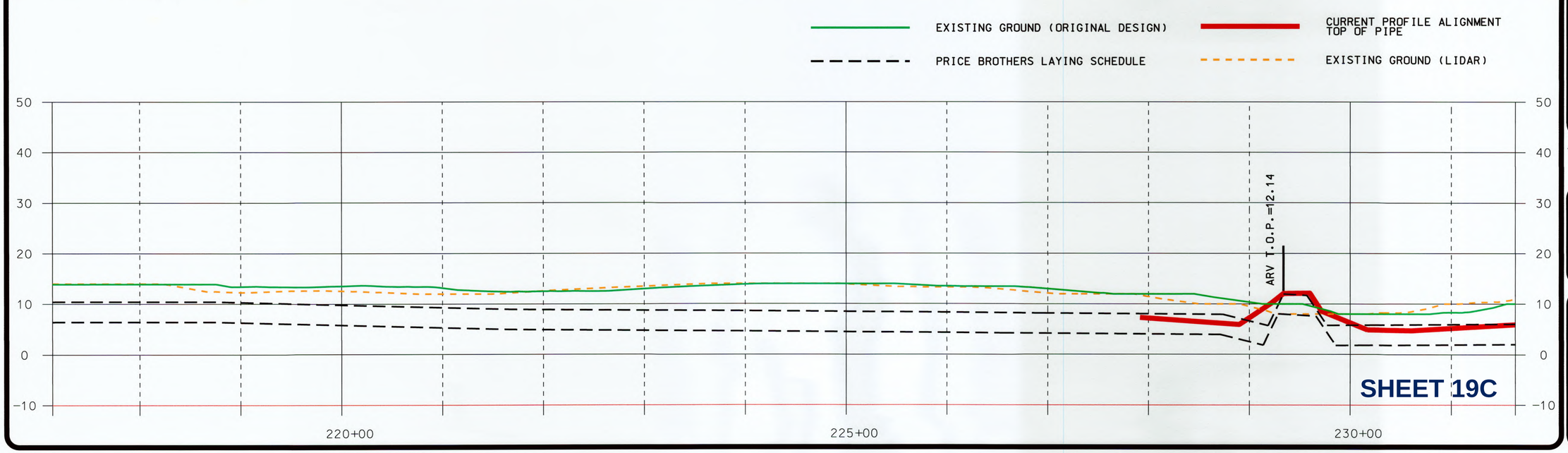

PROJECT NO.: 044424.06

DRAWING NO.: 15

NO.	DATE	DESCRIPTION	BY

REVISIONS

MAWS
MOBILE AREA WATER & SEWER SYSTEM

PROJECT NAME: HALLS MILL /ESLAVA CREEK FORCE MAIN O & M PROCEDURES

SHEET NAME: 48" FORCE MAIN STA:220+58 TO STA:235+08

VOLKERT

CERTIFICATION:

DATE:

DESIGNED:	CHECKED:
DRAWN:	CHECKED:

DATE: 4 / 15 / 12

PROJECT NO.: 044424.06

PLAN/PROFILE SHEET DRAWING NO.: 15

Sheet 15 of 19

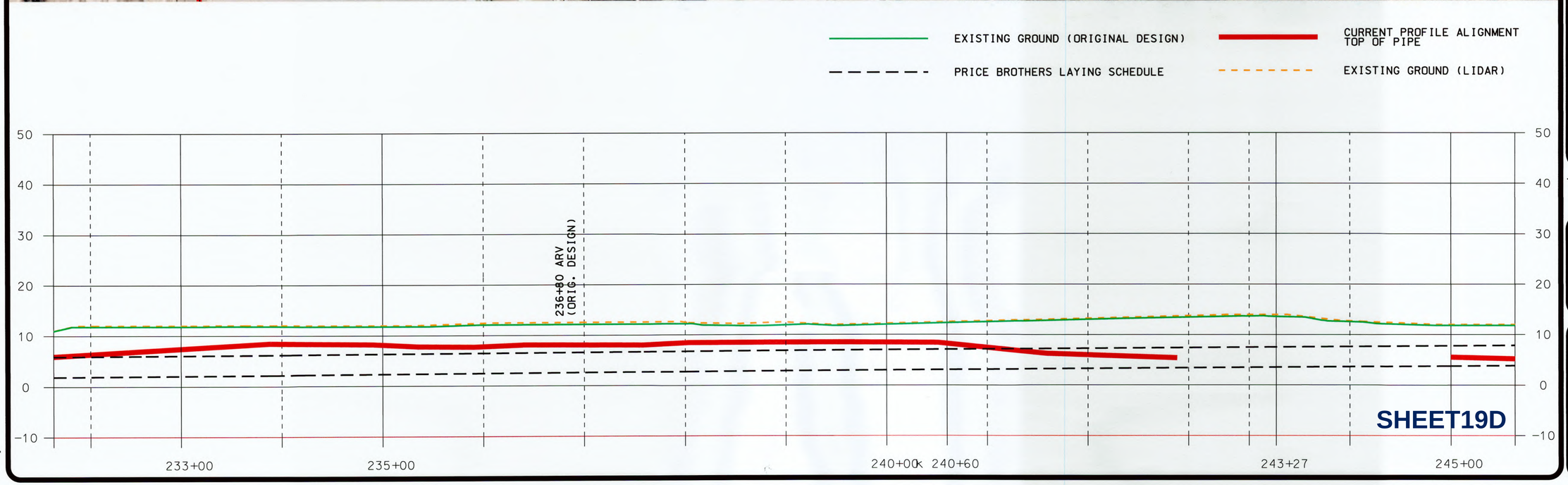

PROJECT NO.: 044424.06

DRAWING NO.: 16

NO.	DATE	DESCRIPTION	BY

REVISIONS

MAWSS
MOBILE AREA WATER & SEWER SYSTEM

PROJECT NAME: HALLS MILL /ESLAVA CREEK FORCE MAIN O & M PROCEDURES

SHEET NAME: 48" FORCE MAIN STA:235+08 TO STA:249+58

VOLKERT

CERTIFICATION:

DATE:

DESIGNED: CHECKED:

DRAWN: CHECKED:

DATE: 4 / 15 / 12

PROJECT NO.: 044424.06

PLAN/PROFILE SHEET DRAWING NO.: 16

Sheet 16 of 19

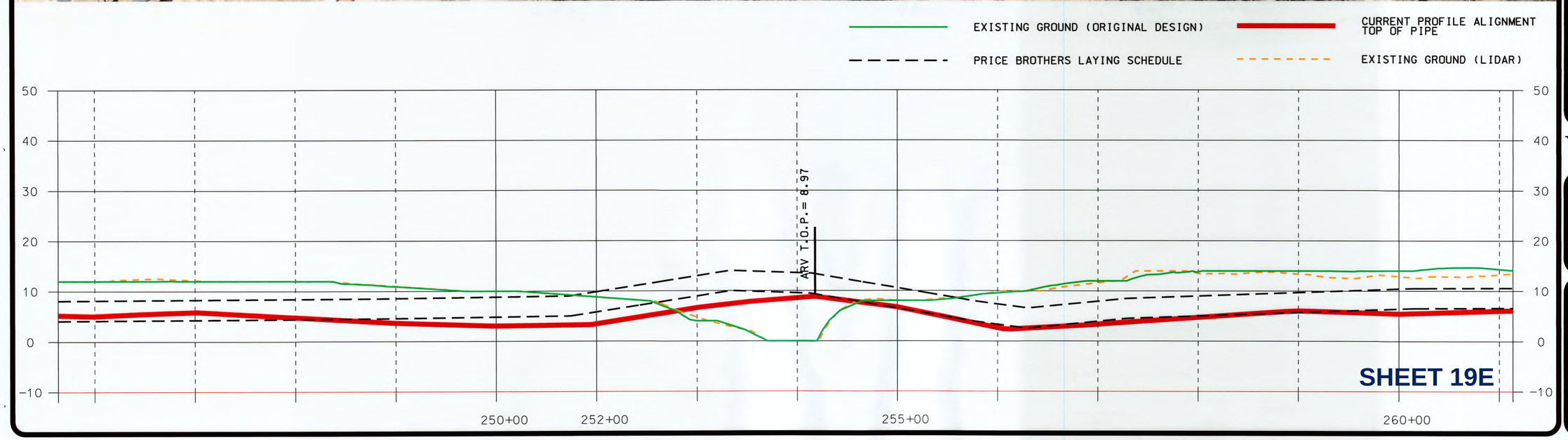

PROJECT NO.: 044424.06

DRAWING. NO.: 17

NO.	DATE	DESCRIPTION	BY
		REVISIONS	

MAWS
MOBILE AREA WATER & SEWER SYSTEM

PROJECT NAME: HALLS MILL /ESLAVA CREEK FORCE MAIN O & M PROCEDURES

SHEET NAME: 48" FORCE MAIN STA: 249+58 TO STA: 265+50

VOLKERT

CERTIFICATION:

DATE:

DESIGNED:	CHECKED:
DRAWN:	CHECKED:

DATE: 4 / 15 / 12

PROJECT NO.: 044424.06

PLAN/PROFILE SHEET DRAWING NO.: 17

Sheet 17 of 19

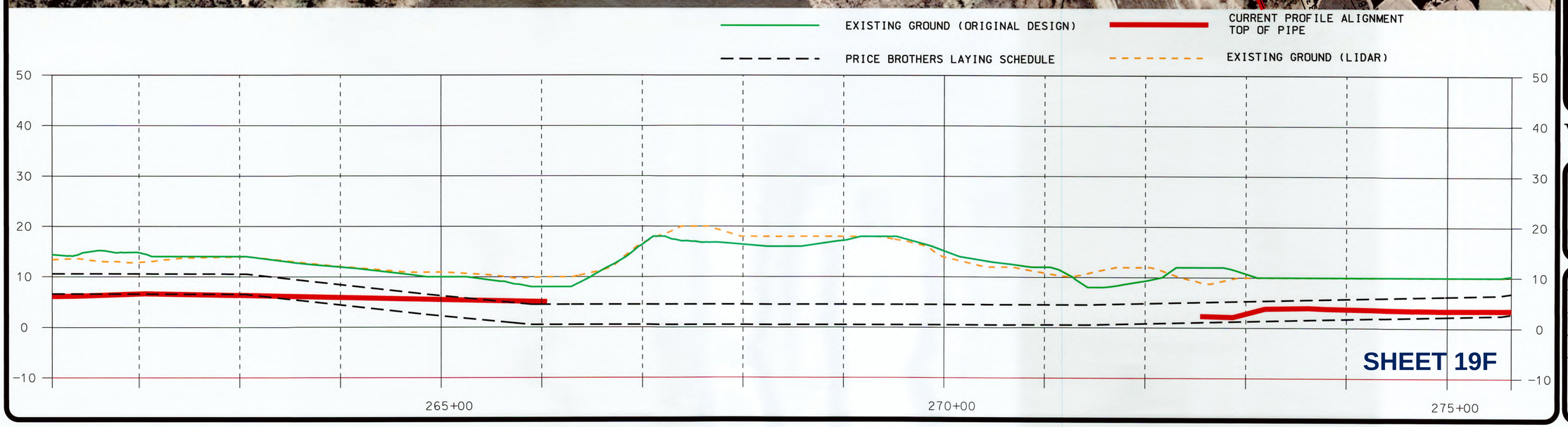

PROJECT NO.: 044424.06

DRAWING NO.: 18

NO.	DATE	DESCRIPTION	BY

REVISIONS

MAWSS
MOBILE AREA WATER & SEWER SYSTEM

PROJECT NAME: HALLS MILL /ESLAVA CREEK FORCE MAIN O & M PROCEDURES

SHEET NAME: 48" FORCE MAIN STA: 265+50 TO STA: 280+00

VOLKERT

CERTIFICATION:

DATE:

DESIGNED:	CHECKED:
DRAWN:	CHECKED:

DATE: 4 / 15 / 12

PROJECT NO.: 044424.06

18

Sheet 18 Of 19

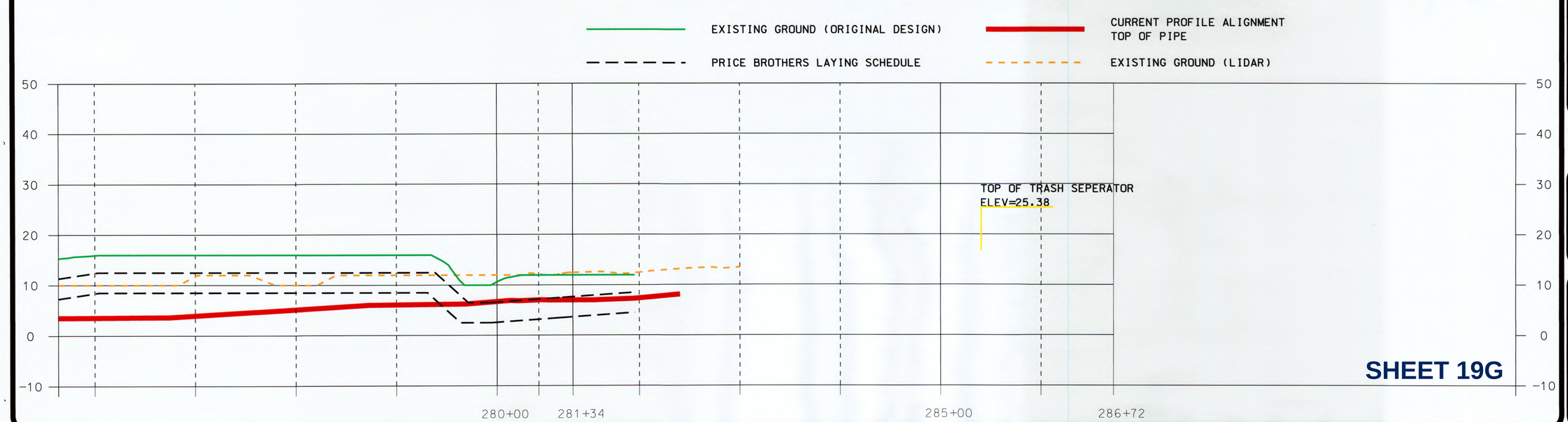

SHEET 19G

PROJECT NO.: 044424.06

DRAWING NO.: 19

NO.	DATE	DESCRIPTION	BY

REVISIONS

MAWS
MOBILE AREA WATER & SEWER SYSTEM

PROJECT NAME: HALLS MILL /ESLAVA CREEK FORCE MAIN O & M PROCEDURES

SHEET NAME: 48" FORCE MAIN STA:280+00 TO EOP

VOLKERT

CERTIFICATION:

DATE:

DESIGNED:	CHECKED:
DRAWN:	CHECKED:

DATE: 9 / 10 / 12

PROJECT NO.: 044424.06

PLAN/PROFILE SHEET DRAWING NO.: 19

Sheet 19 Of 19