TECHNICAL SPECIFICATIONS

CITY OF ATLANTA
EAST AREA WATER QUALITY CONTROL FACILITY IMPROVEMENTS

Seals for Technical Specifications are as follows:

Divisions 01, 11, 14
Hamilton D. Giles, PE
Georgia Registration No. 041536

Division 02
Altarral Hagan, PE
Georgia Registration No. 033633

Divisions 03 – 10, 12, 13
Housam Hobi, PE
Georgia Registration No. 041058

Division 15
Andrew R. Tuttle, PE
Georgia Registration No. 044219

Division 16
Ivan M. Gonzalez, PE
Georgia Registration No. 013444

Division 17
Federico Guillermo Arango Jaramillo, PE
Georgia Registration No. 039674

CITY OF ATLANTA

EAST AREA WATER QUALITY CONTROL FACILITY IMPROVEMENTS

FACILITY	PARCEL ID	DISTRICT	LAND LOT	COUNTY
EAST AREA WATER QUALITY CONTROL FACILITY	15.11101005	15	111	DEKALB
CUSTER AVENUE CSCF	14 002400070451	14	24	Fulton
	14 002400030018	14	24	Fulton
	14 002400030034	14	24	Fulton
	14 002400030026	14	24	Fulton
	14 002400030042	14	24	Fulton
	14 002400030059	14	24	Fulton
	14 002400030067	14	24	Fulton
	14 000900040016	14	9	Fulton
	14 002400030331	14	24	Fulton
	14 0024 LL0020	14	24	Fulton
	14 0009 LL0011	14	9	Fulton
	14 002400030281	14	24	Fulton

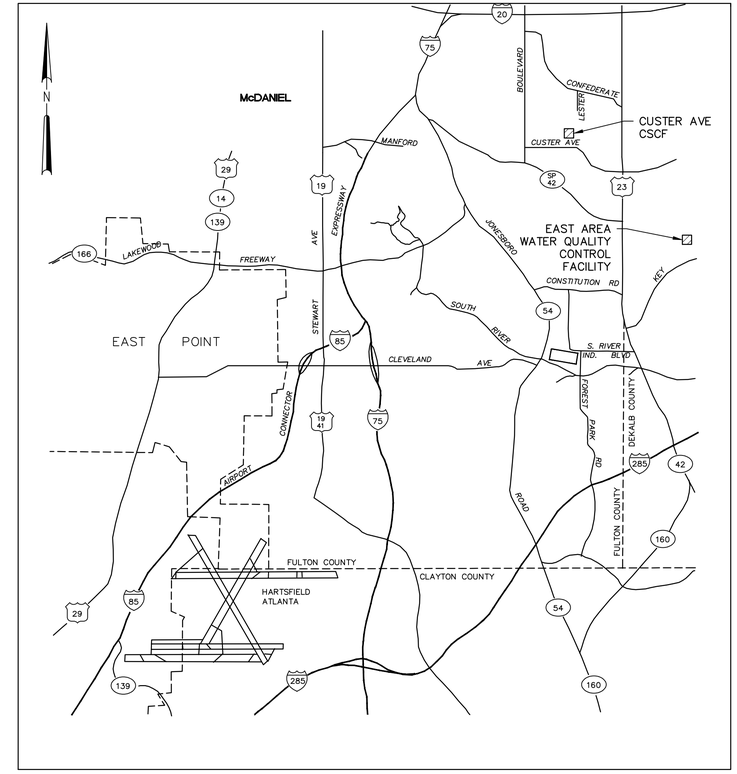

LOCATION MAP

ARCADIS
BPA
A Joint Venture

GEORGIA REGISTERED No. 009978 PROFESSIONAL ENGINEER JOHN DEAN

PROJECT MANAGER: JOHN DEAN, PE
GEORGIA REGISTRATION NO. : 009978

GEORGIA REGISTERED No. PE041536 PROFESSIONAL ENGINEER HAMILTON DAY GILES

DESIGN COORDINATOR: HAMILTON GILES, PE
GEORGIA REGISTRATION NO. : 041536

OWNER
CITY OF ATLANTA
DEPARTMENT OF WATERSHED MANAGEMENT
72 MARIETTA STREET, NW
ATLANTA, GEORGIA 30303

CITY OF ATLANTA
MAYOR
KEISHA LANCE BOTTOMS

WATERSHED MANAGEMENT
COMMISSIONER
KISHIA L. POWELL

CSS MANAGER
DEREK STEWART

811 Know what's **below.** **Call** before you dig.

PROJECT NO. GABPA134			
NO.	DATE	ISSUED FOR	BY
0	JUL 2019	BIDDING	HG

G–001

User: TTHOMAS Spec: AUS-NCSM0D File: G:\GA020ATA\AUTOCAD\ACAD\PROJ\GABPA134 - CSO GROUP 1\BID PACKAGE 2\SHEETS\GENERAL\G-001.DWG Scale:1:1 SavedDate:7/31/2019 Time:15:23 Plot Date: Thomas, Travis; 7/31/2019; 15:45 ; Layout:1

Sheet List Table

Sheet Number	Sheet Title
	GENERAL
G-001	COVER SHEET
G-002	INDEX OF DRAWINGS
G-003	STANDARD ABBREVIATIONS AND SYMBOLS
G-004	PROCESS FLOW DIAGRAM 1 (WET STREAM)
G-005	PROCESS FLOW DIAGRAM 2 (SOLIDS HANDLING)
	CIVIL
C-001	CIVIL LEGEND AND NOTES
C-002	EAWQCF SITE AND LAYDOWN AREA PLAN
C-003	CUSTER AVENUE SITE PLAN
C-004	PROPOSED SLUDGE DEWATERING BUILDING BORING LOGS
C-005	DEMOLITION PLAN (1 OF 3)
C-006	DEMOLITION PLAN (2 OF 3)
C-007	DEMOLITION PLAN (3 OF 3)
C-008	EROSION AND SEDIMENTATION CONTROL LEGEND AND NOTES
C-009	OUTSIDE PIPING, GRADING, DRAINAGE AND EROSION CONTROL PLAN 1
C-010	OUTSIDE PIPING, GRADING, DRAINAGE AND EROSION CONTROL PLAN 2
C-011	OUTSIDE PIPING, GRADING, DRAINAGE AND EROSION CONTROL PLAN 3
C-012	EROSION CONTROL DETAILS 1
C-013	EROSION CONTROL DETAILS 2
C-014	MISCELLANEOUS CIVIL DETAILS 1
C-015	MISCELLANEOUS CIVIL DETAILS 2
C-016	MISCELLANEOUS CIVIL DETAILS 3
C-017	GREEN INFRASTRUCTURE DETAILS 1
C-018	GREEN INFRASTRUCTURE DETAILS 2
C-019	LANDSCAPING PLAN
C-020	LANDSCAPE PLAN – NOTES AND DETAILS
	MECHANICAL
M-001	MECHANICAL LEGEND AND NOTES
M-002	FILTER BUILDING MODIFICATION PLAN AND CODED NOTES
M-003	SLUDGE PUMP STATION DEMOLITION PLAN AND SECTIONS
M-004	SEDIMENTATION BASIN DEMOLITION PLAN AND SECTIONS
M-005	SEDIMENTATION BASIN AND SLUDGE PUMPING PLAN
M-006	SEDIMENTATION BASIN AND SLUDGE PUMPING SECTIONS AND DETAILS 1
M-007	SEDIMENTATION BASIN AND SLUDGE PUMPING SECTIONS AND DETAILS 2
M-008	SLUDGE HOLDING TANK DEMOLITION PLAN
M-009	SLUDGE HOLDING TANK DEMOLITION SECTIONS
M-010	SLUDGE HOLDING TANK PLAN
M-011	SLUDGE HOLDING TANK SECTIONS
M-012	SOLIDS PROCESSING PUMP STATION DEMOLITION PLAN AND SECTIONS
M-013	SOLIDS PROCESSING PUMP STATION PLAN
M-014	SOLIDS PROCESSING PUMP STATION SECTIONS AND DETAILS
M-015	CENTRIFUGE PLATFORM DEMOLITION PLAN AND SECTIONS
M-016	SLUDGE DEWATERING BUILDING PLAN
M-017	SLUDGE DEWATERING BUILDING SECTIONS
M-018	SLUDGE DEWATERING BUILDING SECTIONS AND DETAILS
M-019	EAWQCF SODIUM HYPOCHLORITE SYSTEM PLAN AND SECTIONS
M-020	SODIUM HYPOCHLORITE DOSING AND SAMPLING POINT
M-021	EAWQCF – SODIUM BISULFITE ROOM
M-022	CUSTER AVENUE – SODIUM BISULFITE SYSTEM PLAN AND SECTIONS
M-023	CUSTER AVENUE TUNNEL GATE REPAIR
M-024	STANDARD MECHANICAL DETAILS 1
M-025	STANDARD MECHANICAL DETAILS 2
	STRUCTURAL
S-001	GENERAL STRUCTURAL NOTES
S-002	SLUDGE DEWATERING BUILDING FOUNDATION PLAN
S-003	SLUDGE DEWATERING BUILDING FIRST FLOOR PLAN
S-004	SLUDGE DEWATERING BUILDING ROOF PLAN AND DETAILS
S-005	SLUDGE DEWATERING BUILDING SECTIONS
S-006	SLUDGE DEWATERING BUILDING SECTIONS AND DETAILS
S-007	SLUDGE DEWATERING BUILDING ELEVATIONS
S-008	SED. BASINS PLAN, SECTIONS AND DETAILS (SUB. SLUDGE PUMP ADD.)
S-009	SEDIMENTATION BASINS PLAN, SECTIONS, AND DETAILS (BASIN LEAK)
S-010	TUNNEL PUMP STATION OUTFALL REPAIR PLAN AND PROFILE
S-011	TUNNEL PUMP STATION OUTFALL REPAIR SECTION
S-012	STRUCTURAL TYPICAL DETAILS 1
S-013	STRUCTURAL TYPICAL DETAILS 2
S-014	STRUCTURAL TYPICAL DETAILS 3
S-015	DOOR AND WINDOW SCHEDULES AND DETAILS
S-016	MISCELLANEOUS TYPICAL DETAILS
S-017	SLUDGE HOLDING TANK PLAN AND NOTES
S-018	SLUDGE HOLDING TANK EXTERIOR CONDITION PHOTOS
S-019	SLUDGE HOLDING TANK INTERIOR CONDITION PHOTOS
S-020	SLUDGE HOLDING TANK REPAIR DETAILS AND QUANTITIES
	HVAC & PLUMBING
HP-001	HVAC LEGEND AND NOTES
HP-002	SLUDGE DEWATERING BUILDING HVAC PLAN
HP-003	SLUDGE DEWATERING BUILDING HVAC SECTION
HP-004	SLUDGE DEWATERING BUILDING PLUMBING SCHEMATICS
HP-005	SLUDGE PUMP STATION HVAC PLAN
HP-006	SOLIDS PROCESSING PUMP STATION HVAC PLAN
HP-007	HVAC EQUIPMENT SCHEDULES
HP-008	HVAC AND PLUMBING DETAILS 1
HP-009	HVAC AND PLUMBING DETAILS 2
HP-010	HVAC AND PLUMBING DETAILS 3

	ELECTRICAL
E-001	SYMBOLS, LEGEND, AND GENERAL NOTES (1 OF 2)
E-002	SYMBOLS, LEGEND, AND GENERAL NOTES (2 OF 2)
E-003	ELECTRICAL SITE PLAN (1 OF 3)
E-004	ELECTRICAL SITE PLAN (2 OF 3)
E-005	ELECTRICAL SITE PLAN (3 OF 3)
E-006	ELECTRICAL DEMOLITION PLAN (1 OF 3)
E-007	ELECTRICAL DEMOLITION PLAN (2 OF 3)
E-008	ELECTRICAL DEMOLITION PLAN (3 OF 3)
E-009	SINGLE LINE DIAGRAM MAIN SINGLE LINE DEMOLITION
E-010	SINGLE LINE DIAGRAM CENTRIFUGE BUILDING MCC-CB DEMOLITION
E-011	SINGLE LINE DIAGRAM FILTER BUILDING MCC-FB DEMOLITION
E-012	SINGLE LINE DIAGRAM CHEMICAL BUILDING MCC-CF DEMOLITION
E-013	SINGLE LINE DIAGRAM SLUDGE PUMPING STATION MCC-SP DEMOLITION
E-014	SINGLE LINE DIAGRAM MAIN SINGLE LINE 1 PROPOSED
E-015	SINGLE LINE DIAGRAM FILTER BUILDING MCC-FB PROPOSED
E-016	SINGLE LINE DIAGRAM CHEMICAL BUILDING MCC-CF PROPOSED
E-017	SINGLE LINE DIAGRAM SLUDGE PUMPING STATION MCC-SP PROPOSED
E-018	SINGLE LINE DIAGRAM SLUDGE DEWATERING BUILDING MCC-SDB PROPOSED
E-019	SINGLE LINE DIAGRAM SOLIDS PROCESSING BUILDING DP-SB PROPOSED
E-020	FILTER BUILDING ELECTRICAL PLAN
E-021	CHEMICAL BUILDING ELECTRICAL PLAN
E-022	SLUDGE PUMPING STATION ELECTRICAL PLAN
E-023	SEDIMENTATION BASIN & SLUDGE PUMPING EQUIPMENT, POWER & CONTROLS
E-024	SLUDGE DEWATERING BUILDING POWER AND CONTROL
E-025	SLUDGE DEWATERING BUILDING ELEC LIGHTING AND PROTECTION
E-026	SLUDGE HOLDING TANK POWER AND CONTROL PLAN
E-027	SODIUM HYPOCHLORITE DOSING AND SAMPLING POINT POWER PLAN
E-028	CUSTER AVENUE – POWER & LIGHTING PLAN CHEMICAL STORAGE
E-029	SOLIDS PROCESSING BUILDING POWER AND CONTROL
E-030	EAWQCF CONTROL WIRING INTERCONNECTION PLANS AND DETAILS 1
E-031	EAWQCF CONTROL WIRING INTERCONNECTION PLANS AND DETAILS 2
E-032	EAWQCF CONTROL WIRING INTERCONNECTION PLANS AND DETAILS 3
E-033	EAWQCF CONTROL WIRING INTERCONNECTION PLANS AND DETAILS 4
E-034	EAWQCF CONTROL WIRING INTERCONNECTION PLANS AND DETAILS 5
E-035	DUCT BANK SECTIONS
E-036	ELECTRICAL PANELBOARD SCHEDULES DRAWING 1
E-037	ELECTRICAL PANELBOARD SCHEDULES DRAWING 2
E-038	ELECTRICAL PANELBOARD SCHEDULES DRAWING 3
E-039	CONDUIT SCHEDULE NO. 1
E-040	CONDUIT SCHEDULE NO. 2
E-041	CONDUIT SCHEDULE NO. 3
E-042	CONDUIT SCHEDULE NO. 4
E-043	ELECTRICAL DETAILS 1
E-044	ELECTRICAL DETAILS 2
E-045	ELECTRICAL DETAILS 3
E-046	ELECTRICAL DETAILS 4
	INSTRUMENTATION
I-001	INSTRUMENTATION AND CONTROLS LEGEND AND GENERAL NOTES
I-002	TUNNEL PUMP STATION DEWATERING P&ID
I-003	VORTEX SEPARATOR P&ID
I-004	GRIT SETTLING AND SEDIMENTATION BASIN 1 P&ID
I-005	GRIT SETTLING AND SEDIMENTATION BASIN 2 P&ID
I-006D	SLUDGE PUMPING PROPOSED P&ID
I-006	GRIT PUMP STATION AND DETRITUS TANK P&ID
I-007	FILTER SYSTEM P&ID
I-008	TYPICAL FILTER P&ID
I-009	WASTE WASHWATER PUMPING STATION P&ID
I-010	WASTE WASHWATER BLOWERS P&ID
I-011	EA WQCF SODIUM HYPOCHLORITE SYSTEM P&ID
I-012	EA WQCF SODIUM BISULFITE SYSTEM P&ID
I-013	FERRIC CHLORIDE SYSTEM P&ID
I-014	POLYMER SYSTEM P&ID
I-015	GRIT SETTLING TANK FLUSHING SYSTEM P&ID
I-016	MISCELLANEOUS P&ID DETAILS
I-017	SLUDGE THICKENING P&ID
I-018	SOLIDS PROCESSING BUILDING P&ID
I-019	SLUDGE DEWATERING & POLYMER SYSTEM P&ID
I-020	CUSTER AVENUE – SODIUM BISULFITE AND DOSING FACILITIES P&ID
I-021	INSTRUMENT INSTALLATION DETAILS 1
I-022	INSTRUMENT INSTALLATION DETAILS 2
I-023	CONTROL SYSTEM BLOCK DIAGRAM

COPYRIGHT:
ARCADIS U.S., INC.
2016

IF THIS BAR IS NOT 1" INDICATED SCALE IS INCORRECT

NO.	DATE	ISSUED FOR	BY
0	JUL 2019	BIDDING	HG

SEALS

GEORGIA REGISTERED PE 031536 PROFESSIONAL ENGINEER HAMILTON DAY GILES 07/31/19

ARCADIS
BPA
A Joint Venture
2839 Paces Ferry Road
Suite 900
Atlanta, GA 30339
Tel: 770-431-8666
Fax: 770-435-2666
www.arcadis-us.com

RESURGENS 1901 ATLANTA, GA. 1960

ATLANTA, GEORGIA
CITY OF ATLANTA
DEPARTMENT OF WATERSHED MANAGEMENT

EAST AREA WATER QUALITY CONTROL FACILITY IMPROVEMENTS

W.01.02.0085

SHEET TITLE

INDEX OF DRAWINGS

DATE:	JULY 2019
PROJECT NO.:	GABPA134
DESIGNED BY:	R. KUNZ
DRAWN BY:	C. MARTINI
CHECKED BY:	A. SHARP

SCALE: NONE

G-002

SHEET 2 OF 150

User:TTHOMAS Spec:AUS-NCSMOD File:I:\ACAD\PROJ\GABPA134 - CSO GROUP 1\BID PACKAGE 2\SHEETS\GENERAL\G-002.DWG Scale:1:1 SavedDate:5/30/2019 Time:16:01 Time:16:01 Plot Date: Thomas, Travis; 7/31/2019; 14:58 ; Layout:2

ABBREVIATIONS

&	AND
@	AT
A	
A/C	AIR CONDITIONING
AB	ANCHOR BOLT
ABAN	ABANDONED
ADJ	ADJUSTABLE
AGGR	AGGREGATE
ALT	ALTERNATE
ALUM	ALUMINUM
ANN	ANNUNICATOR
APPROX	APPROXIMATE
ARV	AIR RELEASE VALVE
AUTO	AUTOMATIC
AUX	AUXILIARY
AVG	AVERAGE
AWG	AMERICAN WIRE GAUGE
B	
BFP	BACKFLOW PREVENTER, BELT FILTER PRESS
BFV	BUTTERLFY VALVE
BLDG	BUILDING
C	
C/C	CENTER TO CENTER
CB	CATCH BASIN
CI	CAST IRON, CURB INLET
CIP	CAST IN PLACE, CAST IRON PIPE
CJ	CONSTRUCTION JOINT, CONTROL JOINT
CL, ℄	CENTER LINE
CL,	CHLORINE RESIDUAL
CMU	CONCRETE MASONRY UNIT
CO	CLEANOUT
CONC	CONCRETE
CONT.	CONTINUOUS
CPLG	COUPLING
CS	CARBON STEEL
CS	COMBINED SEWER
CSCF	COMBINED SEWER CONTROL FACILITY
D	
DAT	DATUM
DEG	DEGREE
DEMO	DEMOLITION
DET	DETAIL
DI	DUCTILE IRON, DROP INLET
DIA	DIAMETER
DISC	DISCONNECT
DISC SW	DISCONNECT SWITCH
DISCH	DISCHARGE
DISTR PNL	DISTRIBUTION PANEL
DO	DISSOLVED OXYGEN
DR	DRAIN, DOOR
DS	DOWNSPOUT
DWG	DRAWING
E	
E	EAST
EA	EACH
EC	EDGE OF CURB
ECC	ECCENTRIC
EFF	EFFLUENT
EJ	EXPANSION JOINT
EL, ELEV	ELEVATION
ELEC	ELECTRICAL
EX, EXIST	EXISTING
EXP	EXPANSION, EXPOSED
F	
FD	FLOOR DRAIN
FDN	FOUNDATION
FE	FIRE EXTINGUISHER
FH	FIRE HYDRANT
FIG	FIGURE
FLEX	FLEXIBLE
FLG	FLANGE
FRP	FIBERGLASS REINFORCED PLASTIC
FT	FOOT, FEET
FTG	FOOTING
G	
GA	GAUGE
GAL	GALLON
GALV	GALVANIZED
GR	GRADE
H	
HB	HOSE BIB
HOA	HAND-OFF-AUTOMATIC
HP	HORSEPOWER
HVAC	HEATING, VENTILATING & AIR CONDITIONING
I	
I/O	INPUT/OUTPUT
ID	INSIDE DIAMETER, IDENTIFICATION
IN	INCH
INF	INFLUENT
INV EL	INVERT ELEVATION
J	
JB	JUNCTION BOX
JT	JOINT
K	
KVA	KILOVOLT AMPERE
KW	KILOWATT
KWH	KILOWATT HOUR
KWHM	KILOWATT HOUR METER
KWM	KILOWATT METER
L	
LB	POUND
LCP	LOCAL CONTROL PANEL
LF	LINEAR FOOT
LTG	LIGHTING
LV	LOW VOLTAGE
M	
mA	MILLIAMPERE
MAX	MAXIMUM
MCC	MOTOR CONTROL CENTER
MH	MANHOLE
MIN	MINIMUM, MINUTE
MJ	MECHANICAL JOINT
MOT	MOTOR
mV	MILLIVOLT
N	
N	NORTH
NA	NOT APPLICABLE
NC	NORMALLY CLOSED
NEC	NATIONAL ELECTRICAL CODE
NEMA	NATIONAL ELECTRICAL MANUFACTURES ASSOCIATION
NIC	NOT IN CONTRACT
NO	NUMBER, NORMALLY OPEN
NTS	NOT TO SCALE
O	
O/C	OPEN/CLOSE
OC	ON CENTER
OD	OUTSIDE DIAMETER
OF	OUTSIDE FACE, OVERFLOW
P	
P	PICTURE
PB	PULL BOX, PANELBOARD, PUSH BUTTON
PH	PHASE
PNL	PANEL
POS	POSITION, POSITIVE
PREFAB	PREFABRICATED
PRESS	PRESSURE
PRV	PRESSURE REDUCING VALVE, PRESSURE RELIEF VALVE, PRESSURE REGULATING VALVE
PS CONC	PRESTRESSED CONCRETE
PSF	POUNDS PER SQUARE FOOT
PSI	POUNDS PER SQUARE INCH
PSIA	POUNDS PER SQUARE INCH ABSOLUTE
PSIG	POUNDS PER SQUARE INCH GAGE
PT	PAINT, PRESSURE TREATED, POINT OF TANGENCY
PVC	POLYVINYL CHLORIDE
PVMT	PAVEMENT
PW	POTABLE WATER
PWR	POWER
Q	
QTY	QUANTITY
R	
RED	REDUCER
REBAR	REINFORCING STEEL BARS
RECPT	RECEPTACLE
REINF	REINFORCE (D) (ING) (MENT)
RV	ROOF VENT
S	
S	SOUTH
S/S	START/STOP
SD	STORM DRAIN
SECT	SECTION
SP	SPARE
SPEC	SPECIFICATION
SPPS	SOLIDS PROCESSING PUMP STATION
SPRT	SUPPORT
SQ FT	SQUARE FOOT
SQ IN	SQUARE INCH
SST	STAINLESS STEEL
STA	STATION
STD	STANDARD
STL	STEEL
STR	STARTER
STRUCT	STRUCTURAL
SV	SOLENOID VALVE
SW	SWITCH
SWBD	SWITCHBOARD
SWGR	SWITCHGEAR
T	
T/	TOP OF
TD	TRENCH DRAIN
TEMP	TEMPORARY, TEMPERATURE
TO_, T/	TOP OF ___
TOB	TOP OF BEAM
TOC, TC	TOP OF CONCRETE, TOP OF CURB
TOD	TOP OF DUCT
TOF	TOP OF FOOTING
TOM	TOP OF MASONRY
TOP	TOP OF PAVEMENT, TOP OF PARAPET
TS	TEMPERATURE SWITCH
TYP	TYPICAL
U	
UGND	UNDERGROUND
UP	UTILITY POLE
UPS	UNINTERRUPTIBLE POWER SUPPLY
V	
V	VENT, VOLT
VAC	VACUUM
VB	VACUUM BREAKER, VALVE BOX
VENT	VENTILATION, VENTILATOR
VFD	VARIABLE FREQUENCY DRIVE
VTR	VENT THROUGH ROOF
W	
W	WEST, WASTE, WATT
W/	WITH
W/O	WITHOUT
WLD	WELDED
WM	WATER MAIN, WATER METER, WIRE MESH
WS	WATERSTOP
WT	WEIGHT, WATER TIGHT
WW	WASTE WATER, WIREWAY
X	
X-SECT	CROSS SECTION
XFRM	TRANSFORMER
XR	EXISTING TO REMAIN
XS	LIMIT SWITCH
Y	
YH	YARD HYDRANT

EQUIPMENT NUMBER PREFIXES

ARV	AIR RELEASE VALVE
BFP	BELT FILTER PRESS
BV	BALL VALVE
BP	BACKFLOW PREVENTER
BPV	BACK PRESSURE VALVE
BSN	BAR SCREEN
CFR	CHEMICAL FEEDER (POLYMER, CHLROINATOR, ETC.)
CON	CONVEYOR (BELT, SCREW)
CRN	CRANE
CV	CHECK VALVE
CV	CONTROL VALVE
EF	EXHAUST FAN
F	FILTER, STATIC
FE	FLOW ELEMENT
FLT	FILTER
H	HOIST
HEX	HEAT EXCHANGER (RADIATOR, AFTERCOOLER, ETC.)
HP	HEAT PUMP
HPR	HOPPER
HTR	HEATER
INJ	INJECTOR (CHLORINE, STEAM, CHEMICAL, ETC.)
LCP	LOCAL CONTROL PANEL
LVR	LOUVER (ADJUSTABLE ONLY)
M	MOTOR
MCC	MOTOR CONTROL CENTER
MX	MIXER (FLASH, EDUCTOR, ETC.)
PLV	PLUG VALVE
P	PUMP
PCV	PRESSURE CONTROL VALVE
PDC	POWER DISTRIBUTION CENTER
PLC	PROGRAMMABLE LOGIC CONTROLLER
PNL	PANEL
PV	PINCH VALVE
REC	RECEIVER
SG	SLUICE GATE
SLG	SLIDE GATE
SV	SOLENOID VALVE
SWBD	SWITCHBOARD
SWGR	SWITCHGEAR
T	TANK (NONPRESSURE TYPE: E.G. STORAGE. FUEL, ETC.)
TFR	TRANSFOMER
THK	THICKENER
TM	TIMER
TRS	TRANSFER SWITCH
UH	UNIT HEATER
VFD	VARIABLE FREQUENCY DRIVE
VP	VACUUM PUMP
WH	WATER HEATER
WHR	WASHER (GRIT, ETC.)
WQCF	WATER QUALITY CONTROL FACILITY
WSH	OVERLOAD TORQUE SWITCH
WSHH	SHEAR PIN LIMIT SWITCH

MECHANICAL PIPING ABBREVIATIONS

CU	COPPER
CMD	CHEMICAL DRAIN
CLS	CHLORINE SOLUTION
CS	CS INFLUENT
D	DRAIN
DI	DUCTILE IRON PIPE
DR	DRAIN
FEFF	FINAL EFFLUENT
GR	GRIT
HDPE	HIGH DENSITY POLYETHYLENE PIPE
NaOCL	SODIUM HYPOCHLORITE
NBS	SODIUM BISULFITE
OF	OVERFLOW
PE	POLYETHYLENE PIPE
POL	POLYMER
PVC	POLYVINYL CHLORIDE PIPE
SL	SLUDGE
SMP	SAMPLING LINE
SS	STAINLESS STEEL PIPE
STL	STEEL PIPE
SW	SEAL WATER
TS	THICKENED SLUDGE
VFD	VARIABLE FREQUENCY DRIVE
VIC	VICTAULIC
DI (V)	VICTAULIC DUCTILE IRON PIPE
W1	WATER (POTABLE)
W2	WATER (POTABLE-BACKFLOW PREVENTER)
W3	WATER (NON-POTABLE PLANT WATER)
WWW	WASTE WASHWATER

FACILITY AREA IDENTIFICATION

PROCESS NUMBER	PROCESS AREA
00	CSO PUMPING STATION
10	DRUM SCREEN
20	VORTEX SEAPRATOR
30	SEDIMENTATION AND SLUDGE PUMPING
31	THICKENER TANKS
32	SLUDGE PUMP BUILDING
33	SLUDGE DEWATERING BUILDING
40	FILTERS
50	SODIUM HYPOCHLORITE CHEMICAL AND MISC. SYSTEMS
81	SLUDGE HOLDING TANK
82	SOLIDS PROCESSING PUMP STATION
83	DEWATERING BUILDING
93	TUNNEL PUMPING STATION
94	CHEMICAL BUILDING
95	VORTEX SEPARATOR
96	GRIT SETTLING BASIN & SEDIMENTATION BASIN
97	HIGH RATE FILTER
98	POST TREATMENT CHEMICALS

TITLE MARKERS

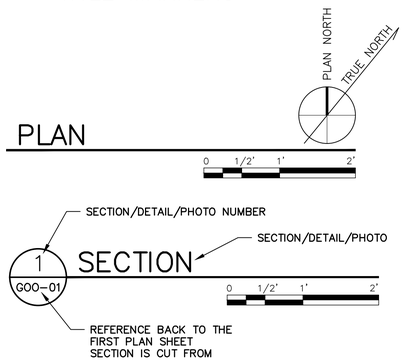

TYPICAL DETAILS

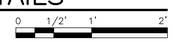

SECTION MARKERS

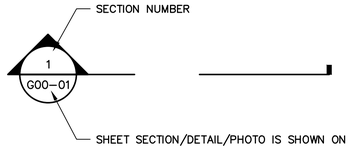

PIPE DESIGNATION

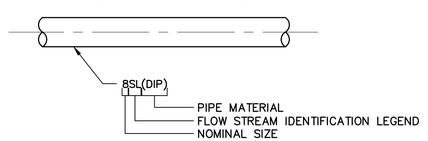

DISCIPLINE DESIGNATOR

G	GENERAL
I	INSTRUMENTATION
C	CIVIL (SITE)
S	STRUCTURAL
M	MECHANICAL (PROCESS)
H/P	HVAC, PLUMPING
E	ELECTRICAL

SHEET NUMBER IDENTIFICATION

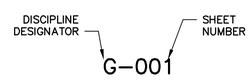

COPYRIGHT: ARCADIS U.S., INC. 2016

IF THIS BAR IS NOT 1" INDICATED SCALE IS INCORRECT

NO.	DATE	ISSUED FOR	BY
0	JUL 2019	BIDDING	HG

SEALS

GEORGIA REGISTERED P.E. PROFESSIONAL ENGINEER HAMILTON DAY GILES

ARCADIS BPA A Joint Venture
2839 Paces Ferry Road
Suite 900
Atlanta, GA 30339
Tel: 770-431-8666
Fax: 770-435-2666
www.arcadis-us.com

ATLANTA, GEORGIA
CITY OF ATLANTA
DEPARTMENT OF WATERSHED MANAGEMENT

EAST AREA WATER QUALITY CONTROL FACILITY IMPROVEMENTS

W.01.02.0085

SHEET TITLE

STANDARD ABBREVIATIONS AND SYMBOLS

DATE:	JULY 2019
PROJECT NO.:	GABPA134
DESIGNED BY:	R. KUNZ
DRAWN BY:	C. MARTINI
CHECKED BY:	A. SHARP

SCALE: NONE

G-003

SHEET 3 OF 150

User: TTHOMAS Spec: AUS-NCSM0D File: I:\ACAD\PROJ\GABPA134 - CSO GROUP 1\BID PACKAGE 2\SHEETS\GENERAL\G-003.DWG Scale: 1:1 SavedDate: 3/26/2019 Time: 14:24 Plot Date: Thomas, Travis: 7/31/2019; 14:59 ; Layout:3

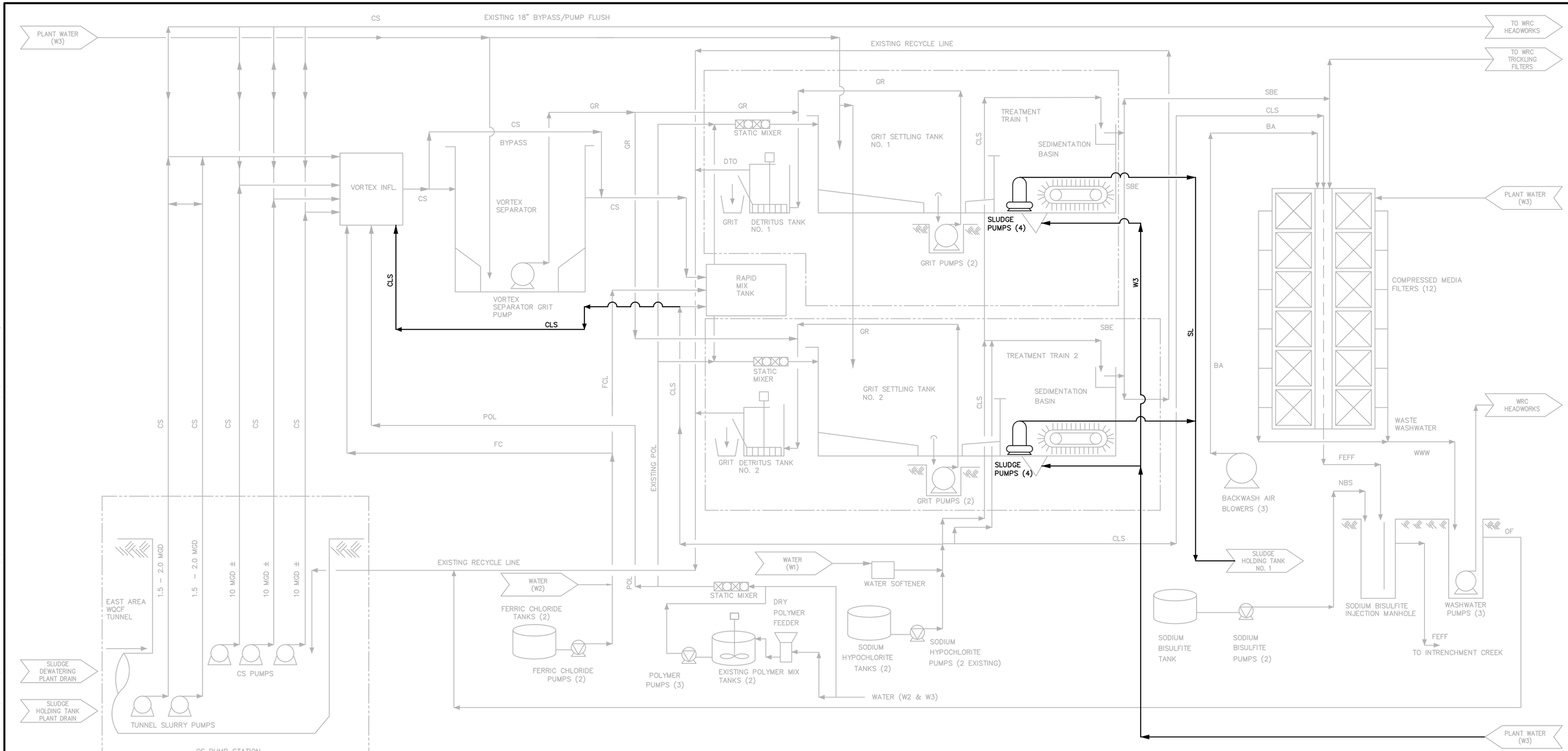

User: TTHOMAS Spec: AUS-NCSMOD File: I:\ACAD\PROJ\GABPA134 - CSO GROUP 1\BID PACKAGE 2\SHEETS\GENERAL\G-004.DWG Scale:1:1 SavedDate:8/6/2018 Time:16:53 Plot Date: Thomas, Travis; 7/31/2019; 15:00 : Layout:4

COPYRIGHT:
ARCADIS U.S., INC.
2016

IF THIS BAR IS NOT 1" INDICATED SCALE IS INCORRECT

NO.	DATE	ISSUED FOR	BY
0	JUL 2019	BIDDING	HG

SEALS

GEORGIA REGISTERED P.E. PE017536 PROFESSIONAL ENGINEER HAMILTON DAY GILES

ARCADIS
BPA
A Joint Venture
2839 Paces Ferry Road
Suite 900
Atlanta, GA 30339
Tel: 770-431-8666
Fax: 770-435-2666
www.arcadis-us.com

ATLANTA, GEORGIA
CITY OF ATLANTA
DEPARTMENT OF WATERSHED MANAGEMENT

EAST AREA WATER QUALITY CONTROL FACILITY IMPROVEMENTS

W.01.02.0085

SHEET TITLE

PROCESS FLOW DIAGRAM 1 (WET STREAM)

DATE:	JULY 2019
PROJECT NO.:	GABPA134
DESIGNED BY:	M. BRONSTEIN
DRAWN BY:	J. BROWN
CHECKED BY:	A. SHARP

SCALE: NONE

G-004

SHEET 4 OF 150

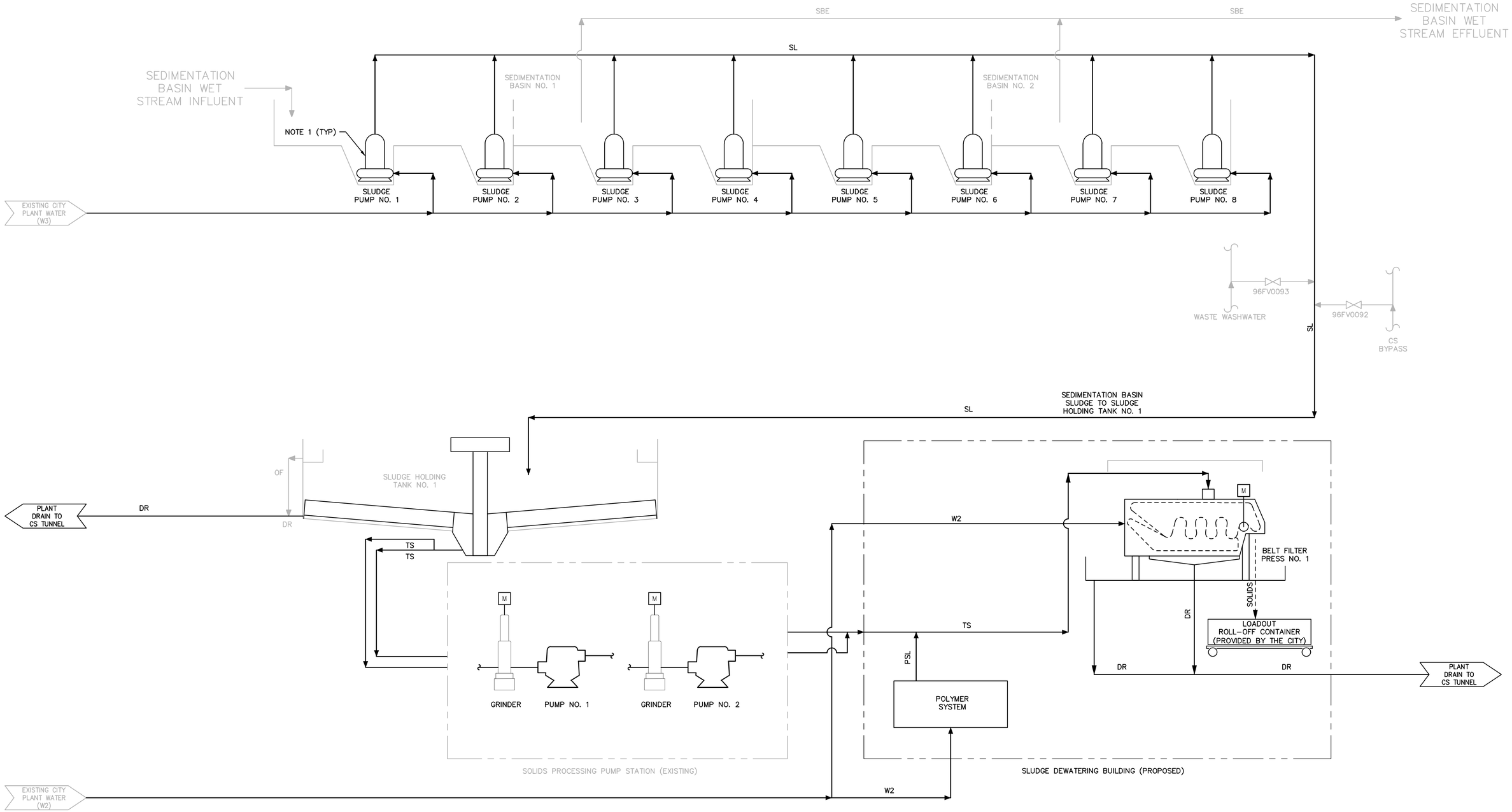

NOTES:

1. SLUDGE CONVEYED TO SLUDGE PUMPS BY EXISTING COLLECTOR MECHANISMS.

COPYRIGHT:
ARCADIS U.S., INC.
2016

IF THIS BAR IS NOT 1" INDICATED SCALE IS INCORRECT

NO.	DATE	ISSUED FOR	BY
0	JUL 2019	BIDDING	HG

SEALS

GEORGIA REGISTERED PE 031536 PROFESSIONAL ENGINEER HAMILTON DAY GILES 07/31/19

ARCADIS
BPA
A Joint Venture
2839 Paces Ferry Road
Suite 900
Atlanta, GA 30339
Tel: 770-431-8666
Fax: 770-435-2666
www.arcadis-us.com

RESURGENS 1901 ATLANTA, GA. 2001

ATLANTA, GEORGIA
CITY OF ATLANTA
DEPARTMENT OF WATERSHED MANAGEMENT

EAST AREA WATER QUALITY CONTROL FACILITY IMPROVEMENTS

W.01.02.0085

SHEET TITLE

PROCESS FLOW DIAGRAM 2 (SOLIDS HANDLING)

DATE:	JULY 2019
PROJECT NO.:	GABPA134
DESIGNED BY:	M. BRONSTEIN
DRAWN BY:	C. MARTINI
CHECKED BY:	A. SHARP

SCALE: NONE

G-005

SHEET 5 OF 150

User:TTHOMAS Spec:AUS-NCSMOD File:I:\ACAD\PROJ\GABPA134 - CSO GROUP 1\BID PACKAGE 2\SHEETS\GENERAL\G-005.DWG Scale:1:1 SavedDate:2/27/2019 Time:16:33 Plot Date: Thomas, Travis: 7/31/2019, 15:02 ; Layout:5

GENERAL NOTES:

1. TOPOGRAPHIC SURVEY FURNISHED BY: CITY OF ATLANTA & ARCADIS 2839 PACES FERRY ROAD SE SUITE 900, ATLANTA, GA 30339. LAST REVISED SEPTEMBER 21, 2015.
2. ALL ELEVATIONS ARE BASED ON STATE PLANE COORDINATES, N.A.D. 83 – GEORGIA WEST ZONE. HORIZONTAL DATUM IS BASED ON GEORGIA STATE PLANE COORDINATES.
3. EXCESS EXCAVATED MATERIAL SHALL BE HAULED OFF–SITE AND LEGALLY DISPOSED OF IN A SUITABLE LOCATION DETERMINED BY THE CONTRACTOR.
4. LOCATION AND ELEVATIONS OF EXISTING SITE FEATURES, UTILITIES, PIPES AND WORK ARE BASED ON THE BEST AVAILABLE INFORMATION INCLUDING TOPOGRAPHIC SURVEY AND RECORD DRAWINGS FOR THE INTRENCHMENT CREEK WRC AND THE EAST AREA CSO TREATMENT PLANT. EXACT LOCATION AND COMPLETENESS IS NOT GUARANTEED. IT SHALL BE THE CONTRACTOR'S RESPONSIBILITY TO VERIFY ALL EXISTING CONDITIONS ABOVE AND BELOW THE GROUND SURFACE AT THE SITE PRIOR TO CONSTRUCTION. FINAL LOCATION OF PIPES SHALL BE DETERMINED IN THE FIELD AND SHALL BE APPROVED BY THE ENGINEER.
5. THE CONTRACTOR MAINTAINS RESPONSIBILITY FOR LOCATION OF ALL UTILITIES, ABOVE & BELOW THE GROUND SURFACE, PRIOR TO START OF WORK, AND SHALL TAKE ADDITIONAL MEASURES AS REQUIRED TO ENSURE THAT UTILITIES ARE LOCATED IN ADVANCE OF ANY LAND DISTURBANCE. CONTRACTOR SHALL CONTACT THE STATE OF GEORGIA ONE CALL CENTER AT 1–800–282–7411 TO COORDINATE UTILITY LOCATION.
6. THE CONTRACTOR SHALL BE RESPONSIBLE FOR OBTAINING ALL NECESSARY PERMITS TO CONSTRUCT THIS PROJECT AS GOVERNED BY STATE & LOCAL AGENCIES, PRIOR TO STARTING CONSTRUCTION.
7. PROVIDE UNIFORM SLOPE OF ROADWAY BETWEEN ELEVATIONS INDICATED ON CENTERLINE. ALL ROADWAYS SHALL BE INVERTED CROWNED 1/4" PER FOOT UNLESS OTHERWISE INDICATED BY SPOT ELEVATIONS.
8. WITHIN THE LIMITS INDICATED ON THE DRAWING, THE CONTRACTOR SHALL PROVIDE NEW PAVEMENT IN ACCORDANCE WITH THE DRAWINGS AND DETAILS. FOR ADDITIONAL REQUIREMENTS, REFER TO THE SPECIFICATIONS.
9. UTILITY SERVICES SHALL BE MAINTAINED THROUGH OUT CONSTRUCTION.
10. ALL NEW BUILDINGS, STRUCTURES, AND ROADWAYS SHALL BE LOCATED BY THE COORDINATES AND DIMENSIONS GIVEN ON THE SITE LAYOUT AND DIMENSION PLAN.
11. EXISTING TREES, BUSHES, AND SHRUBS SHALL BE PROTECTED BY CONTRACTOR FROM ALL DAMAGE UNLESS IN DIRECT CONFLICT WITH NEW STRUCTURES, ROADWAYS, OR PATHS. CONTRACTOR TO REFER TO PLANS FOR TREE SAVE AND TREE REPLACEMENT REQUIRED.
12. UNPAVED AREAS DISTURBED BY THE CONTRACTOR SHALL BE CLEARED AND GRUBBED IF REQUIRED, AND RESTORED WITH DISTURBED AREA STABILIZATION DETAILS (SHEET C–013).
13. THE CONTRACTOR IS RESPONSIBLE FOR VERIFYING THE ACCURACY OF ALL BENCHMARK ELEVATIONS.
14. THE ENGINEER MAY DIRECT THE CONTRACTOR TO VARY THE WORK DURING CONSTRUCTION TO MEET EXISTING CONDITIONS.
15. EXCAVATION OF ANY TYPE SHALL BE ACCOMPLISHED IN SUCH A MANNER THAT UNDERGROUND UTILITIES OR STRUCTURES ARE NOT DAMAGED. ALL ROADWAYS, PARKING AREAS, SIDEWALKS, AND OTHER STRUCTURES DISTURBED BY CONSTRUCTION IN OR OUTSIDE THE PROJECT AREA SHALL BE RETURNED TO THEIR ORIGINAL CONDITION OR BETTER AND SHALL BE GRADED TO MEET CONSTRUCTION AS DIRECTED BY THE ENGINEER. ALL COSTS RELATED TO THE REPAIR OF DAMAGED UTILITIES SHALL BE BORNE BY THE CONTRACTOR.
16. ALL COVERS, FRAMES, AND GRATES FROM STRUCTURES WHICH ARE ABANDONED UNDER THIS CONTRACT SHALL BE PROTECTED FROM DAMAGE AND SHALL BE TURNED OVER TO THE CITY OF ATLANTA OR DISPOSED OF BY THE CONTRACTOR AS DIRECTED BY THE ENGINEER.
17. THE CONTRACTOR SHALL DIG TEST PITS AS DEEMED NECESSARY, AND AS DIRECTED BY THE ENGINEER, TO DETERMINE THE SIZE, LOCATION AND DEPTH OF EXISTING UNDERGROUND UTILITIES. ANY CONFLICTS NOTED IN CONSTRUCTION SHALL IMMEDIATELY BE BROUGHT TO THE ATTENTION OF THE ENGINEER.
18. ALL UTILITY BOXES, FRAMES, GRATES, ETC. NOT TO BE ABANDONED SHALL BE RESET TO THE PROPER GRADE.
19. THE CONTRACTOR SHALL FILL AND GRADE AREAS ADJACENT TO NEW CONSTRUCTION FOR POSITIVE DRAINAGE AND AS DIRECTED BY THE ENGINEER.
20. ALL WALKWAYS TO BE CONCRETE EXCEPT AS INDICATED OTHERWISE. MINIMUM WIDTH SHALL BE 4 FEET FOR NEW AND RECONSTRUCTED WALKWAYS, EXCEPT WHERE OTHERWISE INDICATED BY ENGINEER.
21. EROSION AND SEDIMENT CONTROL DEVICES MUST BE INSTALLED AND INSPECTED PRIOR TO ANY LAND DISTURBANCE ACTIVITIES AS REQUIRED BY THE GOVERNING JURISDICTION AND/OR THE ENGINEER.
22. FINAL GRADING PLAN FOR ALL PAVEMENT SHALL BE SUBMITTED BY THE CONTRACTOR FOR APPROVAL PRIOR TO INSTALLATION OF ANY PAVEMENT.
23. THERE ARE NUMEROUS REQUIREMENTS INVOLVING WORK SEQUENCE. REFER TO SPECIFICATIONS FOR DETAILED REQUIREMENTS.
24. THE CONTRACTOR IS RESPONSIBLE FOR COORDINATING THE LOCATION AND CONSTRUCTION ACTIVITIES WITH THE CITY, ENGINEER AND ABUTTING EASEMENT OWNERS TO MINIMIZE INTERFERENCE WITH EXISTING FACILITIES AND OPERATIONS. REFER TO SPECIFICATIONS FOR ADDITIONAL REQUIREMENTS.
25. ALL AREAS OF EXCAVATION, BACKFILL, FILL AND GRADING SHALL BE RETURNED TO THE ORIGINAL GRADE UNLESS OTHERWISE SHOWN ON THE DRAWINGS.
26. THE CONTRACTOR SHALL TAKE ALL NECESSARY MEASURES AND SHALL PROVIDE ALL NECESSARY CONTINUOUS BARRIERS OF SUFFICIENT TYPE, SIZE AND STRENGTH TO PREVENT ACCESS TO ALL OPEN EXCAVATIONS AT THE COMPLETION OF EACH DAY'S WORK. REFER TO SPECIFICATIONS FOR ADDITIONAL REQUIREMENTS.
27. ALL WALL AND SLAB PENETRATIONS SHALL BE SEALED WATERTIGHT.
28. STOCKPILING OF CONSTRUCTION MATERIALS WITHIN 100 FT. OF WETLANDS IS PROHIBITED. A WETLAND STUDY WAS PERFORMED FOR THE AREAS OF WORK ON MARCH 2016, BY ARCADIS/BPA AND, NO WETLANDS WERE IDENTIFIED IN THOSE AREAS.
29. DELINEATION OF WATERS OF THE STATE & U.S. CONDUCTED ON MARCH 16, 2016 BY ARCADIS/BPA.

SITE LAYOUT & DIMENSION NOTES:

1. THE CONTRACTOR SHALL UTILIZE SITE DIMENSION AND LAYOUT PLANS TO LOCATE THE BUILDING CORNERS, AS WELL AS OTHER FACILITIES OUTSIDE THE BUILDINGS. THE CONTRACTOR SHALL USE THE STRUCTURAL PLANS TO STAKEOUT THE BUILDINGS PROPER, OFFSETS, OPENINGS, SERVICE AREAS, ETC.

GEOTECHNICAL NOTES:

1. ANY LOOSE SAND, SOFT SILT AND CLAY, OR OTHER SOFT MATERIALS ENCOUNTERED AT THE FINAL EXCAVATION LEVEL SHALL BE REMOVED TO REACH A FIRM SUBGRADE AND BACKFILLED WITH EITHER CONTROLLED SELECTED FILL, STRUCTURAL FILL/BACKFILL, AND/OR COARSE AGGREGATE MATERIAL(S) AND COMPACTED, CONFORMING TO SPECIFICATIONS.
2. ALL EXCAVATIONS AND BACKFILLING SHALL BE PERFORMED IN DRY CONDITIONS.
3. EXCAVATION SUPPORT SYSTEM (SHEETING) SHALL BE UTILIZED AT LOCATIONS WHERE THE EXCAVATION LEVEL IS BELOW THE LEVEL OF ADJACENT EXISTING FOUNDATIONS OR UTILITIES AND PER THE SPECIFICATIONS. LATERAL EXTENT OF SHEETING SHALL BE ESTABLISHED BY THE CONTRACTOR'S SHEETING DESIGNER.
4. SHEETING SHALL BE DESIGNED FOR LATERAL LOADS FROM EARTH, GROUNDWATER, ADJACENT FOUNDATION LOAD, SURCHARGE, AND EQUIPMENT LOAD. THE DESIGN SHALL BE PERFORMED BY A PROFESSIONAL ENGINEER REGISTERED IN THE STATE OF GEORGIA.

OUTSIDE PIPING NOTES:

1. ALL ABANDONED PIPES SHALL BE GROUT FILLED AND DISCONNECTED AT THE OUTSIDE WALL OF THE STRUCTURE. ALL OPEN ENDS OF ABANDONED PIPES SHALL BE PLUGGED AS DIRECTED.
2. ALL PIPES SHALL SLOPE UNIFORMLY BETWEEN ELEVATIONS SHOWN UNLESS OTHERWISE INDICATED ON THE DRAWINGS OR DIRECTED BY THE ENGINEER. NO SAGS OR CRESTS IN PIPING WILL BE PERMITTED.
3. JOINTS SHALL BE PROVIDED AT THE WALL OF STRUCTURES ON ALL PIPELINES, EXCEPT WHERE SLEEVES ARE INDICATED. THIS SHALL BE ACCOMPLISHED BY CASTING A BELL WALL FITTING, BELL END STUB, OR WALL CASTING INTO THE STRUCTURE.
4. ALL PIPES SHALL HAVE 3'–0" MINIMUM COVER UNLESS REQUIRED BY CITY OF ATLANTA STANDARDS, SPECIFICALLY INDICATED OTHERWISE, OR DIRECTED BY THE ENGINEER.
5. SEE MECHANICAL DRAWINGS FOR PIPE ELEVATIONS AT WALLS OF STRUCTURES.
6. ALL BENDS, VALVES, DEAD–ENDS AND TEES IN PRESSURIZED LINES SHALL BE MECHANICALLY RESTRAINED JOINTS. BLOCKING IS ALSO REQUIRED FOR ALL TEES (INCLUDING TAPPING SLEEVES) AND BENDS.
7. PROVIDE RESTRAINED JOINTS FOR ALL NEW DUCTILE IRON PIPE, UNLESS OTHERWISE INDICATED OR DIRECTED BY THE ENGINEER.
8. PROVIDE FITTINGS AT ALL POINTS OF CONNECTION BETWEEN NEW AND EXISTING WORK.
9. ALL PIPING UNDER STRUCTURES SHALL BE ENCASED IN CONCRETE.
10. SEE MECHANICAL DRAWINGS FOR PIPE ELEVATIONS NOT SHOWN ON THE OUTSIDE PIPING PLANS.
11. ALL UNDERGROUND UTILITIES "LYING UNDER" OR "CROSSING" PAVED AREAS SHALL BE "IN–PLACE" PRIOR TO INSTALLING BASE & PAVEMENT.
12. WATER, STORM DRAINAGE AND SANITARY SEWER WORK SHALL BE DONE IN STRICT ACCORDANCE WITH THE STANDARDS & REGULATIONS OF THE CITY.
13. THE TOP ELEVATION OF ALL MANHOLES AND/OR JUNCTION BOXES CONSTRUCTED IN OPEN OR GRASSED AREAS SHALL BE 2 FOOT ABOVE FINISHED GRADE.
14. THE TOP ELEVATION OF ALL MANHOLES AND/OR JUNCTION BOXES CONSTRUCTED IN PAVED AREAS SHALL MATCH FINISHED GRADE.
15. CONTRACTOR SHALL INSTALL THE WATER SERVICE & MAKE THE TAP TO THE EXISTING MAIN.
16. THE CONTRACTOR SHALL NOTIFY THE CITY PRIOR TO INITIATING CONSTRUCTION ON THE WATER SYSTEM AND SHALL BE RESPONSIBLE FOR ISOLATING THE PROJECT AREA FROM THE REMAINDER OF THE SYSTEM.
17. THE MINIMUM HORIZONTAL DISTANCE BETWEEN A WATER & SEWER LINE SHALL BE TEN FEET, THE MINIMUM VERTICAL SEPARATION SHALL BE 18 INCHES. SEE DETAILS FOR FURTHER REQUIREMENTS.
18. FOR PIPE BEDDING AND INSTALLATION DEPTH OF PIPE REQUIREMENTS, REFERENCE SPECIFICATIONS & CIVIL PLANS & DETAILS.

GRADING & DRAINAGE NOTES:

1. FINISHED GRADE CONTOURS ARE SHOWN @ 1 FT INTERVALS (0.5 FT INTERVAL SHOWN AT SLUDGE DEWATERING BUILDING). ELEVATIONS ARE BASED ON TOPOGRAPHIC SURVEY FURNISHED BY ARCADIS & COA RECORD DRAWINGS.
2. ALL AREAS DISTURBED DURING GRADING OPERATIONS AND NOT PAVED SHALL RECEIVE TOPSOIL, SEEDING & MULCH IN ACCORDANCE WITH DETAILS AND SPECIFICATIONS.
3. TOPSOIL SHALL BE "STRIPPED" AND STOCKPILED. TOPSOIL SHALL BE USED TO ACHIEVE THE LAST 4"–6" OF FINISHED GRADE AS FINAL GRADING OPERATIONS PROGRESS. SEE SPECIFICATIONS.
4. CONTOURS & FINISHED SPOT ELEVEVATIONS REPRESENT FINISHED GRADE, TOP OF CONCRETE, PAVEMENT, GRASSED AREAS, ETC.
5. GRADING OPERATIONS SHALL BE COORDINATED WITH THE IMPLEMENTATION OF THE "EROSION & SEDIMENTATION CONTROL" PLAN.
6. THE CONTRACTOR SHALL BE RESPONSIBLE FOR CLEARING AND GRUBBING TO 10' (MINIMUM) BEYOND THE GRADING LIMITS (TOE/TOP OF SLOPE).
7. CLASSIFICATION OF EXCAVATED MATERIALS: REGARDLESS OF THE MATERIALS ENCOUNTERED, ALL EXCAVATION SHALL BE "UNCLASSIFIED". IT SHALL BE UNDERSTOOD THAT ANY REFERENCE TO ROCK, EARTH OR ANY OTHER MATERIAL IS TO BE CONSIDERED AS "UNCLASSIFIED" MATERIALS. NO SEPARATE PAYMENT WILL BE MADE FOR EITHER ROCK, EARTH OR OTHER MATERIAL.
8. GRADING OPERATIONS SHALL BE PERFORMED IN SUCH A MANNER AS TO ALLOW FOR AMPLE QUANTITIES OF "SELECTED SOILS" TO BE HELD IN RESERVE OR STOCKPILED AS NECESSARY, TO PROVIDE THE REQUIRED MATERIALS FOR BACKFILLING "UNDER–CUT" AREAS. NO DIRECT PAYMENT WILL BE MADE FOR SUCH NECESSARY MANIPULATION AS DOUBLE HANDLING OR HAULING.
9. IMPLEMENTATION OF THE EROSION & SEDIMENTATION CONTROL PLAN SHALL BEGIN PRIOR TO CONSTRUCTION OPERATIONS.
10. CARE SHALL BE TAKEN DURING GRADING OPERATIONS SO AS NOT TO EXCEED THE PROPERTY AND EASEMENT OR CONSTRUCTION LIMIT BOUNDARIES.

CIVIL ABBREVIATIONS

AR	RED MAPLE 'OCTOBER GLORY'
CC	REDBUD 'FOREST PANSY'
CP	CONTROL POINT
CS	COMBINED SEWER
CSO	COMBINED SEWER OVERFLOW
CU	COPPER
DI	DROP INLET
DIP	DUCTILE IRON PIPE
DR	DRAIN LINE
FFE	FINISHED FLOOR ELEVATION
FG	FINISHED GRADE
FL	FLUME
GR	GRIT LINE
HDPE	HIGH DENSITY POLYETHYLENE
HP	HIGH POINT
IX	'NELLIE R. STEVENS' HOLLY
MH	MANHOLE
PVC	POLYVINYL CHLORIDE
RCP	REINFORCED CONCRETE PIPE
SAN	SANITARY DRAIN LINE
SL	SLUDGE LINE
TI	TIE–IN
TBM	TEMPORARY BENCH MARK
TPF	TREE PROTECTION FENCE (CHAIN LINK)
TP	TOP OF PAVEMENT
TSW	TOP OF SIDEWALK
W1	NO. 1 POTABLE WATER
W2	NO. 2 POTABLE BACKFLOW PREVENTED
W3	NO. 3 NON–POTABLE CHLORINATED EFFLUENT PLANT
W4	NO. 4 NON–POTABLE
WM	WATER METER
WRC	WATER RECLAMATION CENTER
WV	WATER VALVE
YI	YARD INLET
YH	YARD HYDRANT

CIVIL LEGEND:

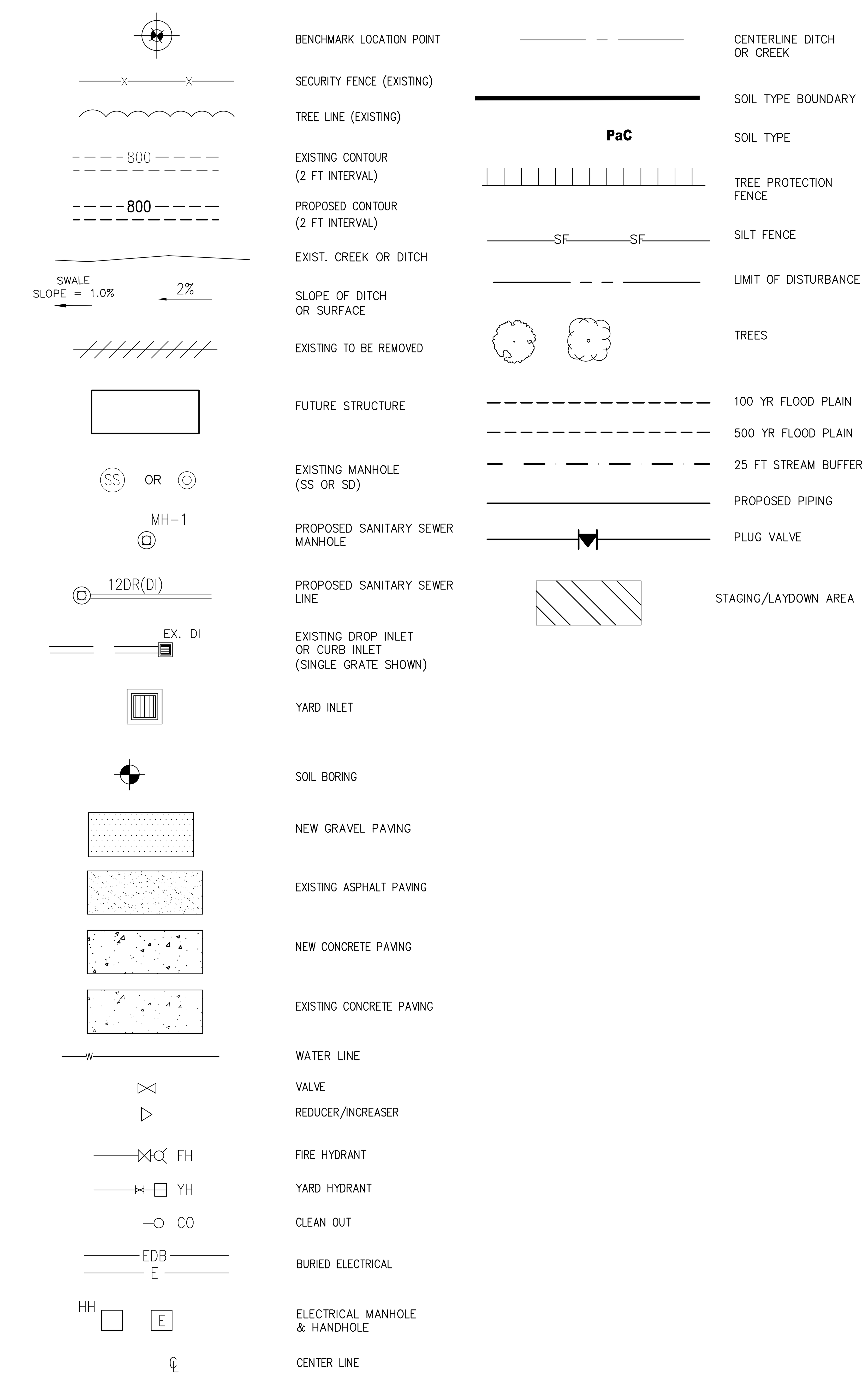

COPYRIGHT: ARCADIS U.S., INC. 2016

IF THIS BAR IS NOT 1" INDICATED SCALE IS INCORRECT

NO.	DATE	ISSUED FOR	BY
0	JUL 2019	BIDDING	HG

SEALS

GEORGIA REGISTERED 07-31-2019 No. 033633 PROFESSIONAL ENGINEER ALTARRAL HAGEN, II

ARCADIS BPA A Joint Venture
2839 Paces Ferry Road
Suite 900
Atlanta, GA 30339
Tel: 770–431–8666
Fax: 770–435–2666
www.arcadis–us.com

RESURGENS 1847 1865 ATLANTA, GA.

ATLANTA, GEORGIA
CITY OF ATLANTA
DEPARTMENT OF WATERSHED MANAGEMENT

EAST AREA WATER QUALITY CONTROL FACILITY IMPROVEMENTS

W.01.02.0085

SHEET TITLE

CIVIL LEGEND AND NOTES

DATE:	JULY 2019
PROJECT NO.:	GABPA134
DESIGNED BY:	W. HACKETT
DRAWN BY:	J. BROWN
CHECKED BY:	A. SHARP

SCALE: NONE

C–001

User: TTHOMAS Spec: AUS–NCSMOD File: I:\ACAD\PROJ\GABPA134 – CSO GROUP 1\BID PACKAGE 2\SHEETS\CIVIL\C–001.DWG Scale:1:1 SavedDate: 7/29/2019 Time:11:08 Plot Date: Thomas, Travis; 7/30/2019; 08:42 ; Layout:6

SLUDGE DEWATERING BUILDING
(EXISTING CENTRIFUGE PLATFORM
TO BE DEMOLISHED)

BIORETENTION
AREA (BMP#1)

LIMITS OF ASPHALT
RESTORATION

STAGING/LAYDOWN AREA
(EXISTING PAVED AREA)

C-007/C-011

PROP. HEAVY-DUTY ASPHALT

SLUDGE
HOLDING TANK
NO. 1

TO SOUTH RIVER
PUMP STATION

INFLUENT JUNCTION BOX NO. 2

DIGESTER

SOLIDS PROCESSING PUMP STATION

C-006/C-010

STAGING/LAYDOWN AREA
(EXISTING GRASSED AREA)

SANITARY PUMP STATION

TB1 - SW CORNER OF PAD
PLANT NORTH
N: 10006.11
E: 5474.83
Z: 808.01
GRID NORTH
N: 1347293.31
E: 2245450.99
Z: 808.01

500 YR FLOOD PLAIN

100 YR FLOOD PLAIN

WASTE WASHWATER
PUMP STATION

FILTER
BUILDING
(AND
DISINFECTION)

INFLUENT JUNCTION
BOX NO. 1

DETRITUS TANK NO. 1

GRIT PUMP
STATION NO. 1

SEDIMENTATION
BASIN NO. 1

GRIT SETTLING
TANK NO. 1

SWITCHGEAR /BLDG
XFMR

SLUDGE
PUMP
STATION

RAPID MIX TANK

OLD
VORTEX
BUILDING

C-005/C-009

SEDIMENTATION
BASIN NO. 2

GRIT PUMP
STATION NO. 2

GRIT SETTLING
TANK NO. 2

STAGING/LAYDOWN AREA
(EXISTING PAVED AREA)

DETRITUS TANK NO. 2

ELECTRICAL
BUILDINGS

VORTEX SEPARATOR

HEAD BOX

VALVE VAULT

TUNNEL
PUMP
STATION

EFF PARSHALL
FLUME

INTRENCHMENT CREEK ℄

25 FT STREAM BUFFER

500 YR FLOOD PLAIN

100 YR
FLOOD
PLAIN

SLUDGE DEWATERING BUILDING
STAKING COORDINATES

BUILDING	NORTHING	EASTING
NE CORNER	1347617.78	2245846.37
NW CORNER	1347577.01	2245881.53
SW CORNER	1347534.35	2245832.51
SE CORNER	1347575.78	2245796.78

ASPHALT STAKING COORDINATES

NAME	NORTHING	EASTING	TYPE	LENGTH	BEARING
L1	1347504.50	2245825.78			
			LINE	17.27	N10° 55' 00.87"W
L2	1347521.45	2245822.51			
			LINE	14.93	N40° 36' 58.18"W
L3	1347532.79	2245812.79			
			LINE	21.73	S48° 38' 18.16"W
L4	1347518.43	2245796.48			
			LINE	37.83	N40° 52' 03.83"W
C1	1347547.04	2245771.73			
			CURVE	L=39.96 R=25.50	
L5	1347582.93	2245774.45			
			LINE	8.648	N49° 13' 40.91"W
L6	1347592.66	2245785.72			
			LINE	52.804	N49° 13' 40.91"W
C2	1347625.67	2245824.09			
			CURVE	L=23.82 R=15.50	
L7	1347623.73	2245846.26			
			LINE	34.37	S42° 44' 07.30"E
L8	1347599.22	2245868.91			
			LINE	29.58	S41° 44' 08.75"E
L9	1347577.08	2245888.67			
			LINE	15.56	S41° 50' 33.04"W
C3	1347565.54	2245899.00			
			CURVE	L=21.36 R=27.00	

NOTES:
1. ACCESS TO ALL PLANT FACILITES AND OPERATIONS WILL BE MAINTAINED AT ALL TIMES.
2. REPLACE EXISTING HD ASPHALT IF DAMAGED AND ADJACENT TO TRUCK LOADING AREA.
3. SEE SHEET C-011 FOR BORING LOCATIONS.

REFERENCE DRAWINGS: INTRENCHMENT CREEK COMBINED SEWER OVERFLOW TREATMENT FACILITY, 1981 & 2002.

0 50' 100'

COPYRIGHT:
ARCADIS U.S., INC.
2016

IF THIS BAR IS NOT 1"
INDICATED SCALE
IS INCORRECT

NO.	DATE	ISSUED FOR	BY
0	JUL 2019	BIDDING	HG

SEALS

GEORGIA REGISTERED 07-31-2019 No. 033833 PROFESSIONAL ENGINEER ALTARRAL HAGEN II

ARCADIS
BPA
A Joint Venture
2839 Paces Ferry Road
Suite 900
Atlanta, GA 30339
Tel: 770-431-8666
Fax: 770-435-2666
www.arcadis-us.com

ATLANTA, GEORGIA
CITY OF ATLANTA
DEPARTMENT OF WATERSHED MANAGEMENT

EAST AREA WATER QUALITY CONTROL
FACILITY IMPROVEMENTS

W.01.02.0085

SHEET TITLE

EAWQCF SITE AND LAYDOWN AREA PLAN

DATE: JULY 2019
PROJECT NO.: GABPA134
DESIGNED BY: W. HACKETT
DRAWN BY: J. BROWN
CHECKED BY: A. SHARP

SCALE: 1" = 50'

C-002

SHEET 7 OF 150

User: TTHOMAS Spec: AUS-NCSMOD File: I:\ACAD\PROJ\GABPA134 - CSO GROUP 1\BID PACKAGE 2\SHEETS\CIVIL\C-002.DWG Scale: 1:1 SavedDate: 5/30/2019 Time: 10:20 Plot Date: Thomas, Travis; 7/30/2019; 08:42 ; Layout: 7

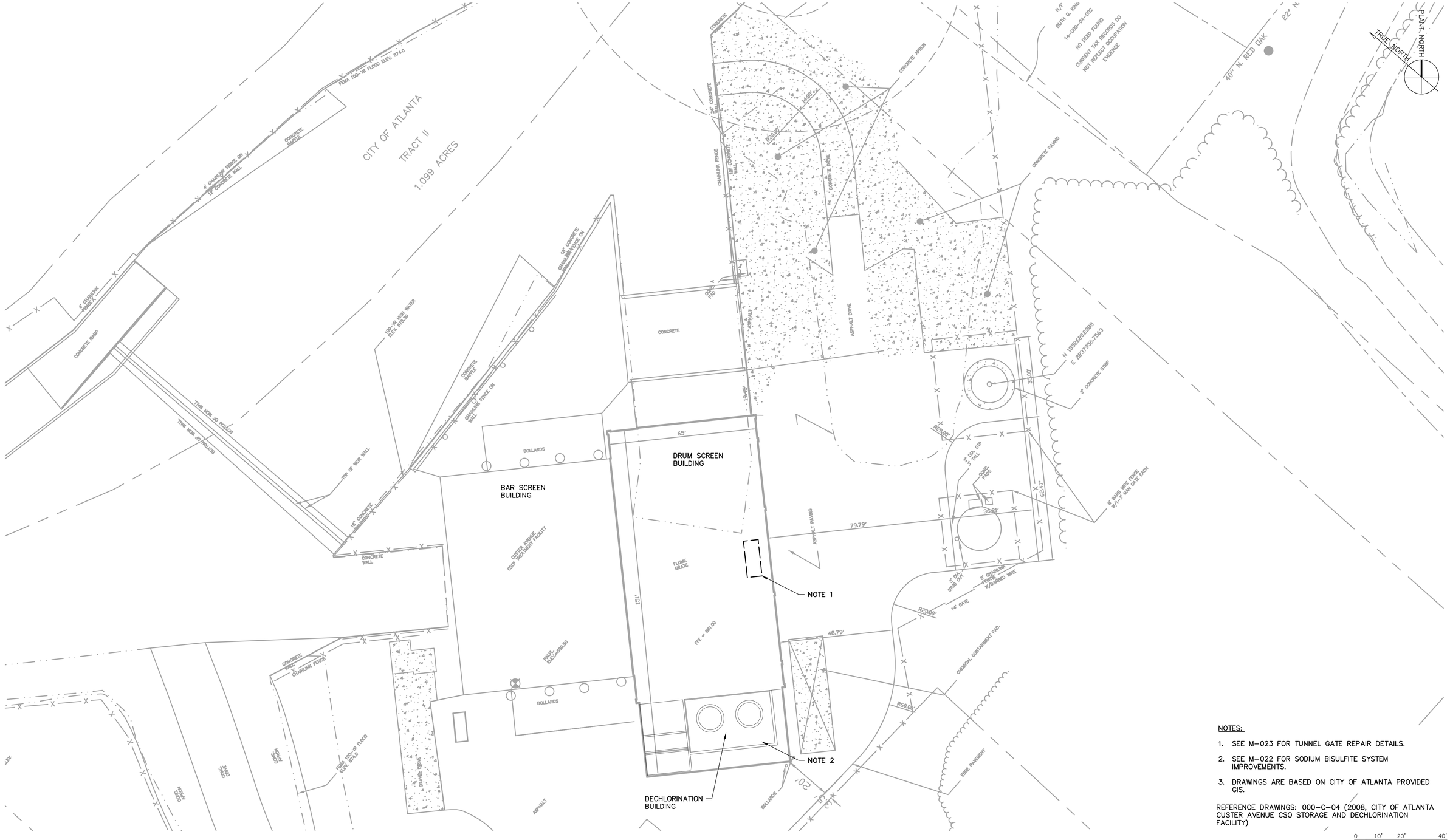

NOTES:

1. SEE M-023 FOR TUNNEL GATE REPAIR DETAILS.
2. SEE M-022 FOR SODIUM BISULFITE SYSTEM IMPROVEMENTS.
3. DRAWINGS ARE BASED ON CITY OF ATLANTA PROVIDED GIS.

REFERENCE DRAWINGS: 000-C-04 (2008, CITY OF ATLANTA CUSTER AVENUE CSO STORAGE AND DECHLORINATION FACILITY)

0 10' 20' 40'

COPYRIGHT:
ARCADIS U.S., INC.
2016

IF THIS BAR IS NOT 1" INDICATED SCALE IS INCORRECT

NO.	DATE	ISSUED FOR	BY
0	JUL 2019	BIDDING	HG

SEALS

GEORGIA REGISTERED 07-31-2019 No. 033633 PROFESSIONAL ENGINEER ALI ARRAL HAGEN II

ARCADIS
BPA
A Joint Venture
2839 Paces Ferry Road
Suite 900
Atlanta, GA 30339
Tel: 770-431-8666
Fax: 770-435-2666
www.arcadis-us.com

ATLANTA, GEORGIA
CITY OF ATLANTA
DEPARTMENT OF WATERSHED MANAGEMENT

EAST AREA WATER QUALITY CONTROL FACILITY IMPROVEMENTS

W.01.02.0085

SHEET TITLE

CUSTER AVENUE SITE PLAN

DATE:	JULY 2019
PROJECT NO.:	GABPA134
DESIGNED BY:	M. BRONSTEIN
DRAWN BY:	J. BROWN
CHECKED BY:	A. SHARP

SCALE: 1" = 20'

C-003

SHEET 8 OF 150

User:THOMAS Spec:AUS-NCSMOD File:I:\ACAD\PROJ\GABPA134 - CSO GROUP 1\BID PACKAGE 2\SHEETS\CIVIL\C-003.DWG Scale:1:1 SavedDate:5/30/2019 Time:09:26 Plot Date: Thomas, Travis; 7/30/2019; 08:43 ; Layout:8

WILLMER ENGINEERING INC. | WE

Project: East Area WQCF Treatment Plant
Location: **City of Atlanta, DeKalb County, Georgia**
Project Number: **71.4068**

HOLE No. EAB-1

Sheet 1 of 1
Location: **See Figure 2**

Azimuth: **--** Angle from Horizontal: **90** Surface Elevation (ft): **825.78** Station: **N/A**
Drilling Equipment: **CME-550X ATV** Drilling Method: **HSA - Manual Hammer**
Core Boxes: **N/A** Samples: **12** Overburden (ft): **N/A** Rock (ft): **N/A** Total Depth (ft): **50.0**
Logged By: **G. Hoffman** Date Drilled: **9/14/15**

VERTICAL DEPTH (ft)	GRAPHIC LOG	SAMPLE TYPE	REC%	RQD %	MATERIAL DESCRIPTION	ELEVATION (feet)	STANDARD PENETRATION TEST DATA (blows/foot) 5 10 20 40 60 80	N-VALUE
		DCP			ASPHALT = 3"	825.8		
		DCP			GRADED AGGREGATE BASE = 10"	825		15
5		SS			FILL: Medium dense brown silty medium to fine **SAND** with rock fragments	820		8
		SS			Loose reddish brown clayey medium to fine **SAND** with rock fragments			8
10		SS			RESIDUUM: Firm reddish brown medium to fine sandy **SILT** (micaceous)	815		12
15		SS			Medium dense and dense black and tan silty medium to fine **SAND** (micaceous)			40
		SS			- becomes brown and tan	810		29
20					- becomes tannish brown and sand becomes fine			
25		SS				805		40
		SS				800		12
30						795		
35		SS			- becomes tan and dark brown	790		15
40		SS			- becomes grey, brown, and white	785		36
45		SS			PARTIALLY WEATHERED ROCK: Sampled as very dense grey and white silty medium to fine **SAND** with rock fragments (slightly micaceous to micaceous) **PWR**	780		50/4"
50		SS			Boring was termintated at 50 feet below the existing ground surface.			50/6"

The top 5 feet of the boring was advanced using a hand auger with dynamic cone penetrometer (DCP) testing. The DCP blow counts were converted to SPT N-values using available correlations.

Groundwater was encountered at 23 feet below the existing ground surface at the time of boring completion.

SAMPLER TYPE
SS - Split Spoon; ST - Shelby Tube; NQ - Rock Core, 1-7/8"; NX - Rock Core, 2-1/8"; CU - Cuttings; CT - Continuous Tube

DRILLING METHOD
HSA - Hollow Stem Auger; CFA - Continuous Flight Augers; DC - Driving Casing; RW - Rotary Wash; RC - Rock Core

Hole No. **EAB-1**

SPTN_71.4068 LAST AREA GSO.GPJ 9/29/15

WILLMER ENGINEERING INC. | WE

Project: East Area WQCF Treatment Plant
Location: **City of Atlanta, DeKalb County, Georgia**
Project Number: **71.4068**

HOLE No. EAB-2

Sheet 1 of 1
Location: **See Figure 2**

Azimuth: **--** Angle from Horizontal: **90** Surface Elevation (ft): **826.00** Station: **N/A**
Drilling Equipment: **CME-550X ATV** Drilling Method: **HSA - Manual Hammer**
Core Boxes: **N/A** Samples: **6** Overburden (ft): **16** Rock (ft): **N/A** Total Depth (ft): **16.0**
Logged By: **G. Hoffman** Date Drilled: **9/14/15**

VERTICAL DEPTH (ft)	GRAPHIC LOG	SAMPLE TYPE	REC%	RQD %	MATERIAL DESCRIPTION	ELEVATION (feet)	STANDARD PENETRATION TEST DATA (blows/foot) 5 10 20 40 60 80	N-VALUE
		DCP			ASPHALT = 5"	826.0		
		DCP			GRADED AGGREGATE BASE = 8"	825		11
5		DCP			FILL: Medium dense to very loose brown silty medium to fine **SAND** (slightly micaceous)			4
		SS			Loose clayey medium to fine **SAND** with rock fragments	820		8
10		SS			- becomes brown without rock fragments			5
					Very loose black and light brown silty medium to fine **SAND**	815		4
15		SS			ALLUVIUM: Loose grey silty medium to fine **SAND** (micaceous)			7
					Auger refusal was encountered at 16 feet below the exising ground surface.	810		

The top 5 feet of the boring was advanced using a hand auger with dynamic cone penetrometer (DCP) testing. The DCP blow counts were converted to SPT N-values using available correlations.

Groundwater was encountered at 11.5 feet below the existing ground surface at the time of boring completion.

SAMPLER TYPE
SS - Split Spoon; ST - Shelby Tube; NQ - Rock Core, 1-7/8"; NX - Rock Core, 2-1/8"; CU - Cuttings; CT - Continuous Tube

DRILLING METHOD
HSA - Hollow Stem Auger; CFA - Continuous Flight Augers; DC - Driving Casing; RW - Rotary Wash; RC - Rock Core

Hole No. **EAB-2**

SPTN_71.4068 LAST AREA GSO.GPJ 9/29/15

NOTES: SEE SHEET C-011 FOR BORE LOCATIONS

COPYRIGHT: ARCADIS U.S., INC. 2016

IF THIS BAR IS NOT 1" INDICATED SCALE IS INCORRECT

NO.	DATE	ISSUED FOR	BY
0	JUL 2019	BIDDING	HG

SEALS

GEORGIA REGISTERED 07-31-2019 No. 033633 PROFESSIONAL ENGINEER ALFARRAL HAGEN, II

ARCADIS BPA A Joint Venture
2839 Paces Ferry Road
Suite 900
Atlanta, GA 30339
Tel: 770-431-8666
Fax: 770-435-2666
www.arcadis-us.com

ATLANTA, GEORGIA
CITY OF ATLANTA
DEPARTMENT OF WATERSHED MANAGEMENT

EAST AREA WATER QUALITY CONTROL FACILITY IMPROVEMENTS

W.01.02.0085

SHEET TITLE
PROPOSED SLUDGE DEWATERING BUILDING BORING LOGS

DATE: JULY 2019
PROJECT NO.: GABPA134
DESIGNED BY: W. HACKETT
DRAWN BY: J. BROWN
CHECKED BY: W. GRUBBS

SCALE: NONE

C-004

SHEET 9 OF 150

User: TTHOMAS Spec: AUS-NCSM0D File: I:\ACAD\PROJ\GABPA134 - CSO GROUP 1\BID PACKAGE 2\SHEETS\CIVIL\C-004.DWG Scale: 1:1 SavedDate: 3/19/2019 Time: 09:47 Plot Date: Thomas, Travis; 7/30/2019; 08:43 ; Layout: 9

MATCHLINE (SEE SHEET C-006)

THE PROJECT REQUIRES APPROXIMATELY 677 SQUARE YARDS OF ASPHALT TO BE DEMOLISHED AND REPLACED.

APPROXIMATELY 738' OF EXISTING 8" SLUDGE LINE FROM SEDIMENTATION BASIN TO SLUDGE HOLDING TANK.

SLUDGE PUMP STATION

SEDIMENTATION BASIN NO. 2

RAPID MIX TANK

GRIT SETTLING TANK NO. 2

DETRITUS TANK NO. 2

GRIT PUMP STATION NO. 2

OLD VORTEX BUILDING

VORTEX SEPARATOR HEAD BOX

EFF PARSHALL FLUME

VALVE VAULT

TUNNEL PUMP STATION

ELECTRICAL BUILDING

500 YR FLOOD PLAIN

100 YR FLOOD PLAIN

25 FT STREAM BUFFER

INTRENCHMENT CREEK

NOTE 1

EAST 5200

EAST 5400

EAST 5600

NORTH 9800

NORTH 9600

802

804

806

808

800

EXISTING CONDITION SHOWN FROM THE FOLLOWING REFERENCE BACKGROUND SOURCES:

1. 1981 DRAWING SET – INTRENCHMENT COMBINED SEWER OVERFLOW TREATMENT FACILITY
2. 2002 DRAWING SET – EAST AREA CSO & INTRENCHMENT WRCF IMPROVEMENTS
3. 2008 DRAWING SET – INTRENCHMENT CREEK CSO TREATMENT PLANT VOLUME 4 OF 4

NOTES:

1. DEMOLISH AND REPLACE SECTIONS OF TUNNEL PUMP STATION OUTFALL AS SHOWN ON DRAWING S-010 AND S-011.

INSET A

SCALE: 1" = 30'

0 24' 48' 72'

SCALE: 1" = 20'

0 10' 20' 40'

COPYRIGHT: ARCADIS U.S., INC. 2016

IF THIS BAR IS NOT 1" INDICATED SCALE IS INCORRECT

NO.	DATE	ISSUED FOR	BY
0	JUL 2019	BIDDING	HG

SEALS

GEORGIA REGISTERED 07-31-2019 No. 033633 PROFESSIONAL ENGINEER ALI FARRAH HAGEN, II

ARCADIS BPA A Joint Venture
2839 Paces Ferry Road
Suite 900
Atlanta, GA 30339
Tel: 770-431-8666
Fax: 770-435-2666
www.arcadis-us.com

ATLANTA, GEORGIA
CITY OF ATLANTA
DEPARTMENT OF WATERSHED MANAGEMENT

EAST AREA WATER QUALITY CONTROL FACILITY IMPROVEMENTS

W.01.02.0085

SHEET TITLE

DEMOLITION PLAN (1 OF 3)

DATE:	JULY 2019
PROJECT NO.:	GABPA134
DESIGNED BY:	W. HACKETT
DRAWN BY:	J. BROWN
CHECKED BY:	A. SHARP

SCALE: AS SHOWN

C-005

SHEET 10 OF 150

User: TTHOMAS Spec: AUS-NCSM0D File: I:\ACAD\PROJ\GABPA134 – CSO GROUP 1\BID PACKAGE 2\SHEETS\CIVIL\C-005.DWG Scale: 1:1 SavedDate: 5/29/2019 Time: 10:37 Plot Date: Thomas, Travis; 7/30/2019; 08:44 ; Layout: 10

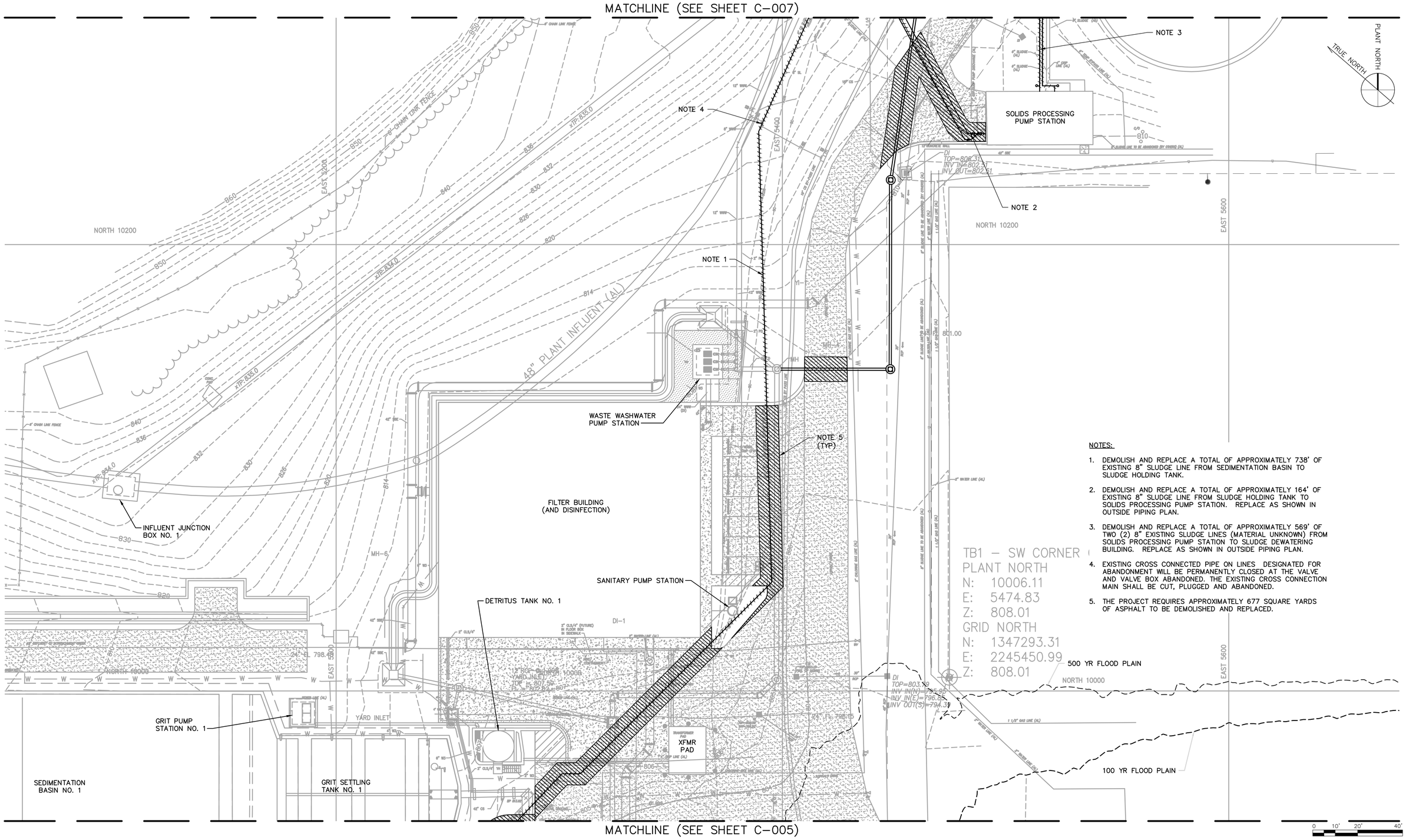

NOTES:

1. DEMOLISH AND REPLACE A TOTAL OF APPROXIMATELY 738' OF EXISTING 8" SLUDGE LINE FROM SEDIMENTATION BASIN TO SLUDGE HOLDING TANK.
2. DEMOLISH AND REPLACE A TOTAL OF APPROXIMATELY 164' OF EXISTING 8" SLUDGE LINE FROM SLUDGE HOLDING TANK TO SOLIDS PROCESSING PUMP STATION. REPLACE AS SHOWN IN OUTSIDE PIPING PLAN.
3. DEMOLISH AND REPLACE A TOTAL OF APPROXIMATELY 569' OF TWO (2) 8" EXISTING SLUDGE LINES (MATERIAL UNKNOWN) FROM SOLIDS PROCESSING PUMP STATION TO SLUDGE DEWATERING BUILDING. REPLACE AS SHOWN IN OUTSIDE PIPING PLAN.
4. EXISTING CROSS CONNECTED PIPE ON LINES DESIGNATED FOR ABANDONMENT WILL BE PERMANENTLY CLOSED AT THE VALVE AND VALVE BOX ABANDONED. THE EXISTING CROSS CONNECTION MAIN SHALL BE CUT, PLUGGED AND ABANDONED.
5. THE PROJECT REQUIRES APPROXIMATELY 677 SQUARE YARDS OF ASPHALT TO BE DEMOLISHED AND REPLACED.

COPYRIGHT:
ARCADIS U.S., INC.
2016

IF THIS BAR IS NOT 1" INDICATED SCALE IS INCORRECT

NO.	DATE	ISSUED FOR	BY
0	JUL 2019	BIDDING	HG

SEALS

GEORGIA REGISTERED 07-31-2019 No. 033633 PROFESSIONAL ENGINEER ALTARRAL HAGEN, II

ARCADIS BPA
A Joint Venture
2839 Paces Ferry Road
Suite 900
Atlanta, GA 30339
Tel: 770-431-8666
Fax: 770-435-2666
www.arcadis-us.com

ATLANTA, GEORGIA
CITY OF ATLANTA
DEPARTMENT OF WATERSHED MANAGEMENT

EAST AREA WATER QUALITY CONTROL FACILITY IMPROVEMENTS

W.01.02.0085

SHEET TITLE

DEMOLITION PLAN (2 OF 3)

DATE:	JULY 2019
PROJECT NO.:	GABPA134
DESIGNED BY:	W. HACKETT
DRAWN BY:	R. KUNZ
CHECKED BY:	A. SHARP

SCALE: 1" = 20'

C-006

SHEET 11 OF 150

User: TTHOMAS Spec: AUS-NCSMOD File: I:\ACAD\PROJ\GABPA134 - CSO GROUP 1\BID PACKAGE 2\SHEETS\CIVIL\C-006.DWG Scale: 1:1 SavedDate: 5/29/2019 Time: 10:41 Plot Date: Thomas, Travis; 7/30/2019; 08:44 ; Layout: 11

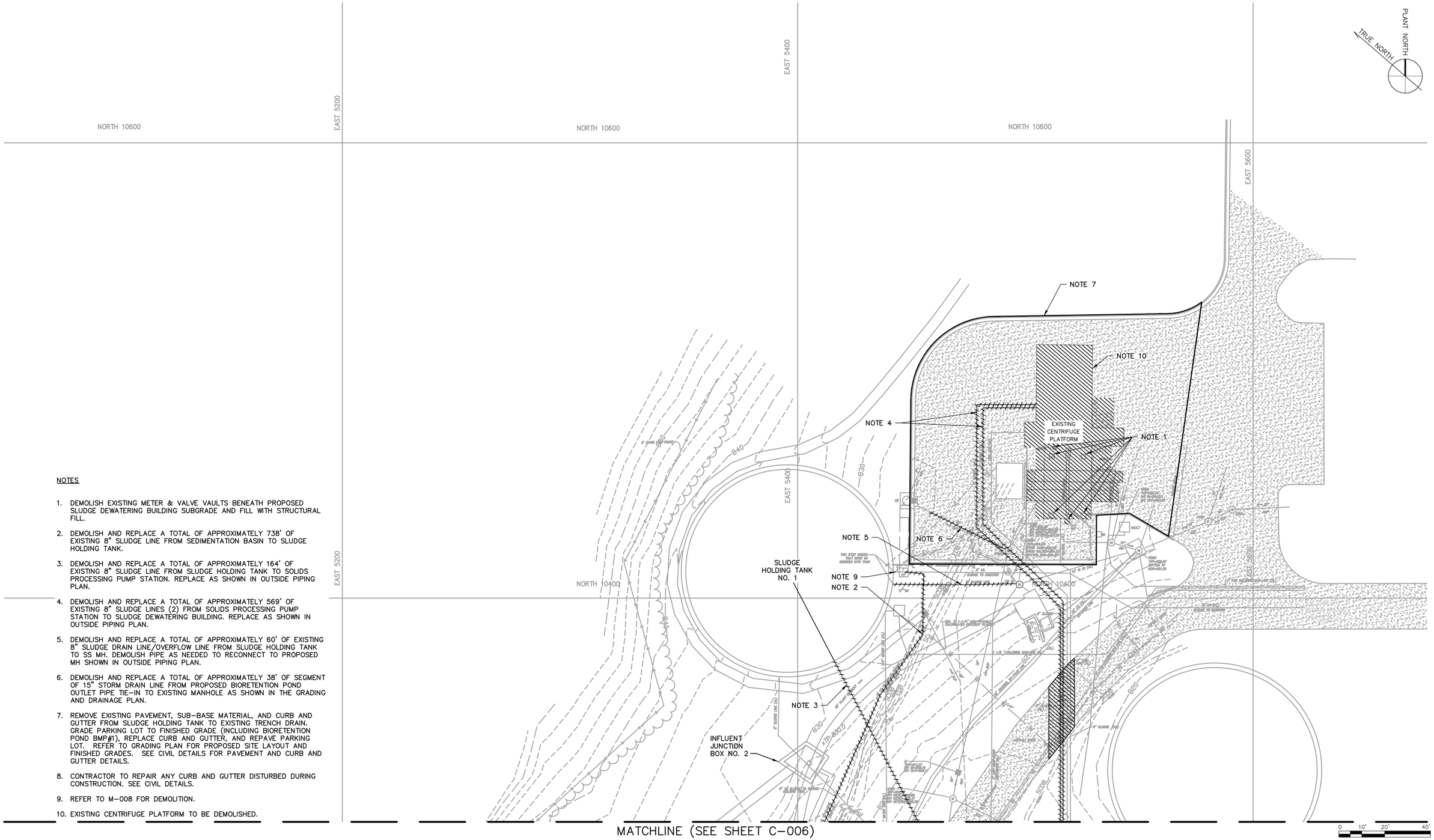

NOTES

1. DEMOLISH EXISTING METER & VALVE VAULTS BENEATH PROPOSED SLUDGE DEWATERING BUILDING SUBGRADE AND FILL WITH STRUCTURAL FILL.
2. DEMOLISH AND REPLACE A TOTAL OF APPROXIMATELY 738' OF EXISTING 8" SLUDGE LINE FROM SEDIMENTATION BASIN TO SLUDGE HOLDING TANK.
3. DEMOLISH AND REPLACE A TOTAL OF APPROXIMATELY 164' OF EXISTING 8" SLUDGE LINE FROM SLUDGE HOLDING TANK TO SOLIDS PROCESSING PUMP STATION. REPLACE AS SHOWN IN OUTSIDE PIPING PLAN.
4. DEMOLISH AND REPLACE A TOTAL OF APPROXIMATELY 569' OF EXISTING 8" SLUDGE LINES (2) FROM SOLIDS PROCESSING PUMP STATION TO SLUDGE DEWATERING BUILDING. REPLACE AS SHOWN IN OUTSIDE PIPING PLAN.
5. DEMOLISH AND REPLACE A TOTAL OF APPROXIMATELY 60' OF EXISTING 8" SLUDGE DRAIN LINE/OVERFLOW LINE FROM SLUDGE HOLDING TANK TO SS MH. DEMOLISH PIPE AS NEEDED TO RECONNECT TO PROPOSED MH SHOWN IN OUTSIDE PIPING PLAN.
6. DEMOLISH AND REPLACE A TOTAL OF APPROXIMATELY 38' OF SEGMENT OF 15" STORM DRAIN LINE FROM PROPOSED BIORETENTION POND OUTLET PIPE TIE-IN TO EXISTING MANHOLE AS SHOWN IN THE GRADING AND DRAINAGE PLAN.
7. REMOVE EXISTING PAVEMENT, SUB-BASE MATERIAL, AND CURB AND GUTTER FROM SLUDGE HOLDING TANK TO EXISTING TRENCH DRAIN. GRADE PARKING LOT TO FINISHED GRADE (INCLUDING BIORETENTION POND BMP#1), REPLACE CURB AND GUTTER, AND REPAVE PARKING LOT. REFER TO GRADING PLAN FOR PROPOSED SITE LAYOUT AND FINISHED GRADES. SEE CIVIL DETAILS FOR PAVEMENT AND CURB AND GUTTER DETAILS.
8. CONTRACTOR TO REPAIR ANY CURB AND GUTTER DISTURBED DURING CONSTRUCTION. SEE CIVIL DETAILS.
9. REFER TO M-008 FOR DEMOLITION.
10. EXISTING CENTRIFUGE PLATFORM TO BE DEMOLISHED.

MATCHLINE (SEE SHEET C-006)

COPYRIGHT:
ARCADIS U.S., INC.
2016

IF THIS BAR IS NOT 1" INDICATED SCALE IS INCORRECT

NO.	DATE	ISSUED FOR	BY
0	JUL 2019	BIDDING	HG

SEALS

GEORGIA REGISTERED 07-31-2020 No. 033633 PROFESSIONAL ENGINEER ALI KARRAI HAGEN, II

ARCADIS
BPA
A Joint Venture
2839 Paces Ferry Road
Suite 900
Atlanta, GA 30339
Tel: 770-431-8666
Fax: 770-435-2666
www.arcadis-us.com

ATLANTA, GEORGIA
CITY OF ATLANTA
DEPARTMENT OF WATERSHED MANAGEMENT

EAST AREA WATER QUALITY CONTROL FACILITY IMPROVEMENTS

W.01.02.0085

SHEET TITLE

DEMOLITION PLAN
(3 OF 3)

DATE:	JULY 2019
PROJECT NO.:	GABPA134
DESIGNED BY:	W. HACKETT
DRAWN BY:	R. KUNZ
CHECKED BY:	A. SHARP

SCALE: 1" = 20'

C-007

SHEET 12 OF 150

User: TTHOMAS Spec: AUS-NCSM0D File: I:\ACAD\PROJ\GABPA134 - CSO GROUP 1\BID PACKAGE 2\SHEETS\CIVIL\C-007.DWG Scale: 1:1 SavedDate: 7/24/2019 Time: 14:56 Plot Date: Thomas, Travis; 7/30/2019; 08:45 ; Layout: 12

GEORGIA UNIFORM CODING SYSTEM
FOR SOIL EROSION AND SEDIMENT CONTROL PRACTICES
GEORGIA SOIL AND WATER CONSERVATION COMMISSION

STRUCTURAL PRACTICES

CODE	PRACTICE	DETAIL	MAP SYMBOL	DESCRIPTION
Co	CONSTRUCTION EXIT	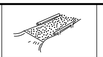		A crushed stone pad located at the construction site exit to provide a place for removing mud from tires thereby protecting public streets.
Sd1	SEDIMENT BARRIER			A barrier to prevent sediment from leaving the construction site. It may be sandbags, bales of straw or hay, brush, logs and poles, gravel, or a silt fence.
Sd2	INLET SEDIMENT TRAP			An impounding area created by excavating around a storm drain drop inlet. The excavated area will be filled and stabilized on completion of construction activities.
Tr	TREE PROTECTION			To protect desirable trees from injury during construction activity.

VEGETATIVE PRACTICES

CODE	PRACTICE	DETAIL	MAP SYMBOL	DESCRIPTION
Ds1	DISTURBED AREA STABILIZATION (WITH MULCHING ONLY)		Ds1	Establishing temporary protection for disturbed areas where seedlings may not have a suitable growing season to produce an erosion retarding cover.
Ds2	DISTURBED AREA STABILIZATION (WITH TEMP SEEDING)		Ds2	Establishing a temporary vegetative cover with fast growing seedings on disturbed areas.
Ds3	DISTURBED AREA STABILIZATION (WITH PERM SEEDING)		Ds3	Establishing a permanent vegetative cover such as trees, shrubs, vines, grasses, or legumes on disturbed areas.
Du	DUST CONTROL ON DISTURBED AREAS		Du	Controlling surface and air movement of dust on construction site, roadways and similar sites.
Ss	SLOPE STABILIZATION		Ss	A protective covering used to prevent erosion and establish temporary or permanent vegetation on steep slopes, shore lines, or channels.

MONTH

ITEM	1	2	3	4	5	6	7	8	9	10	11	12	13	14	15	16
INSTALL AND MAINTAIN EROSION CONTROL																
CLEARING AND GRUBBING																
EARTHWORK, GRADING AND SITE CONSTRUCTION																
VEGETATION AND MULCHING																
PERMANENT GRASSING AND GROUND COVER																

SITE NOTES:

1. PROJECT IS LOCATED IN THE 15TH DISTRICT, LAND LOT 111, DEKALB COUNTY, GEORGIA.
2. TOTAL DISTURBED ACREAGE IS 0.85 ACRES.
3. THE RECEIVING WATER FOR THIS PROJECT IS INTRENCHMENT CREEK.
4. A PORTION OF THIS SITE DOES LIE WITHIN A SPECIAL FLOOD HAZARD ZONE "AE" OR "A".
   FIRM MAP NUMBER: 13089C0129J
   EFFECTIVE DATE: MAY 16, 2013
5. 24-HOUR CONTACT: TBD
   CONTRACTOR: TBD
   ADDRESS: TBD
   PHONE: TBD

EROSION CONTROL

1. EROSION CONTROL PRACTICES MUST COMPLY WITH THE MINIMUM BEST MANAGEMENT PRACTICES FOR EROSION CONTROL AND SHALL COMPLY WITH THE STANDARDS / SPECIFICATIONS IN THE "MANUAL FOR EROSION CONTROL AND SEDIMENT CONTROL IN GEORGIA", LATEST EDITION.
2. EROSION AND SEDIMENT CONTROL DEVICES MUST BE INSTALLED AND INSPECTED PRIOR TO ANY LAND DISTURBANCE ACTIVITIES AS REQUIRED BY THE GOVERNING JURISDICTION AND/OR THE ENGINEER.
3. IN CONCENTRATED FLOW AREAS, ALL SLOPES STEEPER THAN 2.5:1 AND WITH THE HEIGHT TEN FEET OR GREATER, AND CUTS AND FILLS WITHIN STREAM BUFFER, SHALL BE STABILIZED WITH THE APPROPRIATE EROSION CONTROL MATTING OR BLANKET.
4. SEDIMENT / EROSION CONTROL DEVICES MUST BE CHECKED AFTER EACH STORM EVENT. EACH DEVICE IS TO BE MAINTAINED OR REPLACED IF SEDIMENT ACCUMULATION HAS REACHED ONE HALF THE CAPACITY OF THE DEVICE. THE CONTRACTOR SHALL FURNISH, INSTALL AND MAINTAIN ANY ADDITIONAL EROSION CONTROL MEASURES AS DIRECTED BY THE GOVERNING JURISDICTION AND/OR THE ENGINEER.

MANAGEMENT PLAN:

ALL EROSION CONTROL MEASURES SHALL BE INSPECTED DAILY AND AFTER EVERY RAINFALL. ALL NEEDED REPAIRS SHALL BE MADE IMMEDIATELY TO PREVENT FURTHER DAMAGE AND EROSION. STRUCTURES THAT SHALL BE INSPECTED INCLUDE:

OUTLET PROTECTION:
CHECK FOR EROSION AROUND OR BELOW THE RIPRAP AND IF STONES HAVE BEEN DISLODGED, MAKE NEEDED REPAIRS TO PREVENT FURTHER DAMAGE.

SEEDING, FERTILIZING, AND MULCHING:
SEEDED AREAS SHALL BE INSPECTED FOR FAILURE AND NECESSARY REPAIRS SHALL BE MADE IMMEDIATELY.

SEDIMENT BARRIER:
SEDIMENT SHALL BE REMOVED ONCE IT HAS ACCUMULATED TO ONE-HALF THE ORIGINAL HEIGHT OF THE BARRIER. SEDIMENT BARRIERS SHALL BE REPLACED PER MANUFACTURER'S RECOMMENDATIONS OR THE HEIGHT OF THE PRODUCT IS NOT MAINTAINING 80% OF ITS PROPERLY INSTALLED HEIGHT.

STOCKPILES:
STOCKPILES SHALL BE CHECKED FOR EROSION AND STABILIZED.

CONSTRUCTION ENTRANCE/EXIT:
INSPECT CONSTRUCTION ROAD SURFACE DAILY, MAINTAIN WHEN NEEDED IN A CONDITION TO PREVENT SEDIMENT AND TOPSOIL FROM LEAVING THE SITE. SEDIMENT TRANSPORTED TO MAIN PLANT ROAD AND TO PUBLIC ROADS SHALL BE REMOVED DAILY.

PERMANENT CHANNEL:
MAINTAIN ALL VEGETATION ADJACENT AND IN CHANNEL. IMMEDIATELY REPAIR DAMAGES DUE TO PIPING, SCOUR HOLES, OR BANK FAILURES.

TOP SOIL PREPARATION:
TOP SOIL FOR PERMANENT GRASSING SHALL BE CLEAN OF ROCKS LARGER THAN 1/2 INCH AND BE ABLE TO SUPPORT VEGETATION. TOP SOIL SHALL BE A MINIMUM OF 4 TO 6 INCHES THICK.

SLOPE STABILIZATION:
ALL EROSION CONTROL BLANKETS AND MATTING SHOULD BE INSPECTED PERIODICALLY FOLLOWING INSTALLATION, PARTICULARLY AFTER RAINSTORMS TO CHECK FOR EROSION AND UNDERMINING. ANY DISLOCATION OR FAILURE SHOULD BE REPAIRED IMMEDIATELY. IF WASHOUTS OR BREAKAGE OCCURS, REINSTALL THE MATERIAL AFTER REPAIRING DAMAGE TO THE SLOPE OR DITCH. CONTINUE TO MONITOR THESE AREAS UNTIL THEY BECOME PERMANENTLY STABILIZED.

POLLUTION CONTROLS

1. BMP'S SUCH AS CONSTRUCTION EXITS, WATERING STATIONS, AND SWEEPERS MAY BE UTILIZED TO MINIMIZE OFF-SITE VEHICLE TRACKING OF SEDIMENTS AND THE GENERATION OF DUST.
2. NON-EXEMPT ACTIVITIES SHALL NOT BE CONDUCTED WITHIN THE 25 OR 50-FOOT UNDISTURBED STREAM BUFFERS AS MEASURED FROM THE POINT OF WRESTED VEGETATION WITHOUT FIRST ACQUIRING THE NECESSARY VARIANCES AND PERMITS.
3. PETROLEUM BASED PRODUCTS- CONTAINERS FOR PRODUCTS SUCH AS FUELS, LUBRICANTS, TANKS WILL BE INSPECTED DAILY FOR LEAKS AND SPILLS. THIS INCLUDES ON-SITE VEHICLE AND MACHINERY DAILY INSPECTIONS AND REGULAR PREVENTATIVE MAINTENANCE OF SUCH EQUIPMENT. EQUIPMENT MAINTENANCE AREAS WILL BE LOCATED AWAY FROM STATE WATER, NATURAL DRAINS AND STORM WATER DRAINAGE INLETS. IN ADDITION, TEMPORARY FUELING TANKS SHALL HAVE A SECONDARY CONTAINMENT LINER TO PREVENT/MINIMIZE SITE CONTAMINATION. DISCHARGE OF OILS, FUELS AND LUBRICANTS IS PROHIBITED. PROPER DISPOSAL METHODS WILL INCLUDE COLLECTION IN A SUITABLE CONTAINER AND DISPOSAL AS REQUIRED BY LOCAL AND STATE REGULATIONS.
   3.1. SOLVENTS- ALL PRODUCTS WILL BE STORED IN TIGHTLY SEALED ORIGINAL CONTAINERS WHEN NOT IN USE. EXCESS PRODUCT WILL NOT BE DISCHARGED TO THE STORM WATER COLLECTION SYSTEM. EXCESS PRODUCT MATERIALS USED WITH THESE PRODUCTS AND PRODUCT CONTAINERS WILL BE DISPOSED OF ACCORDING TO MANUFACTURER'S SPECIFICATIONS AND RECOMMENDATIONS.
   3.2. CONCRETE TRUCK WASHING- NO CONCRETE TRUCKS WILL BE ALLOWED TO WASH OUT OR DISCHARGE SURPLUS CONCRETE OR DRUM WASH WATER ONSITE.
   3.3. FERTILIZER/HERBICIDES- THESE PRODUCTS WILL BE APPLIED AT RATES THAT DO NOT EXCEED THE MANUFACTURER'S SPECIFICATIONS OR ABOVE THE GUIDELINES SET FORTH IN THE CROP ESTABLISHMENT OR IN THE GSWCC MANUAL FOR EROSION AND SEDIMENT CONTROL IN GEORGIA. ANY STORAGE OF THESE MATERIALS WILL BE UNDER ROOF IN SEALED CONTAINERS.
   3.4. CONSTRUCTION MATERIALS- NO CONSTRUCTION MATERIALS WILL BE BURIED OR DISPOSED OF ONSITE. ALL SUCH MATERIAL WILL BE DISPOSED OF ACCORDING TO PROPER WASTE DISPOSAL PROCEDURES.
   3.5. NO WASTE WILL BE DISPOSED OF INTO STORM WATER INLETS OR WATERS OF THE STATE.
4. SOIL CLEANUP AND CONTROL PRACTICES
   4.1. SITE MUST COMPLY WITH ANY AND ALL STATE AND LOCAL REGULATIONS REGARDING WASTE DISPOSAL, SANITARY SEWER, OR SEPTIC TANKS. LOCAL, STATE AND MANUFACTURER'S RECOMMENDED METHODS FOR SPILL CLEANUP WILL BE CLEARLY POSTED AND PROCEDURES MADE AVAILABLE TO SITE PERSONNEL.
   4.2. MATERIAL AND EQUIPMENT NECESSARY FOR SPILL CLEANUP WILL BE KEPT IN THE MATERIAL STORAGE AREAS. TYPICAL MATERIALS AND EQUIPMENT INCLUDES, BUT IS NOT LIMITED TO: BROOMS, DUSTPANS, MOPS, RAGS, GLOVES, GOGGLES, CAT LITTER, SAND, SAWDUST AND PROPERTY LABELED PLASTIC AND METAL WASTE CONTAINERS.
   4.3. SPILL PREVENTION PRACTICES AND PROCEDURES WILL BE REVIEWED AFTER A SPILL AND ADJUSTED AS NECESSARY TO PREVENT FUTURE SPILLS.
   4.4. ALL SPILLS WILL BE CLEANED UP IMMEDIATELY UPON DISCOVERY. ALL SPILLS WILL BE REPORTED AS REQUIRED BY LOCAL, STATE AND FEDERAL REGULATIONS.
   4.5. FOR SPILLS THAT IMPACT SURFACE WATER (LEAVE A SHEEN ON SURFACE WATER), THE NATIONAL RESPONSE CENTER (NRC) WILL BE CONTACTED WITHIN 24 HOURS AT 1-800-424-8802.
   4.6. FOR SPILLS OF AN UNKNOWN AMOUNT, THE NATIONAL RESPONSE CENTER (NRC) WILL BE CONTACTED WITHIN 24 HOURS A 1-800-424-8802.
   4.7. FOR SPILLS GREATER THAN 25 GALLONS AND NO SURFACE WATER IMPACTS, THE GEORGIA EPD WILL BE CONTACTED WITHIN 24 HOURS.
   4.8. FOR SPILLS LESS THAN 25 GALLONS AND NO SURFACE WATER IMPACTS, THE SPILL WILL BE CLEANED UP AND LOCAL AGENCIES WILL BE CONTACTED AS REQUIRED.

THE CONTRACTOR SHALL NOTIFY THE LICENSED PROFESSIONAL WHO PREPARED THIS PLAN IF MORE THAN 1320 GALLONS OF PETROLEUM IS STORED ONSITE (THIS INCLUDES CAPACITIES OF EQUIPMENT) OR IF ANY ONE PIECE OF EQUIPMENT HAS A CAPACITY GREATER THAN 660 GALLONS. THE CONTRACTOR WILL NEED A SPILL PREVENTION CONTAINMENT AND COUNTERMEASURES PLAN PREPARED BY A LICENSED PROFESSIONAL.

5. SANITARY UNIT WILL BE ONSITE TO COLLECT ALL SANITARY WASTE DURING CONSTRUCTION ACTIVITY.

CONSTRUCTION SEQUENCE:

1. CONFIRM LOCATIONS OF AND CONSTRUCT/INSTALL CONSTRUCTION/TREE PROTECTION FENCES, SILT FENCES, INLET SEDIMENT TRAPS, AND THE CONSTRUCTION ENTRANCE AS SHOWN ON THE DRAWINGS.
2. CLEAR AND GRUB TO LIMITS REQUIRED FOR CONSTRUCTION AS SHOWN ON THE DRAWINGS. STOCKPILE FILL MATERIAL IN AREAS DESIGNATED FOR STOCKPILES AND DISPOSE OF WASTE MATERIALS.
3. BEGIN EXCAVATION AND GRADING ACTIVITIES AFTER ALL REQUIRED EROSION CONTROL MEASURES HAVE BEEN INSTALLED AND CONSTRUCTED.
4. ESTABLISH FINISHED GRADES ON SITE PERIMETER SLOPES AT EARLIEST POSSIBLE DATE. APPLY PERMANENT SOIL STABILIZATION IN ACCORDANCE WITH PLAN DETAILS.
5. DISTURBED AREAS SHALL BE STABILIZED WITH TEMPORARY VEGETATION OR MULCH IF LAND-DISTURBING ACTIVITIES CEASE FOR MORE THAN 14 CALENDAR DAYS.
6. AFTER FINAL STABILIZATION AS DEFINED BY NPDES GAR100001 IS ACHIEVED, RETURN TO THE SITE AND REMOVE ALL TEMPORARY MEASURES INCLUDING SILT FENCES, INLET PROTECTION, AND CONSTRUCTION EXIT. INSTALL PERMANENT VEGETATION TO ALL AREAS DISTURBED. REMOVE CONSTRUCTION/TREE PROTECTION FENCES.
7. REMOVE EROSION CONTROL MEASURES WITHIN 30 DAYS AFTER FINAL SITE STABILIZATION.

TREE PROTECTION

1. WHEN DIGGING NEAR TREES, THE CONTRACTOR SHALL PRUNE ALL EXPOSED ROOTS ONE INCH IN DIAMETER OR LARGER ON THE SIDE OF THE TRENCH ADJACENT TO THE TREES. PRUNING SHALL CONSIST OF MAKING A CLEAN CUT FLUSH WITH THE SIDE OF THE TRENCH TO PROMOTE NEW ROOT GROWTH.
2. THE CONTRACTOR SHALL PROTECT ALL TREES AND VEGETATION ON SITE EXCEPT AS NOTED ON THE PLANS OR APPROVED BY THE ENGINEER AND/OR OWNER/OPERATOR.
3. PROTECT THE TRUNKS OF ANY TREES BEING PRESERVED WITHIN THE SITE WITH STRAPPED ON PLANKING OR SIMILAR PROTECTIVE DEVICE.
4. TREE PROTECTION DEVICES MUST BE INSTALLED AND INSPECTED PRIOR TO ANY CLEARING, GRUBBING OR GRADING.

CITY OF ATLANTA EROSION CONTROL NOTES

1. PRIOR TO LAND-DISTURBING ACTIVITIES, THE CONTRACTOR SHALL SCHEDULE A PRE-CONSTRUCTION MEETING WITH THE AREA EROSION CONTROL INSPECTOR. CALL (404) 546-1300 TO CONTACT THE INSPECTOR.
2. THE ESCAPE OF SEDIMENT FROM THE SITE SHALL BE PREVENTED BY THE INSTALLATION OF EROSION AND SEDIMENT CONTROL MEASURES AND PRACTICES PRIOR TO, OR CONCURRENT WITH, LAND DISTURBING ACTIVITIES.
3. EROSION CONTROL MEASURES WILL BE MAINTAINED AT ALL TIMES. IF FULL IMPLEMENTATION OF THE APPROVED PLAN DOES NOT PROVIDE FOR EFFECTIVE EROSION CONTROL, ADDITIONAL EROSION AND SEDIMENT CONTROL MEASURES SHALL BE IMPLEMENTED TO CONTROL OR TREAT THE SEDIMENT SOURCE.
4. ANY DISTURBED AREA LEFT EXPOSED FOR A PERIOD GREATER THAN 14 DAYS SHALL BE STABILIZED WITH MULCH AND TEMPORARY SEEDING.
5. ANY DISTURBED AREAS REMAINING IDLE FOR 30 DAYS SHALL BE STABILIZED WITH PERMANENT VEGETATION.
6. EROSION AND SEDIMENT CONTROL MEASURES SHALL BE INSPECTED AT LEAST WEEKLY, AFTER EACH RAIN, AND REPAIRED AS NECESSARY.
7. ADDITIONAL EROSION AND SEDIMENT CONTROL MEASURES SHALL BE INSTALLED IF DETERMINED NECESSARY BY ON-SITE INSPECTION.
8. SILT FENCE SHALL MEET THE REQUIREMENTS OF SECTION 171 – TYPE C TEMPORARY SILT FENCE, OF THE GEORGIA DEPARTMENT OF TRANSPORTATION STANDARD SPECIFICATIONS, 1993 EDITION, AND BE WIRE REINFORCED.
9. CITY OF ATLANTA, THE PROPERTY OWNER, AND CONTRACTOR ARE EQUALLY RESPONSIBLE FOR ALL EROSION CONTROL ACTIVITIES.
10. IT IS THE RESPONSIBILITY OF THE CONTRACTOR TO OBTAIN QUALIFIED PROFESSIONAL ADVICE WHEN QUESTIONS ARISE CONCERNING DESIGN AND EFFECTIVENESS OF EROSION CONTROL DEVICES, NOT THE CITY OF ATLANTA.
11. ALL TEMPORARY AND PERMANENT SEEDING MUST BE PERFORMED AT THE APPROPRIATE SEASON. IN SUCH INSTANCES WHERE THE ESTABLISHMENT OF VEGETATION IS INOPPORTUNE DUE TO SEASON OR DROUGHT, DISTURBED AREAS SHALL BE TEMPORARILY STABILIZED USING 2"-4" OF MULCH (DS1). ADDITIONAL PLANTINGS WILL BE NECESSARY IF A SUFFICIENT STAND OF GRASS FAILS TO GROW.
12. THE CITY'S DESIGNEE WILL VERIFY ADEQUATE COVER (100% COVER, 70% DENSITY) OF PERMANENT STABILIZATION (DS3, DS4).
13. SILT FENCES SHALL NOT BE PLACED IN STREAM BUFFER OR FLOODPLAINS, UNLESS UTILIZED FOR
    THE CONSTRUCTION OF AN EXEMPT ACTIVITY (I.E. ROADWAY DRAINAGE STRUCTURES, SEWER/WATER CROSSINGS, OR DRAINAGE STRUCTURES) PER THE APPROVED PLANS. FOR SUCH DISTURBANCES WITHIN THE BUFFER, THE AREA SHALL BE IMMEDIATELY STABILIZED USING EROSION CONTROL MATTING AND/OR BLANKETS ONCE THE ACTIVITY IS COMPLETE.
14. FOR EACH SITE ON WHICH LAND DISTURBING ACTIVITY OCCURS, EACH ENTITY OR PERSON ACTING AS EITHER A PRIMARY, SECONDARY, OR TERTIARY PERMITTEE, AS DEFINED IN THE STATE GENERAL PERMIT, SHALL HAVE AS A MINIMUM ONE PERSON WHO IS IN RESPONSIBLE CHARGE OF EROSION AND SEDIMENTATION CONTROL ACTIVITIES ON BEHALF OF SAID ENTITY OR PERSON AND MEETS THE APPLICABLE (LEVEL 1A) EDUCATION OR TRAINING CERTIFICATION REQUIREMENTS (O.C.G.A. 12-7-19(A)(2)).
15. SUBCONTRACTORS INVOLVED WITH LAND DISTURBANCE ACTIVITIES SHALL MEET THE EDUCATION REQUIREMENTS (LEVEL 1) DESCRIBED IN O.C.G.A 12-7-19.

COPYRIGHT:
ARCADIS U.S., INC.
2016

IF THIS BAR IS NOT 1" INDICATED SCALE IS INCORRECT

NO.	DATE	ISSUED FOR	BY
0	JUL 2019	BIDDING	HG

SEALS

GEORGIA REGISTERED 07-31-2019 No. 033833 PROFESSIONAL ENGINEER ALTARRAL HAGEN, II

ARCADIS
BPA
A Joint Venture
2839 Paces Ferry Road
Suite 900
Atlanta, GA 30339
Tel: 770-431-8666
Fax: 770-435-2666
www.arcadis-us.com

ATLANTA, GEORGIA
CITY OF ATLANTA
DEPARTMENT OF WATERSHED MANAGEMENT

EAST AREA WATER QUALITY CONTROL FACILITY IMPROVEMENTS

W.01.02.0085

SHEET TITLE

EROSION AND SEDIMENTATION CONTROL LEGEND AND NOTES

DATE:	JULY 2019
PROJECT NO.:	GABPA134
DESIGNED BY:	A. JACOBS
DRAWN BY:	J. BROWN
CHECKED BY:	A. SHARP

SCALE: NONE

C-008

SHEET 13 OF 150

User:TTHOMAS Spec:AUS-NCSMOD File:I:\ACADVPROJ\GABPA134 - CSO GROUP 1\BID PACKAGE 2\SHEETS\CIVIL\C-008.DWG Scale:1:1 SavedDate:7/29/2019 Time:14:02 Plot Date: Thomas, Travis; 7/30/2019; 08:45 ; Layout:13

MATCHLINE (SEE SHEET C-010)

PLANT NORTH

TRUE NORTH

NOTE 1

8ST(DIP)

NOTE 3

SLUDGE PUMP STATION

SEDIMENTATION BASIN NO. 2

1" CORP STOP W/ 1" CURB COCK ON EXISTING DIP LINE (SIZE UNKNOWN)

1W2(CU)

NOTE 2

C/O

REFER TO SHEET C-016 FOR CONNECTION DETAILS. MODIFY AS NEEDED FOR SIZED DRAIN CONNECTION SEE DETAIL 3 SHEET C-016

4DR(PVC)

FRP SAMPLING POINT INSTRUMENT CABINET. (SEE MECH SHEET M-020)

RAPID MIX TANK

GRIT SETTLING TANK NO. 2

DETRITUS TANK NO. 2

GRIT PUMP STATION NO. 2

SEPARATOR

HEAD BOX

SWITCHGEAR BLDG

XFMR

OLD VORTEX BUILDING

EROSION CONTROL NOTES

Ds1 | Ds2 | Ds3

1. ALL NON IMPERVIOUS DISTURBED AREAS TO BE STABILIZED USING TEMPORARY/PERMANENT STABILIZATION PRACTICES (TYPICAL). ALL TEMPORARY/PERMANENT STABILIZATION PRACTICES ARE TO BE IN ACCORDANCE WITH THE MANUAL FOR EROSION AND SEDIMENT CONTROL IN GEORGIA, LATEST EDITION.

Du

2. THE CONTRACTOR SHALL STRICTLY ADHERE TO DUST CONTROL GUIDELINES AS SET FORTH IN THE MANUAL FOR EROSION AND SEDIMENT CONTROL IN GEORGIA, LATEST EDITION.

Ss

3. ALL SLOPES STEEPER THAN 2.5:1 AND WITH A HEIGHT TEN FEET OR GREATER, AND CUTS AND FILLS WITHIN THE STREAM BUFFER, SHALL BE STABILIZED WITH THE APPROPRIATE EROSION CONTROL MATTING OR BLANKET. PROVIDE PROTECTIVE COVERING TO PREVENT EROSION AND ESTABLISH TEMPORARY OR PERMANENT VEGETATION ON SLOPES IN ACCORDANCE WITH THE MANUAL FOR EROSION AND SEDIMENT CONTROL IN GEORGIA, LATEST EDITION.

4. INSTALL DOUBLE ROW TYPE-S SILT FENCE ALONG STREAM TOP OF BANK.

Tr

5. THE CONTRACTOR SHALL REMOVE ONLY SUCH TREES ON OR ALONG THE WORK AS NECESSARY, AND SHALL CAREFULLY PROTECT ALL OTHER TREES ADJACENT TO THE WORK. WORK SHALL BE DONE IN ACCORDANCE WITH CITY OF ATLANTA'S TREE ORDINANCE REQUIREMENTS. FOR THOSE TREES TO BE PROTECTED, TREE PROTECTION ZONES ARE TO BE ESTABLISHED AND TREE PROTECTION FENCING SHALL BE CONSTRUCTED IN ACCORDANCE WITH THE MANUAL FOR EROSION AND SEDIMENT CONTROL IN GEORGIA, LATEST EDITION.

Sd2-P

STAGING/LAYDOWN AREA (EXISTING PAVED AREA)

INSET A

EFF PARSHALL FLUME

TUNNEL PUMP STATION

ELECTRICAL BUILDING

EXISTING PAVEMENT

EXISTING CONCRETE CHANNEL

VALVE VAULT

500 YR FLOOD PLAIN

100 YR FLOOD PLAIN

CO

N: 1346940.71
E: 2245248.68

SD1-S DOUBLE ROW

25' STREAM BUFFER

REMOVE/REPLACE EX. CHAINLINK FENCE AS NEEDED

BEGIN CHANNEL REPLACEMENT NOTE 4

SD1-B

Ss

NOTES:

1. REPLACE EXISTING 8" SLUDGE LINE FROM SEDIMENTATION BASINS TO SLUDGE HOLDING TANK.
2. THE 1W2(CU) LINE IS BURIED UNDER ABOVE GRADE PLATFORM.
3. CLEANOUTS TO BE INSTALLED ALONG LINE AT MAXIMUM SPACING OF 100 FEET.
4. EXISTING CHANNEL IS CONCRETE. PROPOSED DEMOLITION AND REPLACEMENT COMMENCES HERE AND CONTINUES TO CONFLUENCE WITH STREAM BED.
5. TIME SPENT WORKING IN THE CREEK SHALL BE KEPT TO A MINIMUM.
6. REPLACEMENT OF THE TOE-WALL CANNOT START WHEN A RAIN EVENT IS FORECAST IN THE NEXT 72 HOURS. CONTRACTOR IS EXPECTED TO FINISH THE CHANNEL REPLACEMENT WORK WITHIN 72 HOURS.
7. CONTRACTOR TO PROVIDE SLOPE STABILIZATION (Ss) WITHIN THE CREEK BUFFER AS WORK PROGRESSES. ADDITIONAL MEASURES MAY BE REQUIRED BY THE SITE INSPECTOR.
8. ALL EROSION AND SEDIMENT CONTROL MEASURES SHOULD BE INSPECTED PERIODICALLY FOLLOWING INSTALLATION TO CHECK FOR EROSION AND UNDERMINING. ANY DISLOCATION OR FAILURE SHOULD BE REPAIRED IMMEDIATELY. IF WASHOUTS OR BREAKAGE OCCURS, REINSTALL THE MATERIAL AFTER REPAIRING THE DAMAGE TO THE SLOPE OR DITCH. CONTINUE TO MONITOR THESE AREAS UNTIL THEY BECOME PERMANENTLY STABILIZED. THE ABOVE MENTIONED BMPS TO BE REMOVED ONCE SANITARY SEWER HAS BEEN INSTALLED AND PERMANENT EROSION PROTECTION HAS BEEN ESTABLISHED. THE CREEK BUFFER AREAS SHALL BE RESTORED TO ORIGINAL OR BETTER THAN ORIGINAL CONDITIONS IMMEDIATELY FOLLOWING COMPLETION OF WORK IN THAT AREA.
9. TOTAL DISTURBED AREA = 0.85 ACRES.

SCALE: 1" = 30'

SCALE: 1" = 20'

COPYRIGHT: ARCADIS U.S., INC. 2016

IF THIS BAR IS NOT 1" INDICATED SCALE IS INCORRECT

NO.	DATE	ISSUED FOR	BY
0	JUL 2019	BIDDING	HG

SEALS

GEORGIA REGISTERED 07-31-2019 No. 033633 PROFESSIONAL ENGINEER ALI TARRAL HAGEN II

ARCADIS A Joint Venture
BPA
2839 Paces Ferry Road
Suite 900
Atlanta, GA 30339
Tel: 770-431-8666
Fax: 770-435-2666
www.arcadis-us.com

RESURGENS 1887 ATLANTA, GA. 1889

ATLANTA, GEORGIA
CITY OF ATLANTA
DEPARTMENT OF WATERSHED MANAGEMENT

EAST AREA WATER QUALITY CONTROL FACILITY IMPROVEMENTS

W.01.02.0085

SHEET TITLE

OUTSIDE PIPING, GRADING, DRAINAGE AND EROSION CONTROL PLAN 1

DATE:	JULY 2019
PROJECT NO.:	GABPA134
DESIGNED BY:	W. HACKETT
DRAWN BY:	J. BROWN
CHECKED BY:	A. SHARP

SCALE: 1" = 20'

C-009

SHEET 14 OF 150

User:TTHOMAS Spec:AUS-NCSMOD File:I:\ACAD\PROJ\GABPA134 - CSO GROUP 1\BID PACKAGE 2\SHEETS\CIVIL\C-009.DWG Scale:1:1 SavedDate:7/29/2019 Plot Date: Thomas, Travis; 7/30/2019; 08:45 ; Layout:14 Date:7/29/2019 Time:13:59

MATCHLINE (SEE SHEET C-011)

EROSION CONTROL NOTES

Ds1 | Ds2 | Ds3

1. ALL NON IMPERVIOUS DISTURBED AREAS TO BE STABILIZED USING TEMPORARY/PERMANENT STABILIZATION PRACTICES (TYPICAL). ALL TEMPORARY/PERMANENT STABILIZATION PRACTICES ARE TO BE IN ACCORDANCE WITH THE MANUAL FOR EROSION AND SEDIMENT CONTROL IN GEORGIA, LATEST EDITION.

Du

2. THE CONTRACTOR SHALL STRICTLY ADHERE TO DUST CONTROL GUIDELINES AS SET FORTH IN THE MANUAL FOR EROSION AND SEDIMENT CONTROL IN GEORGIA, LATEST EDITION.

NOTES:

1. REPLACE EXISTING 8" SLUDGE LINE FROM SEDIMENTATION BASINS TO SLUDGE HOLDING TANK.
2. INSTALL TWO (2) PARALLEL 6" SLUDGE LINES FROM SLUDGE HOLDING TANK TO SOLIDS PROCESSING PUMP STATION. SEE SHEET M-013.
3. REPLACE TWO (2) EXISTING 6" SLUDGE LINES FROM SOLIDS PROCESSING PUMP STATION TO PROPOSED SLUDGE DEWATERING BUILDING WITH 4" SLUDGE LINES.
4. CONTRACTOR TO FIELD VERIFY AND ADJUST PROPOSED ROUTE AND ELEVATIONS AS NEEDED TO AVOID CONFLICTS ENCOUNTERED IN FIELD. PLAN VIEW ROUTE AND ELEVATIONS PROVIDED AS GENERAL GUIDANCE.
5. CLEANOUTS TO BE INSTALLED ALONG LINE AT MAXIMUM SPACING OF 100 FEET.
6. REPLACE CONCRETE PAD AT BUILDING ENTRANCE TO MATCH EXISTING CONDITIONS.
7. TOTAL DISTURBED AREA = 0.85 ACRES.
8. DEFLECT AROUND EXISTING PIPE AS NEEDED.

PREVIOUSLY ABANDONED 8" SL

82.48 LF 12DR(DIP) @ 0.96%

6SL(HDPE)

4SL(HDPE)

NOTE 3

SOLIDS PROCESSING PUMP STATION

NOTE 6

NOTE 2

MH-5 ELV.
RIM 806.00
INV IN 802.00
INV OUT 801.80

LIMITS OF DISTURBANCE

84.91LF 12DR(DIP) @ 1.05%

NOTE 4

MH (EXISTING) ELV.
RIM 807.80
INV IN (12") 800.26
INV IN (18") 799.00
INV IN (24") 796.46
INV OUT (24") 796.46

47.14LF 12DR(DIP) @ 1.04%

MH-6 ELV.
RIM 807.00
INV IN 800.95
INV OUT 800.75

48" PLANT INFLUENT (AL)

WASTE WASHWATER PUMP STATION

8SL(HDPE)

FILTER BUILDING (AND DISINFECTION)

STAGING/LAYDOWN AREA

NOTE 1

NOTE 5

SANITARY PUMP STATION (EXISTING)

DETRITUS TANK NO. 1

INFLUENT JUNCTION BOX NO. 1

GRIT PUMP STATION NO. 1

YARD INLET

GRIT SETTLING TANK NO. 1

SEDIMENTATION BASIN NO. 1

NOTE 8

XFMR PAD

TB1 – SW CORNER OF PAD
PLANT NORTH
N: 10006.11
E: 5474.83
Z: 808.01
GRID NORTH
N: 1347293.31
E: 2245450.99
Z: 808.01

500 YR FLOOD PLAIN

100 YR FLOOD PLAIN

PLANT NORTH

TRUE NORTH

NORTH 10200

EAST 5600

NORTH 10000

MATCHLINE (SEE SHEET C-009)

0 10' 20' 40'

COPYRIGHT: ARCADIS U.S., INC. 2016

IF THIS BAR IS NOT 1" INDICATED SCALE IS INCORRECT

NO.	DATE	ISSUED FOR	BY
0	JUL 2019	BIDDING	HG

SEALS

GEORGIA REGISTERED 07-31-20 No. 033633 PROFESSIONAL ENGINEER ALI ARRALHAGEN II

ARCADIS A Joint Venture
BPA
2839 Paces Ferry Road
Suite 900
Atlanta, GA 30339
Tel: 770-431-8666
Fax: 770-435-2666
www.arcadis-us.com

ATLANTA, GEORGIA
CITY OF ATLANTA
DEPARTMENT OF WATERSHED MANAGEMENT

EAST AREA WATER QUALITY CONTROL FACILITY IMPROVEMENTS

W.01.02.0085

SHEET TITLE

OUTSIDE PIPING, GRADING, DRAINAGE AND EROSION CONTROL PLAN 2

DATE:	JULY 2019
PROJECT NO.:	GABPA134
DESIGNED BY:	W. HACKETT
DRAWN BY:	J. BROWN
CHECKED BY:	A. SHARP

SCALE: 1" = 20'

C-010

SHEET 15 OF 150

User:TTHOMAS Spec:AUS-NCSMOD File:I:\ACAD\PROJ\GABPA134 - CSO GROUP 1\BID PACKAGE 2\SHEETS\CIVIL\C-010.DWG Scale:1:1 SavedDate:7/29/2019 Time:14:02 Plot Date: Thomas, Travis; 7/30/2019; 08:46 ; Layout:15

NOTES:

1. REPLACE EXISTING 8" SLUDGE LINE FROM SEDIMENTATION BASINS TO SLUDGE HOLDING TANK.
2. REPLACE EXISTING SLUDGE LINES (2) CONNECTING PROPOSED SLUDGE DEWATERING BUILDING TO EXISTING SOLIDS PROCESSING PUMP STATION WITH 4" SLUDGE LINES.
3. DEMOLISH AND FILL EXISTING VALVE AND METER VAULTS (SIZES UNKNOWN) LOCATED BENEATH SLUDGE DEWATERING BUILDING FOOTPRINT.
4. EXTEND 3" W2 LINE OFF EXISTING CITY W2 SYSTEM TO NEW SLUDGE DEWATERING BUILDING. CONTRACTOR TO FIELD VERIFY CONNECTION AND ASSOCIATED ROUTING.
5. INSTALL TWO (2) PARALLEL 6" SLUDGE LINES FROM SLUDGE HOLDING TANK TO SOLIDS PROCESSING PUMP STATION.
6. REPLACE EXISTING SLUDGE HOLDING TANK OVERFLOW LINE TO PROPOSED MANHOLE.
7. CONTRACTOR TO FIELD VERIFY AND ADJUST PROPOSED PIPE ROUTE AS NEEDED TO AVOID CONFLICTS ENCOUNTERED IN FIELD. PLAN VIEW ROUTE AND ELEVATION PROVIDED AS GENERAL GUIDANCE.
8. CLEANOUTS TO BE INSTALLED ALONG LINE AT MAXIMUM SPACING OF 100 FEET.
9. RESTORE ANY DISTURBED EXISTING CURB AND GUTTER, CATCH BASIN, MANHOLE COVERS AND ASPHALT ADJACENT TO PROPOSED SLUDGE DEWATERING BUILDING TO MATCH EXISTING CONDITIONS. (SEE CIVIL DETAILS.)
10. CONCRETE APRONS SHALL BE INSTALLED AT DESIGNATED LOCATIONS. APRONS SHALL BE SLOPED FROM ASPHALT TO MEET FFE/SLAB ELEVATION AT EACH ROLL-UP DOOR ELEVATION (SEE CIVIL DETAILS).
11. REFER TO M-010 AND M-011 FOR CONNECTIONS TO EXISTING SLUDGE TANK.
12. INSTALL 8" CHECKMATE INLINE CHECK VALVE OR EQUAL AT THIS LOCATION IMMEDIATELY UPSTREAM OF MANHOLE.
13. CONTRACTOR TO REPLACE ALL PAVEMENT WITHIN THE DISTURBED AREA AROUND THE SLUDGE DEWATERING BUILDING PLUS MILL AND OVERLAY THE STAGING/LAYDOWN AREA. SEE CIVIL DETAILS FOR PAVEMENT DETAIL.
14. CONTRACTOR TO REPLACE ALL PAVED AREAS DAMAGED DURING CONSTRUCTION. REPLACEMENT TO CONSIST OF PAVEMENT MILL AND OVERLAY.
15. CONTRACTOR TO REPAIR ANY CURB AND GUTTER DISTURBED DURING CONSTRUCTION. SEE CIVIL DETAILS.
16. TOP OF SIDEWALK ELEVATION FOR SLUDGE DEWATERING BUILDING IS 826.80 FT. (TYP.) AND SLOPES AWAY FROM BUILDING TO ASPHALT. TIE INTO PROPOSED GRADING.
17. BOLLARDS (7) TO BE FIELD LOCATED AND VERIFIED BY CONTRACTOR PRIOR TO CONSTRUCTION.
18. TOTAL DISTURBED AREA = 0.85 ACRES.
19. CONTRACTOR TO CONFIRM THIS LINE AS STORM, SANITARY OR COMBINED WITH FACILITY STAFF.
20. SET STORMWATER MANHOLE TOP 2 FT (MIN) ABOVE PROPOSED GRADE.
21. CONSTRUCT HEADER CURB ALONG CONCRETE SIDEWALK.
22. END CURB AND GUTTER. BEGIN HEADER CURB.
23. ADJUST STORMWATER MANHOLE TOP AS NEEDED TO MATCH PROPOSED GRADE.
24. LOCATION AND ELEVATIONS OF EXISTING SITE FEATURES, UTILITIES AND WORK ARE BASED ON THE BEST AVAILABLE INFORMATION INCLUDING TOPOGRAPHIC SURVEY AND RECORD DRAWINGS. EXACT LOCATION AND COMPLETENESS IS NOT GUARANTEED. PRIOR TO CONSTRUCTION, IT SHALL BE THE CONTRACTOR'S RESPONSIBILITY TO PERFORM A UTILITY LOCATE AND FIELD SURVEY TO CONFIRM EXISTING GRADE ELEVATIONS AND DEPTHS AND LOCATIONS OF ALL STRUCTURES, UTILITIES, AND LINEWORK LOCATED WITHIN THE LIMITS OF DISTURBANCE. THE FIELD SURVEY AND UTILITY LOCATE SHALL BE APPROVED BY THE ENGINEER PRIOR TO CONSTRUCTION.
25. REFER TO LARGE DIAMETER MANHOLE BASE STANDARD DETAIL FOR CONSTRUCTION OF STORMWATER MANHOLES. 3,000 PSI CONCRETE FILL AROUND PIPE WITHIN MANHOLE AS SHOWN ON DETAIL IS NOT REQUIRED.
26. ADJUST SANITARY SEWER MANHOLE RIM ELEVATIONS AS NEEDED TO MATCH PROPOSED GRADE IN PAVED AREAS.
27. FILLING OF THE BIORETENTION POND WITH THE PERMEABLE SOIL MATERIAL, MULCH, AND LANDSCAPING OF THE BMP SHOULD NOT OCCUR UNTIL THE FINAL PHASE OF CONSTRUCTION AFTER THE PROPOSED BUILDING AND UTILITIES ARE CONSTRUCTED AND FINAL GRADING FOR THE SITE (EXCEPT WHERE THE BIORETENTION AREA WILL BE CONSTRUCTED) HAS BEEN COMPLETED. ONCE THE SITE IS STABILIZED WITH VEGETATION AND IMPERVIOUS SURFACE COVER, THE SEDIMENT SHALL BE REMOVED FROM THE POND AND FINAL CONSTRUCTION OF THE POND COMPLETED.

Ds1 | Ds2 | Ds3

Du

EROSION CONTROL NOTES

1. ALL NON IMPERVIOUS DISTURBED AREAS TO BE STABILIZED USING TEMPORARY/PERMANENT STABILIZATION PRACTICES (TYPICAL). ALL TEMPORARY/PERMANENT STABILIZATION PRACTICES ARE TO BE IN ACCORDANCE WITH THE MANUAL FOR EROSION AND SEDIMENT CONTROL IN GEORGIA, LATEST EDITION AND APPROVED BY ENGINEER.
2. THE CONTRACTOR SHALL STRICTLY ADHERE TO DUST CONTROL GUIDELINES AS SET FORTH IN THE MANUAL FOR EROSION AND SEDIMENT CONTROL IN GEORGIA, LATEST EDITION.

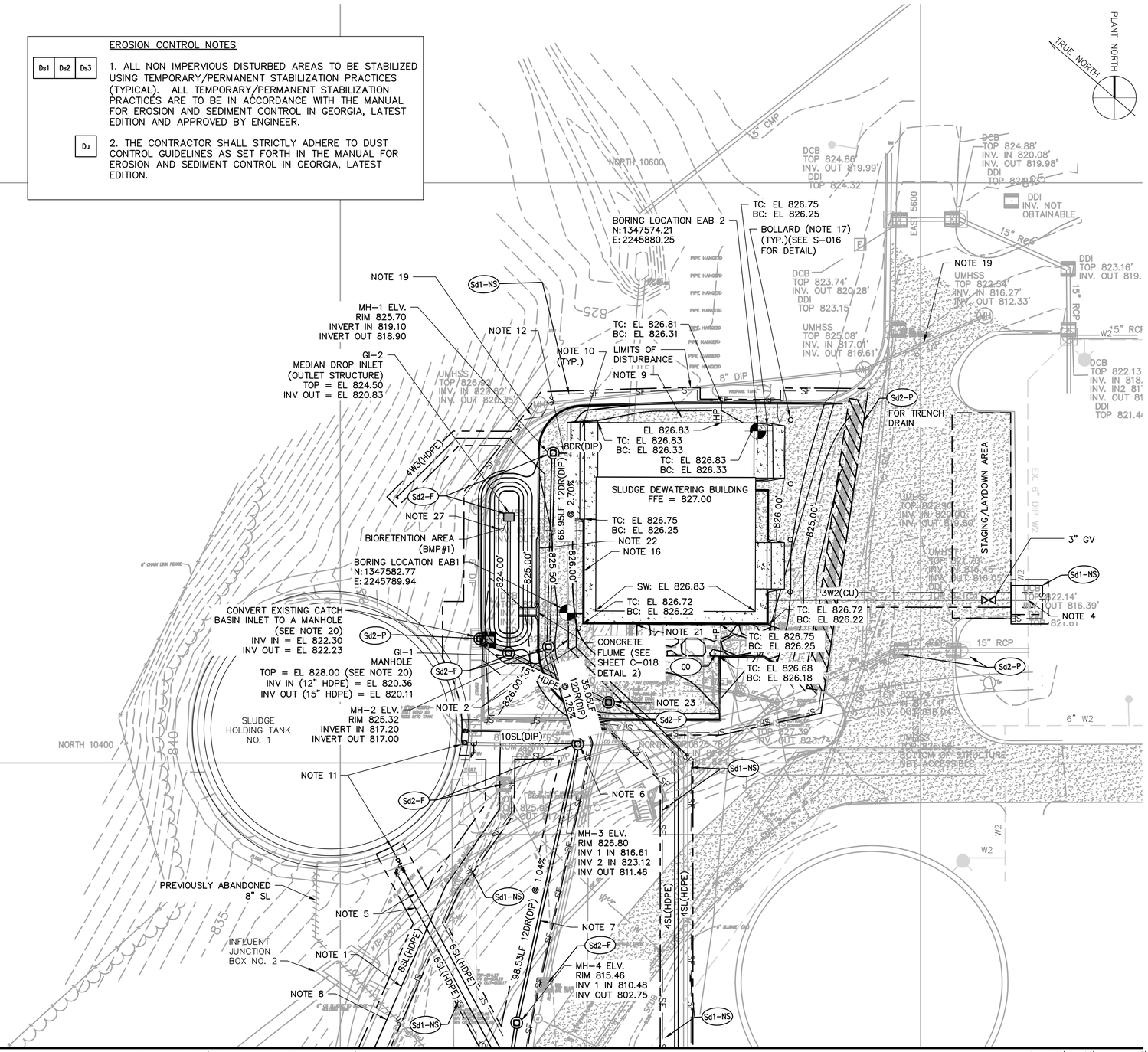
PLANT NORTH
TRUE NORTH
NORTH 10600
EAST 5600
NORTH 10400
EAST 5200
BORING LOCATION EAB 2
N: 1347574.21
E: 2245880.25
BOLLARD (NOTE 17) (TYP.)(SEE S-016 FOR DETAIL)
TC: EL 826.75
BC: EL 826.25
NOTE 19
MH-1 ELV.
RIM 825.70
INVERT IN 819.10
INVERT OUT 818.90
GI-2
MEDIAN DROP INLET
(OUTLET STRUCTURE)
TOP = EL 824.50
INV OUT = EL 820.83
NOTE 12
NOTE 10 (TYP.)
LIMITS OF DISTURBANCE
NOTE 9
TC: EL 826.81
BC: EL 826.31
8" DIP
FIRWIRE TANK
Sd1-NS
Sd2-P
FOR TRENCH DRAIN
8DR(DIP)
4W3(HDPE)
Sd2-F
NOTE 27
BIORETENTION AREA (BMP#1)
BORING LOCATION EAB1
N: 1347582.77
E: 2245789.94
66.95LF 12DR(DIP) @ 2.70%
EL 826.83
TC: EL 826.83
BC: EL 826.33
TC: EL 826.83
BC: EL 826.33
SLUDGE DEWATERING BUILDING
FFE = 827.00
TC: EL 826.75
BC: EL 826.25
NOTE 22
NOTE 16
SW: EL 826.83
TC: EL 826.72
BC: EL 826.22
3W2(CU)
TC: EL 826.72
BC: EL 826.22
NOTE 21
TC: EL 826.75
BC: EL 826.25
CO
TC: EL 826.68
BC: EL 826.18
CONCRETE FLUME (SEE SHEET C-018 DETAIL 2)
35.03LF 12DR(DIP) @ 1.26%
NOTE 23
CONVERT EXISTING CATCH BASIN INLET TO A MANHOLE (SEE NOTE 20)
INV IN = EL 822.30
INV OUT = EL 822.23
GI-1
MANHOLE
TOP = EL 828.00 (SEE NOTE 20)
INV IN (12" HDPE) = EL 820.36
INV OUT (15" HDPE) = EL 820.11
MH-2 ELV.
RIM 825.32
INVERT IN 817.20
INVERT OUT 817.00
NOTE 2
SLUDGE HOLDING TANK NO. 1
10SL(DIP)
NOTE 11
NOTE 6
MH-3 ELV.
RIM 826.80
INV 1 IN 816.61
INV 2 IN 823.12
INV OUT 811.46
PREVIOUSLY ABANDONED 8" SL
NOTE 5
NOTE 7
INFLUENT JUNCTION BOX NO. 2
NOTE 1
NOTE 8
6SL(HDPE)
8SL(HDPE)
98.53LF 12DR(DIP) @ 1.04%
4SL(HDPE)
MH-4 ELV.
RIM 815.46
INV 1 IN 810.48
INV OUT 802.75
STAGING/LAYDOWN AREA
3" GV
15" RCP
6" W2
EX 6" DIP DWM
DCB
TOP 824.86'
INV. OUT 819.99'
DDI
TOP 824.32'
DCB
TOP 824.88'
INV. IN 820.08'
INV. OUT 819.98'
DDI
TOP 826.85
DDI
INV. NOT OBTAINABLE
DCB
TOP 823.74'
INV. OUT 820.28'
DDI
TOP 823.15
UMHSS
TOP 825.08'
INV. IN 817.01'
INV. OUT 816.61'
UMHSS
TOP 822.54'
INV. IN 816.27'
INV. OUT 812.33'
DDI
TOP 823.16'
INV. OUT 819.
DCB
TOP 822.13
INV. IN 818.
INV. IN2 81
INV. OUT 81
DDI
TOP 821.4
NOTE 4
UMHSS
TOP 822.14'
INV. IN 816.45'
INV. OUT 816.39'
DDI
TOP 821.01
UMHSS
TOP 822.20'
INV. IN 816.47'
INV. OUT 816.41'
UMHSS
TOP 823.20'
INV. IN 819.47'
INV. OUT 819

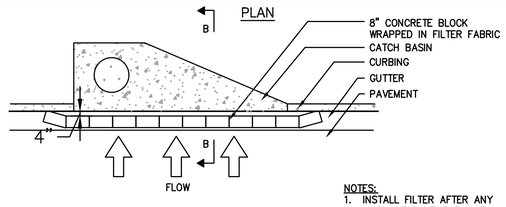

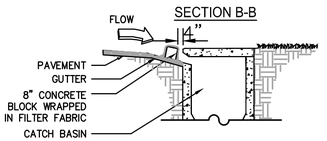

NOTES:
1. INSTALL FILTER AFTER ANY ASPHALT PAVEMENT INSTALLATION.
2. WRAP 8" CONCRETE BLOCKS IN FILTER FABRIC AND SPAN across CATCH BASIN INLET.
3. FACE OPENINGS IN BLOCKS OUTWARD.
4. LEAVE A GAP OF APPROXIMATELY 4 INCHES BETWEEN THE CURB AND THE FILTERS TO ALLOW FOR OVERFLOW TO PREVENT HAZARDOUS PONDING.
5. INSTALL OUTLET PROTECTION BELOW STORM DRAIN OUTLETS.

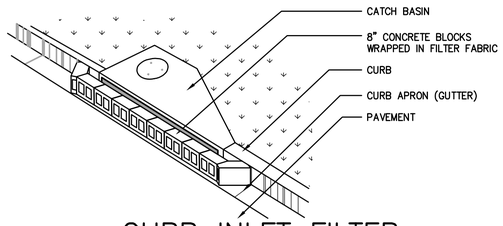

Sd2-P
CURB INLET FILTER
N.T.S.

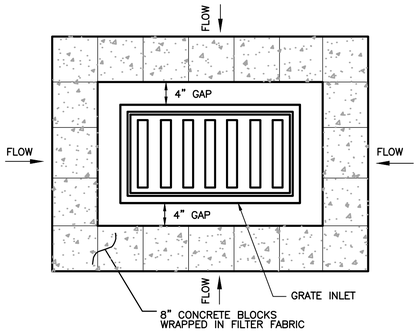

INSTALLATION:
1. INSTALL INLET SEDIMENT TRAP IMMEDIATELY AFTER PAVING OR IF PAVING CURRENTLY EXISTS. USE 8" CONCRETE BLOCK WRAPPED IN FILTER FABRIC. PROVIDE A 4" GAP BETWEEN TRAP AND INLET TO ALLOW FOR OVERFLOW TO PREVENT HAZARDOUS PONDING.
2. FACE OPENINGS IN BLOCKS OUTWARD.

MAINTENANCE:
THE TRAP SHALL BE INSPECTED DAILY AND AFTER EACH RAIN AND REPAIRS MADE AS NEEDED. SEDIMENT SHALL BE REMOVED WHEN THE SEDIMENT HAS ACCUMULATED TO ONE-HALF THE HEIGHT OF THE TRAP. SEDIMENT SHALL NOT BE WASHED INTO THE INLET. IT SHALL BE REMOVED FROM THE SEDIMENT TRAP AND DISPOSED OF AND STABILIZED SO THAT IT WILL NOT ENTER THE INLET AGAIN.

Sd2-P
INLET SEDIMENT TRAP (FOR DROP INLET USE)
N.T.S.

STEEL FRAME AND SILT FENCE INSTALLATION

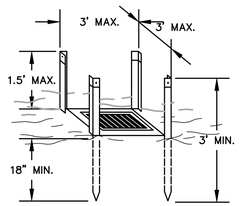

NOTES:
1. DESIGN IS FOR SLOPES NO GREATER THAN 5% (NOT DESIGNED FOR CONCENTRATED FLOWS).
2. THE STEEL POSTS SUPPORTING THE SILT FENCE MATERIAL SHOULD BE SPACED EVENLY AROUND THE PERIMETER OF THE INLET (MAXIMUM OF 3' APART).
3. THE STEEL POSTS SHOULD BE SECURELY DRIVEN AT LEAST 18" DEEP.
4. THE FABRIC SHOULD BE ENTRENCHED AT LEAST 12" AND THEN BACKFILLED WITH CRUSHED STONE OR COMPACTED SOIL.

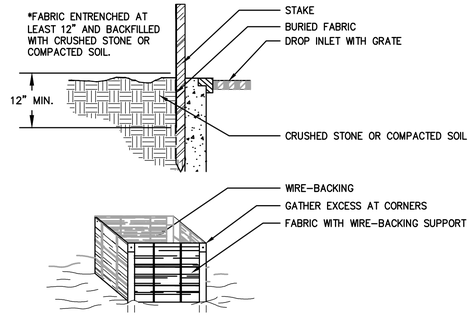

Sd2-F
FABRIC AND SUPPORTING FRAME FOR INLET PROTECTION
N.T.S.

EXIT DIAGRAM

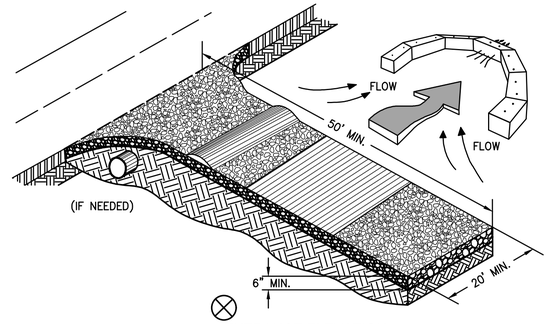

ENTRANCE ELEVATION

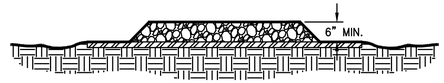

NOTES:
1. AVOID LOCATING ON STEEP SLOPES OR AT CURVES ON PUBLIC ROADS.
2. REMOVE ALL VEGETATION AND OTHER UNSUITABLE MATERIAL FROM THE FOUNDATION AREA, GRADE, AND CROWN FOR POSITIVE DRAINAGE.
3. AGGREGATE SIZE SHALL BE IN ACCORDANCE WITH NATIONAL STONE ASSOCIATION R-2 (1.5"-3.5" STONE).
4. GRAVEL PAD SHALL HAVE A MINIMUM THICKNESS OF 6".
5. PAD WIDTH SHALL BE EQUAL FULL WIDTH AT ALL POINTS OF VEHICULAR EGRESS, BUT NO LESS THAN 20'.
6. A DIVERSION RIDGE SHOULD BE CONSTRUCTED WHEN GRADE TOWARD PAVED AREA IS GREATER THAN 2%.
7. INSTALL PIPE UNDER THE ENTRANCE IF NEEDED TO MAINTAIN DRAINAGE DITCHES.
8. WHEN WASHING IS REQUIRED, IT SHOULD BE DONE ON AN AREA STABILIZED WITH CRUSHED STONE THAT DRAINS INTO AN APPROVED SEDIMENT TRAP OR SEDIMENT BASIN (DIVERT ALL SURFACE RUNOFF AND DRAINAGE FROM THE ENTRANCE TO A SEDIMENT CONTROL DEVICE).
9. WASHRACKS AND/OR TIRE WASHERS MAY BE REQUIRED DEPENDING ON SCALE AND CIRCUMSTANCE. IF NECESSARY, WASHRACK DESIGN MAY CONSIST OF ANY MATERIAL SUITABLE FOR TRUCK TRAFFIC THAT REMOVE MUD AND DIRT.
10. MAINTAIN AREA IN A WAY THAT PREVENTS TRACKING AND/OR FLOW OF MUD ONTO PUBLIC RIGHTS-OF-WAYS. THIS MAY REQUIRE TOP DRESSING, REPAIR AND/OR CLEANOUT OF ANY MEASURES USED TO TRAP SEDIMENT.

Co
CRUSHED STONE CONSTRUCTION EXIT
N.T.S.

SIDE VIEW

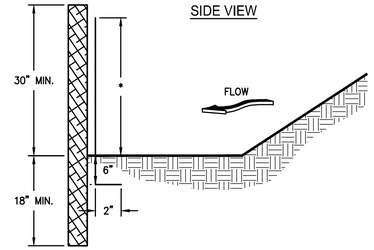

FRONT VIEW

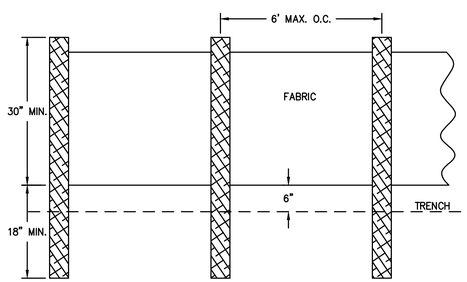

NOTES:
1. USE STEEL OR WOOD POSTS OR AS SPECIFIED BY THE EROSION, SEDIMENTATION, AND POLLUTION CONTROL PLAN.
2. HEIGHT (*) IS TO BE SHOWN ON THE EROSION, SEDIMENTATION, AND POLLUTION CONTROL PLAN.
3. SILT FENCE - TYPE NON-SENSITIVE (Sd1-NS) SHALL MEET THE SPECIFICATIONS OF SILT FENCE, TYPE C AS DESCRIBED IN SECTION 171 OF THE "GDOT STANDARD SPECIFICATIONS CONSTRUCTION OF TRANSPORTATION SYSTEMS", 2013 EDITION.

Sd1-NS
SILT FENCE - TYPE NON-SENSITIVE
N.T.S.

SIDE VIEW

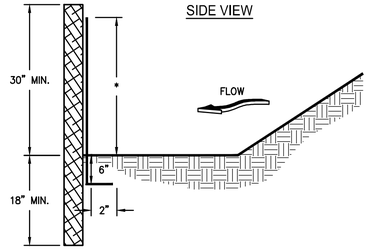

FRONT VIEW

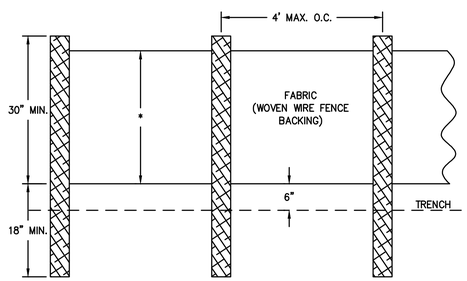

NOTES:
1. USE STEEL OR WOOD POSTS OR AS SPECIFIED BY THE EROSION, SEDIMENTATION, AND POLLUTION CONTROL PLAN.
2. HEIGHT (*) IS TO BE SHOWN ON THE EROSION, SEDIMENTATION, AND POLLUTION CONTROL PLAN.
3. SILT FENCE - TYPE SENSITIVE (Sd1-S) SHALL MEET THE SPECIFICATIONS OF SILT FENCE, TYPE C AS DESCRIBED IN SECTION 171 OF THE "GDOT STANDARD SPECIFICATIONS CONSTRUCTION OF TRANSPORTATION SYSTEMS", 2013 EDITION.

Sd1-S
SILT FENCE - TYPE SENSITIVE
N.T.S.

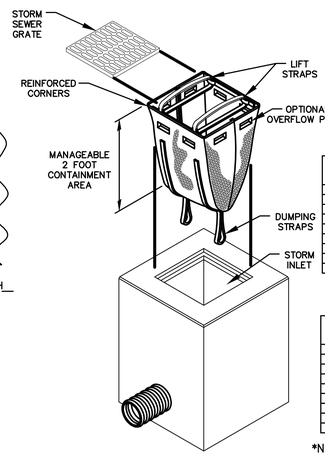

DANDY SACK™ SPECIFICATIONS

NOTE: THE DANDY SACK™ WILL BE **MANUFACTURED IN THE U.S.A.** FROM A WOVEN MONOFILAMENT FABRIC THAT MEETS OR EXCEEDS THE FOLLOWING SPECIFICATIONS:

REGULAR FLOW DANDY SACK™ (BLACK)

Mechanical Properties	Test Method	Units	MARV
Grab Tensile Strength	ASTM D 4632	kN (lbs)	1.78 (400) x 1.40 (315)
Grab Tensile Elongation	ASTM D 4632	%	15 x 15
Puncture Strength	ASTM D 4833	kN (lbs)	0.67 (150)
Mullen Burst Strength	ASTM D 3786	kPa (psi)	5506 (800)
Trapezoid Tear Strength	ASTM D 4533	kN (lbs)	0.67 (150) x 0.73 (165)
UV Resistence	ASTM D 4355	%	90
Apparent Opening Size	ASTM D 4751	Mm (US Std Sieve)	0.425 (40)
Flow Rate	ASTM D 4491	1/min/m² (gal/min/ft²)	2852 (70)
Permittivity	ASTM D 4491	Sec⁻¹	0.90

HI-FLOW DANDY SACK™ (SAFETY ORANGE)

Mechanical Properties	Test Method	Units	MARV
Grab Tensile Strength	ASTM D 4632	kN (lbs)	1.62 (365) X 0.89 (200)
Grab Tensile Elongation	ASTM D 4632	%	24 X 10
Puncture Strength	ASTM D 4833	kN (lbs)	0.40 (90)
Mullen Burst Strength	ASTM D 3786	kPa (psi)	3097 (450)
Trapezoid Tear Strength	ASTM D 4533	kN (lbs)	0.51 (115) X 0.33 (75)
UV Resistence	ASTM D 4355	%	90
Apparent Opening Size	ASTM D 4751	Mm (US Std Sieve)	0.425 (40)
Flow Rate	ASTM D 4491	1/min/m² (gal/min/ft²)	5907 (145)
Permittivity	ASTM D 4491	Sec⁻¹	2.1

*Note: All Dandy Sacks™ can be ordered with our optional oil absorbent pillows

Sd2-P
INLET SEDIMENT TRAP (FOR DROP INLET USE)
N.T.S.

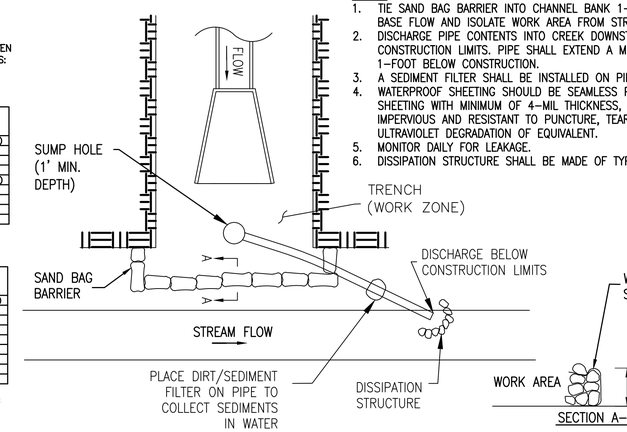

NOTES:
1. TIE SAND BAG BARRIER INTO CHANNEL BANK 1-FT ABOVE BASE FLOW AND ISOLATE WORK AREA FROM STREAM FLOW.
2. DISCHARGE PIPE CONTENTS INTO CREEK DOWNSTREAM OF CONSTRUCTION LIMITS. PIPE SHALL EXTEND A MINIMUM OF 1-FOOT BELOW CONSTRUCTION.
3. A SEDIMENT FILTER SHALL BE INSTALLED ON PIPE.
4. WATERPROOF SHEETING SHOULD BE SEAMLESS POLYETHYLENE SHEETING WITH MINIMUM OF 4-MIL THICKNESS, AND BE IMPERVIOUS AND RESISTANT TO PUNCTURE, TEARING, AND ULTRAVIOLET DEGRADATION OF EQUIVALENT.
5. MONITOR DAILY FOR LEAKAGE.
6. DISSIPATION STRUCTURE SHALL BE MADE OF TYPE 3 RIP RAP.

Sd1-B
SEDIMENT BARRIER (SAND BAGS)
N.T.S.

COPYRIGHT:
ARCADIS U.S., INC.
2016

IF THIS BAR IS NOT 1" INDICATED SCALE IS INCORRECT

NO.	DATE	ISSUED FOR	BY
0	JUL 2019	BIDDING	HG

SEALS

GEORGIA REGISTERED 07-31-2020 No. 033633 PROFESSIONAL ENGINEER ALTARRAL HAGEN II

ARCADIS
BPA
A Joint Venture
2839 Paces Ferry Road
Suite 900
Atlanta, GA 30339
Tel: 770-431-8666
Fax: 770-435-2666
www.arcadis-us.com

RESURGENS 1887 ATLANTA, GA. 1960

ATLANTA, GEORGIA
CITY OF ATLANTA
DEPARTMENT OF WATERSHED MANAGEMENT

EAST AREA WATER QUALITY CONTROL FACILITY IMPROVEMENTS

W.01.02.0085

SHEET TITLE
EROSION CONTROL DETAILS 1

DATE:	JULY 2019
PROJECT NO.:	GABPA134
DESIGNED BY:	A. JACOBS
DRAWN BY:	J. BROWN
CHECKED BY:	A. SHARP

SCALE: NONE

C-012

SHEET 17 OF 150

User: TTHOMAS Spec: AUS-NCSMOD File: I:\ACAD\PROJ\GABPA134 - CSO GROUP 1\BID PACKAGE 2\SHEETS\DWILC-012.DWG Scale: 1:1 SavedDate: 7/23/2019 Time: 14:32 Plot Date: 7/30/2019, 08:46 : Layout: 17

SEEDING SCHEDULE TEMPORARY COVER

SPECIES	BROADCAST RATES – PLS PER ACRE	BROADCAST RATES – PLS PER 1000 SQ. FT.	PLANTING DATES (SOLID LINES INDICATE OPTIMUM DATES, DOTTED LINES INDICATED PERMISSIBLE BUT MARGINAL DATES.) J F M A M J J A S O N D
BARLEY (HORDEUM VULGARE)			
ALONE	3 BU. (144 LBS.)	3.3 LB.	
IN MIXTURES	½ BU. (24 LBS.)	0.6 LB.	
LESPEDEZA, ANNUAL (LEZPEDEZA STRIATA)			
ALONE	40 LBS.	0.9 LB.	
IN MIXTURES	10 LBS.	0.2 LB.	
LOVEGRASS, WEEPING (ERAGROSTIS CURVULA)			
ALONE	4 LBS.	0.1 LB.	
IN MIXTURES	2 LBS.	0.05 LB.	
MILLET, BROWNTOP (PANCIUM FASCICULATUM)			
ALONE	40 LBS.	0.9 LB.	
IN MIXTURES	10 LBS.	0.2 LB.	
MILLET, PEARL (PENNESETUM GLAUCUM)			
ALONE	50 LBS.	1.1 LB.	
OATS (AVENA SATIVA)			
ALONE	4 BU. (128 LBS.)	2.9 LB.	
IN MIXTURES	1 BU. (32 LBS.)	0.7 LB.	
RYE (SECALE CEREALE)			
ALONE	3 BU. (168 LBS.)	3.9 LB.	
IN MIXTURES	½ BU. (28 LBS.)	0.6 LB.	
RYE (SECALE CEREALE)			
ALONE	3 BU. (168 LBS.)	3.9 LB.	
IN MIXTURES	½ BU. (28 LBS.)	0.6 LB.	
RYEGRASS, ANNUAL (LOLIUM TEMULENTUM)			
ALONE	40 LBS.	0.9 LB.	
SUDANGRASS (SORGHUM SUDANESE)			
ALONE	60 LBS.	1.4 LB.	
WHEAT (TRITICUM AESTIVUM)			
ALONE	3 BU. (180 LBS.)	4.1 LB.	
IN MIXTURES	½ BU. (30 LBS.)	0.7 LB.	

LIME: APPLY AT A RATE OF ONE TON PER ACRE

FERTILIZER: APPLY 500–700 POUNDS OF 10–10–10 OR EQUIVALENT PER ACRE

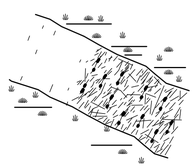

ESTABLISHING A TEMPORARY PROTECTION FOR DISTURBED AREAS USING SPECIFIC MULCH MATERIALS

1. MULCH MATERIALS SHALL CONSIST OF DRY STRAW OR HAY AT 2.5 TONS PER ACRE, WOOD CHIPS AT 6 TO 9 TONS PER ACRE, EROSION CONTROL FABRIC.
2. THIS STANDARD APPLIES TO GRADES OR CLEARED AREAS WHICH MAY BE SUBJECTED TO EROSION CONTROL FOR 6 MONTHS OR LESS AND CAN BE STABILIZED WITH A MULCH COVER.

Ds1 DISTURBED AREA STABILIZATION (WITH MULCHING)

SEEDING SCHEDULE PERMANENT COVER

SPECIES	BROADCAST RATES – PLS PER ACRE	BROADCAST RATES – PLS PER 1000 SQ. FT.	PLANTING DATES (SOLID LINES INDICATE OPTIMUM DATES, DOTTED LINES INDICATED PERMISSIBLE BUT MARGINAL DATES.) J F M A M J J A S O N D
BERMUDA, SPRIGS (CYNODON DACTYLON)			
COASTAL COMMON OR TIFT 44	40 CU. FT. OR SOD PLUGS 3'X3'	0.9 CU. FT.	
BERMUDA, COMMON (CYNODON DACTYLON)			HULLED SEED / UNHULLED SEED
ALONE	10 LBS.	0.2 LB.	
W/ OTHER PERRENIALS	6 LBS.	0.1 LB.	
FESCUE, TALL (FESTUCA ARUNDINACEA)			
ALONE	50 LBS.	1.1 LB.	
W/OTHER PERRENIALS	30 LBS.	0.7 LB.	
CROWNVTECH (CORONILLA VARIA) W/WINTER ANNUALS OR COOL SEASON GRASSES	15 LBS.	0.3 LB.	
REED CANARY GRASS (PHARLARIS ARUNDINACEA)			
ALONE	50 LBS.	1.1 LB.	
W/OTHER PERRENIALS	30 LBS.	0.7 LB.	
CENTIPEDE (EREMOCHLOA OPHIUROIDES)	BLACK SOD ONLY		
LOVEGRASS, WEEPING (ERAGROSTIS CURVULA)			
ALONE	4 LBS.	0.1 LB.	
W/OTHER PERRENIALS	2 LBS.	0.05 LB.	
LESPEDEZA, SERICEA (LESPEDEZA CUNEATA)			
SCARIFIED	60 LBS.	1.4 LB.	
UNSCARIFIED	75 LBS.	1.7 LB.	
SEED–BEARING HAY	3 TONS	138 LB.	

NOTE:
1. YOU MAY USE ANY OTHER SPECIES IF APPROVED BY MANUAL OF EROSION AND SEDIMENT CONTROL IN GEORGIA, LATEST EDITION.
2. ALL FERTILIZER RATE AND APPLICATION, SEED QUALITY, SEEDBED PREPERATION, INNOCULANTS, PLANTING, AND MULCHING SHALL COMPLY WITH MANUAL OF EROSION AND SEDIMENT CONTROL IN GEORGIA, LATEST EDITION.
3. APPLICATION RATES FOR LIME, FERTILIZER, AND SEED SHALL BE IN ACCORDANCE WITH THE MORE STRINGENT REQUIREMENTS OF SECTION 32 92 00 OR THE RATES LISTED ABOVE.

FERTILIZER REQUIREMENTS PERMANENT COVER

TYPE OF SPECIES	YEAR	ANALYSIS OR EQUIVALENT N–P–K	RATE	N TOP DRESSING RATE
1. COOL SEASON GRASSES	FIRST	6–12–12	1500 lbs./AC.	50–100 lbs./AC. 1/2/
	SECOND	6–12–12	1000 lbs./AC.	——
	MAINTENANCE	10–10–10	400 lbs./AC.	30 lbs./AC.
2. COOL SEASON GRASSES & LEGUMES	FIRST	6–12–12	1500 lbs./AC.	0–50 lbs./AC. 1/
	SECOND	10–10–10	1000 lbs./AC.	——
	MAINTENANCE	10–10–10	400 lbs./AC.	——
3. GROUND COVERS	FIRST	10–10–10	1300 lbs./AC. 3/	——
	SECOND	10–10–10	1300 lbs./AC. 3/	——
	MAINTENANCE	10–10–10	1100 lbs./AC.	——
4. PINE SEEDLINGS	FIRST	20–10–5	ONE 21–GRAM PELLET PER SEEDLING PLACED IN THE CLOSING HOLE	——
5. SHRU LESPEDEZA	FIRST	0–10–10	700 lbs./AC.	——
	MAINTENANCE	0–10–10	700 lbs./AC. 4/	——
6. TEMPORARY COVER CROPS SEEDED ALONE	FIRST	10–10–10	500 lbs./AC.	30 lbs./AC. 5/
7. WARM SEASON GRASSES	FIRST	6–12–12	1500 lbs./AC.	50–100 lbs./AC. 2/6/
	SECOND	6–12–12	800 lbs./AC.	50–100 lbs./AC. 2/
	MAINTENANCE	10–10–10	400 lbs./AC.	30 lbs./AC.
8. WARM SEASON GRASSES & LEGUMES	FIRST	6–12–12	1500 lbs./AC.	50 lbs./AC. 6/
	SECOND	0–10–10	1000 lbs./AC.	——
	MAINTENANCE	0–10–10	400 lbs./AC.	——

LIME: APPLY AT A RATE OF ONE TON PER ACRE

1/ APPLY IN SPRING FOLLOWING SEEDING.
2/ APPLY IN SPLIT APPLICATIONS WHEN HIGH RATES ARE USED.
3/ APPLY IN 3 SPLIT APPLICATIONS.
4/ APPLY WHEN PLANTS ARE PRUNED.
5/ APPLY TO GRASS SPECIES ONLY.
6/ APPLY WHEN PLANTS GROW TO A HEIGHT OF 2 TO 4 INCHES.

ESTABLISHING A TEMPORARY VEGETATIVE COVER WITH FAST GROWING SEEDINGS.

1. < 12 MONTHS OR UNTIL ESTABLISHMENT OF FINISHED GRADE OR PERMANENT VEGETATION.
2. SITE PREPARATION:
   – GRADING AND SHAPING
   – SEEDBED PREPARATION
   – APPLY LIME AND FERTILIZER
   – PLANT SEEDINGS, SELECT SPECIES BY SEASON AND REGION
   – APPLY MULCHING MATERIAL IF NEEDED
   – IRRIGATE IF NEEDED BUT NOT @ RATE TO CAUSE EROSION
3. PLANTING DATES DEPEND ON SPECIES AND REGION (MOUNTAIN, PIEDMONT OR COASTAL)

NOTES:
CONTRACTOR SHALL STABILIZE ALL AREAS WITH TEMPORARY VEGETATION THAT ARE TO BE EXPOSED WITHOUT STORM WATER PROTECTION FOR LONGER THAN 7 DAYS.

Ds2 DISTURBED AREA STABILIZATION (WITH TEMPORARY SEEDINGS)

BLANKET AND MATTING CROSS-SECTIONS

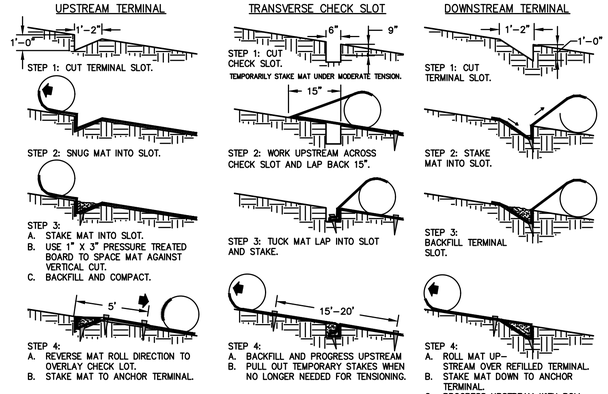

SEQUENTIAL ROLL RUN OUT IN CHANNELS

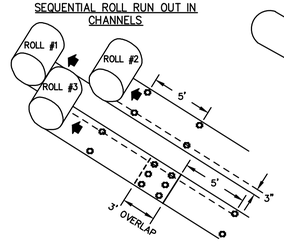

PICTORAL VIEW OF TRANSVERSE SLOT

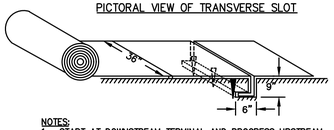

NOTES:
1. START AT DOWNSTREAM TERMINAL AND PROGRESS UPSTREAM.
2. FIRST ROLL IS CENTERED LONGITUDINALLY IN MID–CHANNEL AND PINNED WITH TEMPORARY STAKES TO MAINTAIN ALIGNMENT.
3. SUBSEQUENT ROLLS FOLLOW IN STAGGERED SEQUENCE BEHIND THE FIRST ROLL. USE THE CENTER ROLL FOR ALIGNMENT TO THE CHANNEL CENTER.
4. WORK OUTWARDS FROM THE CHANNEL CENTER TO THE EDGE.
5. USE 3" OVERLAPS AND STAKE AT 5' INTERVALS ALONG THE SEAMS.
6. USE 3' OVERLAPS AND SHINGLE DOWNSTREAM TO CONNECT THE LINING AT THE ROLL ENDS.
7. REFER TO THE "GDOT STANDARD SPECIFICATIONS CONSTRUCTION OF TRANSPORTATION SYSTEMS, 2013 EDITION. THE CONTRACTOR MAY ELECT TO USE EITHER SECTION 712 – FIBERGLASS BLANKET, SECTION 713 – ORGANIC AND SYNTHETIC MATERIAL FIBER BLANKET (EXCEPT DO NOT USE TYPE II WOOD FIBER BLANKET), SECTION 714 – JUTE MESH EROSION CONTROL ON SLOPES.

Ss SLOPE STABILIZATION

ESTABLISHING A PERMANENT VEGETATIVE COVER AS A DISTURBED AREA.

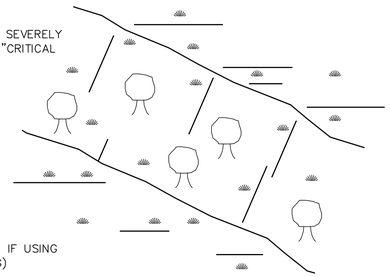

1. APPLICABLE ON HIGHLY ERODIBLE OR SEVERELY ERODED AREAS, SOMETIMES CALLED "CRITICAL AREAS" INCLUDING:
   – CUT OR FILL SLOPES
   – EARTH SPILLWAYS
   – BORROW AREAS
   – CHANNEL BANKS
   – BERMS
   – ROADSIDES
   – SPOIL AREAS
   – GULLIED LANDS
2. GRADING AND SHAPING REQ'D. WHERE FEASIBLE AND PRACTICAL.
3. SEEDBED PREPARATION (NOT REQ'D. IF USING HYDRAULIC SEEDING AND FERTILIZING)

SLOPE	SEEDBED
3:1 OR FLATTER	> 4" DEEP
2:1 TO 3:1	1" TO 4" DEEP
2:1 OR STEEPER	DEPRESSIONS EVERY 6"–8" WITH HAND TOOL

4. HAVE SOIL ANALYZED FOR LIME AND FERTILIZER RATE AND UTILIZE ANALYSIS TO DETERMINE LIME AND FERTILIZER RATE.
5. MULCH ALL SLOPES STEEPER THAN 3%, IN BOTTOM OF SPILLWAYS, AND ON ROAD BANKS.
6. ANCHOR MULCH IMMEDIATELY.

Ds3 DISTURBED AREA STABILIZATION (WITH PERMANENT VEGETATION)

COPYRIGHT: ARCADIS U.S., INC. 2016

IF THIS BAR IS NOT 1" INDICATED SCALE IS INCORRECT

NO.	DATE	ISSUED FOR	BY
0	JUL 2019	BIDDING	HG

SEALS

GEORGIA REGISTERED 07-31-2019 No. 033633 PROFESSIONAL ENGINEER ALLA RAE HAGEN II

ARCADIS BPA A Joint Venture
2839 Paces Ferry Road
Suite 900
Atlanta, GA 30339
Tel: 770–431–8666
Fax: 770–435–2666
www.arcadis–us.com

RESURGENS 1901 ATLANTA, GA. 2001

ATLANTA, GEORGIA
CITY OF ATLANTA
DEPARTMENT OF WATERSHED MANAGEMENT

EAST AREA WATER QUALITY CONTROL FACILITY IMPROVEMENTS

W.01.02.0085

SHEET TITLE

EROSION CONTROL DETAILS 2

DATE:	JULY 2019
PROJECT NO.:	GABPA134
DESIGNED BY:	A. JACOBS
DRAWN BY:	J. BROWN
CHECKED BY:	A. SHARP

SCALE: NONE

C–013

SHEET 18 OF 150

User:TTHOMAS Spec:AUS–NCSMOD File:I:\ACAD\PROJ\GABPA134 – CSO GROUP 1\BID PACKAGE 2\SHEETS\CIVIL\C–013.DWG Scale:1:1 SavedDate:7/23/2019 Time:15:42 Plot Date: Thomas, Travis; 7/30/2019, 08:47 : Layout:18

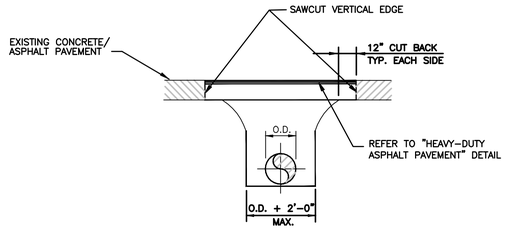

ASPHALT PAVEMENT

1 C-014 TYPE 1 PAVEMENT REPLACEMENT

SCALE: N.T.S.

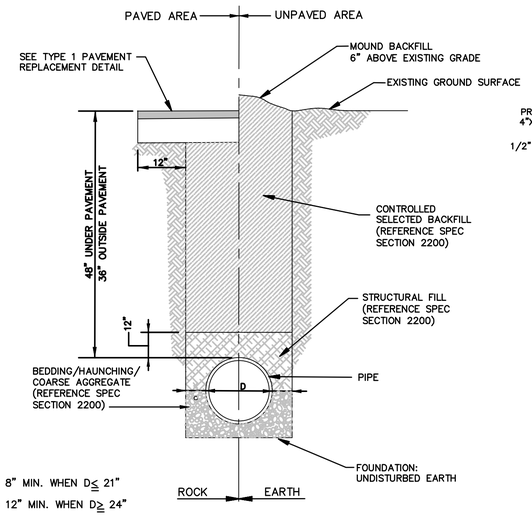

2 C-014 DIP BEDDING AND HAUNCHING

SCALE: N.T.S.

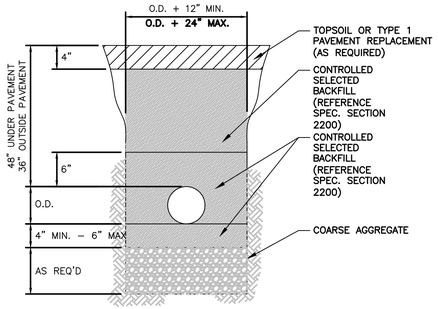

2A C-014 PVC & HDPE ≤ 12" PIPE DIA. BEDDING DETAIL

SCALE: N.T.S.

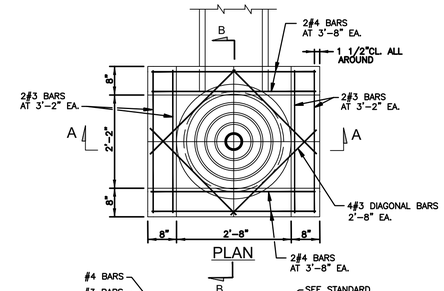

3 C-014 STANDARD DROP INLET YARD INLET

SCALE: N.T.S.

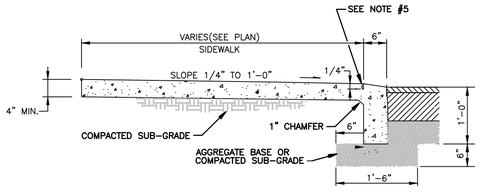

NOTES:

1. SIDEWALK SHALL BE SCRIBED WITH TRANSVERSE CONTROL JOINTS IN SQUARES EQUAL TO SIDEWALK WIDTH BUT NOT TO EXCEED 10 FEET.
2. CONCRETE SHALL BE 3,000 P.S.I. MIN. STRENGTH.
3. EXPANSION JOINTS SHALL EXTEND ACROSS THE FULL WIDTH OF THE SIDEWALK. CONTROL JOINTS SHALL BE LOCATED ON EACH SIDE OF A DRIVEWAY AND NOT MORE THAN 100 FEET APART.
4. PREFORMED BITUMINOUS MATERIAL SHALL BE PLACED BETWEEN ALL FIXED OBJECTS AND THE NEW CONCRETE SIDEWALK.
5. 1/4" TOOLED JOINT BETWEEN CURB AND SIDEWALK.

4 C-014 STANDARD MONOLITHIC SIDEWALK AND CURB

SCALE: N.T.S.

TYPICAL CONNECTION TO HIGH DENSITY POLYETHELYNE (HDPE) PIPE USING ELECTRIC FUSION SADDLE (DIAMETER RANGE 6-inch TO 24-inch)

TYPICAL CONNECTION TO HDPE– NOTES

1. ENSURE AREA OF PIPE WHERE FUSING TO BE DONE IS CLEAN AFTER SCRAPING USING APPROVED SCRAPING TOOL. MAKING SURE THAT 0.001-INCH TO 0.010-INCH ONLY IS REMOVED. LIMITED USE OF ISOPROPYL ACID IS PERMITTED TO PREPARE FUSION AREA AFTER SCRAPING.
2. CHECK PIPE FOR OUT-OF-ROUND CONDITION. IF AREA TO BE FUSED IS FOUND TO BE OUT-OF-ROUND REPLACE OUT-OF-ROUND SECTION OF PIPE IF REQUIRED PRIOR TO MAKING CONNECTION. USE A 0.015-INCH FEELER GAGE TO CHECK GAP BETWEEN PIPE AND FITTING.
3. USE HOLE SAW BEFORE PLACING FITTING TO CUT AN ENTRANCE HOLE SAME AS INSIDE DIAMETER OF BRANCH SADDLE FOR T-CLAMP TO BE INSERTED THROUGH.
4. IDENTIFY LOCATION OF FITTING TO BE INSTALLED ON PIPE AND MARK WITH NON-GREASY MARKER. CAREFULLY ARRANGE FOR CONCENTRIC PLACEMENT OF SADDLE OVER HOLE AND RESTRAIN USING T-CLAMP.
5. ATTACH PROCESSOR LEADS TO FITTING AND PROCEED WITH FUSION.
6. KEEP PIPE AND FITTING FULLY RESTRAINED UNTIL AFTER THE PIPING HAS COMPLETED THE ENTIRE FUSION CYCLE AND COMPLETED THE RECOMMENDED COOLING TIME. (NOTE TIME REQUIRED BEFORE CLAMP REMOVAL AND MARK IT ON FITTING IF NECESSARY).
7. ASTM D 2513 /3035.
8. BACKFILL PER CITY SPECIFIC "SEWER AND ACCESSORIES" REQUIREMENTS.
9. ENSURE ALL SUBMITTALS COMPLY WITH THE DEPARTMENT OF WATERSHED MANAGEMENT SITE DEVELOPMENT PLAN REVIEW.
10. FOR CONNECTION DETAILS > 24-INCH DIAMETER SPECIFIC CONSTRUCTION DETAILS SHALL BE PROPOSED BY DEVELOPER AND SHALL BE SUBJECT TO CITY STANDARD.

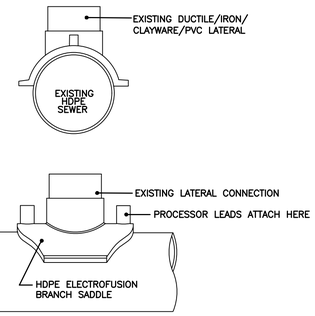

LATERAL SIZE			
4-INCH		6-INCH	
6"X4" IPS	DR11	8"X6" IPS	DR17
		10"X6" IPS	DR17
		12"X6" IPS	DR17
		14"X6" IPS	DR17
		16"X6" IPS	DR17
		18"X6" IPS	DR17
		24"X6" IPS	DR17

5 C-014 CONNECTION TO POLYETHELYNE PIPE

SCALE: N.T.S.

NOTES:

1. CONCRETE SHALL BE 3000 PSI
2. EXPANSION JOINTS SHALL BE IN ACCORDANCE WITH AASHTO M153 OR M213
3. SURFACE TEXTURE OF RAMP SHALL BE STABLE, FIRM AND SLIP-RESISTANT CAST-IN-PLACE TRUNCATED DOME TILE OR OTHER SURFACE. TEXTURE TO BE APPROVED BY THE ENGINEER.
4. SLOPE OF THE RAMP SHALL BE 1:12.
5. RAMPS SHALL BE ADA COMPLIANT.

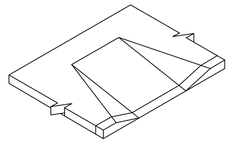

ISOMETRIC

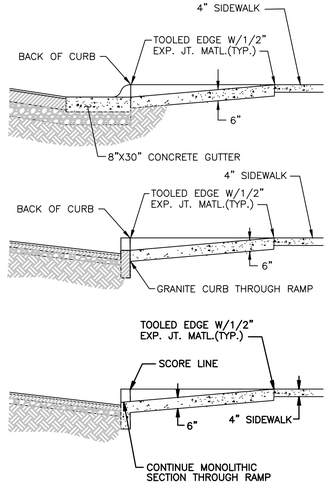

SECTIONS

6 C-014 STANDARD WHEELCHAIR RAMP

SCALE: N.T.S.

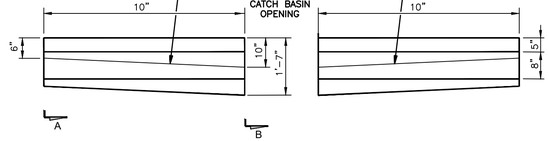

ELEVATION

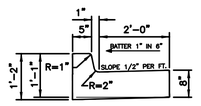

SECTION A-A

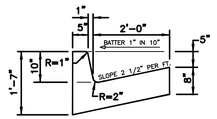

SECTION B-B

NOTES:.

1. SECTIONS, WHERE DIRECTED BY THE ENGINEER MAY BE CONSTRUCTED IN UNIFORM LENGTHS OF TWENTY (20) FT. ON TANGENT. LENGTH MAY BE REDUCED FOR CLOSURE AND AT CORNERS TO NO LESS THAN SIX(6) FEET.
2. CONCRETE CURB AND GUTTER SHALL BE IN ACCORDANCE WITH GEORGIA DOT. SPECIFICATIONS SECTION 441.

7 C-014 CONCRETE CURB AND GUTTER

SCALE: N.T.S.

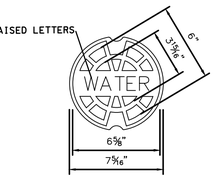

TOP VIEW LID

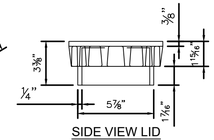

SIDE VIEW LID

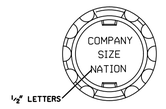

BOTTOM VIEW LID

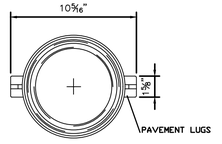

TOP VIEW RISER

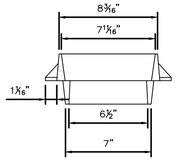

SIDE VIEW RISER

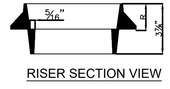

RISER SECTION VIEW

TOLERANCE SHOULD BE ±1/16" PER FOOT UNLESS OTHERWISE SPECIFIED

8 C-014 BURIED VALVE BOX & RISER

SCALE: N.T.S.

COPYRIGHT: ARCADIS U.S., INC. 2016

IF THIS BAR IS NOT 1" INDICATED SCALE IS INCORRECT

NO.	DATE	ISSUED FOR	BY
0	JUL 2019	BIDDING	HG

SEALS

GEORGIA REGISTERED 07-31-2019 No. 033833 PROFESSIONAL ENGINEER ALTARRAL HAGEN, II

ARCADIS A Joint Venture
BPA
2839 Paces Ferry Road
Suite 900
Atlanta, GA 30339
Tel: 770-431-8666
Fax: 770-435-2666
www.arcadis-us.com

RESURGENS 1876 ATLANTA, GA. 1961

ATLANTA, GEORGIA
CITY OF ATLANTA
DEPARTMENT OF WATERSHED MANAGEMENT

EAST AREA WATER QUALITY CONTROL FACILITY IMPROVEMENTS

W.01.02.0085

SHEET TITLE

MISCELLANEOUS CIVIL DETAILS 1

DATE:	JULY 2019
PROJECT NO.:	GABPA134
DESIGNED BY:	W. HACKETT
DRAWN BY:	J. BROWN
CHECKED BY:	A. SHARP

SCALE: NONE

C-014

SHEET 19 OF 150

User:TTHOMAS Spec:AUS-NCSMOD File:I:\ACADVPROJ\GABPA134 – CSO GROUP 1\BID PACKAGE 2\SHEETS\CIVIL\C-014.DWG Scale:1:1 SavedDate:7/23/2019 Time:15:49 Plot Date: Thomas, Travis; 7/30/2019; 08:47 : Layout:19

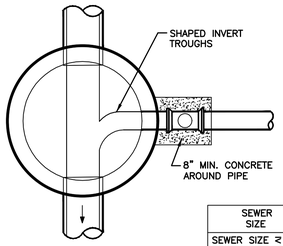

PLAN

SEWER SIZE	DROP SIZE
SEWER SIZE ≥ 12"	SEWER SIZE
16"–20"	12"
24"–30"	18"
36" AND OVER	24"

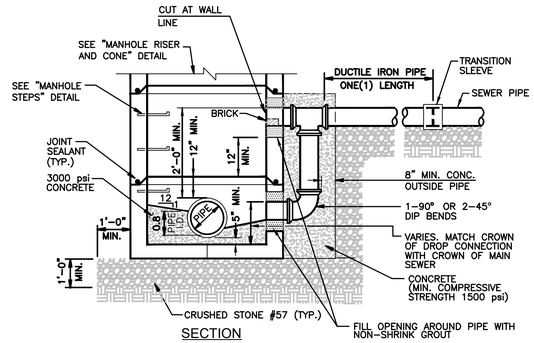

SECTION

NOTE: POUR CONCRETE AGAINST UNDISTURBED EARTH OR FORM. IF FORMED, FILL VOID UNDER PIPE WITH CRUSHED STONE.

1 C-015 MANHOLE BASE WITH DROP CONNECTION

SCALE: N.T.S.

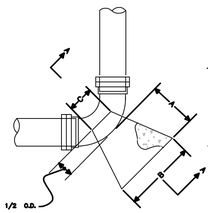

ELEVATION

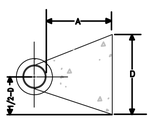

SECTION A

MINIMUM DIMENSIONS IN FEET FOR CONCRETE BLOCKING

BEND	SIZE	A	B	C	D	VOLUME CUBIC YARD
11 ¼°	6"	1.0	1.0	7"	1.0	0.03
	8"	1.0	1.25	7"	1.0	0.04
	12"	1.0	2.0	11"	2.0	0.1
	16"	2.0	3.0	15"	2.0	0.3
	20"	2.0	3.0	19"	3.0	0.5
	24"	3.0	4.0	22"	3.0	0.8
22 ½°	6"	1.0	1.5	7"	1.0	0.04
	8"	1.0	2.0	7"	2.0	0.1
	12"	2.0	3.0	11"	2.0	0.3
	16"	2.0	4.0	15"	3.0	0.6
	20"	3.0	5.0	19"	3.0	0.1
	24"	4.0	6.0	22"	4.0	2.3
45°	6"	1.5	2.0	7"	1.5	0.11
	8"	2.0	3.0	7"	2.0	0.3
	12"	2.0	4.0	11"	3.0	0.7
	16"	3.0	5.0	15"	4.0	1.4
	20"	4.0	6.0	19"	5.0	2.8
	24"	5.0	8.0	22"	6.0	5.0
90°	6"	1.75	2.5	7"	2.0	0.2
	8"	2.0	3.0	7"	3.0	0.4
	12"	4.0	6.0	11"	4.0	2.1
	16"	4.0	7.0	15"	5.0	3.1
	20"	5.0	8.0	19"	7.0	5.3
	24"	6.0	10.0	22"	8.0	10.5
TEES AND PLUGS	6"	1.5	2.0	7"	1.75	0.13
	8"	2.0	3.0	7"	2.0	0.3
	12"	2.0	4.0	11"	4.0	0.8
	16"	3.0	5.0	15"	5.0	1.8
	20"	4.0	7.0	19"	6.0	3.9
	24"	5.0	8.0	22"	7.0	5.5

NOTES:
1. SOIL CONDITIONS SHALL BE VERIFIED BY THE ENGINEER BEFORE THRUST BLOCK DESIGN IS IMPLEMENTED.
2. DIMENSION OF THRUST BLOCK IS BASED ON 2000 POUNDS PER SQUARE FOOT SOIL BEARING PRESSURE AND 250 LBS. PER SQUARE INCH TEST PRESSURE.
3. CONCRETE SHALL BE CLASS B, 3000 P.S.I. HIGH EARLY.
4. USE 6" SIZE DIMENSIONS FOR 4" PIPE

2 C-015 TYPICAL HORIZONTAL THRUST BOX

SCALE: N.T.S.

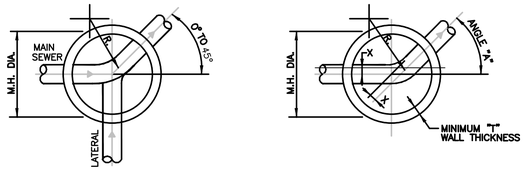

STANDARD MANHOLE SCHEDULE OF GOVERNING DIMENSIONS

PIPE SIZE	ANGLE "A"	M.H. DIA.	"T"	"X"
8" TO 15"	0° TO 90°	4'–0"	5"	0"
18" TO 24"	0° TO 60°	4'–0"	5"	0"
18" TO 24"	60° TO 90°	5'–0"	6"	6"
27" TO 30"	0° TO 30°	5'–0"	6"	0"
27" TO 30"	30° TO 60°	5'–0"	6"	6"
27" TO 30"	60° TO 90°	6'–0"	7"	8"
36"	0° TO 90°	6'–0"	7"	0"
42"	0° TO 90°	7'–0"	8"	8"
42"	0° TO 60°	8'–0"	9"	6"
48"	0° TO 45°	8'–0"	9"	6"
48"	60° TO 90°	12'–0"	13"	6"
54"	0° TO 60°	8'–0"	9"	6"
54"	60° TO 90°	12'–0"	13"	6"
60"	0° TO 30°	8'–0"	9"	0"
60"	30° TO 45°	8'–0"	9"	6"
60"	45° TO 60°	10'–0"	11"	6"
60"	60° TO 90°	12'–0"	13"	8"

NOTE:
MINIMUM ℄ RADIUS (R) OF M.H. INVERT = 1.5 x PIPE DIAMETER

3 C-015 MANHOLE PLAN & DIAMETERS

SCALE: N.T.S.

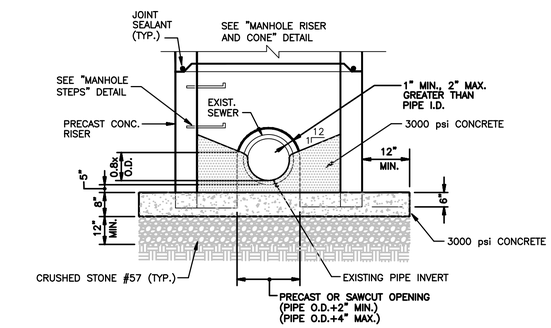

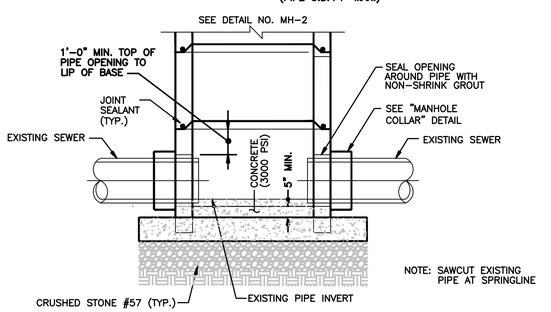

4 C-015 MANHOLE OVER EXISTING SEWER

SCALE: N.T.S.

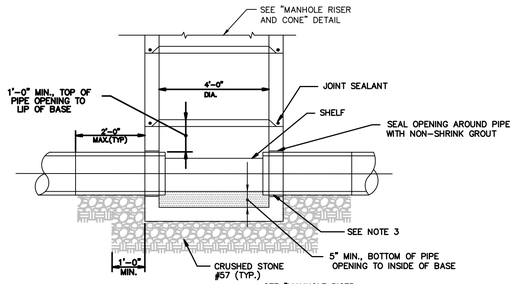

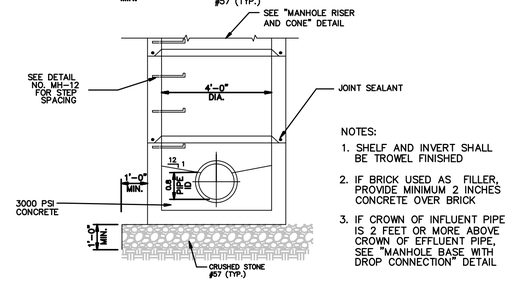

NOTES:
1. SHELF AND INVERT SHALL BE TROWEL FINISHED
2. IF BRICK USED AS FILLER, PROVIDE MINIMUM 2 INCHES CONCRETE OVER BRICK
3. IF CROWN OF INFLUENT PIPE IS 2 FEET OR MORE ABOVE CROWN OF EFFLUENT PIPE, SEE "MANHOLE BASE WITH DROP CONNECTION" DETAIL

5 C-015 MANHOLE BASE

SCALE: N.T.S.

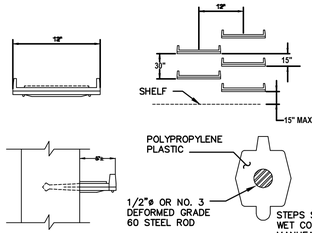

STEPS SHALL BE PLACED INTO WET CONCRETE WALL DURING MANUFACTURE OR MORTORED INTO HOLES AFTER CONCRETE HAS SET

6 C-015 MANHOLE STEPS

SCALE: N.T.S.

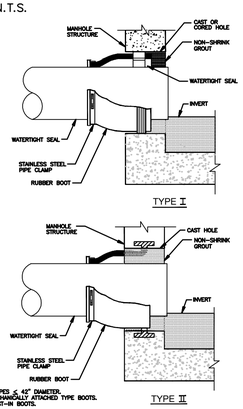

NOTES:
1. USE BOOTS FOR PIPES ≤ 42" DIAMETER.
2. TYPE I IS FOR MECHANICALLY ATTACHED TYPE BOOTS.
3. TYPE II IS FOR CAST-IN BOOTS.

7 C-015 BOOT CONNECTION

SCALE: N.T.S.

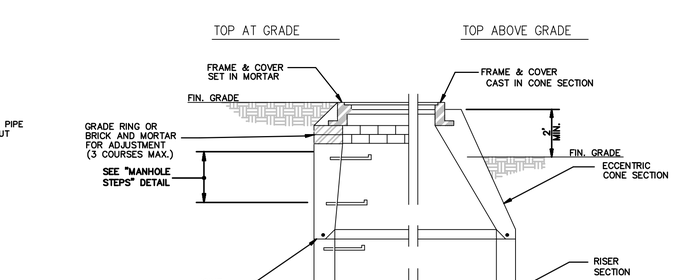

8 C-015 MANHOLE RISER AND CONE

SCALE: N.T.S.

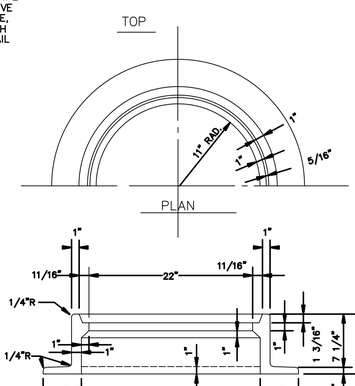

NOTE:
(1) RIM AND COVER TO BE GRAY IRON CASTING ACCORDING TO ASTM A-48-30.
(2) RIM AND COVER MUST BE FITTED BEFORE LEAVING SHOP.
(3) SANITARY SEWER OR STORM SEWER LETTERS AS REQUIRED
(4) SOLID COVER AS REQUIRED

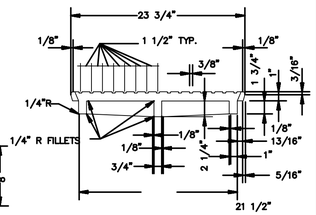

SECTION

9 C-015 FRAME AND COVER

SCALE: N.T.S.

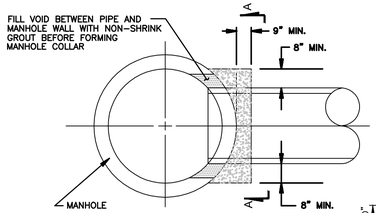

PLAN

MANHOLE COLLARS SHALL BE USED FOR SEWER CONNECTIONS TO MANHOLES:
1.) IF EXIST. MANHOLE IS BRICK
2.) IF SEWER > 42" DIAMETER.
3.) IF MANHOLE IS CONSTRUCTED OVER EXIST. SEWER.
4.) TO REPAIR TYPE II BOOT CONNECTION.

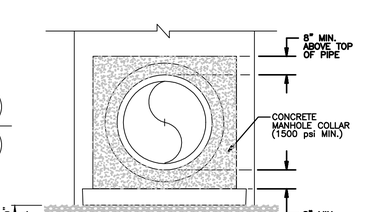

SECTION A-A

10 C-015 MANHOLE COLLAR

SCALE: N.T.S.

COPYRIGHT:
ARCADIS U.S., INC.
2016

IF THIS BAR IS NOT 1" INDICATED SCALE IS INCORRECT

NO.	DATE	ISSUED FOR	BY
0	JUL 2019	BIDDING	HG

SEALS

GEORGIA REGISTERED 07-31-2019 No. 033633 PROFESSIONAL ENGINEER ALI ARRAL HAGEN II

ARCADIS
BPA
A Joint Venture
2839 Paces Ferry Road
Suite 900
Atlanta, GA 30339
Tel: 770-431-8666
Fax: 770-435-2666
www.arcadis-us.com

ATLANTA, GEORGIA
CITY OF ATLANTA
DEPARTMENT OF WATERSHED MANAGEMENT

EAST AREA WATER QUALITY CONTROL FACILITY IMPROVEMENTS

W.01.02.0085

SHEET TITLE

MISCELLANEOUS CIVIL DETAILS 2

DATE:	JULY 2019
PROJECT NO.:	GABPA134
DESIGNED BY:	W. HACKETT
DRAWN BY:	J. BROWN
CHECKED BY:	A. SHARP

SCALE: NONE

C-015

SHEET 20 OF 150

User: TTHOMAS Spec: AUS-NCSMOD File: I:\ACAD\PROJ\GABPA134 - CSO GROUP 1\BID PACKAGE 2\SHEETS\CIVIL\C-015.DWG Scale: 1:1 SavedDate: 7/23/2019 Time: 15:52 Plot Date: Thursday, July 25, 2019 - 08:49 : Layout: 20

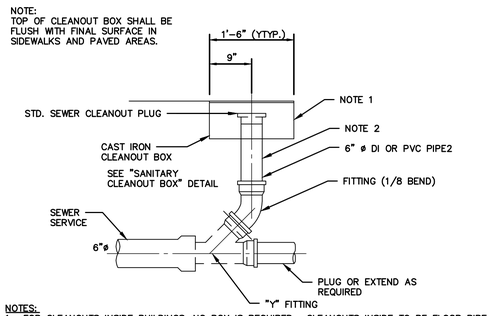

NOTES:
1. FOR CLEANOUTS INSIDE BUILDINGS, NO BOX IS REQUIRED. CLEANOUTS INSIDE TO BE FLOOR PIPE PENETRATIONS WITH COVER PLATE FLUSH WITH FFE.
2. FOR CLEANOUTS ON PRESSURE LINES, USE RESTRAINED JOINT PIPE AND FITTINGS, CAP WITH BLIND FLANGE.

1 C-016 SERVICE CONNECTION CLEANOUT

SCALE: N.T.S.

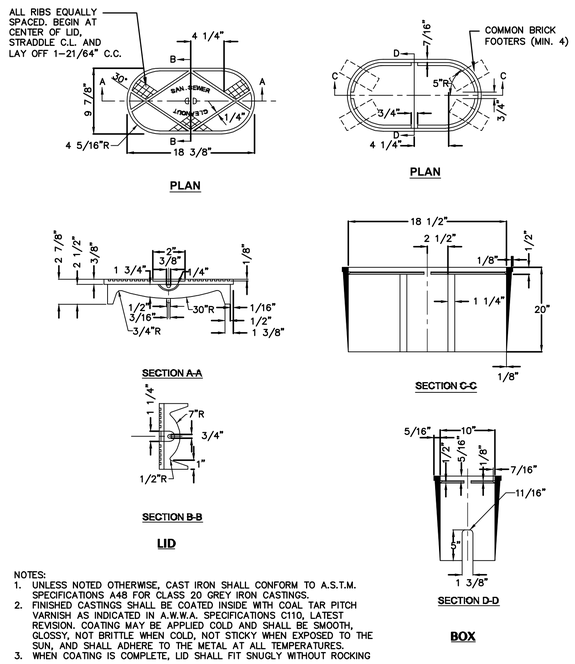

NOTES:
1. UNLESS NOTED OTHERWISE, CAST IRON SHALL CONFORM TO A.S.T.M. SPECIFICATIONS A48 FOR CLASS 20 GREY IRON CASTINGS.
2. FINISHED CASTINGS SHALL BE COATED INSIDE WITH COAL TAR PITCH VARNISH AS INDICATED IN A.W.W.A. SPECIFICATIONS C110, LATEST REVISION. COATING MAY BE APPLIED COLD AND SHALL BE SMOOTH, GLOSSY, NOT BRITTLE WHEN COLD, NOT STICKY WHEN EXPOSED TO THE SUN, AND SHALL ADHERE TO THE METAL AT ALL TEMPERATURES.
3. WHEN COATING IS COMPLETE, LID SHALL FIT SNUGLY WITHOUT ROCKING

2 C-016 SANITARY CLEANOUT BOX

SCALE: N.T.S.

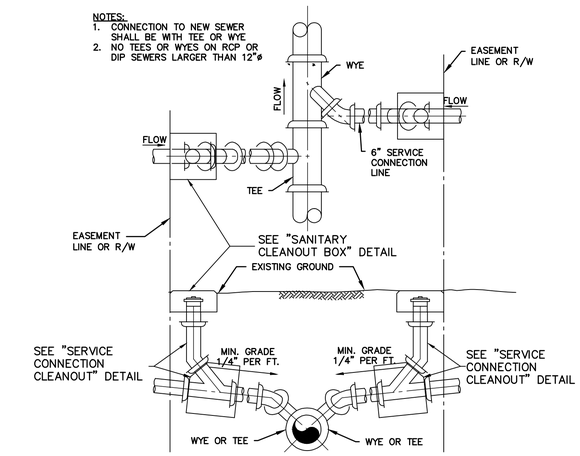

3 C-016 SERVICE CONNECTION ON NEW SEWERS

SCALE: N.T.S.

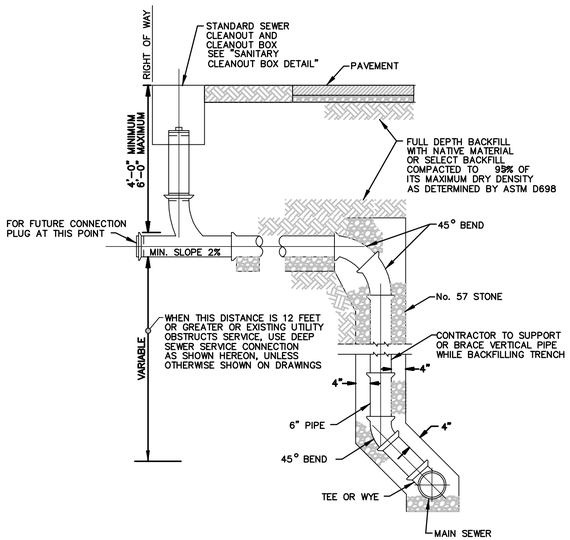

4 C-016 DEEP SEWER CONNECTION

SCALE: N.T.S.

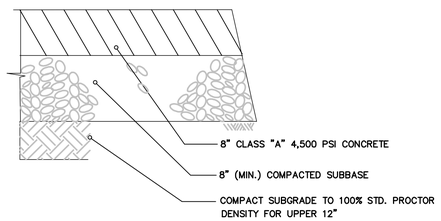

5 C-016 CONCRETE PAVEMENT

SCALE: N.T.S.

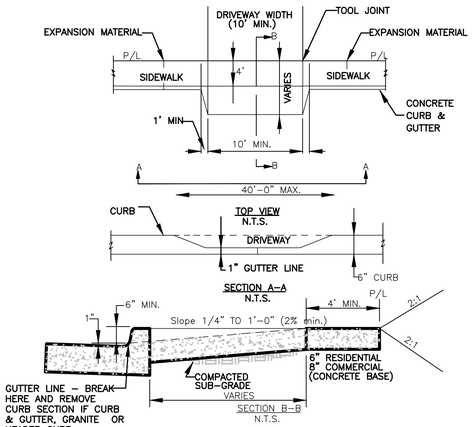

NOTE:
1. CAN EXCHANGE W./CONC. HEADER CURB OR GRANITE CURB
2. USE #4 BARS @ 18" O.C., EW. LOCATE REINFORCEMENT IN THE MIDDLE OF THE SLAB

6 C-016 CONCRETE APRON DETAIL

SCALE: N.T.S.

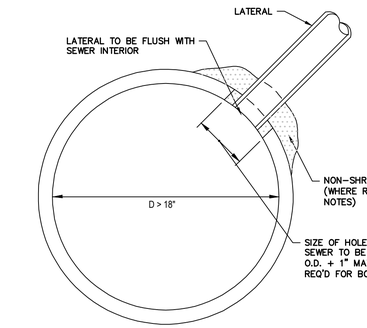

NOTES:
1. HOLE IN EXISTING SEWER SHALL BE CORED.
2. CONNECT SERVICE TO EXISTING SEWER WITH:
   - -BOOT ON RCP SEWERS.
   - -TAPPING SADDLE ON DIP SEWERS.
   - -NON-SHRINK GROUT ON BRICK SEWERS.
   - -BOOT OR NON-SHRINK GROUT ON VCP SEWERS.
   - -MANUFACTURED SADDLE ON PVC PIPE SEWERS.

8 C-016 LATERAL SEWER CONNECTION

SCALE: N.T.S.

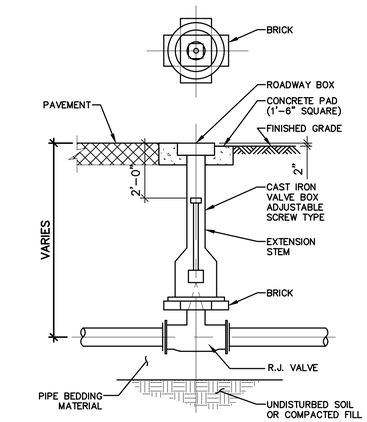

NOTES:
1. FOR PLUG VALVES, INSTALL VALVE WITH OPERATOR STEM IN THE HORIZONTAL ORIENTATION.

7 C-016 TYPICAL BURIED VALVE AND VALVE BOX INSTALLATION DETAIL

SCALE: N.T.S.

User:TTHOMAS Spec:AUS-NCSMOD File:I:\ACAD\PROJ\GABPA134 - CSO GROUP 1\BID PACKAGE 2\SHEETS\CIVIL\C-016.DWG Scale:1:1 SavedDate:2/27/2019 Time:10:59 Plot Date: Thomas, Travis; 7/30/2019; 08:49 :: Layout:21

COPYRIGHT:
ARCADIS U.S., INC.
2016

IF THIS BAR IS NOT 1" INDICATED SCALE IS INCORRECT

NO.	DATE	ISSUED FOR	BY
0	JUL 2019	BIDDING	HG

SEALS

GEORGIA REGISTERED 07-31-2019 No. 033633 PROFESSIONAL ENGINEER ALI ARRAJ HAGEN II

ARCADIS
BPA
A Joint Venture
2839 Paces Ferry Road
Suite 900
Atlanta, GA 30339
Tel: 770-431-8666
Fax: 770-435-2666
www.arcadis-us.com

RESURGENS 1871 ATLANTA, GA. 1960

ATLANTA, GEORGIA
CITY OF ATLANTA
DEPARTMENT OF WATERSHED MANAGEMENT

EAST AREA WATER QUALITY CONTROL FACILITY IMPROVEMENTS

W.01.02.0085

SHEET TITLE

MISCELLANEOUS CIVIL DETAILS 3

DATE: JULY 2019
PROJECT NO.: GABPA134
DESIGNED BY: W. HACKETT
DRAWN BY: J. BROWN
CHECKED BY: W. GRUBBS

SCALE: NONE

C-016

SHEET 21 OF 150

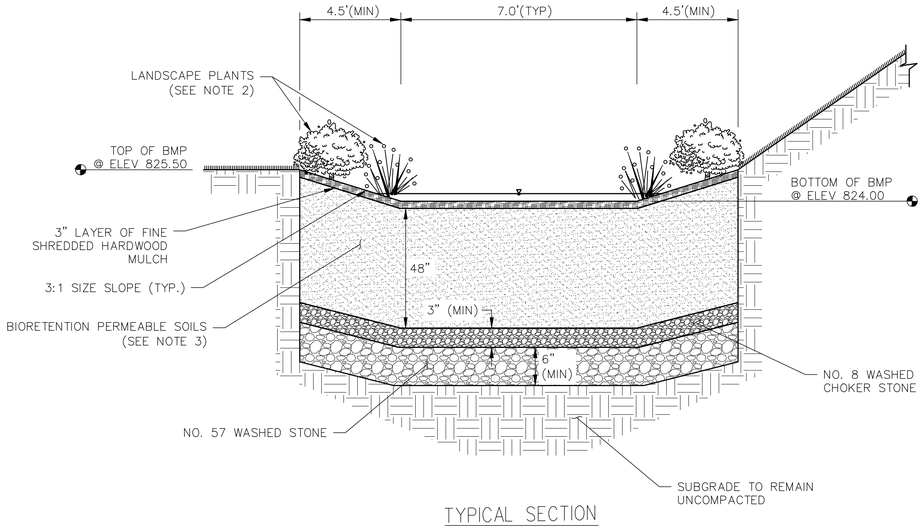

TYPICAL SECTION

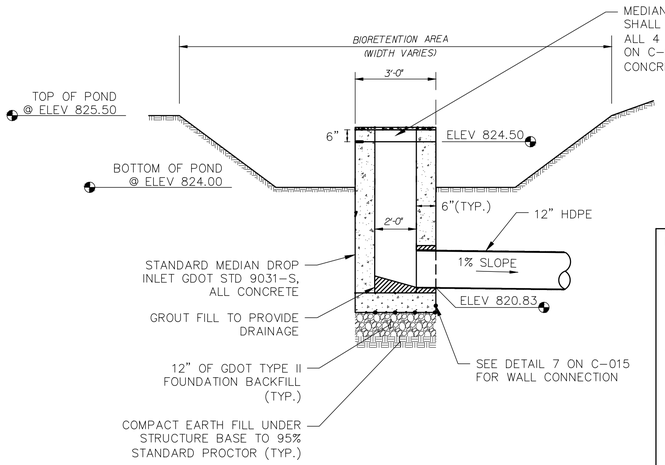

BIORETENTION AREA OUTLET STRUCTURE (GI-2) TYPICAL SECTION

SCALE: N.T.S.

BIORETENTION NOTES:

1. REFER TO GRADING PLAN FOR BANK SLOPES, HEIGHTS, AND DISTANCES.
2. REFER TO LANDSCAPE PLAN AND DETAILS FOR PLANTING REQUIREMENTS
3. BIORETENTION PERMEABLE SOILS:
   - 3.1. INSTALL AFTER STRUCTURES AND/OR PAVEMENT AND MAJOR GRADING ACTIVITIES TO KEEP CLEAN
   - 3.2. SOIL CONTENT:
     - 3.2.1. SAND: CLEAN WASHED SAND (35% – 60%)
     - 3.2.2. TOPSOIL: 20% – 30% TOPSOIL
     - 3.2.3. ORGANIC MATTER: 10% – 25%
     - 3.2.4. CLAY: LESS THAN 15%
   - 3.3. USDA SOIL TYPES: SANDY LOAM OR LOAMY SAND
   - 3.4. INFILTRATION RATE: 0.5 INCHES/HOUR (MIN), 4 INCHES/HOUR (MAX)
   - 3.5. PHOSPHORUS INDEX (P-INDEX): LESS THAN 30
   - 3.6. pH: BETWEEN 6 AND 8
   - 3.7. EXCHANGE CAPACITY (CEC): GREATER THAN 10 MILLIEQUIVALENTS (MEQ) PER 100 GRAMS OF DRY WEIGHT

1 C-017 BIORETENTION AREA DETAILS

SCALE: N.T.S.

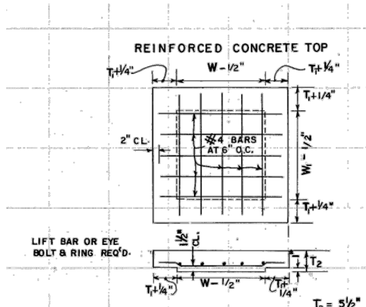

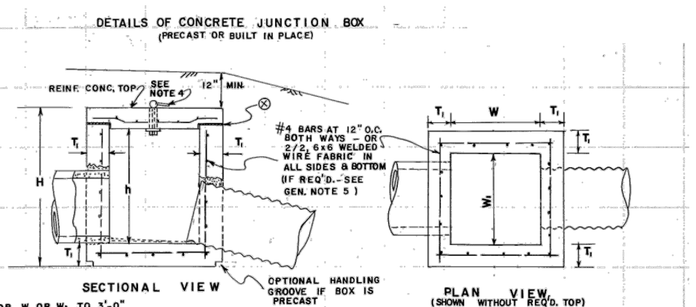

$T_2 = 3\frac{1}{2}$" FOR W OR W_1 TO 3'-0"
$T_2 = 8$" FOR W OR W_1 OVER 3'-0"

T = 6" FOR CONCRETE

SEE GEN. NOTE NO.3

DIMENSIONS FOR BRICK OR REINF CONC. BOX

PIPE SIZE	MIN. W OR W	MIN. h	MIN. H
15"	2'-0"	1'-9"	2'-9"
18"	2'-3"	2'-1"	3'-1"
24"	2'-10"	2'-8"	3'-8"
30"	3'-5"	3'-3"	4'-3"
36"	4'-0"	3'-10"	4'-9"
42"	4'-7"	4'-5"	5'-5"
48"	5'-2"	5'-0"	6'-0"

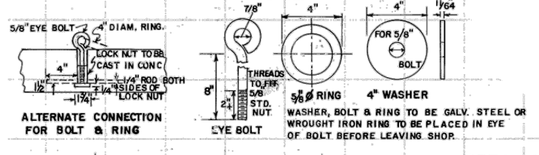

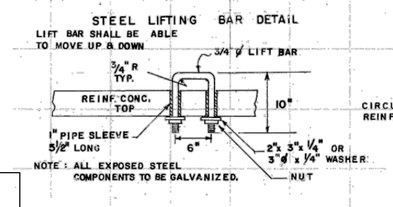

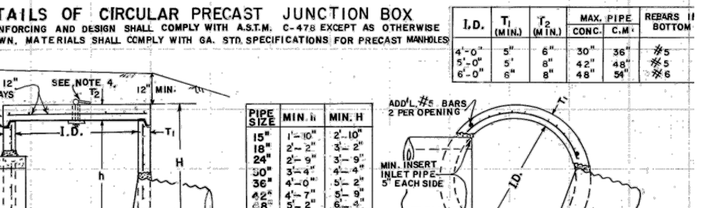

I.D.	T_1 (MIN.)	T_2 (MIN.)	MAX. PIPE CONC.	MAX. PIPE C.M.	REBARS IN BOTTOM
4'-0"	5"	6"	30"	36"	#5
5'-0"	5"	8"	42"	48"	#5
6'-0"	6"	8"	48"	54"	#6

PIPE SIZE	MIN. h	MIN. H
15"	1'-10"	2'-10"
18"	2'-2"	3'-2"
24"	2'-9"	3'-9"
30"	3'-4"	4'-4"
36"	4'-0"	5'-4"
42"	4'-7"	5'-9"
48"	5'-2"	6'-4"

GENERAL NOTES:

1. SPECIFICATIONS: GEORGIA STANDARD, CURRENT EDITION & SUPPLEMENTS THERETO.
2. ILLUSTRATED PIPES, PIPE JOINTS, ALIGNMENT, SIZES, ETC. ARE SHOWN AS REPRESENTATIVE, ACTUAL REQUIREMENTS VARY PER LOCATION AS INDICATED IN THE PLANS.
3. JUNCTION BOXES DO NOT HAVE TO BE CONSTRUCTED SQUARE. W & W1 DIMENSIONS MAY VARY ACCORDING TO PIPE SIZE.
4. ALL JUNCTION BOX TOPS SHALL BE EQUIPPED WITH EITHER AN EYE BOLT & RING (SHOWN) OR A LIFTING BAR (ALTERNATE).
5. REINFORCING IS REQUIRED FOR ALL PRECAST JUNCTION BOXES. REINFORCING MAY BE OMITTED FOR BUILT IN PLACE CONCRETE BOXES NOT OVER 10 FT. DEEP AND NOT LARGER THAN 3' x 5'. CONSTRUCTION JOINTS PERMITTED IF DOWELED OR KEYED. ALL JUNCTION BOX TOPS SHALL BE REINFORCED.

2 C-017 JUNCTION BOX DETAIL

SCALE: N.T.S.

COPYRIGHT: ARCADIS U.S., INC. 2016

IF THIS BAR IS NOT 1" INDICATED SCALE IS INCORRECT

NO.	DATE	ISSUED FOR	BY
0	JUL 2019	BIDDING	HG

SEALS

GEORGIA REGISTERED 07-31-2019 No. 033833 PROFESSIONAL ENGINEER ALI FARRAL HAGEN II

ARCADIS A Joint Venture
BPA
2839 Paces Ferry Road
Suite 900
Atlanta, GA 30339
Tel: 770-431-8666
Fax: 770-435-2666
www.arcadis-us.com

ATLANTA, GEORGIA
CITY OF ATLANTA
DEPARTMENT OF WATERSHED MANAGEMENT

EAST AREA WATER QUALITY CONTROL FACILITY IMPROVEMENTS

W.01.02.0085

SHEET TITLE

GREEN INFRASTRUCTURE DETAILS 1

DATE:	JULY 2019
PROJECT NO.:	GABPA134
DESIGNED BY:	A. HAGEN
DRAWN BY:	D. LAMB
CHECKED BY:	A. SHARP

SCALE: NONE

C-017

SHEET 22 OF 150

User:THOMAS Spec:AUS-NCSMOD File:I:\ACAD\PROJ\GABPA134 - CSO GROUP 1\BID PACKAGE 2\SHEETS\CIVIL\C-017-GI.DWG Scale:1:1 Saved Date:7/23/2019 Time:16:02 Plot Date: Thomas, Travis; 7/30/2019; 08:50 ; Layout:22

User: TTHOMAS Spec: AUS-NCSMOD File: I:\ACAD\PROJ\GABPA134 - CSO GROUP 1\BID PACKAGE 2\SHEETS\CIVIL\C-018-GI.DWG Scale:1:1 SavedDate:7/23/2019 Plot Date: Thomas, Travis; 7/30/2019; 08:50 ; Layout:23

DETAILS OF DROP INLET WITH DOUBLE WEIR OPENING

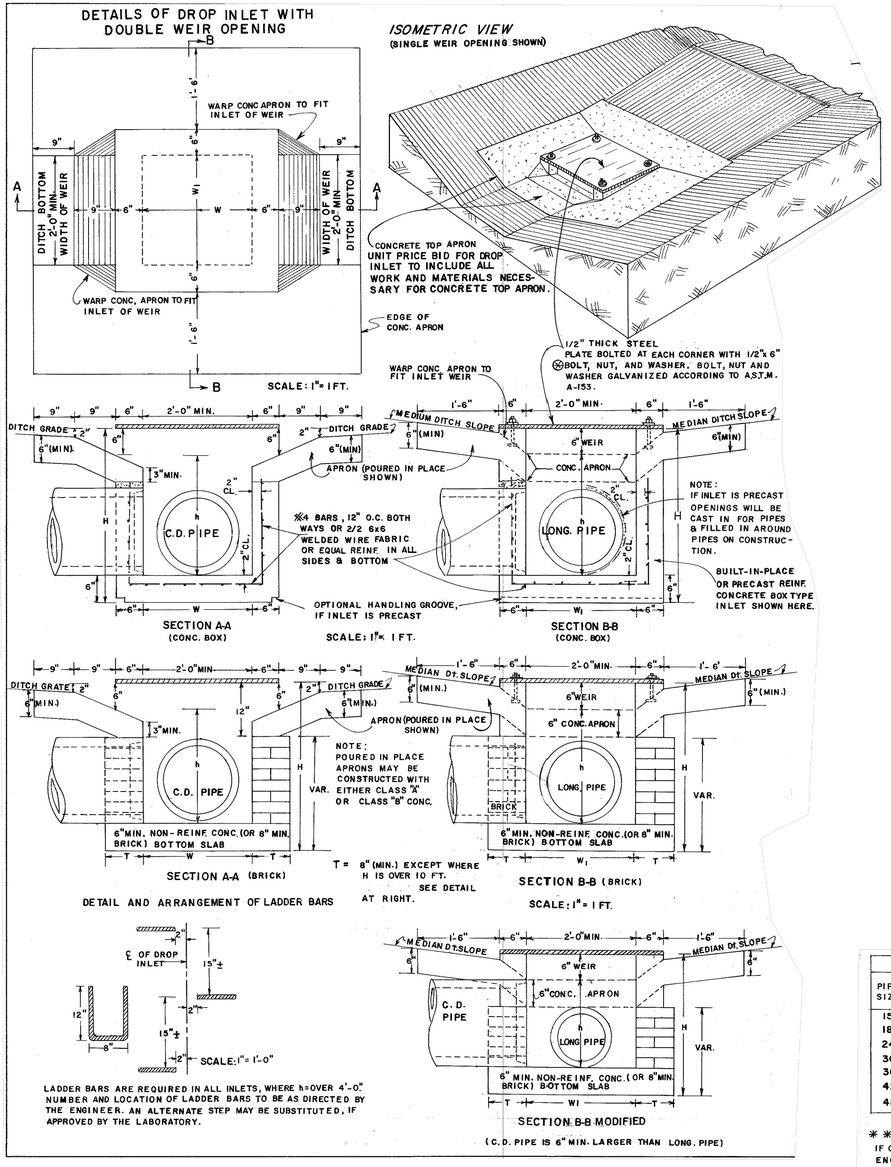

TYPICAL DROP INLET DIMENSIONS ✱ ✱											
PIPE SIZE	BRICK MASONRY							REINF. CONCRETE ✱			
	MIN. W OR W_1	MIN. H	MIN. h	a (MAX.)	b (MIN.)	MODIFIED MIN H	MODIFIED MIN. h	MIN. W OR W_1	MIN. H	MIN. h	a (MAX)
15"	2'-0"	3'-1"	2'-1"	—	—	2'-7½"	1'-7½"	2'-0"	3'-2"	2'-2"	—
18"	2'-3"	3'-10"	2'-10"	1½"	2⅛"	2'-11"	1'-11"	2'-3"	3'-5"	2'-5"	—
24"	2'-10"	4'-11"	3'-11"	5"	8⅝"	3'-6"	2'-6"	3'-0"	4'-10"	3'-10"	6"
30"	3'-5"	6'-0"	5'-0"	8½"	1'-2⅝"	4'-1"	3'-1"	3'-6"	5'-5"	4'-5"	9"
36"	4'-0"	7'-1"	6'-1"	1'-0"	1'-8¾"	—	—	4'-0"	6'-0"	5'-0"	1'-0"
42"	4'-7"	8'-6"	7'-2"	1'-3½"	2'-2¾"	—	—	4'-6"	6'-7"	5'-7"	1'-3"
48"	5'-2"	9'-7"	8'-3	1'-7"	2'-8⅝"	—	—	5'-0"	7'-2"	6'-2"	1'-6"

✱ BUILT-IN-PLACE OR PRECAST BOX

✱ ✱ DIMENSIONS ARE BASED UPON TYPICAL OUTSIDE DIAMETERS OF CONCRETE PIPE AND MAY BE VARIED IF CONDITIONS PERMIT, AND THE VARIED DIMENSIONS ARE SHOWN IN THE PLANS OR SPECIFIED BY THE ENGINEER. DIMENSIONS "a" ARE BASED UPON 2'-0" WEIR OPENING. MINIMUM H AND h ARE BASED UPON LARGEST PIPE INVOLVED. BOX ENCLOSURE FOR PIPE DOES NOT HAVE TO BE SQUARE. W AND W_1 DIMENSIONS MAY DIFFER. (DIMENSIONS HAVE BEEN SPECIFIED FOR BOX SHAPED INLETS. SEE STD. 1040 FOR DIMENSIONS OF CIRCULAR ALTERNATES.)

1 C-018 STANDARD MEDIAN DROP INLET

SCALE: N.T.S.

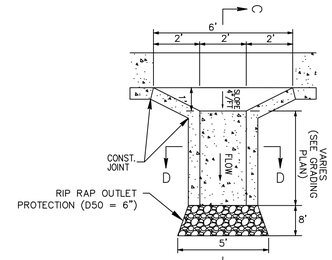

PLAN VIEW
N.T.S.

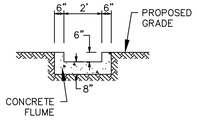

SECTION D-D - FRONT VIEW
N.T.S.

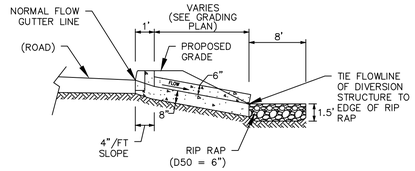

SECTION C-C - PROFILE VIEW
N.T.S.

2 C-018 CONCRETE FLUME DETAIL

SCALE: N.T.S.

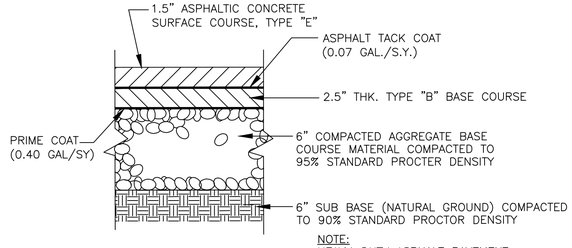

NOTE:
HEAVY-DUTY ASPHALT PAVEMENT TO BE CONSTRUCTED PER SPECIFICATION SECTION 02510

3 C-018 HEAVY-DUTY ASPHALT PAVEMENT SECTION

SCALE: N.T.S.

COPYRIGHT: ARCADIS U.S., INC. 2016

IF THIS BAR IS NOT 1" INDICATED SCALE IS INCORRECT

NO.	DATE	ISSUED FOR	BY
0	JUL 2019	BIDDING	HG

SEALS

GEORGIA REGISTERED 07-31-2019 No. 033633 PROFESSIONAL ENGINEER ALI HARRAL HAGEN II

ARCADIS BPA A Joint Venture
2839 Paces Ferry Road
Suite 900
Atlanta, GA 30339
Tel: 770-431-8666
Fax: 770-435-2666
www.arcadis-us.com

ATLANTA, GEORGIA
CITY OF ATLANTA
DEPARTMENT OF WATERSHED MANAGEMENT

EAST AREA WATER QUALITY CONTROL FACILITY IMPROVEMENTS

W.01.02.0085

SHEET TITLE

GREEN INFRASTRUCTURE DETAILS 2

DATE:	JULY 2019
PROJECT NO.:	GABPA134
DESIGNED BY:	A. HAGEN
DRAWN BY:	D. LAMB
CHECKED BY:	A. SHARP

SCALE: NONE

C-018

SHEET 23 OF 150

Plant Schedule					
QTY	**Botanical Name**	**Common Name**	**Size**	**Rt. Ball**	**Specifications**
Shrubs					
2	Aesculus pariviflora	Bottlebrush Buckeye	3 Gal.	Container	Healthy, vigorous, full, well rooted
6	Cephalanthus occidentalis	Common Buttonbush	3 Gal.	Container	Healthy, vigorous, full, well rooted
16	Aronia arbutifolia	Red Chokeberry	3 Gal.	Container	Healthy, vigorous, full, well rooted
5	Ilex glabra	Inkberry	3 Gal.	Container	Healthy, vigorous, full, well rooted
Zone 3-Shoreline Fringe (24" O.C. AVG. SPACING) EL. 824.0-824.5					
52	Andropogon glomeratus	Bushy Broom Grass	4" Pot	Container	Healthy, vigorous, full, well rooted
36	Chasmanthium latifolium	Upland Sea-Oats	4" Pot	Container	Healthy, vigorous, full, well rooted
28	Coreopsis tinctoria	Dwarf Tickseed	4" Pot	Container	Healthy, vigorous, full, well rooted
23	Lobelia cardinalis	Cardinal Flower	4" Pot	Container	Healthy, vigorous, full, well rooted
21	Osmunda cinnamomea	Cinnamon Fern	4" Pot	Container	Healthy, vigorous, full, well rooted
Zone 4-Riparian Fringe (24" O.C. AVG. SPACING) EL. 824.5-825.0					
20	Rudbeckia laciniata	Greenhead Coneflower	4" Pot	Container	Healthy, vigorous, full, well rooted
16	Vernonia gigantea	Ironweed	4" Pot	Container	Healthy, vigorous, full, well rooted
13	Eupatorium fistolosum	Joe Pye Weed	4" Pot	Container	Healthy, vigorous, full, well rooted
9	Sorghastrum nutans	Yellow Indian Grass	4" Pot	Container	Healthy, vigorous, full, well rooted
Zone 6-Upland Slopes (12" O.C. AVG. SPACING) from EL. 825					
636	Chamaecyparis thyoides	False Cypress	4" Pot	Container	Healthy, vigorous, full, well rooted

LEGEND:

- ZONE 3
- ZONE 4
- ZONE 6

811 KNOW WHAT'S BELOW CALL BEFORE YOU DIG

PLANTING SEASONS:

1. WOODY PLANT MATERIAL SHALL BE PLANTED BETWEEN SEPTEMBER 15 AND MARCH 15.
2. AQUATIC/WETLAND PLANT MATERIAL SHALL BE PLANTED BETWEEN APRIL 1 AND JUNE 15.

NOTE: ALL PLANTS SHALL BE TRUE SPECIES AS SPECIFIED IN THE PLANT SCHEDULE. NO VARIETIES OR CULTIVARS WILL BE ACCEPTED AS SUBSTITUTES.

ZONE PLANT SPACING: ZONE PLANTS SHALL BE INSTALLED IN A RANDOM FASHION WITH STAGGERED, IRREGULAR SPACING BETWEEN 1' AND 3' ON CENTER. FOR EACH ZONE, THE CONTRACTOR SHALL INCORPORATE A RANDOM MIXTURE OF THE SPECIFIED PLANTS THROUGHOUT THAT ZONE.

WOODY PLANT SPACING: SHRUBS SHALL BE INSTALLED IN A RANDOM FASHION WITH STAGGERED, IRREGULAR SPACING BETWEEN 5' AND 10' ON CENTER. PLANTING PLANS ILLUSTRATE PLANT GROUPINGS AND APPROXIMATE LOCATIONS. ADJUSTMENTS MAY BE REQUIRED BASED ON FIELD CONDITIONS.

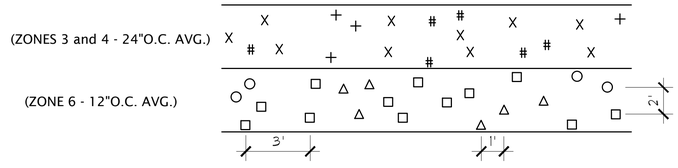

PLAN: TYPICAL AQUATIC/RIPARIAN PLANT DISTRIBUTION
N.T.S.

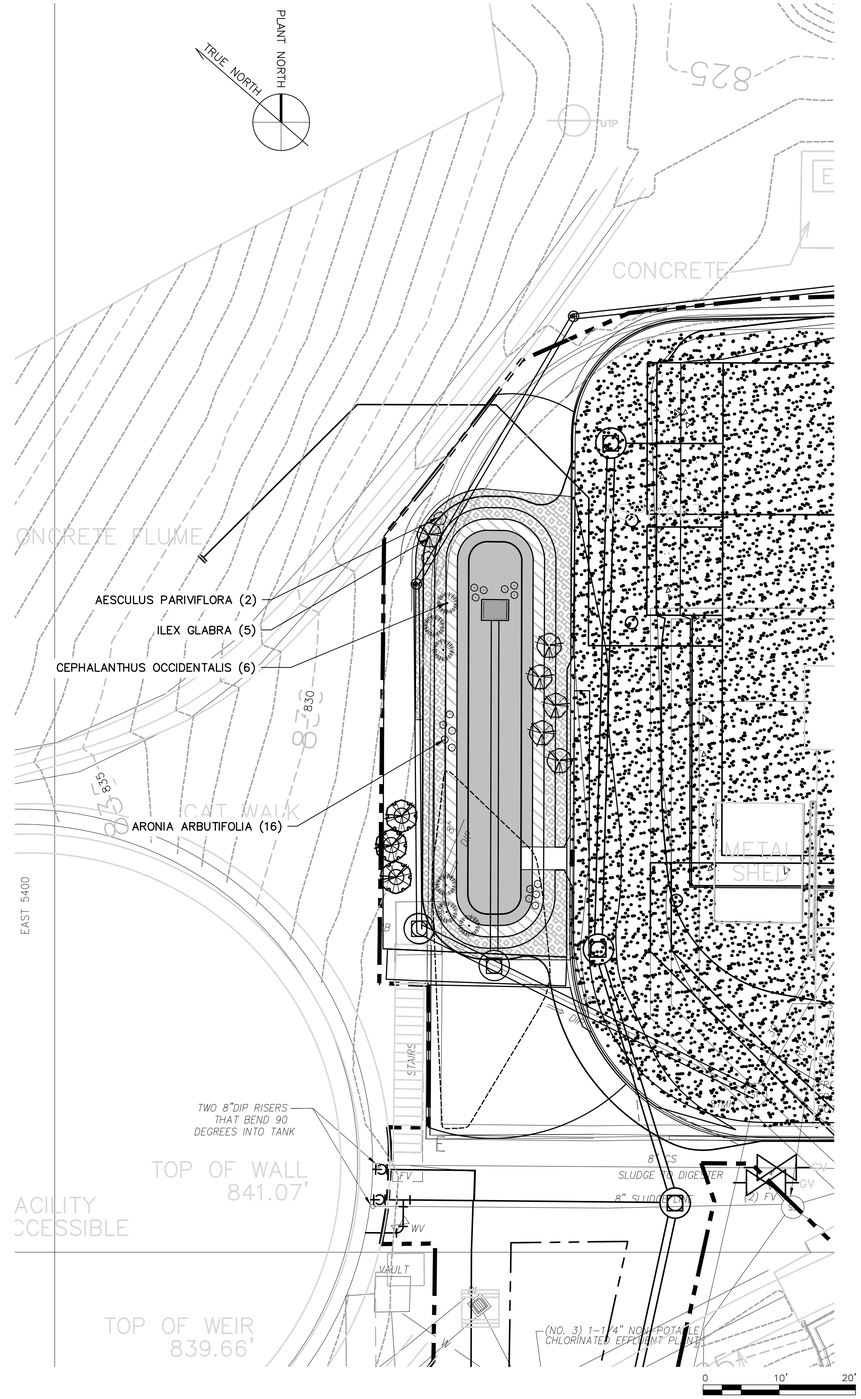

COPYRIGHT: ARCADIS U.S., INC. 2016

IF THIS BAR IS NOT 1" INDICATED SCALE IS INCORRECT

NO.	DATE	ISSUED FOR	BY
0	JUL 2019	BIDDING	HG

SEALS

GEORGIA REGISTERED 07-31-2019 No. 033833 PROFESSIONAL ENGINEER ALI ARRAL HAGEN, II

ARCADIS BPA A Joint Venture
2839 Paces Ferry Road
Suite 900
Atlanta, GA 30339
Tel: 770-431-8666
Fax: 770-435-2666
www.arcadis-us.com

ATLANTA, GEORGIA
CITY OF ATLANTA
DEPARTMENT OF WATERSHED MANAGEMENT

EAST AREA WATER QUALITY CONTROL FACILITY IMPROVEMENTS

W.01.02.0085

SHEET TITLE

LANDSCAPING PLAN

DATE: JULY 2019
PROJECT NO.: GABPA134
DESIGNED BY: M. DARTNELL
DRAWN BY: J. BROWN
CHECKED BY: A. HAGAN

SCALE: AS SHOWN

C-019

SHEET 24 OF 150

User: THOMAS Spec: AUS-NCSMOD File: I:\ACAD\PROJ\GABPA134 — CSO GROUP 1\BID PACKAGE 2\SHEETS\CIVIL\C-019.DWG Scale: 1:1 SavedDate: 2/21/2019 Time: 16:37 Plot Date: Thomas, Travis; 7/30/2019; 08:51 : Layout: 24

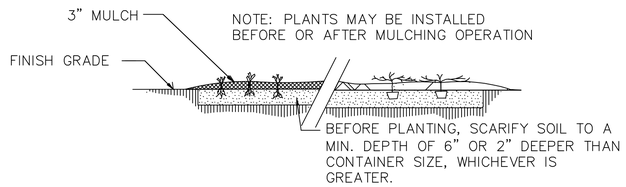

GROUND COVER/ BEDDING PLANT DETAIL

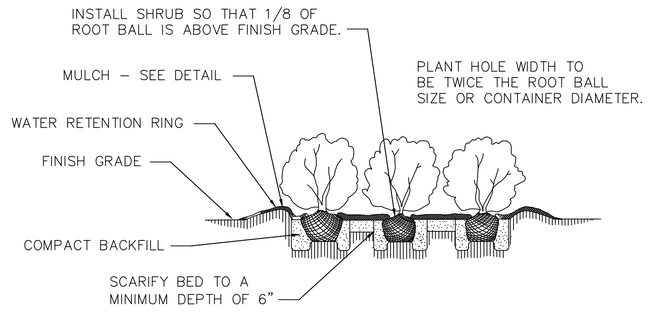

SHRUB BED PLANTING DETAIL

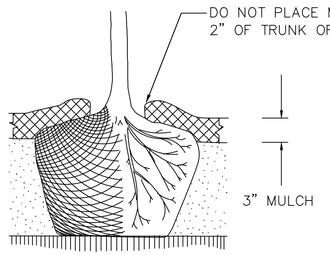

MULCH DETAIL

GROUND COVER, SHRUB BED AND MULCH NOTES:

1. APPLY FERTILIZER AT PLANTING TIME IN THE FORM OF A SLOW RELEASE PELLET OR TABLET. APPLY AT RATE RECOMMENDED BY MANUFACTURER. BOTH RATE AND FORMULATION MUST BE APPROVED BY FIELD ENGINEER PRIOR TO APPLICATION.
2. ALL PRUNING TO FOLLOW STANDARD ARBORICULTURAL PRACTICES AS SPECIFIED BY INTERNATIONAL SOCIETY OF ARBORICULTURE.
3. ALL SHRUBS AND SPREADING GROUND COVERS SHALL BE LOCATED A MINIMUM OF THREE (3) FEET FROM THE EDGE OF BEDS. SHRUBS AND GROUND COVERS NEED TO BE PLACED AT LEAST THREE (3) FEET FROM THE EDGE OF BEDS TO ALLOW FOR MATURE GROWTH AND TO AVOID CONFLICTS WITH PEDESTRIAN TRAFFIC, CURBS, OR GRASSED AREAS.

GENERAL PLANTING NOTES:

1. IN THE EVENT OF A DISCREPANCY BETWEEN THE PLANT SCHEDULE AND, THE PLANTING PLAN, THE PLAN WILL TAKE PRECEDENCE OVER THE SCHEDULE. THE CONTRACTOR SHALL BE RESPONSIBLE FOR HIS OWN QUANTITY CALCULATIONS AND THE LIABILITY PERTAINING TO THOSE QUANTITIES AND ANY OTHER RELATED CONTRACT DOCUMENTS AND/OR PRICE QUOTATIONS.
2. THE CONTRACTOR SHALL NOT CHANGE OR SUBSTITUTE PLANT VARIETIES OR SPECIES WITHOUT THE WRITTEN PERMISSION OF THE ENGINEER.
3. ALL LANDSCAPE MATERIAL SHALL CONFORM TO THE CURRENT STANDARDS OF THE AMERICAN STANDARD FOR NURSERY STOCK (ANSI Z60.1–2004) AND ARE SUBJECT TO THE APPROVAL OF THE ENGINEER.
4. THE CONTRACTOR SHALL MAKE PERIODIC INSPECTIONS OF THE PROJECT DURING THE WARRANTY PERIOD TO ENSURE THAT THE ESTABLISHMENT RATE OF GROWTH IS ADEQUATE. ANY METHODS OR PRODUCTS DEEMED NOT NORMAL OR DETRIMENTAL TO GOOD PLANT GROWTH SHALL BE REPORTED TO THE CITY IN WRITING. FAILURE TO INSPECT AND REPORT WILL BE INTERPRETED AS APPROVAL, AND THE CONTRACTOR SHALL BE RESPONSIBLE FOR ANY AND ALL REPLACEMENTS.
5. REFER TO CIVIL ENGINEERING PLANS FOR GRADING INFORMATION.
6. DO NOT SCALE FROM DRAWING.
7. NEW SHRUB PLANTING IS TO BE A MINIMUM OF 36" AWAY FROM EXISTING TREES.
8. PLANTING PLAN IS FOR THE LOCATION AND IDENTIFICATION OF VEGETATION ONLY. NO OTHER WORK IS TO BE PERFORMED BASED ON THIS PLAN.
9. CONTRACTOR SHALL ASSURE POSITIVE DRAINAGE OF ALL PLANTING PITS AND PLANT BEDS PRIOR TO INSTALLATION.
10. TOPSOIL WILL BE STOCKPILED FOR RE–USE IN LANDSCAPE WORK. IF ADDITIONAL TOPSOIL IS NEEDED TO COMPLETE THE WORK, CONTRACTOR SHALL IMPORT TOPSOIL AS SPECIFIED.

    PROVIDE NEW TOPSOIL THAT IS FERTILE, FRIABLE, NATURAL LOAM, SURFACE SOIL, REASONABLY FREE OF ROOTS, STUMPS AND LARGE STONES AND FREE OF BRUSH, WEEDS, LITTER, AND OTHER EXTRANEOUS OR TOXIC MATTER HARMFUL TO PLANT GROWTH.

    OBTAIN TOPSOIL FROM A COMMERCIAL SOURCE. OBTAIN TOPSOIL ONLY FROM NATURALLY, WELL DRAINED SITES WHERE TOPSOIL OCCURS IN A DEPTH OF NOT LESS THAN 4 INCHES. DO NOT OBTAIN FROM BOGS OR MARSHES.
11. QUALITY OF PLANT MATERIAL:

    ALL PLANTS SHALL BE FREE OF DISEASE AND/OR INSECTS, AND SHALL HAVE A HEALTHY ROOT SYSTEM WITH NO CIRCLING OR KINKED ROOTS. CONTAINER PLANTS SHALL NOT BE ROOT BOUND.

    TREES SHALL HAVE STRAIGHT TRUNKS,DENSE CANOPIES AND STRONG BRANCHING WITH GOOD CROTCH ANGLES.

    ALL PLANT MATERIAL SHALL BE SUFFICIENTLY WATERED TO WET THE ENTIRE ROOT BALL WITHIN TWO HOURS OF PLANTING.
12. MAINTENANCE: CONTRACTOR SHALL MAINTAIN ALL PLANT MATERIAL FROM THE TIME IT IS INSTALLED UNTIL FINAL ACCEPTANCE OR WHEN THE OWNER TAKES OVER MAINTENANCE, WHICHEVER OCCURS FIRST. MAINTENANCE SHALL INCLUDE BUT NOT BE LIMITED TO MOWING, EDGING, WEEDING, WATERING, PRUNING, ETC.
13. WARRANTY PERIOD: CONTRACTOR SHALL PROVIDE A TWO–YEAR WARRANTY ON ALL TREES AND ONE–YEAR WARRANTY ON ALL OTHER PLANT MATERIAL AND LABOR. WARRANTY PERIOD SHALL BEGIN UPON FINAL COMPLETION OR WHEN THE OWNER TAKES OVER MAINTENANCE, WHICHEVER OCCURS FIRST.

User: TTHOMAS Spec: AUS–NCSMOD File: I:\ACAD\PROJ\GABPA134 – CSO GROUP 1\BID PACKAGE 2\SHEETS\CIVIL\C–020.DWG Scale:1:1 SavedDate:7/23/2019 Time:16:06 Plot Date: Thomas, Travis; 7/30/2019; 08:51 ; Layout:25

COPYRIGHT: ARCADIS U.S., INC. 2016

IF THIS BAR IS NOT 1" INDICATED SCALE IS INCORRECT

NO.	DATE	ISSUED FOR	BY
0	JUL 2019	BIDDING	HG

SEALS

GEORGIA REGISTERED 07-31-2020 No. 033633 PROFESSIONAL ENGINEER ALEXARAL HAGEN II

ARCADIS BPA
A Joint Venture
2839 Paces Ferry Road
Suite 900
Atlanta, GA 30339
Tel: 770–431–8666
Fax: 770–435–2666
www.arcadis–us.com

ATLANTA, GEORGIA
CITY OF ATLANTA
DEPARTMENT OF WATERSHED MANAGEMENT

EAST AREA WATER QUALITY CONTROL FACILITY IMPROVEMENTS

W.01.02.0085

SHEET TITLE

LANDSCAPE PLAN – NOTES AND DETAILS

DATE:	JULY 2019
PROJECT NO.:	GABPA134
DESIGNED BY:	A. HAGEN
DRAWN BY:	D. LAMB
CHECKED BY:	A. SHARP

SCALE: NONE

C–020

SHEET 25 OF 150

DWG. ABBREV.	ITEM	SYMBOL
	GATE VALVE	
	KNIFE VALVE	
	PLUG VALVE	
	BUTTERFLY VALVE	
	BALL VALVE	
	BALL CHECK VALVE	
	3-WAY BALL VALVE	
	DIAPHRAGM VALVE	
	HOSE BIBB	
	PRESSURE REDUCING VALVE	
	BACK PRESSURE VALVE	
	GLOBE VALVE	
	3-WAY PLUG VALVE	
	ANGLE VALVE	
	CHECK VALVE	
	NEEDLE VALVE	
	RELIEF VALVE	
	PINCH VALVE	
	ROTAMETER	
	UNION	
	INSECT SCREEN	
	FLEXIBLE HOSE	
SG	SLUICE GATE	
SLG	FABRICATED SLIDE GATE	
	PULSATION DAMPENER	
	CALIBRATION STANDPIPE (COLUMN)	
W	WEIR	
	QUICK DISCONNECT COUPLING	
	STATIC MIXER	
	SPLIT SLEEVE COUPLING	
	DEMISTER	

DWG. ABBREV.	ITEM	SYMBOL
	TELESCOPING VALVE	
	FLAP VALVE	
	MUD VALVE	
WS	WATER SURFACE	
	ORIFICE PLATE	
	PIPE: 6" & SMALLER	
	PIPE: 8" & LARGER	
	FLANGE	
BF	BLIND FLANGE	
PO	PUSH ON JOINT	
	SLEEVE COUPLING	
	RESTRAINED SLEEVE COUPLING	
FE	FLOW RATE CONTROLLER	
FE	VENTURI FLOW METER	
FE	MAGNETIC FLOW METER	
	WELDED	
	EXISTING PIPE & FACILITIES PROPOSED PIPE & FACILITIES	
	EXISTING PIPE & FACILITIES TO BE REMOVED	
	EXISTING PIPE & FACILITIES TO BE ABANDONED	
	INSULATION (PIPE 8" & SMALLER) INSULATION (PIPE 10" & LARGER)	
GR	GROOVED COUPLING (PIPE 8" & SMALLER)	
GR	GROOVED COUPLING (PIPE 10" & LARGER)	
	FLEXIBLE CONNECTOR	
	FLEX. CONN. W/ CONTROL RODS	

DWG. ABBREV.	ITEM	SYMBOL
	WYE STRAINER	
G	GAUGE	
	DIRECTION OF FLOW	
	PITCH PIPE DOWN IN DIRECTION OF ARROW	
	CONCENTRIC REDUCER	
F.O.T.	ECCENTRIC REDUCER FLAT ON TOP	
F.O.B.	ECCENTRIC REDUCER FLAT ON BOTTOM	
A	ANCHOR	
	SPECTACLE FLANGE	
	LIMITS OF WORK (TRADE, CONTRACT, ETC.)	
	MATERIAL CHANGE	
	POINT OF CONNECTION NEW WORK TO EXISTING WORK	
	NEW CONCRETE	
	EXISTING CONCRETE	

ACTUATORS

	MOTOR OPERATED	M
	SOLENOID OPERATED	S
	DIAPHRAGM	D
	CYLINDER – HYDRAULIC	H
	CYLINDER – PNEUMATIC	P
	EQUIPMENT MOTOR	M

WALL CASTINGS

FLG x PO	FLANGE AND PUSH ON JOINT	WATERSTOP
PO x PO	PUSH ON JOINT AND PUSH ON JOINT	
PO x PE	PUSH ON JOINT AND PLAIN END	
FLG x FLG	FLANGE AND FLANGE	
FLG x PE	FLANGE AND PLAIN END	

EQUIPMENT NUMBERING CONVENTION

P3011 EQUIPMENT NUMBER TAG

GENERAL NOTES

1 THE CONTRACTOR SHALL MAKE ALL REQUIRED FIELD MEASUREMENTS TO VERIFY EXISTING AND CONTRACT INTERFACE DIMENSIONS, LOCATIONS, AND OTHER CONDITIONS.

2. WHEN MAKING NEW CONNECTIONS TO EXISTING PIPING, THE CONTRACTOR MAY, AT HIS OPTION:

   A. REPLACE PIPING BACK TO NEAREST FITTING.
   B. USE SLEEVE COUPLING OR FLANGE ADAPTERS (RESTRAINED ON PRESSURE LINES).

3. REFER TO STRUCTURAL DRAWINGS FOR COVER PLATES, HATCHES, GRATING AND RAILING DETAILS.

4 ALL PIPING UNDER CONCRETE SLABS OR STRUCTURES SHALL BE ENCASED IN CONCRETE, UNLESS OTHERWISE NOTED, REFER TO STRUCTURAL DRAWINGS.

5. ALL PIPING ENCASED IN CONCRETE SHALL HAVE PUSH-ON JOINTS AT ALL STRUCTURAL EXPANSION JOINTS.

6. PROVIDE EXPANSION JOINTS WITH CONTROL RODS FOR ALL EXPOSED PIPING CROSSING STRUCTURAL EXPANSION JOINTS.

7. ALL DIMENSIONS LOCATING EQUIPMENT ARE FROM FINISHED WALL SURFACES OR COLUMN CENTERLINES.

8. WALL AND FLOOR SLEEVES SHALL BE LARGE ENOUGH TO ACCOMMODATE FLANGES IF REQUIRED. FLOOR SLEEVES SHALL PROJECT AT LEAST 4-IN. ABOVE FINISHED FLOOR UNLESS OTHERWISE SHOWN, REFER SLEEVE TO DETAILS.

9. PROVIDE WALL FITTINGS WITH WATERSTOP FOR ALL BURIED AND SUBMERGED PIPELINES AND FOR PIPING LOCATED WITHIN 2 FT. OF MAXIMUM WATER SURFACE. WALL FITTINGS 4-IN AND LARGER – DUCTILE IRON, 3-IN AND SMALLER – 316L STAINLESS STEEL.

10. ALL PIPE PENETRATIONS THROUGH INTERIOR AND EXTERIOR WALLS AND FLOORS SHALL BE SEALED WATERTIGHT. ROOF PENETRATIONS SHALL BE SEALED IN ACCORDANCE WITH DETAILS.

11. ALL FLEXIBLE CONNECTORS, INCLUDING EXPANSION JOINTS AND SLEEVE COUPLINGS SUBJECT TO PRESSURE SHALL BE RESTRAINED AS INDICATED OR AS REQUIRED FOR EXPANSION AND FOR FLEXIBILITY.

12. PROVIDE ALL LIQUID PIPING WITH 3/4 " LOW POINT DRAINS AND 3/4 " HIGH POINT VENTS. DRAINS AND VENTS TO INCLUDE BALL VALVE AND CAP.

13. PROVIDE 2" BALL VALVE WITH 1-1/4" HOSE CONN. ADAPTER AT HORIZONTAL CENTERLINE OF PIPE FOR SAMPLE CONNECTIONS WHERE SHOWN.

14. SMALL PIPING (SAMPLE, SERVICE WATER, ETC.) IS SHOWN DIAGRAMATICALLY: FIELD ROUTE SUBJECT TO APPROVAL OF THE ENGINEER. SMALL PIPE ROUTING MUST NOT INTERFERE WITH ACCESS TO OR OPERATION OF ANY OTHER PIPE, VALVE, OR EQUIPMENT.

15. PROVIDE WALL MOUNTED SIGNS, IN ACCORDANCE WITH SPECIFICATIONS REQUIREMENTS FOR ALL EXTERIOR WALL PENETRATIONS, INDICATING PIPE ORIGIN OR DESTINATION AND PIPE LABEL.

16 FOR PUMP SEAL WATER, VENT, DRAIN, PRESSURE GAUGE, VALVING AND PIPING SEE DETAILS.

17. ALL COMPONENTS SHOWN IN DARKER LINEWEIGHT ARE NEW OR TO BE REPLACED.

18. THIS IS A STANDARD SYMBOL SHEET. NOT ALL ITEMS SHOWN ARE USED ON THIS PROJECT.

19. STANDARD DETAILS ARE INTENDED TO BE TYPICAL AND SHALL APPLY TO ALL SUMILAR SITUATIONS OCCURING ON THIS PROJET UNLESS OTHERWISE NOTED.

CHEMICAL NOTES

1. EXCEPT WHERE SPECIFICALLY SHOWN ON THE DRAWINGS ALL PIPE ELEVATIONS ARE TO BE DETERMINED BY THE CONTRACTOR AND APPROVED BY THE ENGINEER.

2. EXCEPT WHERE SPECIFICALLY SHOWN ON THE DRAWINGS, PIPE ROUTING IS TO BE DETERMINED BY THE CONTRACTOR SUBJECT TO APPROVAL BY THE ENGINEER. SMALL PIPE ROUTING MUST NOT INTERFERE WITH ACCESS TO OR OPERATION OF ANY OTHER PIPE, VALVE, OR EQUIPMENT.

3. PIPE UNIONS SHALL BE PROVIDED AT ALL PIPING CONNECTIONS TO AND FROM EQUIPMENT AND AS SHOWN ON SYSTEM SCHEMATICS.

4. LOCATE BACK PRESSURE VALVES, VENT VALVES, AND ASSOCIATED ITEMS NO HIGHER THAN 6 FT ABOVE THE OPERATING LEVEL. ALL EXCEPTIONS SHALL BE APPROVED BY THE ENGINEER.

5. HORIZONTAL RUNS OF CPVC, PVC AND ALL OTHER PLASTIC PIPE OR TUBING SHALL BE SUPPORTED ON FIBERGLASS OR TYPE 316SS ANGLE OR UNISTRUT WITH A MAXIMUM HANGER SPACING OF 5 FT. SUPPORT VERTICLE RUNS WITH CLAMPS AT A MAXIMUM SPACING OF 3 FT. ON CENTER, SEE SPECIFICATIONS.

6. ALL EQUIPMENT REQUIRING VENTING TO ATMOSPHERE SHALL HAVE VENTS LOCATED AWAY FROM ANY BUILDING OPENINGS.

7. PROVIDE HOSE ON ALL DRAINS FOR METERING PUMP DISCHARGE LINES OF THE SAME SIZE AS INDICATED ON DRAWINGS AND TERMINATED 12" ABOVE FINISHED FLOOR.

COPYRIGHT:
ARCADIS U.S., INC.
2016

IF THIS BAR IS NOT 1" INDICATED SCALE IS INCORRECT

NO.	DATE	ISSUED FOR	BY
0	JUL 2019	BIDDING	HG

SEALS

GEORGIA REGISTERED G. PE0015636 PROFESSIONAL ENGINEER HAMILTON A. GILES 07/31/19

ARCADIS
BPA
A Joint Venture
2839 Paces Ferry Road
Suite 900
Atlanta, GA 30339
Tel: 770-431-8666
Fax: 770-435-2666
www.arcadis-us.com

RESURGENS ATLANTA, GA 1790 2001

ATLANTA, GEORGIA
CITY OF ATLANTA
DEPARTMENT OF WATERSHED MANAGEMENT

EAST AREA WATER QUALITY CONTROL FACILITY IMPROVEMENTS

W.01.02.0085

SHEET TITLE

MECHANICAL LEGEND AND NOTES

DATE:	JULY 2019
PROJECT NO.:	GABPA134
DESIGNED BY:	M. BRONSTEIN
DRAWN BY:	J. BROWN
CHECKED BY:	A. SHARP

SCALE: NONE

M-001

SHEET 26 OF 150

User:THOMAS Spec:AUS-NCSMOD File:I:\ACAD\PROJ\GABPA134 - CSO GROUP 1\BID PACKAGE 2\SHEETS\MECHANICAL\M-001.DWG Scale:1:1 SavedDate:8/3/2018 Time:17:50 Plot Date: Thomas, Travis; 7/31/2019; 08:02 ; Layout:26

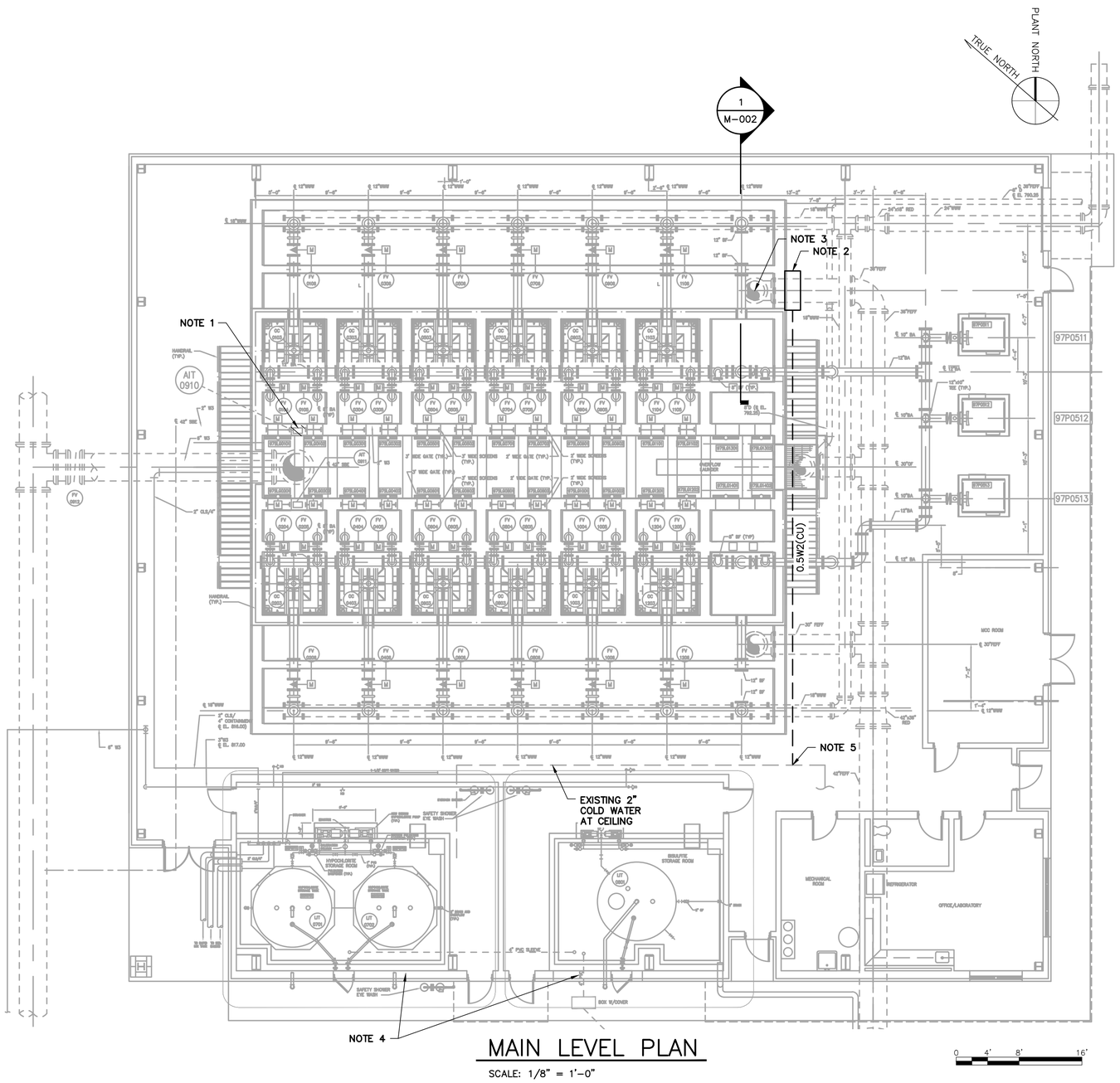

MAIN LEVEL PLAN

SCALE: 1/8" = 1'-0"

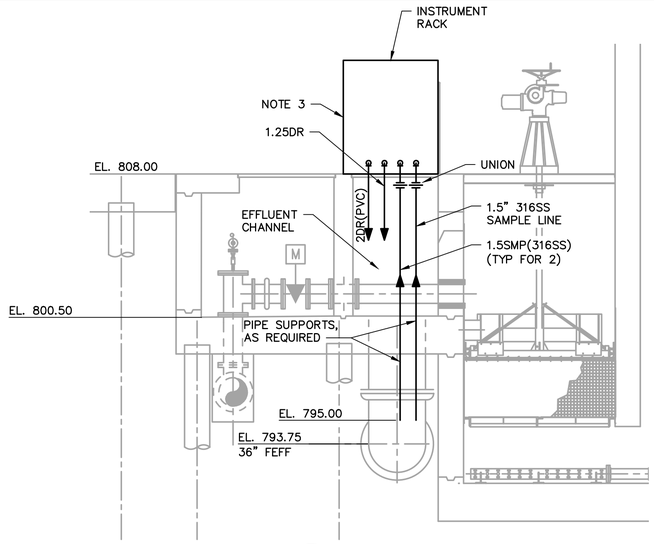

1 M-002 SECTION

SCALE: N.T.S.

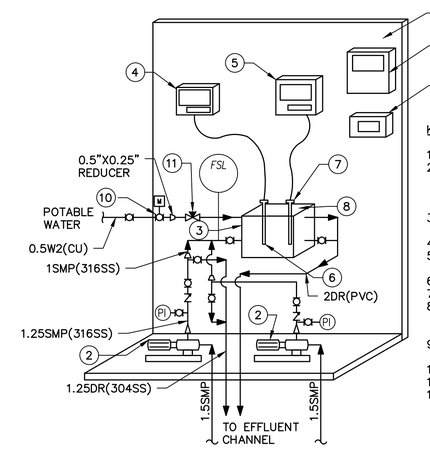

KEYNOTES:

1. SS INSTRUMENT RACK/SKID
2. SELF-PRIMING CENTRIFUGAL PUMP, STAINLESS STEEL CONSTRUCTION (1HP MAX., 5 GPM, TDH 20 FT, PRIMING LIFT OF 14')
3. POLYPROPYLENE TANK (14"Lx10"Wx12H"), DISCHARGE AT EL. 9".
4. TOTAL CHLORINE TRANSMITTER.
5. DISSOLVED OXYGEN AND pH TRANSMITTER.
6. TOTAL CHLORINE PROBE.
7. pH PROBE.
8. TANK SLIDING COVER W/ NOTCHES FOR PROBES. CONTRACTOR TO SUBMIT DRAWING PRIOR TO FABRICATION.
9. SAMPLING STATION CONTROL PANEL. SEE PANEL DETAIL ON I-023.
10. MOTORIZED BALL VALVE.
11. NEEDLE VALVE.
12. UPS PANEL.

A M-002 SAMPLING POINT NO. 2

SCALE: N.T.S.

NOTES:

1. REMOVE EXISTING CHLORINE ANALYZER UNIT AT INFLUENT END OF CHANNEL.
2. INSTALL NEW INSTRUMENT RACK AS SHOWN ON DETAIL A. TWO (2) SELF-PRIMING CENTRIFUGAL PUMPS (DUTY/STANDBY) TO BE INSTALLED ON THE RACK.
3. PRIOR TO FABRICATION CONTRACTOR TO SUBMIT AN INSTRUMENT RACK LAYOUT FOR ENGINEER'S APPROVAL.
4. SEE SHEET M-019 & M-021 FOR SODIUM HYPOCHLORITE & SODIUM BISULFITE CHEMICAL SYSTEM MODIFICATIONS.
5. TIE IN TO EXISTING 2" COLD WATER PIPE AT CEILING. PROVIDE 1/2" ISOLATION VALVE.

REFERENCE DRAWINGS: M-31, M-32, M-33 (2008, CITY OF ATLANTA INTRENCHMENT CREEK CSO TREATMENT PLANT

COPYRIGHT: ARCADIS U.S., INC. 2016

IF THIS BAR IS NOT 1" INDICATED SCALE IS INCORRECT

NO.	DATE	ISSUED FOR	BY
0	JUL 2019	BIDDING	HG

SEALS

GEORGIA REGISTERED PROFESSIONAL ENGINEER HAMILTON DAY GILES

ARCADIS BPA A Joint Venture
2839 Paces Ferry Road
Suite 900
Atlanta, GA 30339
Tel: 770-431-8666
Fax: 770-435-2666
www.arcadis-us.com

ATLANTA, GEORGIA
CITY OF ATLANTA
DEPARTMENT OF WATERSHED MANAGEMENT

EAST AREA WATER QUALITY CONTROL FACILITY IMPROVEMENTS

W.01.02.0085

SHEET TITLE

FILTER BUILDING MODIFICATION PLAN AND CODED NOTES

DATE:	JULY 2019
PROJECT NO.:	GABPA134
DESIGNED BY:	M. BRONSTEIN
DRAWN BY:	J. BROWN
CHECKED BY:	A. SHARP

SCALE: AS SHOWN

M-002

SHEET 27 OF 150

User: TTHOMAS Spec: AUS-NCSMOD File: I:\ACAD\PROJ\GABPA134 - CSO GROUP 1\BID PACKAGE 2\SHEETS\MECHANICAL\M-002.DWG Scale: 1:1 SavedDate: 2/28/2019 Time: 13:36 Plot Date: Thomas, Travis; 7/31/2019; 08:04 ; Layout: 27

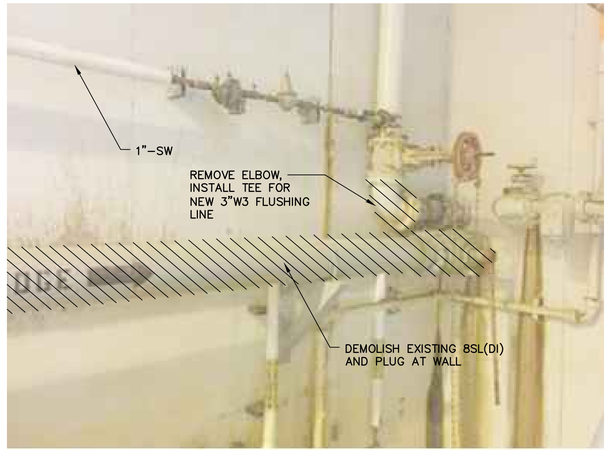

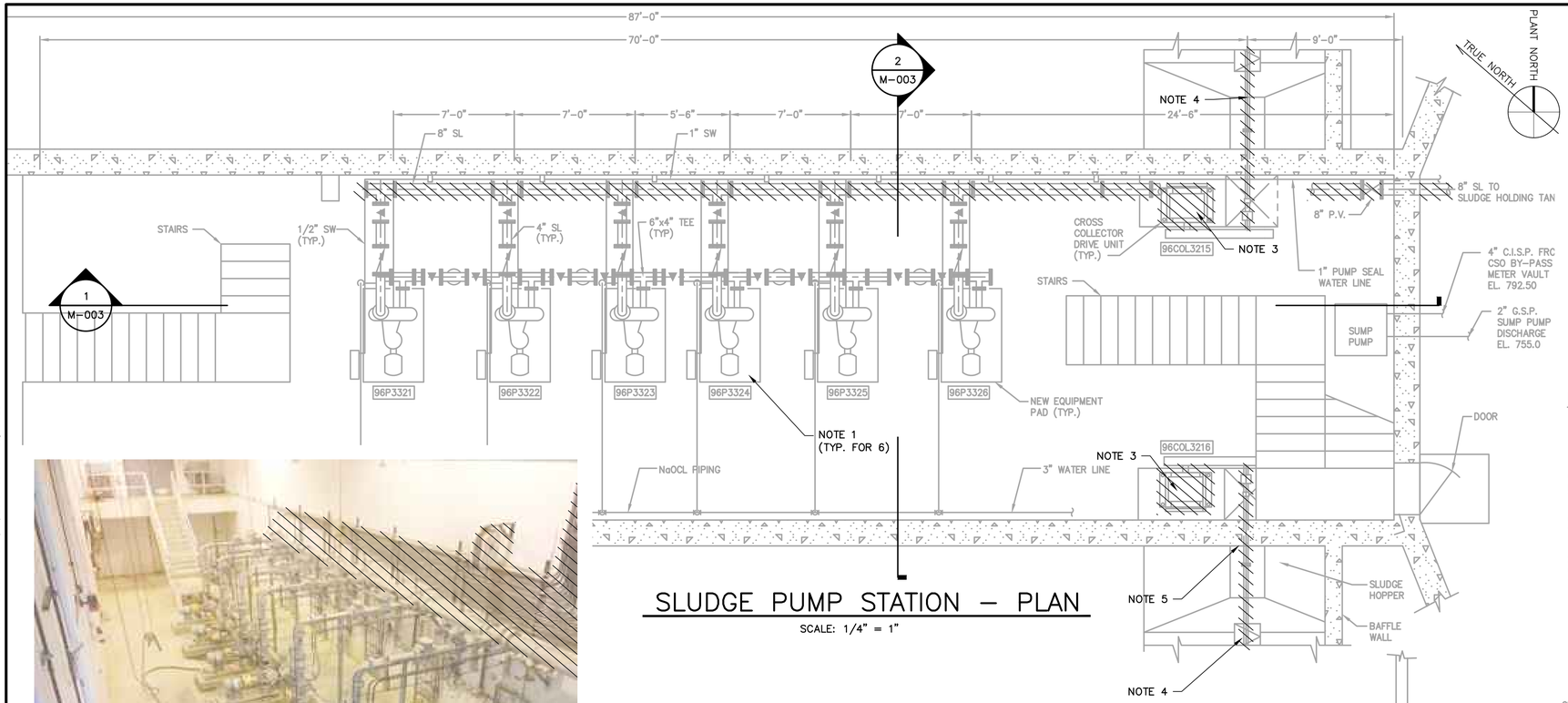

SLUDGE PUMP STATION – PLAN

SCALE: 1/4" = 1"

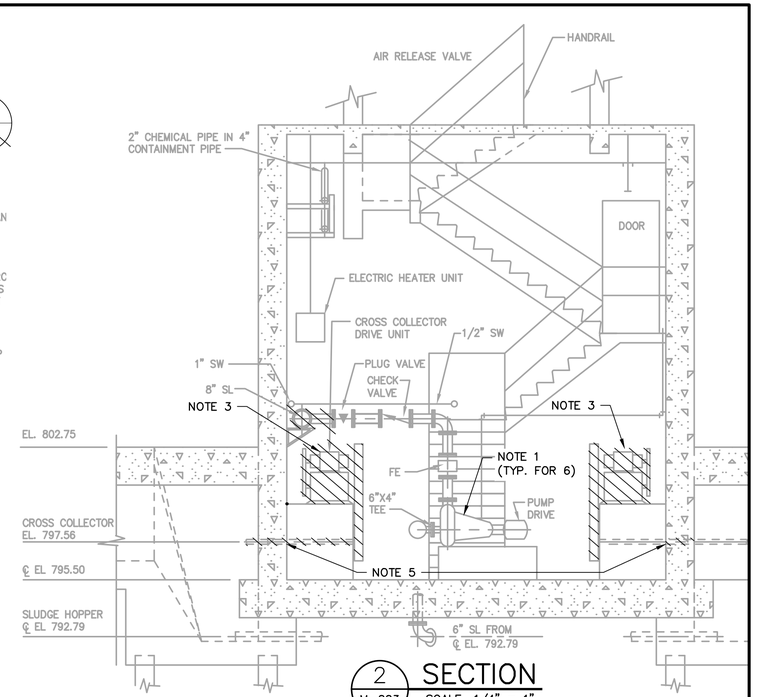

2 SECTION

M-003 SCALE: 1/4" = 1"

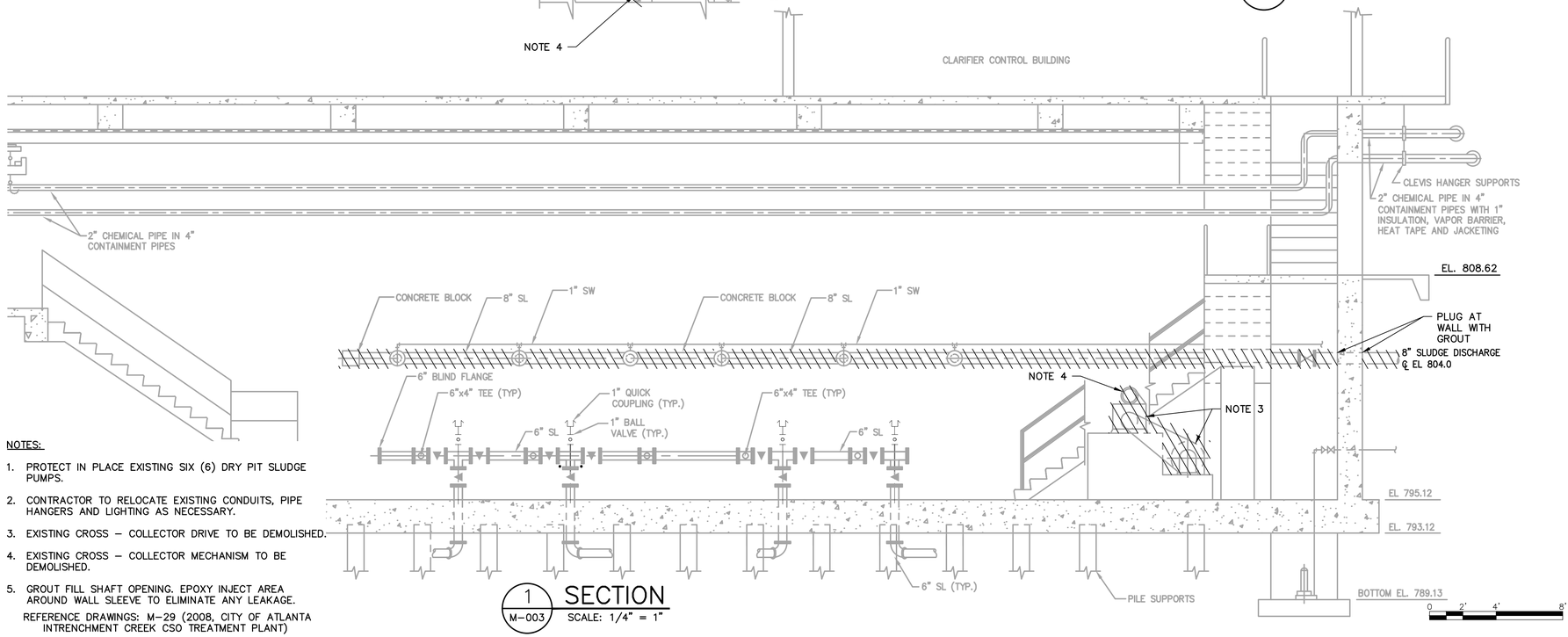

1 SECTION

M-003 SCALE: 1/4" = 1"

NOTES:

1. PROTECT IN PLACE EXISTING SIX (6) DRY PIT SLUDGE PUMPS.
2. CONTRACTOR TO RELOCATE EXISTING CONDUITS, PIPE HANGERS AND LIGHTING AS NECESSARY.
3. EXISTING CROSS – COLLECTOR DRIVE TO BE DEMOLISHED.
4. EXISTING CROSS – COLLECTOR MECHANISM TO BE DEMOLISHED.
5. GROUT FILL SHAFT OPENING. EPOXY INJECT AREA AROUND WALL SLEEVE TO ELIMINATE ANY LEAKAGE.

REFERENCE DRAWINGS: M-29 (2008, CITY OF ATLANTA INTRENCHMENT CREEK CSO TREATMENT PLANT)

COPYRIGHT: ARCADIS U.S., INC. 2016

IF THIS BAR IS NOT 1" INDICATED SCALE IS INCORRECT

NO.	DATE	ISSUED FOR	BY
0	JUL 2019	BIDDING	HG

SEALS

GEORGIA REGISTERED G. PEVITS® PROFESSIONAL ENGINEER HAMILTON DAY GILES 07/31/19

ARCADIS BPA
A Joint Venture
2839 Paces Ferry Road
Suite 900
Atlanta, GA 30339
Tel: 770-431-8666
Fax: 770-435-2666
www.arcadis-us.com

RESURGENS ATLANTA, GA. 2001

ATLANTA, GEORGIA
CITY OF ATLANTA
DEPARTMENT OF WATERSHED MANAGEMENT

EAST AREA WATER QUALITY CONTROL FACILITY IMPROVEMENTS

W.01.02.0085

SHEET TITLE

SLUDGE PUMP STATION DEMOLITION PLAN AND SECTIONS

DATE:	JULY 2019
PROJECT NO.:	GABPA134
DESIGNED BY:	M. BRONSTEIN
DRAWN BY:	J. BROWN
CHECKED BY:	A. SHARP

SCALE: 1/4"=1'

M-003

SHEET 28 OF 150

User: THOMAS Spec: AUS-NCSM0D File: I:\ACAD\PROJ\GABPA134 - CSO GROUP 1\BID PACKAGE 2\SHEETS\MECHANICAL\M-003.DWG Scale:1:1 SavedDate:5/31/2019 Time:07:44 Plot Date: Thomas, Travis; 7/31/2019; 08:06 ; Layout:28

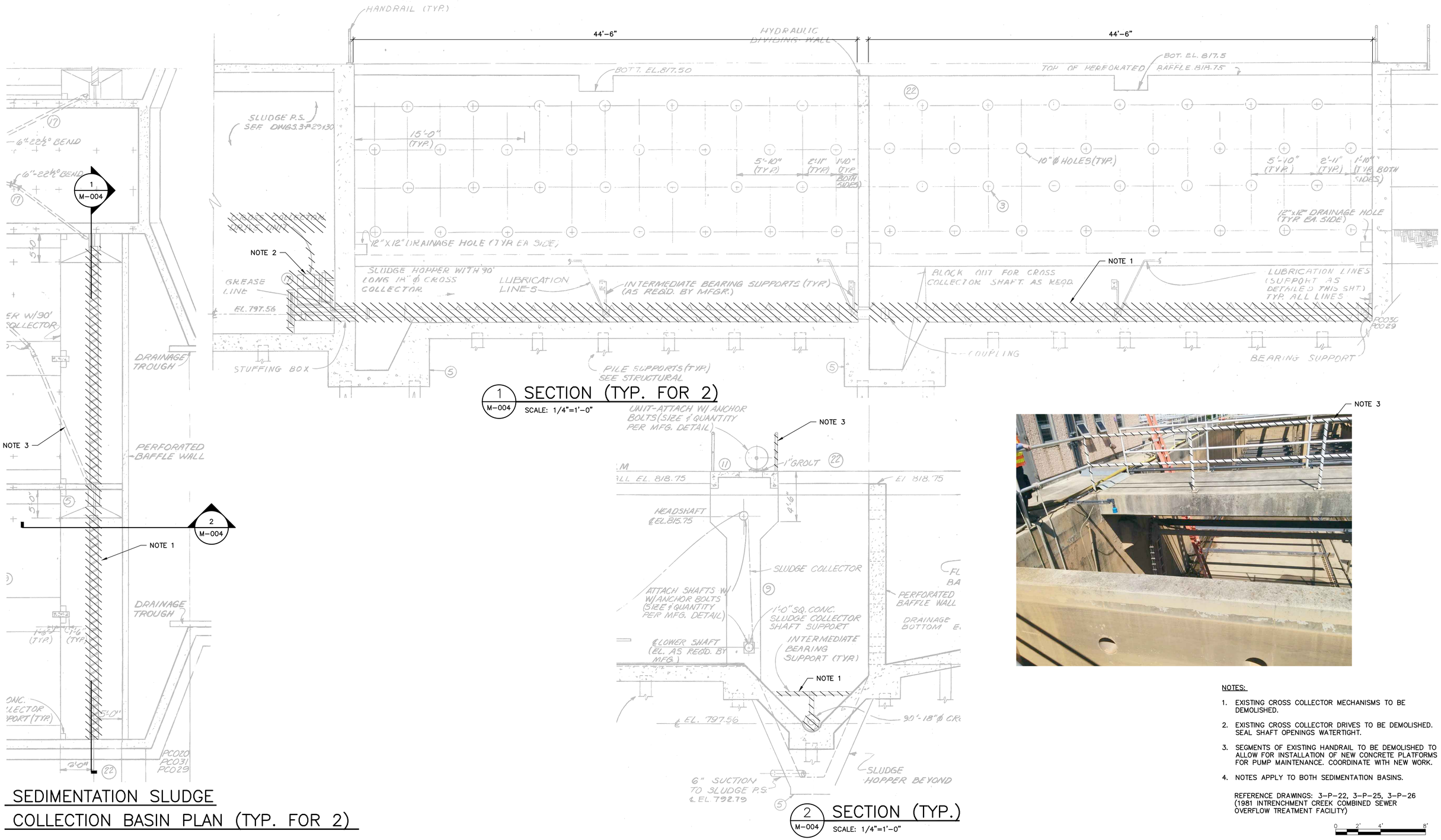

1 M-004 SECTION (TYP. FOR 2)

SCALE: 1/4"=1'-0"

2 M-004 SECTION (TYP.)

SCALE: 1/4"=1'-0"

SEDIMENTATION SLUDGE COLLECTION BASIN PLAN (TYP. FOR 2)

NOTES:

1. EXISTING CROSS COLLECTOR MECHANISMS TO BE DEMOLISHED.
2. EXISTING CROSS COLLECTOR DRIVES TO BE DEMOLISHED. SEAL SHAFT OPENINGS WATERTIGHT.
3. SEGMENTS OF EXISTING HANDRAIL TO BE DEMOLISHED TO ALLOW FOR INSTALLATION OF NEW CONCRETE PLATFORMS FOR PUMP MAINTENANCE. COORDINATE WITH NEW WORK.
4. NOTES APPLY TO BOTH SEDIMENTATION BASINS.

REFERENCE DRAWINGS: 3-P-22, 3-P-25, 3-P-26 (1981 INTRENCHMENT CREEK COMBINED SEWER OVERFLOW TREATMENT FACILITY)

0 2' 4' 8'

COPYRIGHT: ARCADIS U.S., INC. 2016

IF THIS BAR IS NOT 1" INDICATED SCALE IS INCORRECT

NO.	DATE	ISSUED FOR	BY
0	JUL 2019	BIDDING	HG

SEALS

GEORGIA REGISTERED P.E. PE017536 PROFESSIONAL ENGINEER HAMILTON DAY GILES

ARCADIS BPA A Joint Venture
2839 Paces Ferry Road
Suite 900
Atlanta, GA 30339
Tel: 770-431-8666
Fax: 770-435-2666
www.arcadis-us.com

ATLANTA, GEORGIA
CITY OF ATLANTA
DEPARTMENT OF WATERSHED MANAGEMENT

EAST AREA WATER QUALITY CONTROL FACILITY IMPROVEMENTS

W.01.02.0085

SHEET TITLE

SEDIMENTATION BASIN DEMOLITION PLAN AND SECTIONS

DATE:	JULY 2019
PROJECT NO.:	GABPA134
DESIGNED BY:	M. BRONSTEIN
DRAWN BY:	J. BROWN
CHECKED BY:	A. SHARP

SCALE: 1/4"=1'-0"

M-004

SHEET 29 OF 150

User: TTHOMAS Spec: AUS-NCSMOD File: I:\ACAD\PROJ\GABPA134 - CSO GROUP 1\BID PACKAGE 2\SHEETS\MECHANICAL\M-004.DWG Scale: 1:1 SavedDate: 2/28/2019 Time: 12:04 Plot Date: Thomas, Travis; 7/31/2019; 08:08 ; Layout: 29

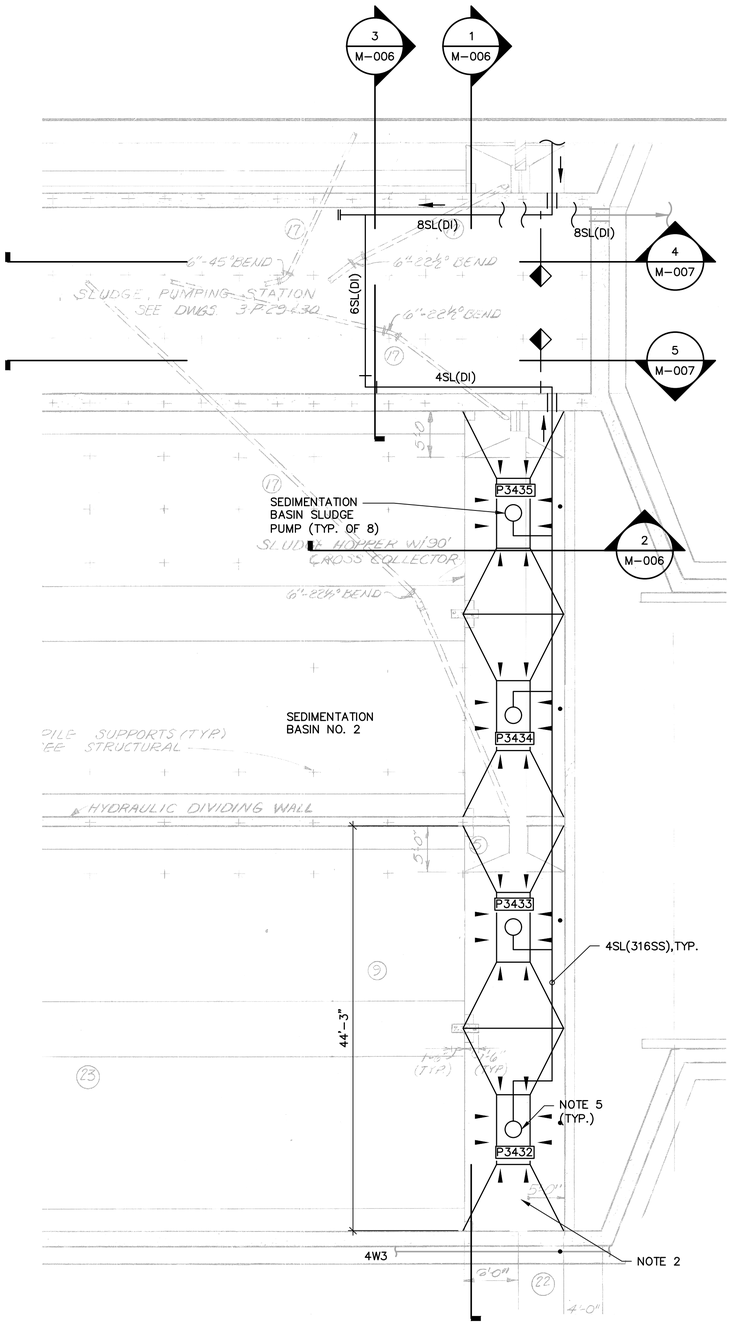

SEDIMENTATION SLUDGE COLLECTION SUMPS BOTTOM PLAN (TYP. FOR 2)

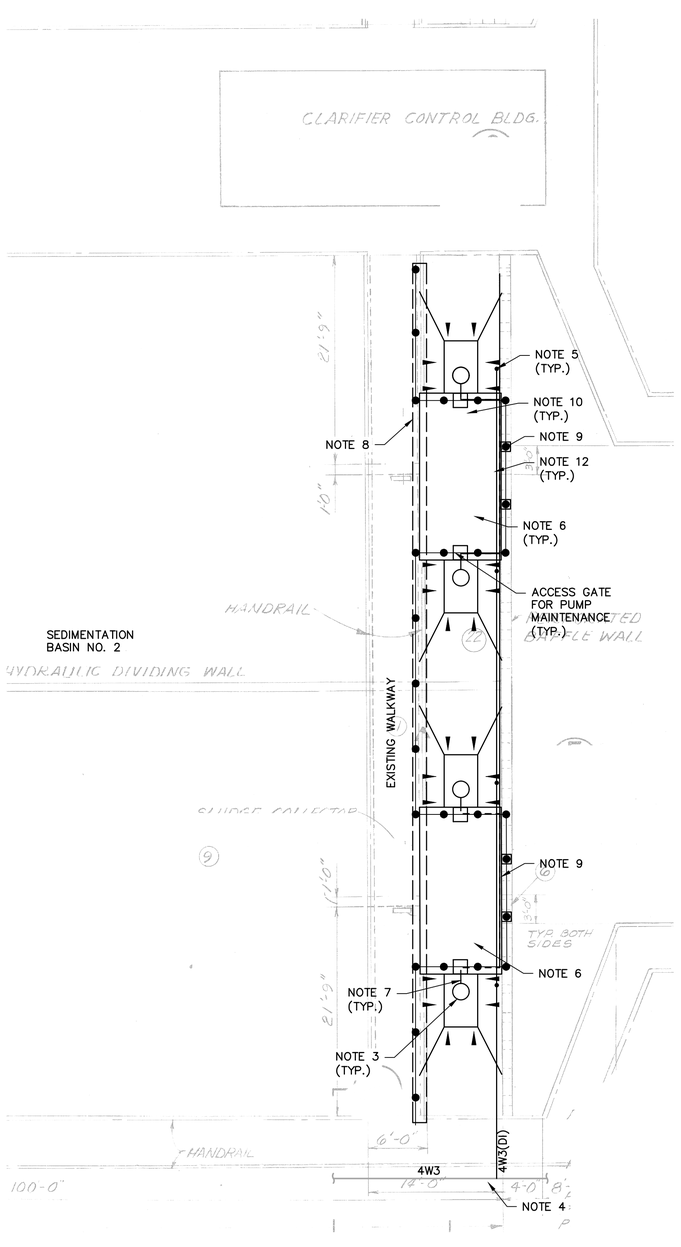

SEDIMENTATION SLUDGE COLLECTION SUMPS TOP PLAN (TYP. FOR 2)

NOTES (APPLY TO BOTH BASINS):

1. CONTRACTOR TO FIELD VERIFY ALL ELEVATIONS AND DIMENSIONS.
2. NEW GROUT, SEE S-008.
3. INSTALL EIGHT (8) NEW SUBMERSIBLE RECESSED IMPELLER PUMPS [FOUR (4) IN EACH BASIN].
4. CONNECT TO EXISTING 4" W3 TO FEED FLUIDIZING WATER TO SLUDGE PUMPS. FOR SEDIMENTATION BASIN 1, USE PLANT WATER FROM EXISTING 4" W3 RUNNING ALONG NORTH OF BASIN.
5. INSTALL NEW 1.25" FLUIDIZING WATER LINE, TYPE 316SS, FOR EACH PUMP. SEE DETAIL A ON SHEET M-007.
6. INSTALL NEW CONCRETE PLATFORMS FOR PUMP MAINTENANCE. SEE STRUCTURAL DRAWING FOR DETAILS.
7. INSTALL NEW STAINLESS STEEL GUIDE RAILS PER MANUFACTURER RECOMMENDATIONS.
8. REMOVE EXISTING HANDRAIL AT NEW PLATFORMS.
9. INSTALL NEW HANDRAIL FOR PLATFORMS WITH ACCESS GATES FOR PUMP MAINTENANCE.
10. INSTALL PEDESTAL BASES FOR PORTABLE DAVIT CRANES.
11. ALL EXPOSED PIPING SHALL BE HEAT TRACED AND INSULATED.
12. INSTALL ENCLOSURES FOR FLUIDIZING WATER ROTAMETERS. SEE INSTRUMENTATION DRAWING FOR DETAILS.

REFERENCE DRAWINGS: 3-P-22 AND 3-P-23 (1981 INTRENCHMENT CREEK COMBINED SEWER OVERFLOW TREATMENT FACILITY)

0 4' 8' 16'

COPYRIGHT:
ARCADIS U.S., INC.
2016

IF THIS BAR IS NOT 1" INDICATED SCALE IS INCORRECT

NO.	DATE	ISSUED FOR	BY
0	JUL 2019	BIDDING	HG

SEALS

GEORGIA REGISTERED U.S. PEVISR PROFESSIONAL ENGINEER HAMILTON DAY GILES 07/31/19

ARCADIS
BPA
A Joint Venture
2839 Paces Ferry Road
Suite 900
Atlanta, GA 30339
Tel: 770-431-8666
Fax: 770-435-2666
www.arcadis-us.com

RESURGENS PLAZA ATLANTA, GA. 30303

ATLANTA, GEORGIA
CITY OF ATLANTA
DEPARTMENT OF WATERSHED MANAGEMENT

EAST AREA WATER QUALITY CONTROL FACILITY IMPROVEMENTS

W.01.02.0085

SHEET TITLE

SEDIMENTATION BASIN AND SLUDGE PUMPING PLAN

DATE:	JULY 2019
PROJECT NO.:	GABPA134
DESIGNED BY:	M. BRONSTEIN
DRAWN BY:	J. BROWN
CHECKED BY:	A. SHARP

SCALE: 1/8"=1'

M-005

SHEET 30 OF 150

User:TTHOMAS Spec:AUS-NCSM0D File:I:\ACAD\PROJ\GABPA134 - CSO GROUP 1\BID PACKAGE 2\SHEETS\MECHANICAL\M-005.DWG Scale:1:1 SavedDate:2/25/2019 Time:18:30 Plot Date: Thomas, Travis; 7/31/2019; 08:10 ; Layout:30

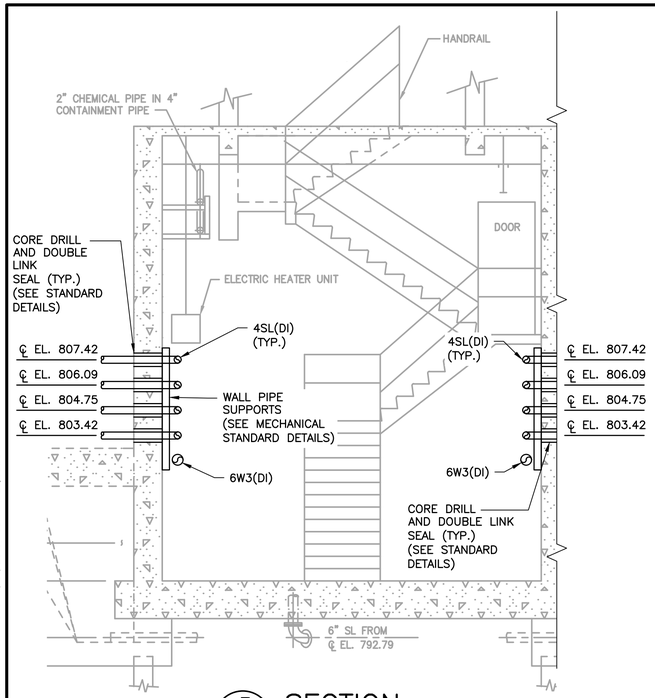

3 M-005 **SECTION**
SCALE: 1/4"=1'-0"

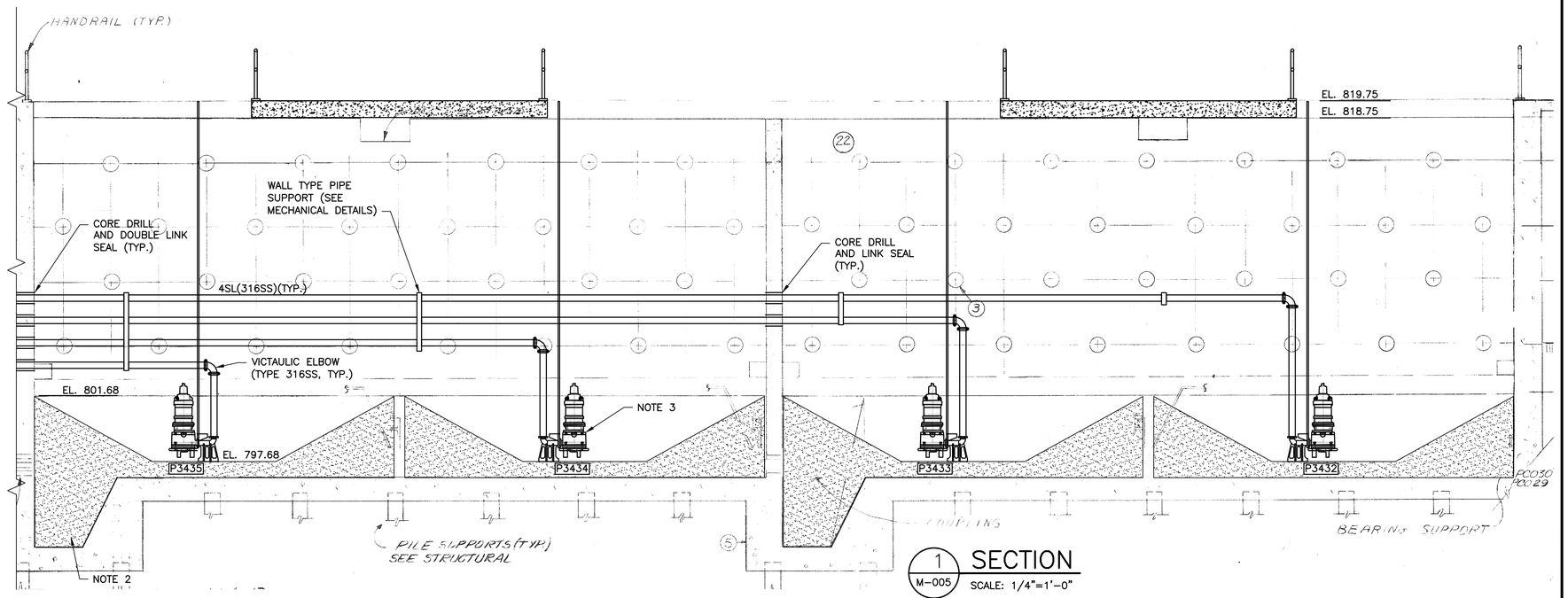

1 M-005 **SECTION**
SCALE: 1/4"=1'-0"

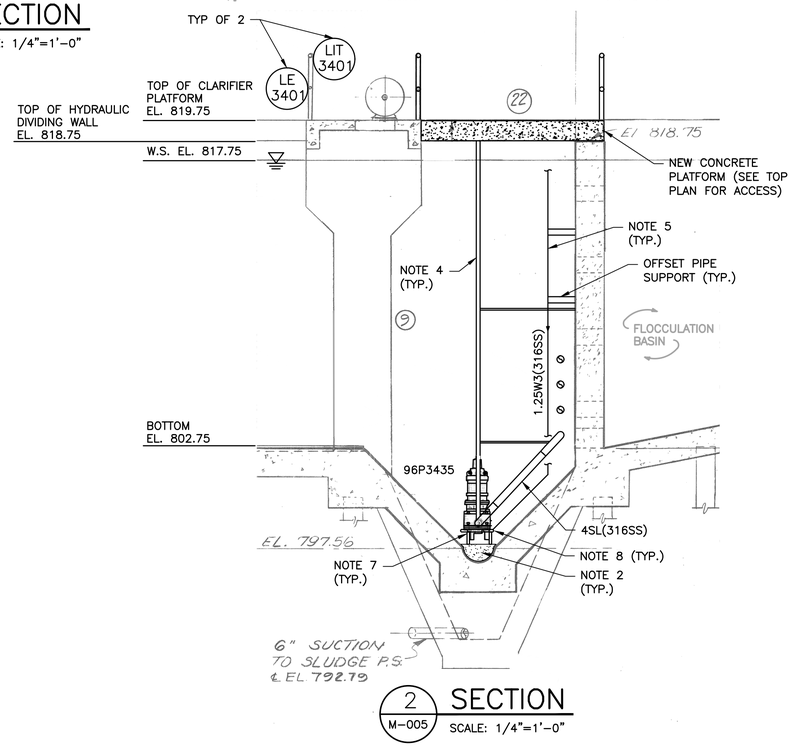

2 M-005 **SECTION**
SCALE: 1/4"=1'-0"

NOTES:

1. CONTRACTOR TO FIELD VERIFY ALL ELEVATIONS AND DIMENSIONS.
2. PLACE NEW GROUT FILL TO RESHAPE EACH SUMP AS SHOWN.
3. INSTALL EIGHT (8) NEW SUBMERSIBLE RECESSED IMPELLER PUMPS [FOUR (4) IN EACH BASIN].
4. INSTALL NEW 316 STAINLESS STEEL GUIDERAILS AND SUPPORT BRACKETS PER MANUFACTURER RECOMMENDATIONS.
5. INSTALL NEW FLUIDIZING WATER LINE IN EACH SLUDGE SUMP.
6. EXPOSED PIPE IN UNCONDITIONED AREAS SHALL BE HEAT TRACED AND INSULATED.
7. MOUNT 1.25" STAINLESS STEEL SPARGER RING TO THE FLOOR OF SUMP.
8. 1.25W3 CONNECTS AT SPARGER RING (FLANGED CONNECTION).

REFERENCE DRAWINGS: 3-P-25, 3-P-26 (1981 INTRENCHMENT CREEK COMBINED SEWER OVERFLOW TREATMENT FACILITY), M-29 (2008, CITY OF ATLANTA INTRENCHMENT CREEK CSO TREATMENT PLANT)

0 2' 4' 8'

COPYRIGHT: ARCADIS U.S., INC. 2016

IF THIS BAR IS NOT 1" INDICATED SCALE IS INCORRECT

NO.	DATE	ISSUED FOR	BY
0	JUL 2019	BIDDING	HG

SEALS

GEORGIA REGISTERED P.E. PE015636 PROFESSIONAL ENGINEER HAMILTON A. GILES 07/31/19

ARCADIS A Joint Venture
BPA
2839 Paces Ferry Road
Suite 900
Atlanta, GA 30339
Tel: 770-431-8666
Fax: 770-435-2666
www.arcadis-us.com

ATLANTA, GEORGIA
CITY OF ATLANTA
DEPARTMENT OF WATERSHED MANAGEMENT

EAST AREA WATER QUALITY CONTROL FACILITY IMPROVEMENTS

W.01.02.0085

SHEET TITLE

SEDIMENTATION BASIN AND SLUDGE PUMPING SECTIONS AND DETAILS 1

DATE:	JULY 2019
PROJECT NO.:	GABPA134
DESIGNED BY:	M. BRONSTEIN
DRAWN BY:	J. BROWN
CHECKED BY:	A. SHARP

SCALE: 1/4" = 1'

M-006

SHEET 31 OF 150

User:THOMAS Spec:AUS-NCSMOD File:I:\ACAD\PROJ\GABPA134 - CSO GROUP 1\BID PACKAGE 2\SHEETS\MECHANICAL\M-006.DWG Scale:1:1 SavedDate:7/29/2019 Time:08:41 Plot Date: Thomas, Travis; 7/31/2019; 08:11 ; Layout:31

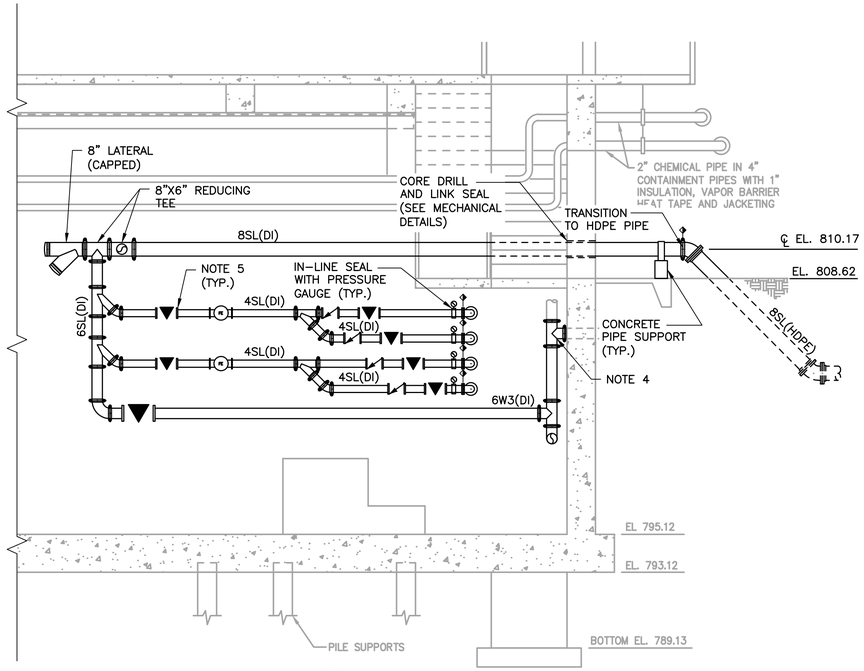

4 M-005 SECTION
SCALE: 1/4"=1'-0"

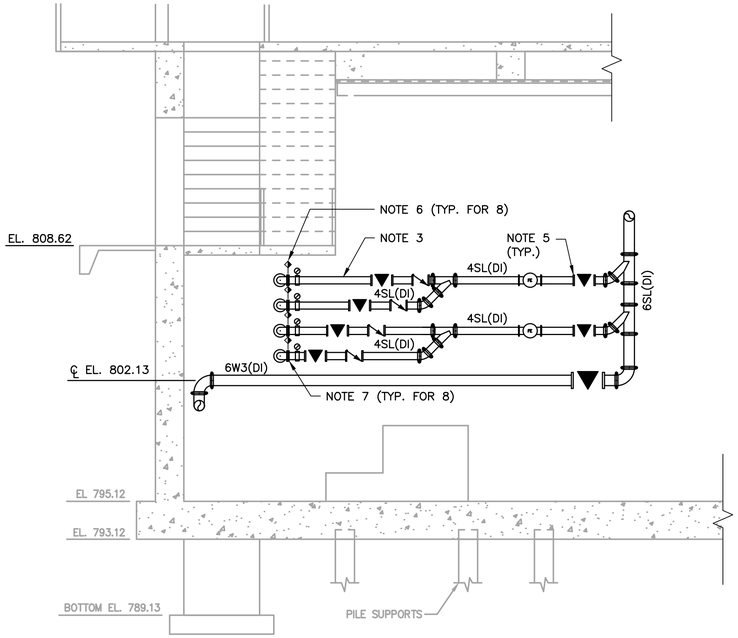

5 M-005 SECTION
SCALE: 1/4"=1'-0"

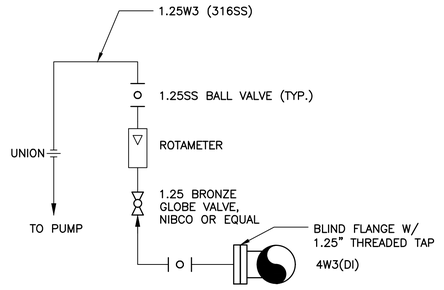

A M-005 FLUIDIZING WATER CONNECTION
SCALE: N.T.S.

NOTES:

1. CONTRACTOR TO FIELD VERIFY ALL ELEVATIONS AND DIMENSIONS.
2. EXPOSED PIPE IN UNCONDITIONED AREAS SHALL BE HEAT TRACED AND INSULATED.
3. ALL DUCTILE IRON SLUDGE PIPING IN SLUDGE PUMP STATION TO BE GROOVED-JOINT, UNLESS OTHERWISE NOTED.
4. TIE-IN TO EXISTING WATER PIPE.
5. ALL NEW VALVES INSTALLED AT ELEVATION HIGHER THAN 6FT SHALL BE PROVIDED WITH CHAIN WHEEL ACTUATORS.
6. MATERIAL CHANGE FROM 316SS TO DI.
7. JOINTS AT 316SS TO DI SHALL BE FLANGED.

REFERENCE DRAWINGS: M-28, M-29 (2008, CITY OF ATLANTA INTRENCHMENT CREEK CSO TREATMENT PLANT)

0 2' 4' 8'

COPYRIGHT: ARCADIS U.S., INC. 2016

IF THIS BAR IS NOT 1" INDICATED SCALE IS INCORRECT

NO.	DATE	ISSUED FOR	BY
0	JUL 2019	BIDDING	HG

SEALS

GEORGIA REGISTERED PROFESSIONAL ENGINEER HAMILTON DAY GILES
07/31/19

ARCADIS BPA
A Joint Venture

2839 Paces Ferry Road
Suite 900
Atlanta, GA 30339
Tel: 770-431-8666
Fax: 770-435-2666
www.arcadis-us.com

RESURGENS 1847 ATLANTA, GA. 1865

ATLANTA, GEORGIA
CITY OF ATLANTA
DEPARTMENT OF WATERSHED MANAGEMENT

EAST AREA WATER QUALITY CONTROL FACILITY IMPROVEMENTS

W.01.02.0085

SHEET TITLE

SEDIMENTATION BASIN AND SLUDGE PUMPING SECTIONS AND DETAILS 2

DATE:	JULY 2019
PROJECT NO.:	GABPA134
DESIGNED BY:	M. BRONSTEIN
DRAWN BY:	J. BROWN
CHECKED BY:	A. SHARP

SCALE: 1/4" = 1'

M-007

SHEET 32 OF 150

User: TTHOMAS Spec: AUS-NCSMOD File: I:\ACAD\PROJ\GABPA134 - CSO GROUP 1\BID PACKAGE 2\SHEETS\MECHANICAL\M-007.DWG Scale: 1:1 SavedDate: 5/31/2019 Time: 07:48 Plot Date: Thomas, Travis; 7/31/2019; 08:13 ; Layout: 32

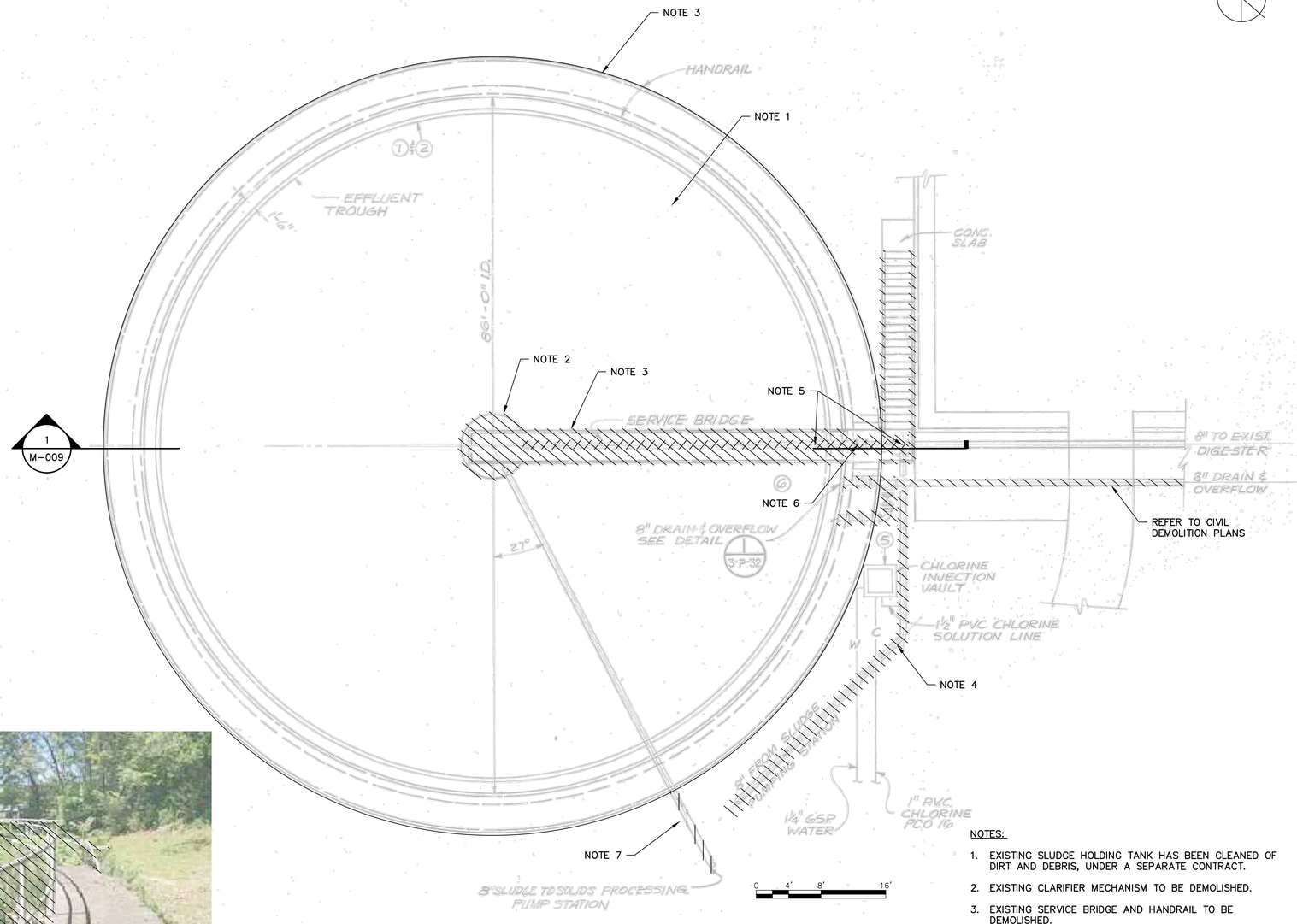

SLUDGE HOLDING TANK PLAN

SCALE: 1/8"=1'

NOTES:

1. EXISTING SLUDGE HOLDING TANK HAS BEEN CLEANED OF DIRT AND DEBRIS, UNDER A SEPARATE CONTRACT.
2. EXISTING CLARIFIER MECHANISM TO BE DEMOLISHED.
3. EXISTING SERVICE BRIDGE AND HANDRAIL TO BE DEMOLISHED.
4. DEMOLISH EXISTING 8" SLUDGE PIPE.
5. DEMOLISH EXISTING 8" INFLUENT TO CENTER WELL, 8" PLUG VALVE W/ ELECTRIC OPERATOR AND EXTENDED ACTUATOR, MOUNTING AND PLUG 8" PIPE TO EXISTING DIGESTER.
6. REMOVE EXISTING LEVEL INSTRUMENT.
7. COORDINATE EXTENT OF DEMOLITION WITH NEW WORK.

REFERENCE DRAWING: 3-P-31 (1981, INTRENCHMENT CREEK COMBINED SEWER OVERFLOW TREATMENT FACILITY)

COPYRIGHT:
ARCADIS U.S., INC.
2016

IF THIS BAR IS NOT 1" INDICATED SCALE IS INCORRECT

NO.	DATE	ISSUED FOR	BY
0	JUL 2019	BIDDING	HG

SEALS

GEORGIA REGISTERED PROFESSIONAL ENGINEER HAMILTON DAY GILES 7/31/19

ARCADIS
BPA
A Joint Venture
2839 Paces Ferry Road
Suite 900
Atlanta, GA 30339
Tel: 770-431-8666
Fax: 770-435-2666
www.arcadis-us.com

ATLANTA, GEORGIA
CITY OF ATLANTA
DEPARTMENT OF WATERSHED MANAGEMENT

EAST AREA WATER QUALITY CONTROL FACILITY IMPROVEMENTS

W.01.02.0085

SHEET TITLE

SLUDGE HOLDING TANK DEMOLITION PLAN

DATE:	JULY 2019
PROJECT NO.:	GABPA134
DESIGNED BY:	M. BRONSTEIN
DRAWN BY:	J. BROWN
CHECKED BY:	W. GRUBBS

SCALE: AS SHOWN

M-008

SHEET 33 OF 150

User:THOMAS Spec:AUS-NCSMOD File:I:\ACAD\PROJ\GABPA134 - CSO GROUP 1\BID PACKAGE 2\SHEETS\MECHANICAL\M-008.DWG Scale:1:1 SavedDate:2/27/2019 Time:18:17 Plot Date: Thomas, Travis; 7/31/2019; 08:14 ; Layout:33

User: TTHOMAS Spec: AUS-NCSM0D File: I:\ACAD\PROJ\GABPA134 - CSO GROUP 1\BID PACKAGE 2\SHEETS\MECHANICAL\M-009.DWG Scale:1:1 SavedDate:2/27/2019 Time:18:23 Plot Date: Thomas, Travis; 7/31/2019; 08:16 ; Layout:34

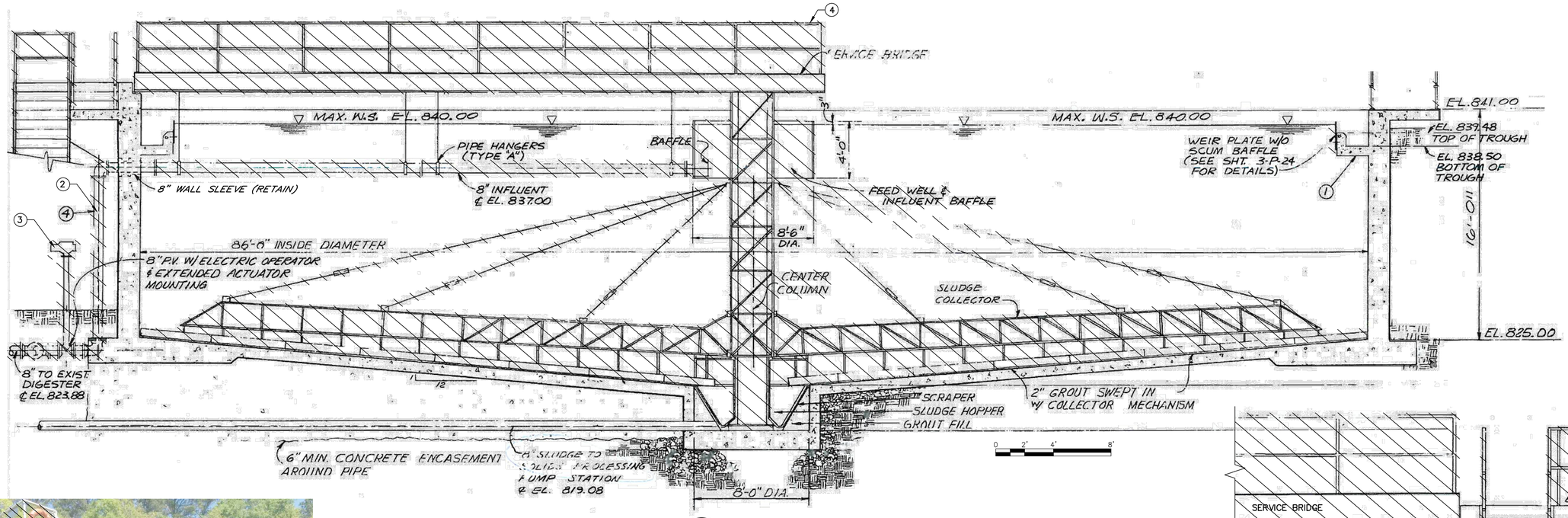

1 M-008 **SECTION**
SCALE: 1/4" = 1'

KEYNOTES:

1. 8" OVERFLOW
2. 8" INFLUENT
3. EXTENDED ACTUATOR MOUNTING FOR 8" PLUG VALVE
4. HANDRAIL

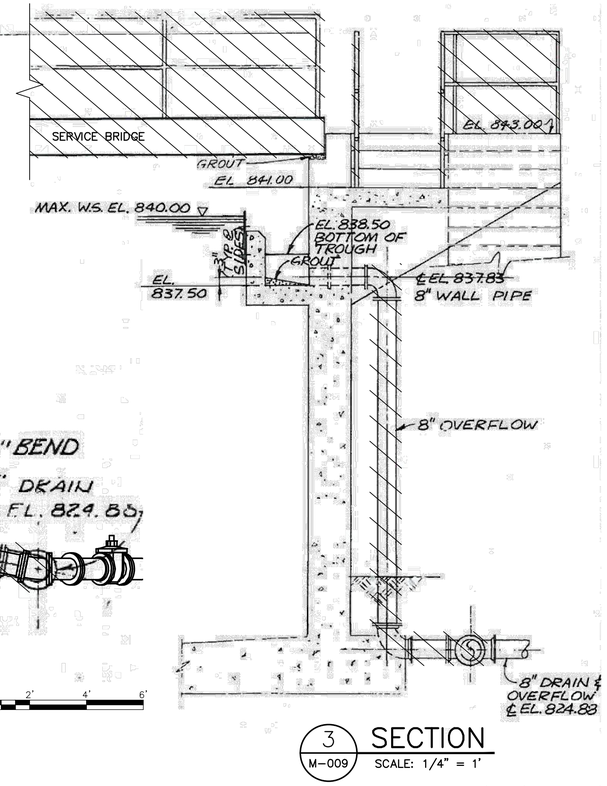

3 M-009 **SECTION**
SCALE: 1/4" = 1'

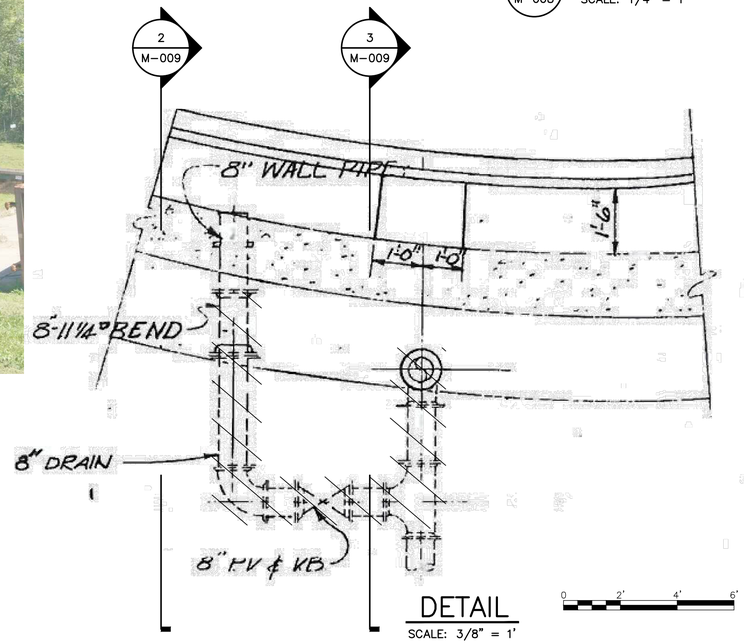

DETAIL
SCALE: 3/8" = 1'

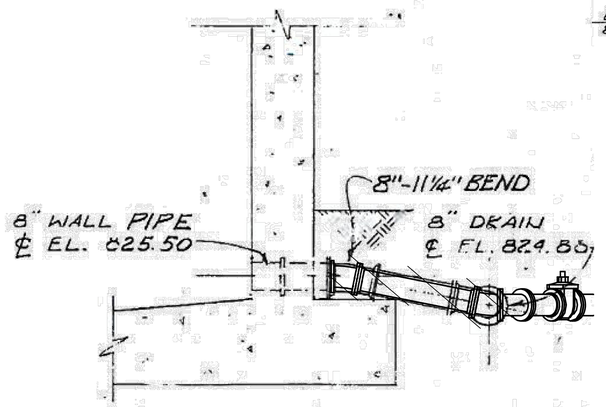

2 M-009 **SECTION**
SCALE: 3/8" = 1'

REFERENCE DRAWING: 3-P-32 (1981, INTRENCHMENT CREEK COMBINED SEWER OVERFLOW TREATMENT FACILITY)

COPYRIGHT: ARCADIS U.S., INC. 2016

IF THIS BAR IS NOT 1" INDICATED SCALE IS INCORRECT

NO.	DATE	ISSUED FOR	BY
0	JUL 2019	BIDDING	HG

SEALS

GEORGIA REGISTERED P.E. PE011536 PROFESSIONAL ENGINEER HAMILTON DAY GILES

ARCADIS BPA A Joint Venture
2839 Paces Ferry Road
Suite 900
Atlanta, GA 30339
Tel: 770-431-8666
Fax: 770-435-2666
www.arcadis-us.com

ATLANTA, GEORGIA
CITY OF ATLANTA
DEPARTMENT OF WATERSHED MANAGEMENT

EAST AREA WATER QUALITY CONTROL FACILITY IMPROVEMENTS

W.01.02.0085

SHEET TITLE

SLUDGE HOLDING TANK DEMOLITION SECTIONS

DATE:	JULY 2019
PROJECT NO.:	GABPA134
DESIGNED BY:	M. BRONSTEIN
DRAWN BY:	J. BROWN
CHECKED BY:	A. SHARP

SCALE: AS SHOWN

M-009

SHEET 34 OF 150

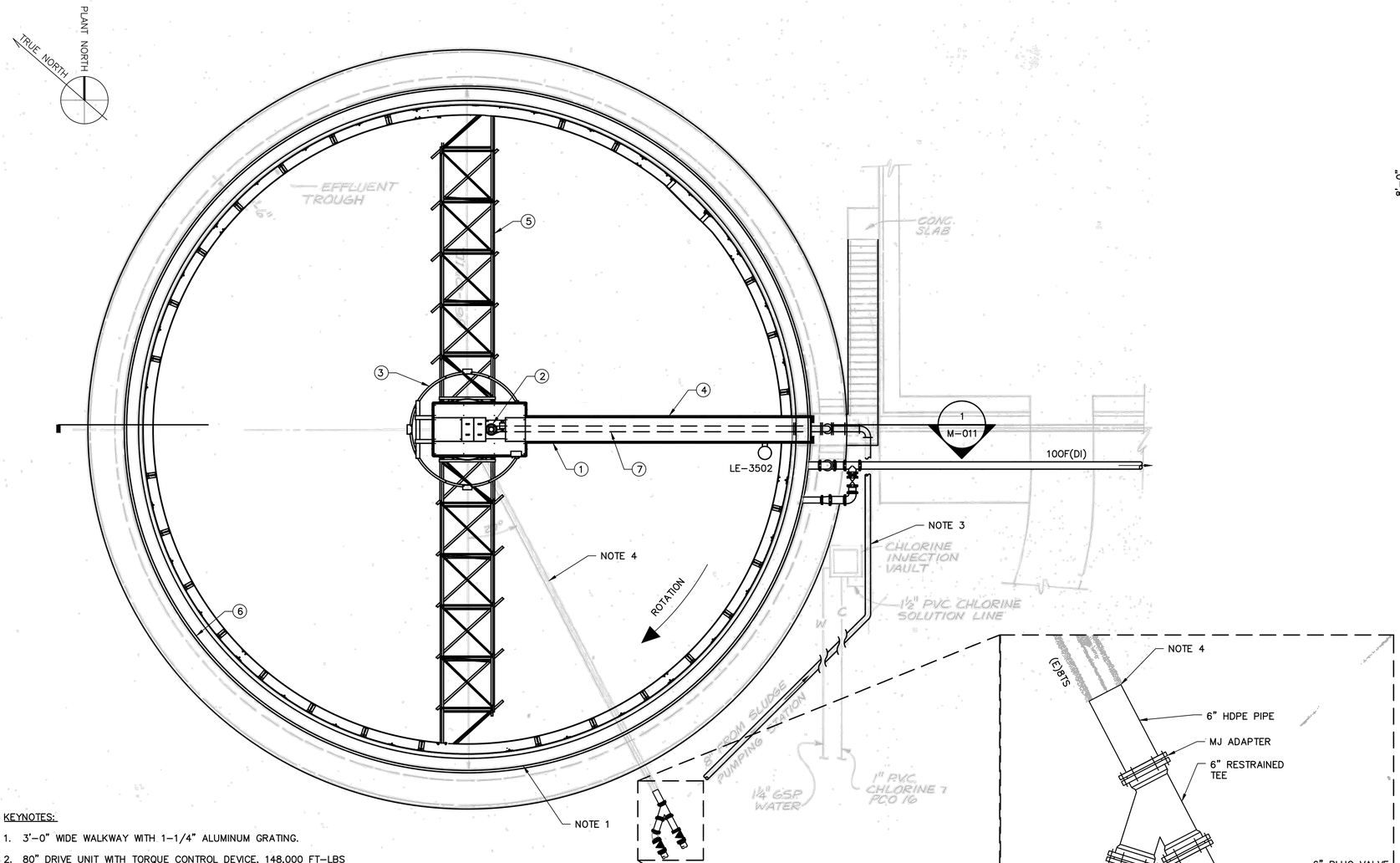

KEYNOTES:

1. 3'-0" WIDE WALKWAY WITH 1-1/4" ALUMINUM GRATING.
2. 80" DRIVE UNIT WITH TORQUE CONTROL DEVICE, 148,000 FT-LBS CONT. RUNNING TORQUE.
3. INFLUENT FEEDWELL.
4. ALUMINUM HANDRAIL WITH TOEBOARD.
5. RAKE ARMS.
6. EFFLUENT TROUGH
7. 8" INFLUENT PIPE

NOTES:

1. CONTRACTOR TO FIELD VERIFY EXISTING TANK DIMENSIONS PRIOR TO FABRICATION OF NEW MECHANISM.
2. NEW CENTER COLUMN TO BE INSTALLED IN THE EXISTING SLUDGE HOPPER. CONTRACTOR TO ENSURE THAT THE NEW COLUMN FITS IN THE EXISTING STRUCTURE.
3. INSTALL NEW 8SL PIPE USING EXISTING 8SL LINE ROUTE.
4. CLEAN EXISTING SL LINE UNDER TANK. CONDUCT CCTV INSPECTION. SLIPLINE EXISTING 8" LINE WITH 6" HDPE, GROUT FILL ANNULAR SPACE.

REFERENCE DRAWING: 3-P-31 (1981, INTRENCHMENT CREEK COMBINED SEWER OVERFLOW TREATMENT FACILITY)

SLUDGE HOLDING TANK PLAN

SCALE: 1/8" = 1'-0"

0 4' 8' 16'

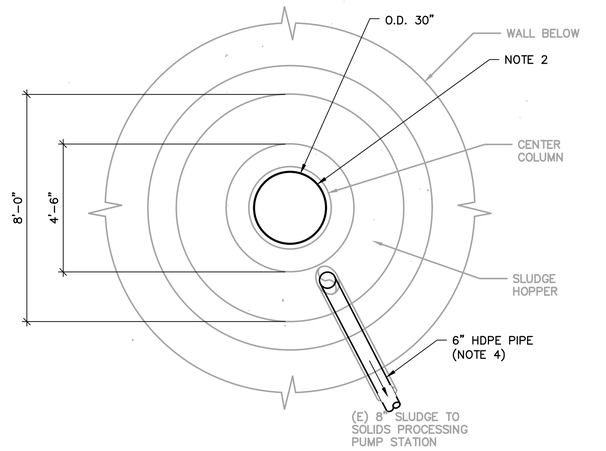

PLAN @ ELEVATION 822.0

SCALE: 3/8" = 1'-0"

0 2' 4' 6'

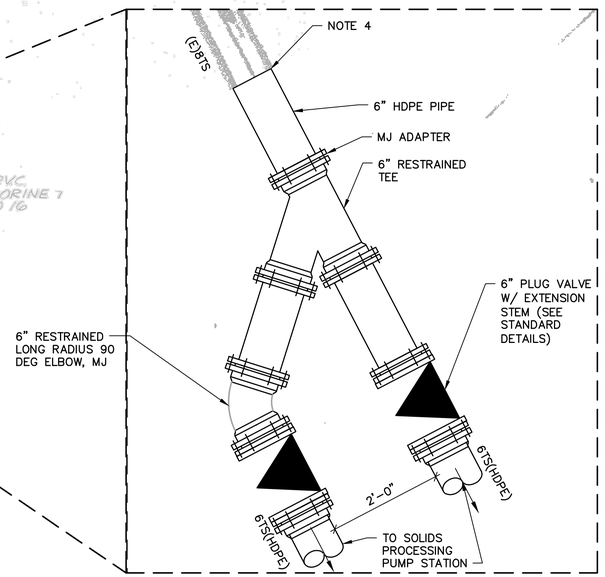

SCALE: 3/4" = 1'-0"

0 1' 2' 3'

COPYRIGHT:
ARCADIS U.S., INC.
2016

IF THIS BAR IS NOT 1" INDICATED SCALE IS INCORRECT

NO.	DATE	ISSUED FOR	BY
0	JUL 2019	BIDDING	HG

SEALS

GEORGIA REGISTERED P.E. PE013536 PROFESSIONAL ENGINEER HAMILTON DAY GILES

ARCADIS
BPA
A Joint Venture
2839 Paces Ferry Road
Suite 900
Atlanta, GA 30339
Tel: 770-431-8666
Fax: 770-435-2666
www.arcadis-us.com

ATLANTA, GEORGIA
CITY OF ATLANTA
DEPARTMENT OF WATERSHED MANAGEMENT

EAST AREA WATER QUALITY CONTROL FACILITY IMPROVEMENTS

W.01.02.0085

SHEET TITLE

SLUDGE HOLDING TANK PLAN

DATE:	JULY 2019
PROJECT NO.:	GABPA134
DESIGNED BY:	M. BRONSTEIN
DRAWN BY:	R. KUNZ
CHECKED BY:	A. SHARP

SCALE: AS SHOWN

M-010

SHEET 35 OF 150

User: TTHOMAS Spec: AUS-NCSM0D File: I:\ACAD\PROJ\GABPA134 - CSO GROUP 1\BID PACKAGE 2\SHEETS\MECHANICAL\M-010.DWG Scale: 1:1 SavedDate: 2/28/2019 Time: 13:59 Plot Date: Thomas, Travis; 7/31/2019; 08:18 ; Layout: 35

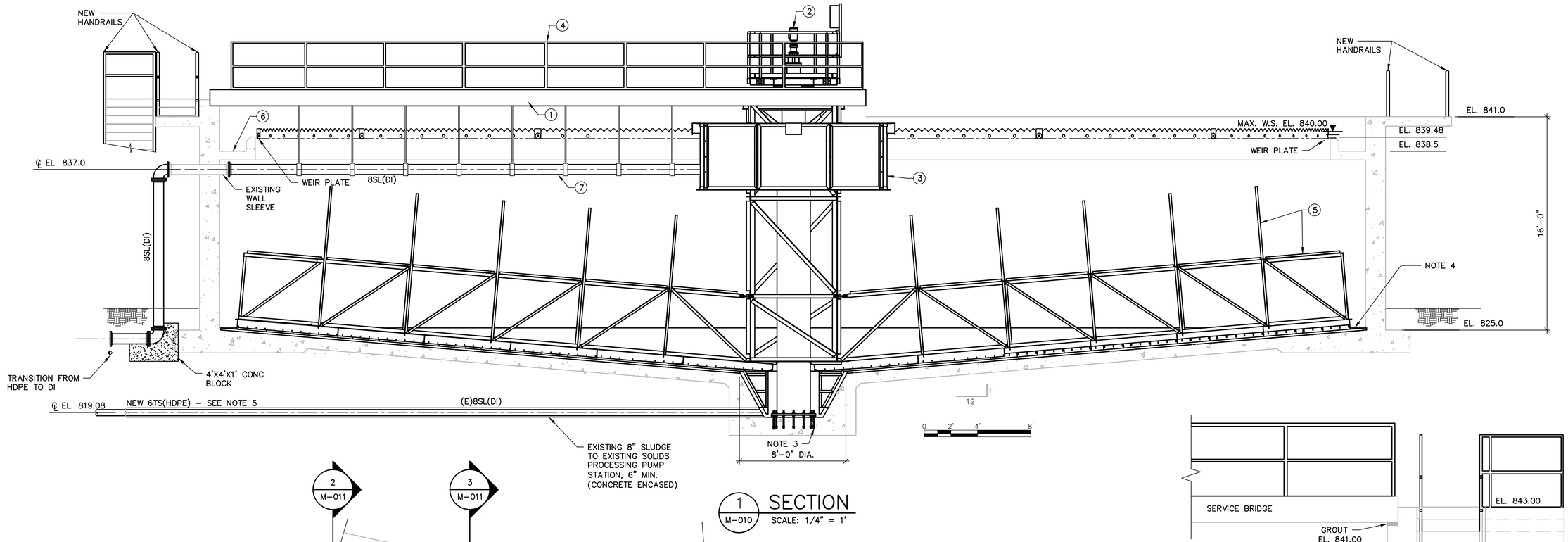

1 M-010 **SECTION**
SCALE: 1/4" = 1'

3 M-011 **SECTION**
SCALE: 1/4" = 1'
0 2' 4' 8'

DETAIL
SCALE: 3/8" = 1'
0 2' 4' 6'

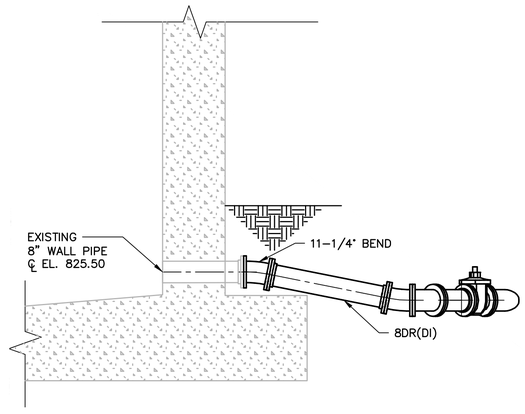

2 M-011 **SECTION**
SCALE: 3/8" = 1'
0 2' 4' 6'

KEYNOTES:

1. 3'–0" WIDE WALKWAY WITH 1–1/4" ALUMINUM GRATING.
2. 80" DRIVE UNIT WITH TORQUE CONTROL DEVICE, 148,000 FT–LBS CONT. RUNNING TORQUE.
3. INFLUENT FEEDWELL.
4. ALUMINUM HANDRAIL WITH TOEBOARD.
5. RAKE ARMS.
6. EFFLUENT TROUGH
7. 8" INFLUENT PIPE

NOTES:

1. CONTRACTOR TO FIELD VERIFY EXISTING TANK DIMENSIONS PRIOR TO FABRICATION OF NEW MECHANISM.
2. NEW CENTER COLUMN TO BE INSTALLED IN THE EXISTING SLUDGE HOPPER. CONTRACTOR TO ENSURE THAT THE NEW COLUMN FITS IN THE EXISTING STRUCTURE.
3. SEE STRUCTURAL DRAWINGS FOR ANCHORING DETAILS.
4. NEW GROUT TOPPING. REFER TO STRUCTURAL DRAWINGS.
5. EXISTING PIPE TO BE SLIPLINED W/6–INCH HDPE.

REFERENCE DRAWING: 3–P–32 (1981, INTRENCHMENT CREEK COMBINED SEWER OVERFLOW TREATMENT FACILITY)

COPYRIGHT: ARCADIS U.S., INC. 2016

IF THIS BAR IS NOT 1" INDICATED SCALE IS INCORRECT

NO.	DATE	ISSUED FOR	BY
0	JUL 2019	BIDDING	HG

SEALS

GEORGIA REGISTERED No. PE011536 PROFESSIONAL ENGINEER HAMILTON A. GILES 07/31/19

ARCADIS
BPA
A Joint Venture
2839 Paces Ferry Road
Suite 900
Atlanta, GA 30339
Tel: 770–431–8666
Fax: 770–435–2666
www.arcadis–us.com

RESURGENS 1901 ATLANTA, GA 1991

ATLANTA, GEORGIA
CITY OF ATLANTA
DEPARTMENT OF WATERSHED MANAGEMENT

EAST AREA WATER QUALITY CONTROL FACILITY IMPROVEMENTS

W.01.02.0085

SHEET TITLE

SLUDGE HOLDING TANK SECTIONS

DATE:	JULY 2019
PROJECT NO.:	GABPA134
DESIGNED BY:	M. BRONSTEIN
DRAWN BY:	A. SUMNER
CHECKED BY:	A. SHARP

SCALE: AS SHOWN

M–011

SHEET 36 OF 150

User:THOMAS Spec:AUS-NCSMOD File:I:\ACAD\PROJ\GABPA134 – CSO GROUP 1\BID PACKAGE 2\SHEETS\MECHANICAL\M-011.DWG Scale:1:1 SavedDate:3/26/2019 Time:11:27 Plot Date: Thomas, Travis: 7/31/2019, 08:20 ; Layout:36

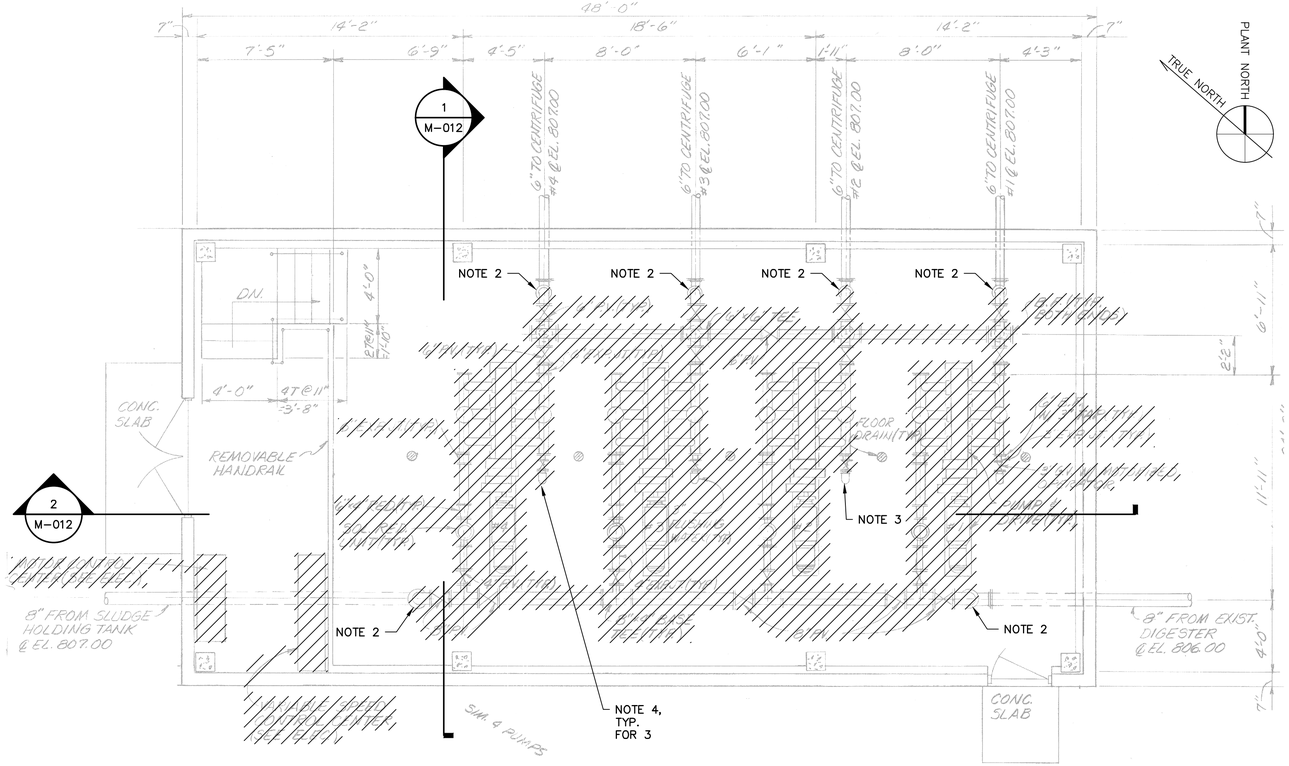

SOLIDS PROCESSING PUMP STATION PLAN

SCALE: 1/4" = 1'

0 2' 4' 8'

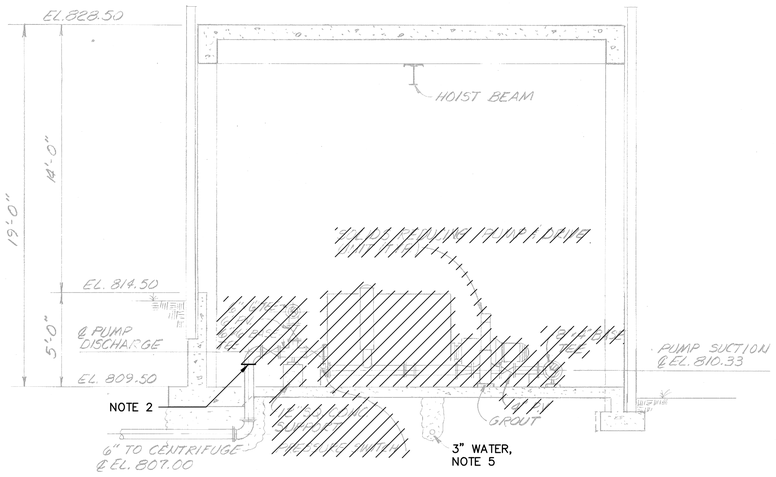

1 M-012 SECTION

SCALE: 1/4" = 1'

0 2' 4' 8'

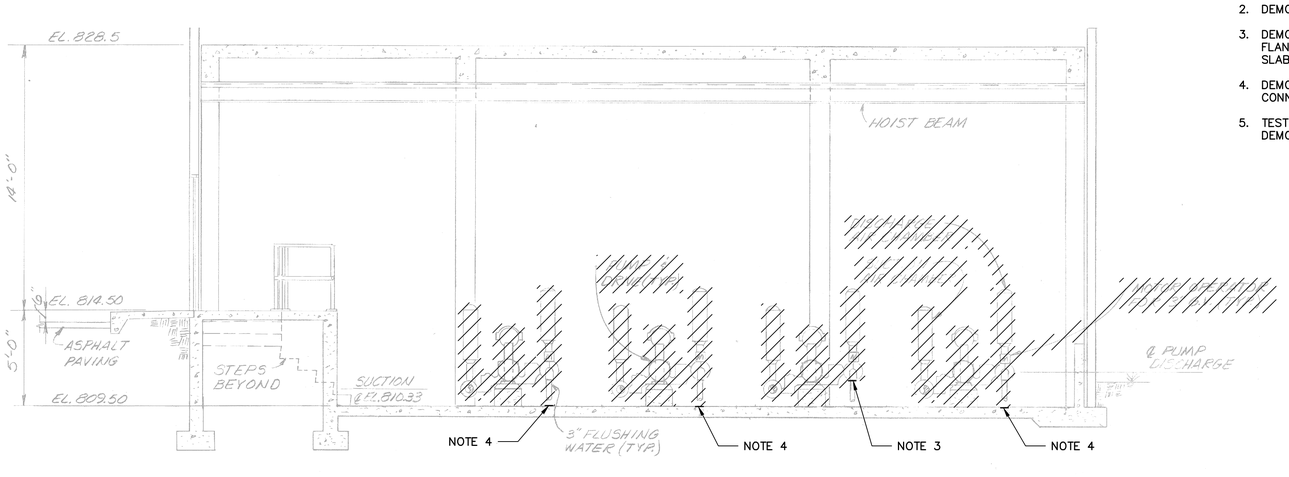

2 M-012 SECTION

SCALE: 1/4" = 1'

0 2' 4' 8'

NOTES:

1. CONTRACTOR TO FIELD VERIFY ALL DIMENSIONS.
2. DEMOLISH EXISTING PIPING TO FLANGE ABOVE SLAB.
3. DEMOLISH EXISTING FLUSHING WATER CONNECTION TO FLANGE CONNECTION WITH 3" GATE VALVE ABOVE SLAB.
4. DEMOLISH THE EXISTING 3" FLUSHING WATER CONNECTION TO SLAB AND CAP.
5. TEST EXISTING 3" FLUSHING WATER SYSTEM PRIOR TO DEMOLITION.

REFERENCE DRAWING 3-P-33 (1981 – INTRENCHMENT CREEK COMBINED SEWER OVERFLOW TREATMENT FACILITY)

COPYRIGHT: ARCADIS U.S., INC. 2016

IF THIS BAR IS NOT 1" INDICATED SCALE IS INCORRECT

NO.	DATE	ISSUED FOR	BY
0	JUL 2019	BIDDING	HG

SEALS

GEORGIA REGISTERED H. GILES HAMILTON DAY ENGINEER 24766 PROFESSIONAL

ARCADIS BPA A Joint Venture
2839 Paces Ferry Road
Suite 900
Atlanta, GA 30339
Tel: 770-431-8666
Fax: 770-435-2666
www.arcadis-us.com

RESURGENS 1870 ATLANTA, GA. 2001

ATLANTA, GEORGIA
CITY OF ATLANTA
DEPARTMENT OF WATERSHED MANAGEMENT

EAST AREA WATER QUALITY CONTROL FACILITY IMPROVEMENTS

W.01.02.0085

SHEET TITLE

SOLIDS PROCESSING PUMP STATION DEMOLITION PLAN AND SECTIONS

DATE:	JULY 2019
PROJECT NO.:	GABPA134
DESIGNED BY:	M. BRONSTEIN
DRAWN BY:	A. SUMNER
CHECKED BY:	A. SHARP

SCALE: 1/4" = 1'

M-012

SHEET 37 OF 150

User: THOMAS Spec: AUS-NCSMOD File I: \ACAD\PROJ\GABPA134 - CSO GROUP 1\BID PACKAGE 2\SHEETS\MECHANICAL\M-012.DWG Scale: 1:1 SavedDate: 8/8/2018 Time: 11:17 Plot Date: Thomas, Travis; 7/31/2019, 08:22 ; Layout: 37

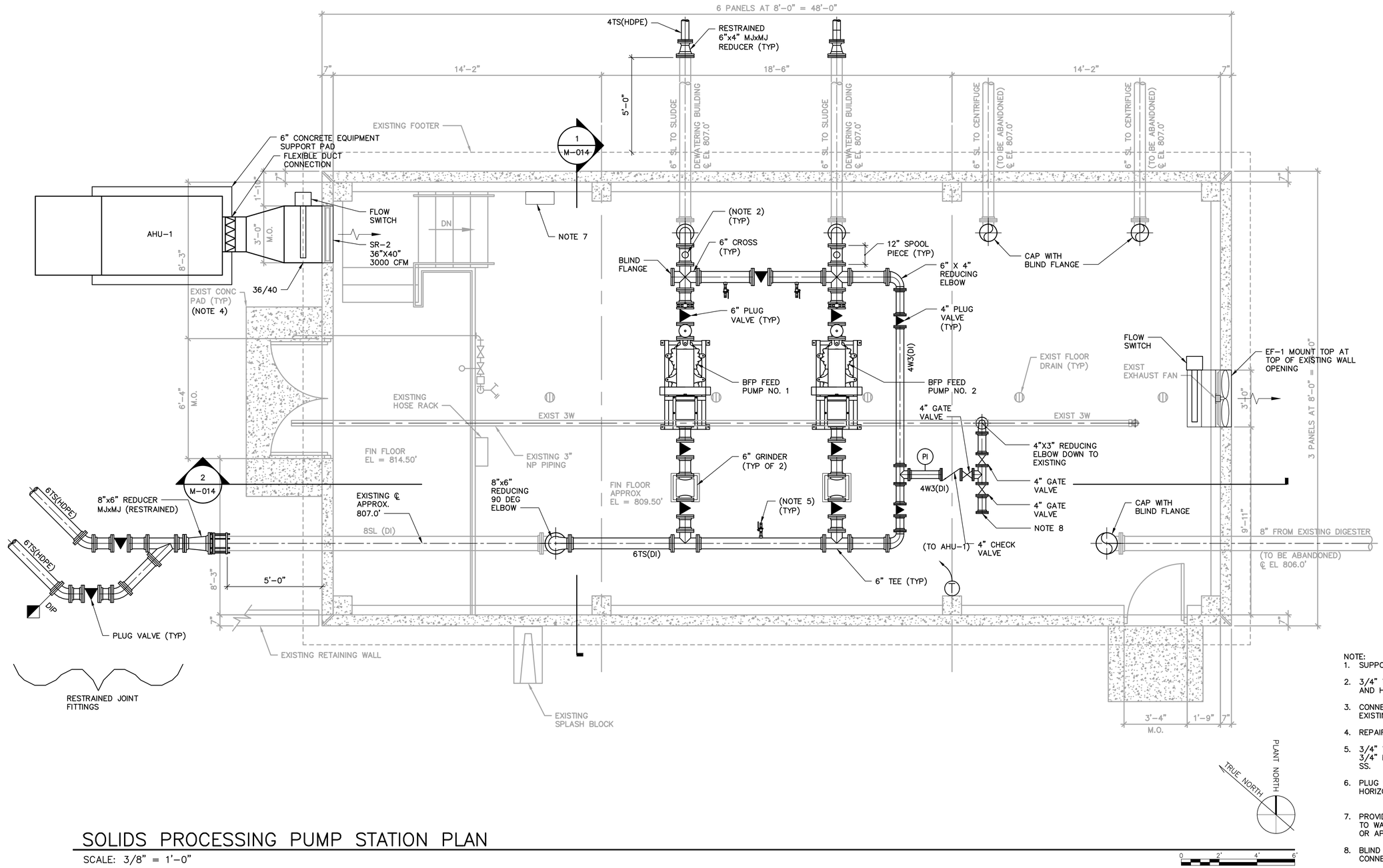

SOLIDS PROCESSING PUMP STATION PLAN

SCALE: 3/8" = 1'-0"

NOTE:
1. SUPPORT ALL PIPING AS REQUIRED.
2. 3/4" THREADED NIPPLE WITH 316 SS BALL VALVE AND HOSE.
3. CONNECT NEW 3" FLUSHING WATER PIPE TO EXISTING FLANGED 3" PIPE ABOVE SLAB.
4. REPAIR EXISTING SLAB AND ASSOCIATED GRADING.
5. 3/4" THREADED CONNECTION, 3/4" BALL VALVE, 3/4" NIPPLE AND 3/4" QUICK COUPLING IN 316 SS.
6. PLUG VALVE STEMS TO BE MOUNTED HORIZONTALLY.
7. PROVIDE PORTABLE EYEWASH STATION MOUNTED TO WALL. STATION SHALL BE PORTA STREAM II OR APPROVED EQUAL.
8. BLIND FLANGE FOR FUTURE PLANT WATER CONNECTION.

COPYRIGHT: ARCADIS U.S., INC. 2016

IF THIS BAR IS NOT 1" INDICATED SCALE IS INCORRECT

NO.	DATE	ISSUED FOR	BY
0	JUL 2019	BIDDING	HG

SEALS

GEORGIA REGISTERED PROFESSIONAL ENGINEER HAMILTON DAY GILES 5/31/19

ARCADIS BPA A Joint Venture
2839 Paces Ferry Road
Suite 900
Atlanta, GA 30339
Tel: 770-431-8666
Fax: 770-435-2666
www.arcadis-us.com

ATLANTA, GEORGIA
CITY OF ATLANTA
DEPARTMENT OF WATERSHED MANAGEMENT

EAST AREA WATER QUALITY CONTROL FACILITY IMPROVEMENTS

W.01.02.0085

SHEET TITLE

SOLIDS PROCESSING PUMP STATION PLAN

DATE:	JULY 2019
PROJECT NO.:	GABPA134
DESIGNED BY:	W. HACKETT
DRAWN BY:	A. SUMNER
CHECKED BY:	A. SHARP

SCALE: 3/8" = 1'-0"

M-013

SHEET 38 OF 150

User:TTHOMAS Spec:AUS-NCSMOD File:I:\ACAD\PROJ\GABPA134 - CSO GROUP 1\BID PACKAGE 2\SHEETS\MECHANICAL\M-013.DWG Scale:1:1 SavedDate:3/26/2019 Plot Date: Thomas, Travis; 7/31/2019; 08:23 ; Layout:38

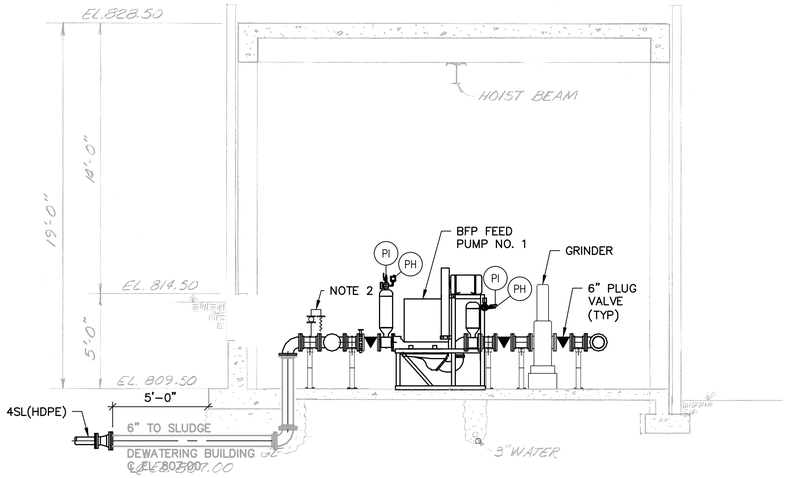

1 / M-013 SECTION

SCALE: 1/4" = 1'

0 2' 4' 8'

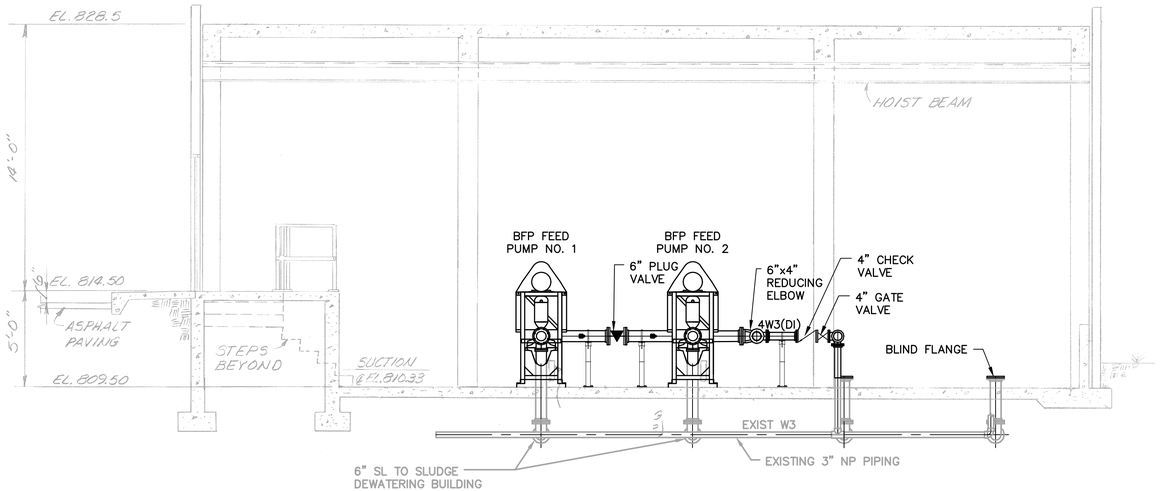

2 / M-013 SECTION

SCALE: 1/4" = 1'

0 2' 4' 8'

LIST OF REFURBISHMENT ACTIVITIES

WORK ITEM	DESCRIPTION	NOTES
G1	CLEAN BUILDING INTERIOR	SEE SPEC SECTION 09900, PAINTING
G2	REPAINT ALL WALLS	SEE SPEC SECTION 09900, PAINTING
G3	REPAIR VISIBLE CRACKS IN CONCRETE FLOORS AND WALLS. SEAL ALL CONCRETE JOINTS.	
M1	CLEAN ALL EXISTING FLOOR DRAIN LINES ALL THE WAY TO TRICKLING FILTER EFFLUENT CHANNEL DISCHARGE. REPLACE ALL FLOOR DRAINS.	
M2	CLEAN GRIT AND SLUDGE FROM INTERIOR OF EXISTING SLUDGE PIPING	
M3	CLEAN EXTERIOR OF EXISTING METAL PIPING TO REMOVE PAINT	SEE SPEC SECTION 09900, PAINTING
M4	TEST ALL EXISTING WATER PIPING (W1, W2, AND W3) AND HOSE BIBBS	
M5	MANUFACTURER'S REPRESENTATIVE TO INSPECT AND REPAIR EXISTING HOIST. MFG IS SHAW BOX/DRESSER, CAPACITY 2-TONS.	

NOTES:
1. MOUNT PUMP FRAMES TO FLOOR WITH MANUFACTURER RECOMMENDED ANCHOR BOLTS. SHIM AS REQUIRED.
2. 3/4" THREADED NIPPLE WITH 316 SS BALL VALVE AND HOSE.
3. PROVIDE RIGID PIPE SUPPORTS FOR PUMP SUCTION AND DISCHARGE PIPING.
4. PROVIDE SUPPORTS FOR FLUSHING WATER PIPING.

COPYRIGHT:
ARCADIS U.S., INC.
2016

IF THIS BAR IS NOT 1" INDICATED SCALE IS INCORRECT

NO.	DATE	ISSUED FOR	BY
0	JUL 2019	BIDDING	HG

SEALS

GEORGIA REGISTERED PE 031536 PROFESSIONAL ENGINEER HAMILTON DAY GILES

ARCADIS
BPA
A Joint Venture
2839 Paces Ferry Road
Suite 900
Atlanta, GA 30339
Tel: 770-431-8666
Fax: 770-435-2666
www.arcadis-us.com

ATLANTA, GEORGIA
CITY OF ATLANTA
DEPARTMENT OF WATERSHED MANAGEMENT

EAST AREA WATER QUALITY CONTROL FACILITY IMPROVEMENTS

W.01.02.0085

SHEET TITLE

SOLIDS PROCESSING PUMP STATION SECTIONS AND DETAILS

DATE: JULY 2019
PROJECT NO.: GABPA134
DESIGNED BY: M. BRONSTEIN
DRAWN BY: J. BROWN
CHECKED BY: W. GRUBBS

SCALE: 3/8" = 1'-0"

M-014

SHEET 39 OF 150

User: TTHOMAS Spec: AUS-NCSM0D File: I:\ACAD\PROJ\GABPA134 - CSO GROUP 1\BID PACKAGE 2\SHEETS\MECHANICAL\M-014.DWG Scale:1:1 SavedDate:6/20/2019 Time:16:40 Plot Date: Thomas, Travis; 7/31/2019; 08:26 ; Layout:39

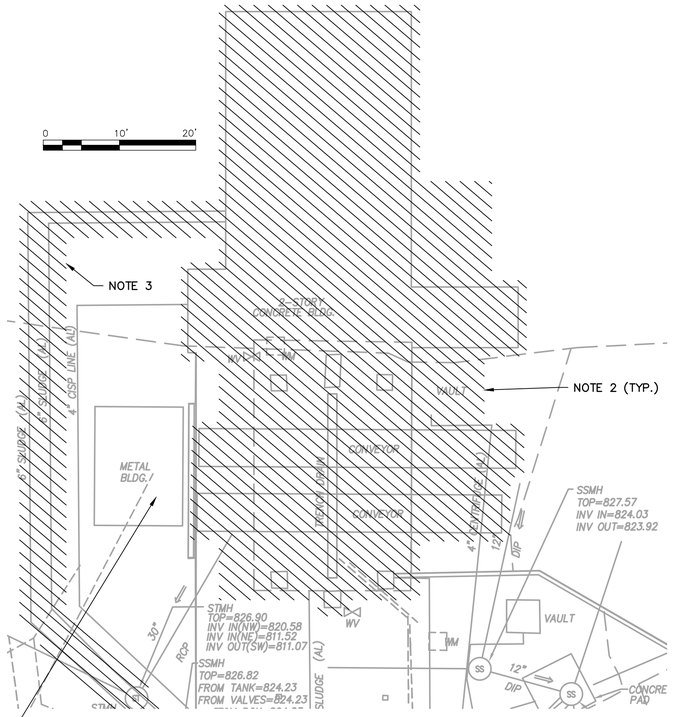

NOTE 5

RELOCATE METAL BUILDING AND ROLL-OFF CONTAINERS (CONTRACTORS TO COORDINATE W/ PLANT STAFF FOR THE NEW LOCATION.)(NOTE 6)

NOTES:

1. DEMOLISH EXISTING CENTRIFUGE STRUCTURE AND FOUNDATION SUPPORTS.
2. DEMOLISH & FILL EXISTING VAULTS & BOXES LOCATED BENEATH PROPOSED SLUDGE DEWATERING BUILDING FOOTPRINT.
3. DEMOLISH AS NOTED ON CIVIL DRAWINGS.
4. CONTRACTOR TO COORDINATE WITH CITY DURING DEMOLITION AND SALVAGE EQUIPMENT AS REQUESTED BY THE CITY.
5. CONTRACTOR TO COORDINATE AND EXECUTE REROUTE OF EXISTING CABLE CURRENTLY RUNNING ACROSS PLATFORM FRAME WITH PLANT STAFF.
6. EXISTING CONTAINERS & BUILDING TO BE MOVED BY CONTRACTOR, TO LOCATION ON SITE, SUITABLE TO THE CITY.

REFERENCE DRAWINGS: 3-P-34, 3-P-35 AND 3-P-36 (INTRENCHMENT CREEK COMBINED SEWER OVERFLOW TREATMENT FACILITY, 1981)

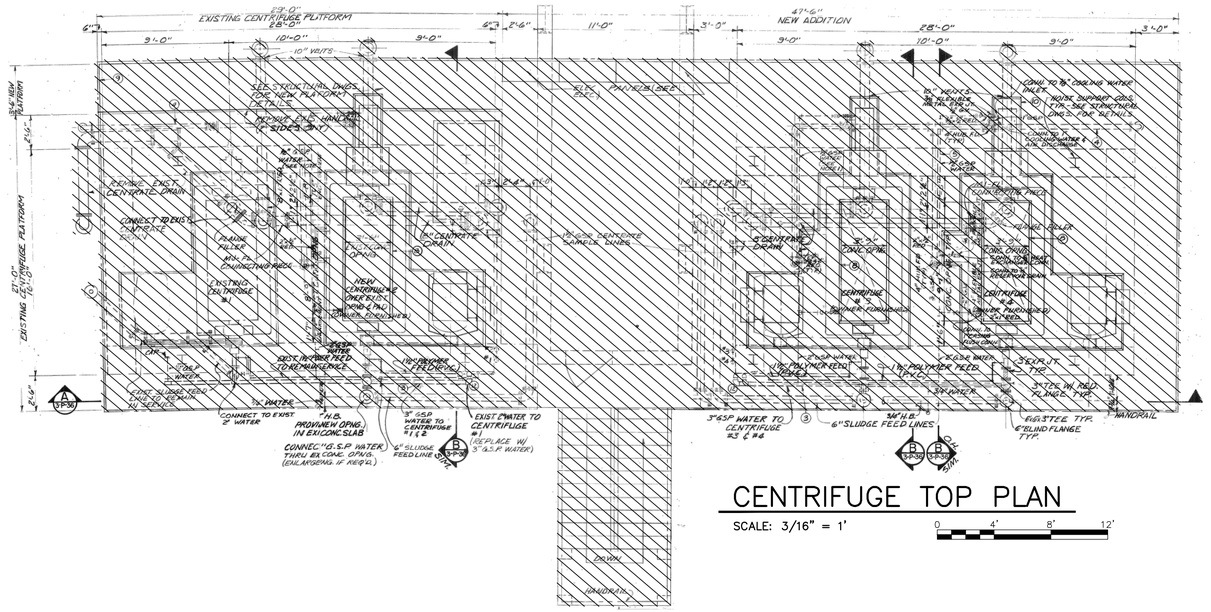

CENTRIFUGE TOP PLAN

SCALE: 3/16" = 1'

0 4' 8' 12'

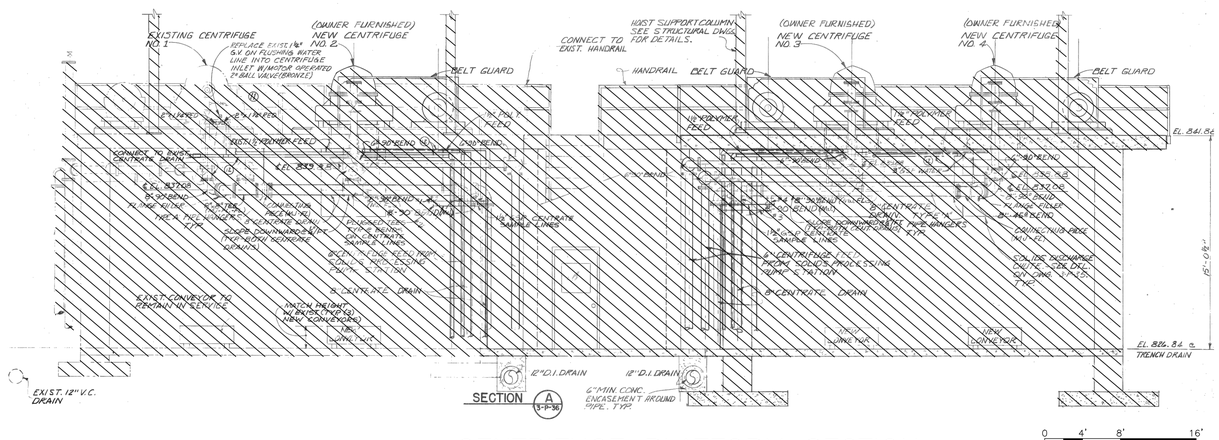

CENTRIFUGE PLATFORM SECTION

SCALE: 1/8" = 1'

NO.	DATE	ISSUED FOR	BY
0	JUL 2019	BIDDING	HG

COPYRIGHT: ARCADIS U.S., INC. 2016

IF THIS BAR IS NOT 1" INDICATED SCALE IS INCORRECT

SEALS

GEORGIA REGISTERED J.G. DEVISH PROFESSIONAL ENGINEER HAMILTON DAY GILES 7/31/19

ARCADIS BPA A Joint Venture

2839 Paces Ferry Road
Suite 900
Atlanta, GA 30339
Tel: 770-431-8666
Fax: 770-435-2666
www.arcadis-us.com

RESURGENS ATLANTA, GA. 1870 1901

ATLANTA, GEORGIA
CITY OF ATLANTA
DEPARTMENT OF WATERSHED MANAGEMENT

EAST AREA WATER QUALITY CONTROL FACILITY IMPROVEMENTS

W.01.02.0085

SHEET TITLE

CENTRIFUGE PLATFORM DEMOLITION PLAN AND SECTIONS

DATE:	JULY 2019
PROJECT NO.:	GABPA134
DESIGNED BY:	W. HACKETT
DRAWN BY:	J. BROWN
CHECKED BY:	W. GRUBBS

SCALE: AS SHOWN

M-015

SHEET 40 OF 150

User: TTHOMAS Spec: AUS-NCSM0D File I: \ACAD\PROJ\GABPA134 - CSO GROUP 1\BID PACKAGE 2\SHEETS\MECHANICAL\M-015.DWG Scale: 1:1 SavedDate: 3/26/2019 Time: 11:04 Plot Date: Thomas, Travis: 7/31/2019; 08:28 ; Layout: 40

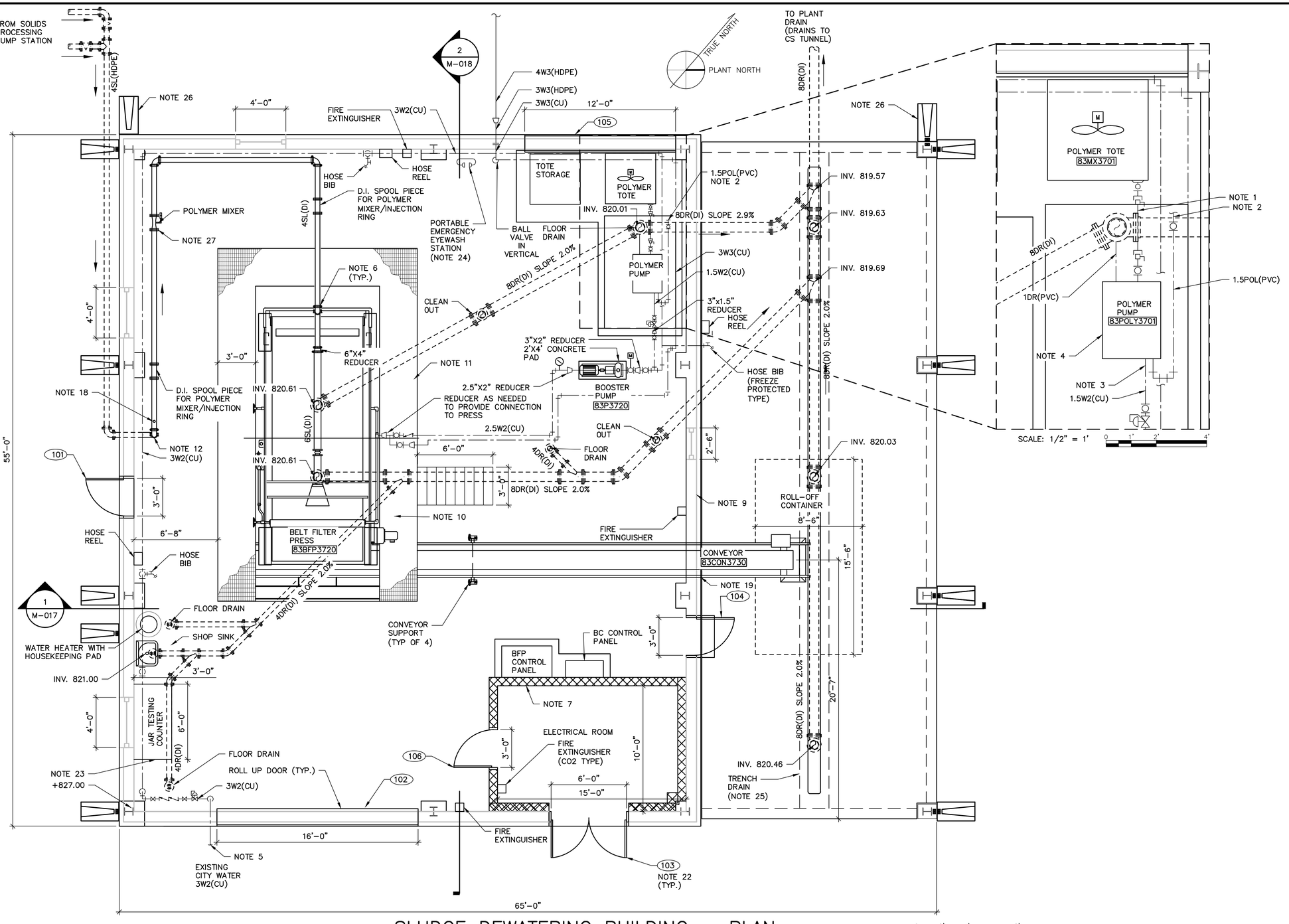

SLUDGE DEWATERING BUILDING – PLAN

SCALE: 1/4" = 1'

NOTES:

1. PROVIDE 1" HOSE (KANAFLEX 110CL OR APPROVED EQUAL) OF SUFFICIENT LENGTH FOR TOTE. COORDINATE LOCATIONS WITH OWNER. PROVIDE CONNECTION TO TOTE VALVE AS REQUIRED BY TOTE MANUFACTURER. INCLUDE ANY PIPE AND FITTINGS NECESSARY TO PROVIDE A QUICK CONNECT END CONNECTION.
2. ROUTE POL–PVC PIPES TO THE LOCATIONS REQUIRED FOR POLYMER MIXER/INJECTION RINGS. THE FINAL LOCATIONS FOR POLYMER INJECTION TO BE DETERMINED DURING START–UP AND TESTING.
3. PROVIDE FITTINGS NECESSARY TO MAKE UP CONNECTIONS TO POLYMER PUMP SYSTEMS.
4. PACKAGED POLYMER SYSTEM (INCLUDING PUMP) TO BE PROVIDED ON SKID BY VENDOR.
5. CONTRACTOR TO CONNECT TO EXISTING CITY WATER SYSTEM. FIELD VERIFY & ADJUST ROUTING AS NEEDED.
6. FOR ALL INTERIOR ABOVE GROUND SL PIPE CONNECTIONS USE GROOVED JOINT COUPLINGS AS INDICATED.
7. CMU WALLS.
8. BELT FILTER PRESS VENDOR TO PACKAGE PRESS, MOTOR, BOOSTER PUMP, PLATFORM, CONTROL PANEL AND POLYMER MIXER.
9. BASE 30" OF PERIMETER WALL IS CONCRETE.
10. PROVIDE 36" CLEARANCE ON WALKWAY AROUND BELT FILTER PRESS.
11. ALUMINUM ACCESS PLATFORM, RAILING, SUPPORTS, HANDRAILS, APPURTENANCES, & STAIRS BY BELT PRESS MFG.
12. MATERIAL TRANSITIONS FROM HDPE BELOW GRADE TO DI ABOVE GRADE/SLAB.
13. PROVIDE A MINIMUM OF 2 INCHES BETWEEN TOP OF LOAD SKIRT AND BELT PRESS DISCHARGE POINT
14. FIELD LOCATE PIPING. COORDINATE LOCATION OF TIE–INS WITH BELT PRESS SUPPLIER. PROVIDE 3 INCH EQUIPMENT PAD FOR THE NEW BOOSTER PUMPS.
15. ALL POLYMER SOLUTION VALVES SHALL BE TRUE UNION PVC BALL VALVES UNLESS NOTED OTHERWISE.
16. ALL PIPING TO BE SUPPORTED PER THE SPECIFICATIONS.
17. ALL CHEMICAL SOLUTION PIPING TO BE SCH. 80 PVC UNLESS NOTED OTHERWISE.
18. PROVIDE 1" 316SS BALL VALVE WITH EXTENSION LEVER. HARD PIPE DISCHARGE WITH PVC SCH 80. TO 3–FT ABOVE FLOOR, AND RUBBER HOSE TO 1–FT ABOVE FLOOR.
19. PROVIDE WALL OPENING AS REQ'D IN WALL TO ALLOW CONVEYOR AND FRAME TO PASS. REINFORCE OPENING AS REQ'D. PROVIDE WEATHER STRIPS, FLEXIBLE CLEAR TYPE AT WALL OPENING TO PREVENT WIND AND RAIN FROM ENTERING BUILDING. OPENING SHALL BE TRIMMED WITH ALUMINUM SLEEVE AND INTERIOR AND EXTERIOR FLASHING.
20. LOCATION OF PIPE AS SHOWN MAY BE SUBJECT TO CHANGE BASED ON BELT PRESS SUPPLIED. CONTRACTOR SHALL BE RESPONSIBLE FOR COORDINATING PIPING WITH ENGINEER AND SUPPLIER AT NO ADDITIONAL COST TO THE OWNER.
21. COORDINATE EXACT FAN OPENINGS REQ'D WITH FAN SUPPLIER.
22. FOR DOOR SCHEDULES, REFERENCE SHEET S–015.
23. COUNTER TO BE HAMILTON SCIENTIFIC LABORATORY TABLE – MODULAR STEEL OR EQUAL.
24. CONTRACTOR TO PROVIDE PORTABLE EYEWASH STATION AND ASSOCIATED MOUNTING. EYEWASH STATION SHALL BE A PORTASTREAM II EYEWASH STATION OR APPROVED EQUAL.
25. REMOVABLE GRATING TO BE INSTALLED OVER TRENCH DRAIN.
26. ROUTE ROOF DRAINS AT THESE LOCATIONS TO DISCHARGE TO THE PLANT WEST SIDE OF THE SLUDGE DEWATERING BUILDING.
27. PROVIDE FLANGE JOINTS FOR POLYMER MIXER UNITS.

COPYRIGHT: ARCADIS U.S., INC. 2016

IF THIS BAR IS NOT 1" INDICATED SCALE IS INCORRECT

NO.	DATE	ISSUED FOR	BY
0	JUL 2019	BIDDING	HG

SEALS

GEORGIA REGISTERED NO. PE021536 PROFESSIONAL ENGINEER HAMILTON DAY GILES 7/31/19

ARCADIS A Joint Venture
BPA
2839 Paces Ferry Road
Suite 900
Atlanta, GA 30339
Tel: 770–431–8666
Fax: 770–435–2666
www.arcadis–us.com

RESURGENS 1847 ATLANTA, GA. 1961

ATLANTA, GEORGIA
CITY OF ATLANTA
DEPARTMENT OF WATERSHED MANAGEMENT

EAST AREA WATER QUALITY CONTROL FACILITY IMPROVEMENTS

W.01.02.0085

SHEET TITLE

SLUDGE DEWATERING BUILDING PLAN

DATE:	JULY 2019
PROJECT NO.:	GABPA134
DESIGNED BY:	W. HACKETT
DRAWN BY:	C. MARTINI
CHECKED BY:	W. GRUBBS

SCALE: AS SHOWN

M–016

SHEET 41 OF 150

User: TTHOMAS Spec: AUS–NCSMOD File: I:\ACAD\PROJ\GABPA134 – CSO GROUP 1\BID PACKAGE 2\SHEETS\MECHANICAL\M–016.DWG Scale: 1:1 SavedDate: 6/20/2019 Time: 17:14 Plot Date: Thomas, Travis: 7/31/2019; 08:30 ; Layout: 41

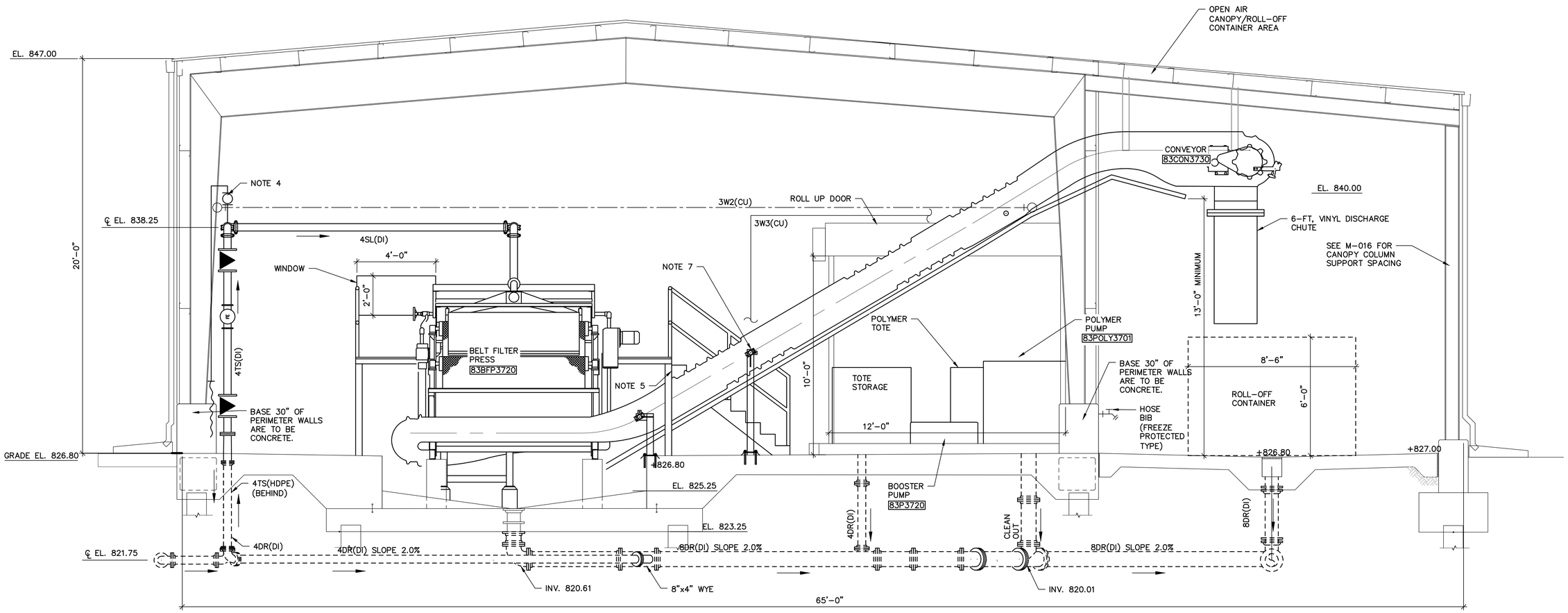

1 / M-016 SLUDGE DEWATERING BUILDING – SECTION

NOTES:

1. CONTRACTOR SHALL COORDINATE LOCATION OF BELT CONVEYOR & BELT PRESS.
2. PROVIDE A MINIMUM CLEARANCE OF 2" BETWEEN TOP OF LOAD SKIRT & BELT PRESS DISCHARGE POINT.
3. ALL POLYMER SOLUTION PIPING SHALL BE SCHEDULE 80 PVC UNLESS NOTED OTHERWISE.
4. 1" TYPE 316SS BALL VALVE.
5. CONTRACTOR TO PROVIDE MINIMUM CLEARANCE BETWEEN CONVEYOR AND PLATFORM RECOMMENDED BY MANUFACTURER.
6. PIPES LOCATED BENEATH SLAB SHALL BE ENCASED IN CONCRETE. SEE SHEET S-012 FOR DETAIL.
7. CONVEYOR SUPPORTS SHALL BE INCLUDED IN MANUFACTURER'S SCOPE OF SUPPLY AND INSTALLED PER MANUFACTURER'S REQUIREMENTS.

0 2' 4' 6'

COPYRIGHT: ARCADIS U.S., INC. 2016

IF THIS BAR IS NOT 1" INDICATED SCALE IS INCORRECT

NO.	DATE	ISSUED FOR	BY
0	JUL 2019	BIDDING	HG

SEALS

GEORGIA REGISTERED P.E. PE017536 PROFESSIONAL ENGINEER HAMILTON DAY GILES

ARCADIS BPA A Joint Venture
2839 Paces Ferry Road
Suite 900
Atlanta, GA 30339
Tel: 770-431-8666
Fax: 770-435-2666
www.arcadis-us.com

ATLANTA, GEORGIA
CITY OF ATLANTA
DEPARTMENT OF WATERSHED MANAGEMENT

EAST AREA WATER QUALITY CONTROL FACILITY IMPROVEMENTS

W.01.02.0085

SHEET TITLE

SLUDGE DEWATERING BUILDING SECTIONS

DATE:	JULY 2019
PROJECT NO.:	GABPA134
DESIGNED BY:	W. HACKETT
DRAWN BY:	J. BROWN
CHECKED BY:	W. GRUBBS

SCALE: 3/8"=1'

M-017

SHEET 42 OF 150

User: TTHOMAS Spec: AUS-NCSM0D File: I:\ACAD\PROJ\GABPA134 - CSO GROUP 1\BID PACKAGE 2\SHEETS\MECHANICAL\M-017.DWG Scale:1:1 SavedDate:3/26/2019 Time:11:25 Plot Date: Thomas, Travis: 7/31/2019; 08:31 ; Layout:42

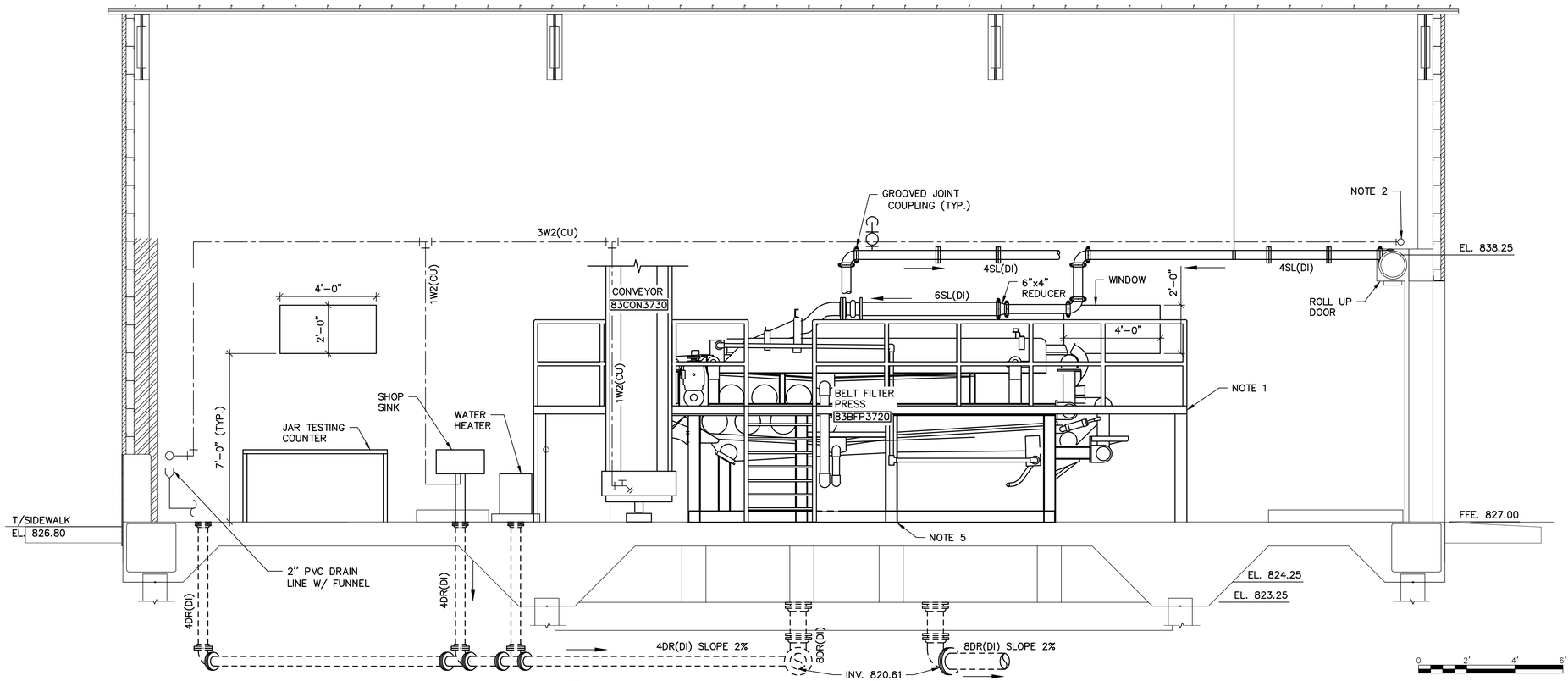

2 M-016 SLUDGE DEWATERING BUILDING – SECTION

SCALE: 3/8" = 1'-0"

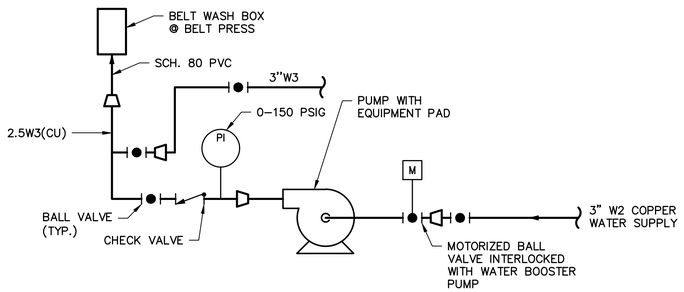

WATER BOOSTER PUMP SCHEMATIC DETAIL

SCALE: N.T.S.

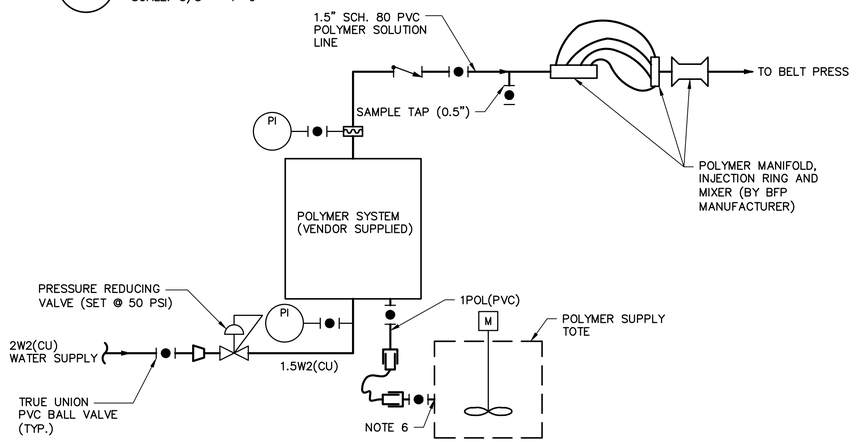

POLYMER FEED SYSTEM SCHEMATIC DETAIL

SCALE: N.T.S.

NOTES:

1. ALUMINUM ACCESS PLATFORM, RAILING, SUPPORTS, HANDRAILS, APPURTENANCES, & STAIRS BY BELT PRESS MFG.
2. COORDINATE ROUTING OF W2 AND W3 LINES TO AVOID CONFLICTS WITH ADJACENT LINES AND VALVES.
3. NO P-TRAP ON FLOOR DRAINS IN SLUDGE DEWATERING BUILDING (TYP.). SEE HVAC AND PLUMBING DETAIL SHEETS FOR FLOOR DRAIN DETAILS.
4. PIPE LOCATED BENEATH SLABS SHALL BE ENCASED IN CONCRETE. SEE SHEET S-012 FOR DETAIL.
5. LOCATE PIERS AND SUPPORTS; FURNISH AND INSTALL PER MANUFACTURER'S RECOMMENDATIONS AND REQUIREMENTS.
6. PROVIDE CONNECTIONS AS NECESSARY FOR HOSE CONNECTION TO POLYMER TOTE.

COPYRIGHT: ARCADIS U.S., INC. 2016

IF THIS BAR IS NOT 1" INDICATED SCALE IS INCORRECT

NO.	DATE	ISSUED FOR	BY
0	JUL 2019	BIDDING	HG

SEALS

GEORGIA REGISTERED PROFESSIONAL ENGINEER No. PE011536 HAMILTON DAY GILES 07/31/19

ARCADIS BPA A Joint Venture
2839 Paces Ferry Road
Suite 900
Atlanta, GA 30339
Tel: 770-431-8666
Fax: 770-435-2666
www.arcadis-us.com

RESURGENS 1847 ATLANTA, GA. 1865

ATLANTA, GEORGIA
CITY OF ATLANTA
DEPARTMENT OF WATERSHED MANAGEMENT

EAST AREA WATER QUALITY CONTROL FACILITY IMPROVEMENTS

W.01.02.0085

SHEET TITLE

SLUDGE DEWATERING BUILDING SECTIONS AND DETAILS

DATE:	JULY 2019
PROJECT NO.:	GABPA134
DESIGNED BY:	W. HACKETT
DRAWN BY:	J. BROWN
CHECKED BY:	W. GRUBBS

SCALE: AS SHOWN

M-018

SHEET 43 OF 150

User: TTHOMAS Spec: AUS-NCSMOD File: I:\ACAD\PROJ\GABPA134 - CSO GROUP 1\BID PACKAGE 2\SHEETS\MECHANICAL\M-018.DWG Scale: 1:1 SavedDate: 3/8/2019 Time: 11:56 Plot Date: Thomas, Travis; 7/31/2019; 08:33 ; Layout: 43

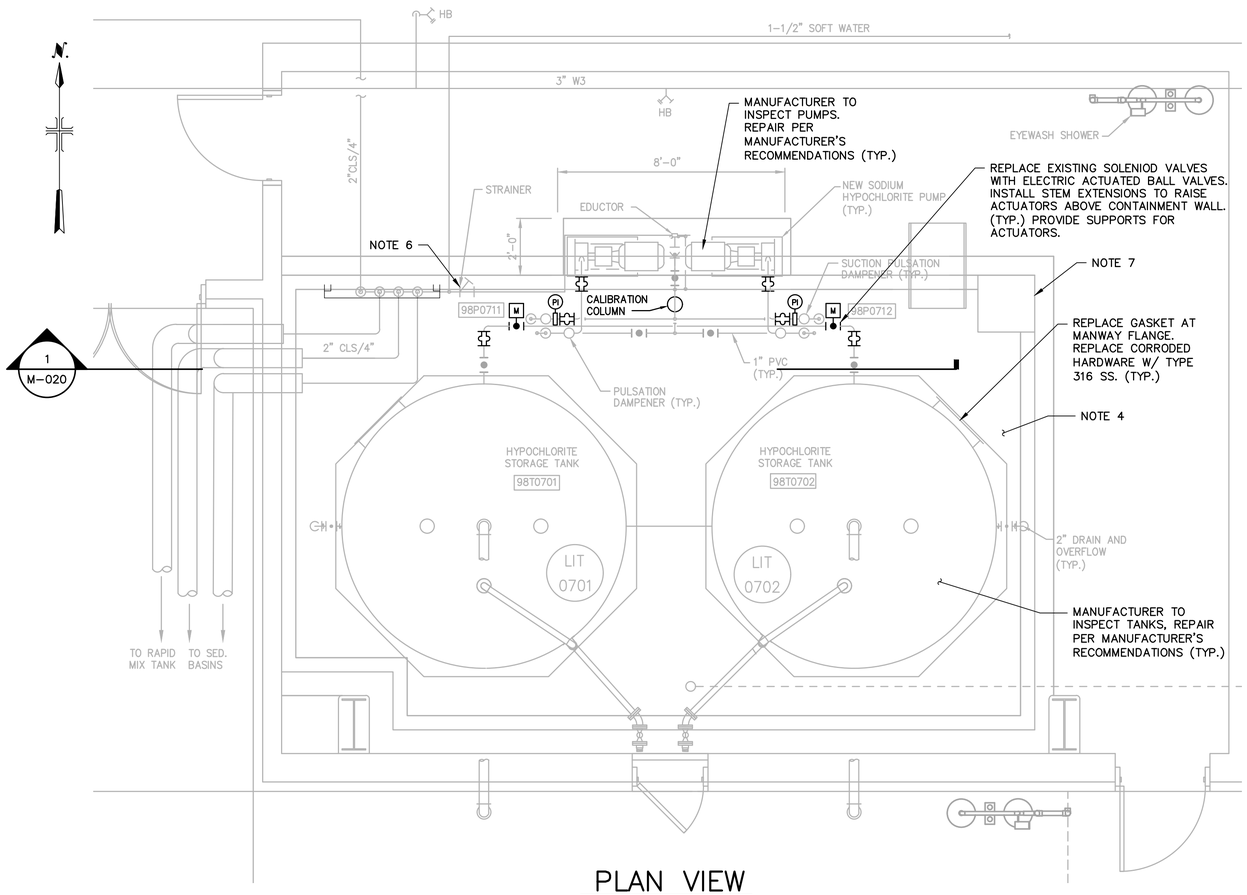

PLAN VIEW

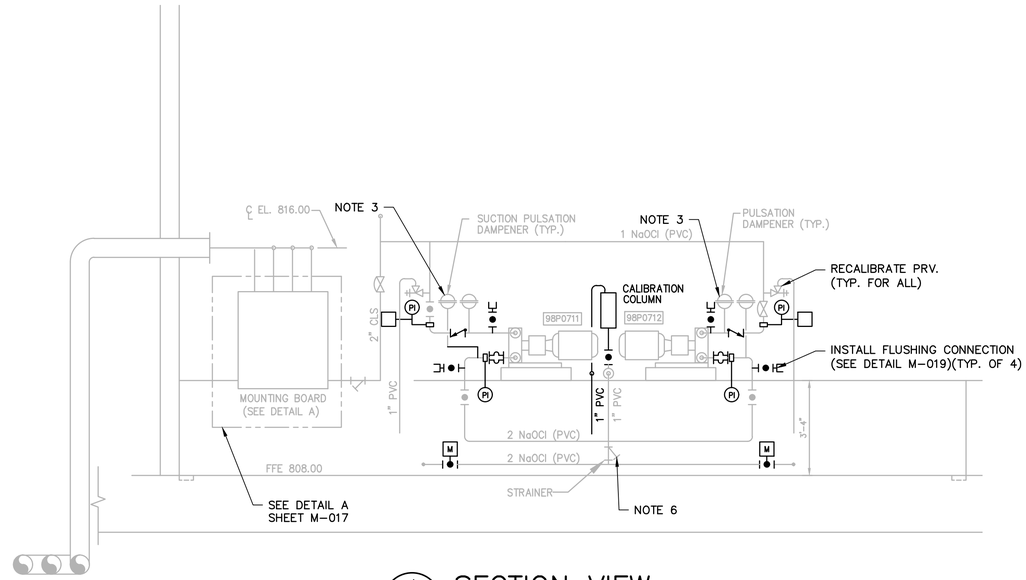

1 M-019 SECTION VIEW

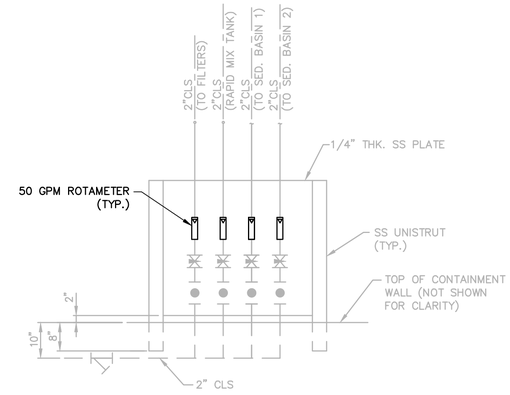

A M-019 DETAIL

NOTES:

1. LOCATIONS OF PIPING AND VALVES ARE APPROXIMATE. CONTRACTOR TO VERIFY PRIOR TO CONSTRUCTION.
2. REPLACE ALL CORRODED HARDWARE WITH TYPE 316SS.
3. REPLACE PRESSURE GAUGE AND SCHRADER FITTINGS. INSPECT DIAPHRAGMS AND REPLACE IF DAMAGED OR DETERIORATED. CHARGE TO RECOMMENDED PRESSURE. TYPICAL FOR ALL PULSATION DAMPENERS AND ACCUMULATORS.
4. REMOVE EXISTING COATING, REPAIR DAMAGED CONCRETE, PREPARE AREA. RECOAT WITH NEW CHEMICAL RESISTANT COATING SYSTEM.
5. PLANT WATER PIPING AND VALVES NOT SHOWN FOR CLARITY. RECERTIFY BACKFLOW PREVENTER. REPLACE SOLENOID VALVE. REPLACE CORRODED STEEL PARTS WITH TYPE 316 STAINLESS STEEL.
6. CLEAN OUT STRAINERS. INSPECT AND REPLACE BROKEN PARTS.
7. INSTALL STEM EXTENSIONS ON CONTAINMENT SUMP VALVE ACTUATOR TO POSITION ACTUATOR HANDLE ABOVE CONTAINMENT WALL. INSPECT CONTAINMENT SUMP ISOLATION VALVE, REPLACE BROKEN COMPONENTS. REPLACE GASKETS AND O-RINGS.
8. PIPE SUPPORTS WITHIN CHEMICAL ROOM SHALL BE FRP. ANCHORS WITHIN CONTAINMENT AREA SHALL BE TITANIUM.
9. CHEMICAL TANK AND PUMP INSPECTION AND REPAIR SHALL BE PAID FROM ALLOWANCE 3.5.
10. INSPECTION AND REPAIR OF EQUIPMENT OTHER THAN CHEMICAL TANKS AND PUMPS SHALL BE PAID OUT OF ALLOWANCE 3.3. CONTRACTOR TO INSPECT AND PROVIDE COST ESTIMATE AND REPORT DESCRIBING NEEDED REPAIRS FOR REVIEW BY CITY.

0 2' 4' 6'

COPYRIGHT: ARCADIS U.S., INC. 2016

IF THIS BAR IS NOT 1" INDICATED SCALE IS INCORRECT

NO.	DATE	ISSUED FOR	BY
0	JUL 2019	BIDDING	HG

SEALS

GEORGIA REGISTERED H. PEVITS JR. PROFESSIONAL ENGINEER HAMILTON DAY GILES 7/31/19

ARCADIS A Joint Venture
BPA
2839 Paces Ferry Road
Suite 900
Atlanta, GA 30339
Tel: 770-431-8666
Fax: 770-435-2666
www.arcadis-us.com

ATLANTA, GEORGIA
CITY OF ATLANTA
DEPARTMENT OF WATERSHED MANAGEMENT

EAST AREA WATER QUALITY CONTROL FACILITY IMPROVEMENTS

W.01.02.0085

SHEET TITLE

EAWQCF SODIUM HYPOCHLORITE SYSTEM PLAN AND SECTIONS

DATE: JULY 2019
PROJECT NO.: GABPA134
DESIGNED BY: H. GIACOMIN
DRAWN BY: J. BROWN
CHECKED BY: W. GRUBBS

SCALE: 3/8" = 1'

M-019

SHEET 44 OF 150

User: THOMAS Spec: AUS-NCSM00 File: I:\ACAD\PROJ\GABPA134 - CSO GROUP 1\BID PACKAGE 2\SHEETS\MECHANICAL\M-019.DWG Scale:1:1 SavedDate:5/31/2019 Time:07:57 Plot Date: Thomas, Travis; 7/31/2019; 08:35 ; Layout:44

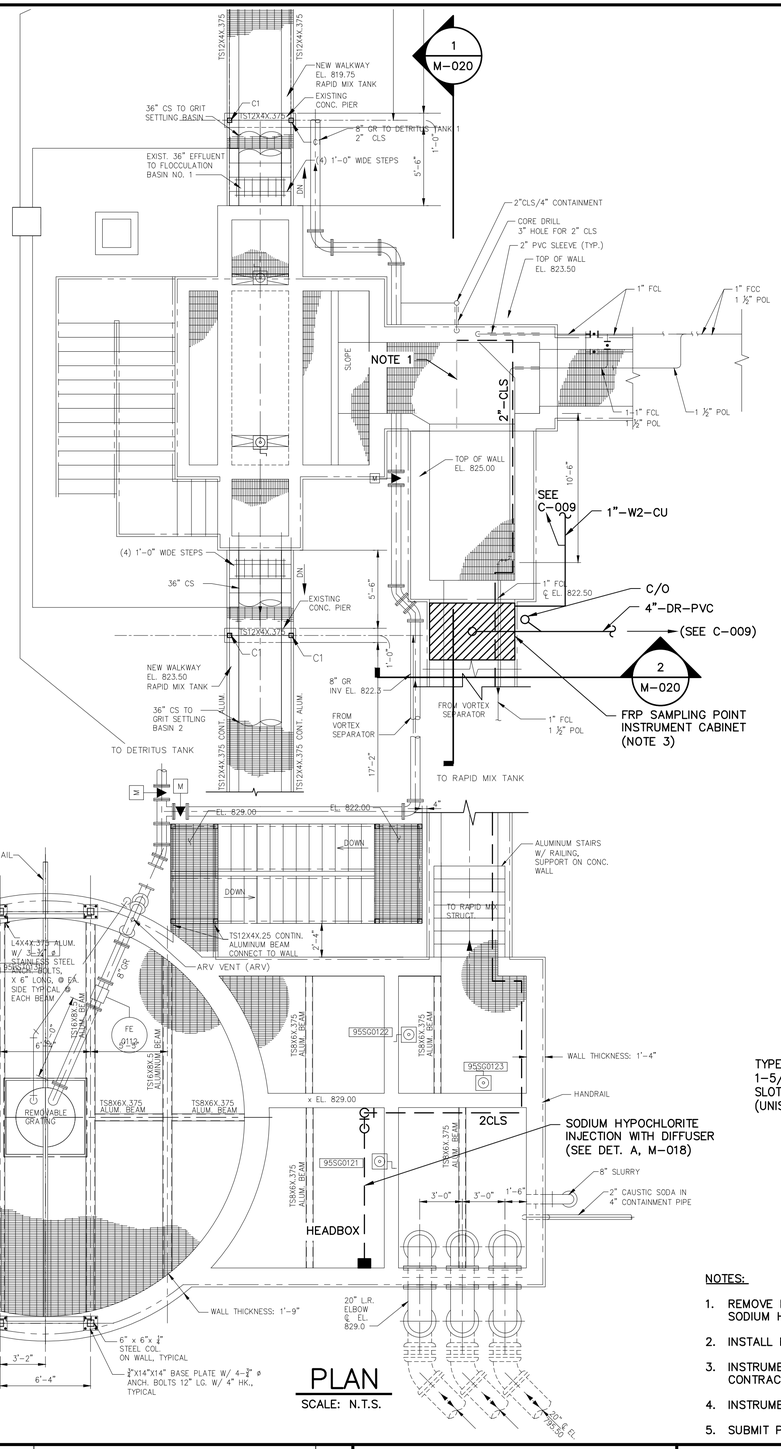

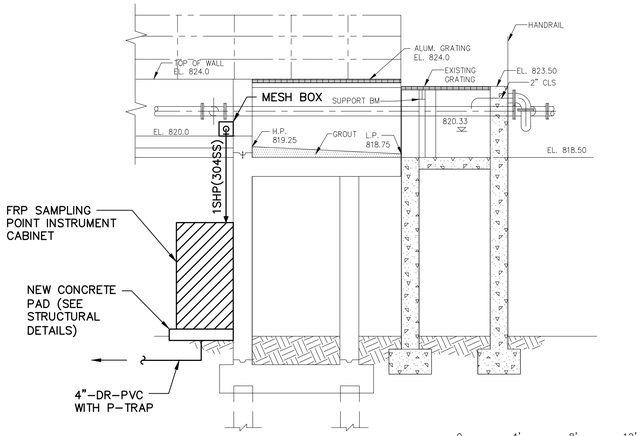

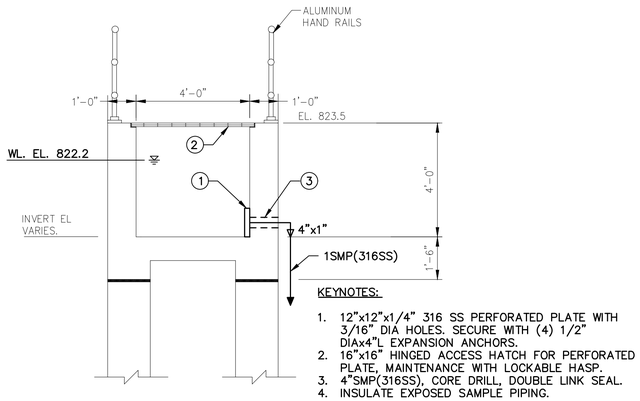

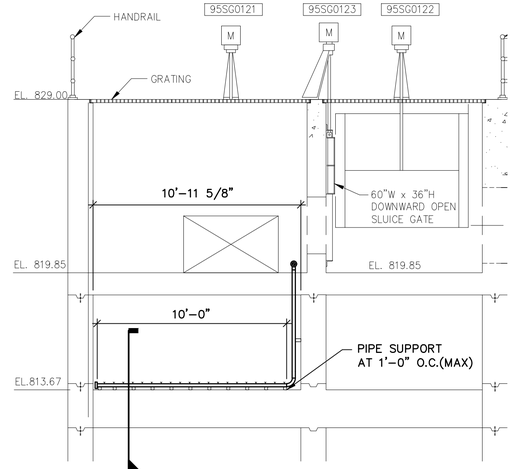

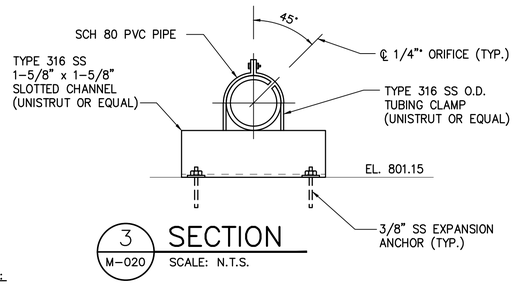

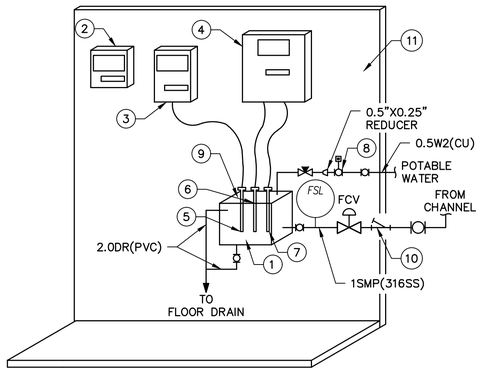

KEYNOTES:

1. POLYPROPYLENE TANK (14"LX8"WX12"H). DISCHARGE EL. 9".
2. UPS PANEL
3. TOTAL CHLORINE TRANSMITTER.
4. DISSOLVED OXYGEN AND pH TRANSMITTER.
5. TOTAL CHLORINE PROBE.
6. DISSOLVED OXYGEN PROBE.
7. pH PROBE.
8. MOTORIZED BALL VALVE.
9. TANK SLIDING COVER W/ NOTHCES FOR PROBES. CONTRACTOR TO SUBMIT DRAWING PRIOR TO FABRICATION.
10. Y-STRAINER WITH 3/16" MESH.
11. SS INSTRUMENT RACK/SKID

B M-020 INSTRUMENT TANK SCHEMATIC
SCALE: N.T.S.

NOTES:

1. REMOVE EXISTING DIFFUSER PIPE (LOCATION SHOWN IS APPROXIMATE). CONNECT NEW 2" CLS PIPE TO CONVEY SODIUM HYPOCHLORITE TO HEADBOX.
2. INSTALL NEW 2" CLS PIPE PARALLEL TO EXISTING 1" FCL AND 1 1/2" POL LINES.
3. INSTRUMENT CABINET TO BE INSTALLED UNDER OVERHEAD CHANNEL. REFER TO SPECIFICATION SECTION 12680. CONTRACTOR TO POUR CONCRETE SLAB FOR INSTRUMENT CABINET PER STRUCTURAL DETAILS.
4. INSTRUMENTS, ELECTRICAL AND SAMPLE TANK SHALL BE MOUNTED ON STAINLESS STEEL MOUNTING RACK.
5. SUBMIT PLAN OF INSTRUMENT CABINET FOR APPROVAL.

REFERENCE DRAWINGS: S-14, M-14, M-15, M-16, M-17 (2008, CITY OF ATLANTA INTRENCHMENT CREEK CSO TREATMENT PLANT

COPYRIGHT: ARCADIS U.S., INC. 2016

IF THIS BAR IS NOT 1" INDICATED SCALE IS INCORRECT

NO.	DATE	ISSUED FOR	BY
0	JUL 2019	BIDDING	HG

SEALS

GEORGIA REGISTERED PROFESSIONAL ENGINEER HAMILTON DAY GILES 07/31/19

ARCADIS A Joint Venture
BPA
2839 Paces Ferry Road
Suite 900
Atlanta, GA 30339
Tel: 770-431-8666
Fax: 770-435-2666
www.arcadis-us.com

ATLANTA, GEORGIA
CITY OF ATLANTA
DEPARTMENT OF WATERSHED MANAGEMENT

EAST AREA WATER QUALITY CONTROL FACILITY IMPROVEMENTS

W.01.02.0085

SHEET TITLE

SODIUM HYPOCHLORITE DOSING AND SAMPLING POINT

DATE:	JULY 2019
PROJECT NO.:	GABPA134
DESIGNED BY:	M. BRONSTEIN
DRAWN BY:	J. BROWN
CHECKED BY:	W. GRUBBS

SCALE: AS SHOWN

M-020

SHEET 45 OF 150

User:THOMAS Spec:AUS-NCSMOD File:I:\ACAD\PROJ\GABPA134 - CSO GROUP 1\BID PACKAGE 2\SHEETS\MECHANICAL\M-020.DWG Scale:1:1 SavedDate:6/3/2019 Time:09:51 Plot Date: Thomas, Travis; 7/31/2019; 08:38 ; Layout:45

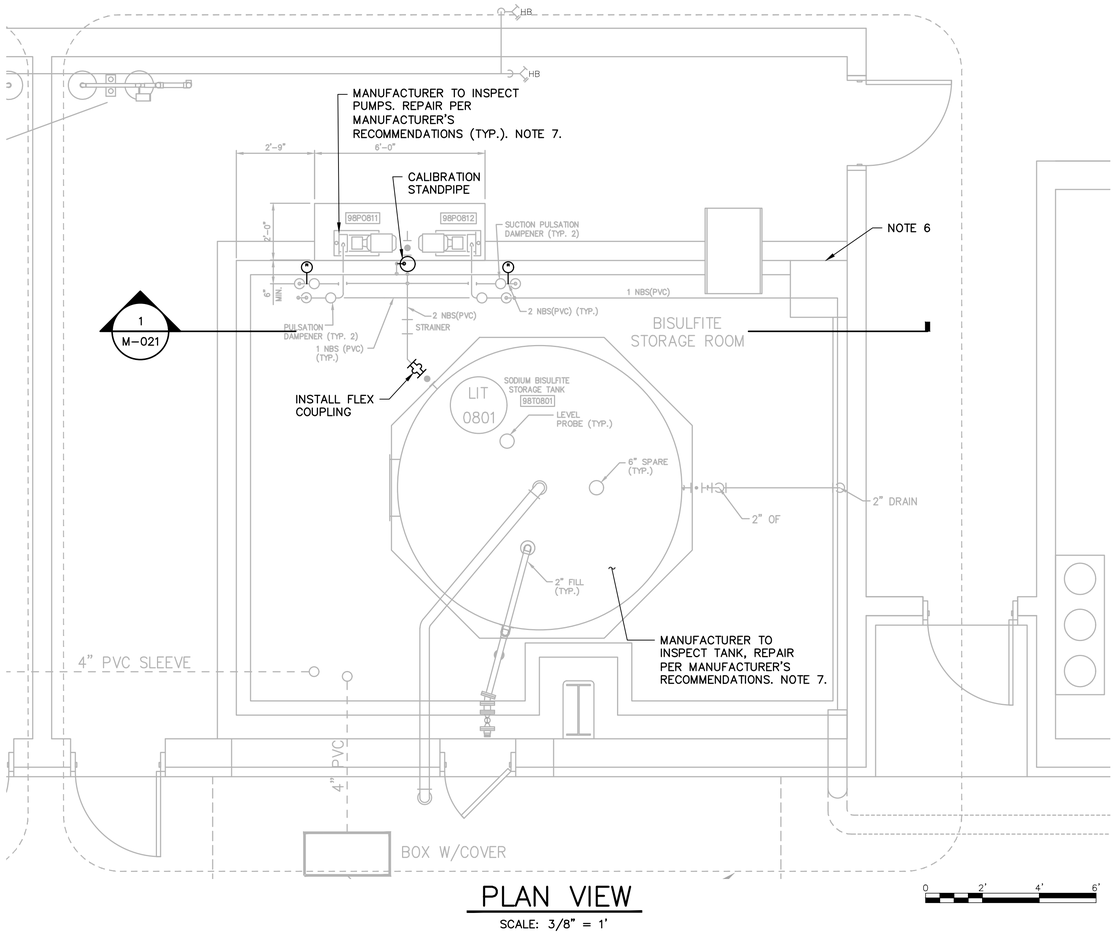

PLAN VIEW

SCALE: 3/8" = 1'

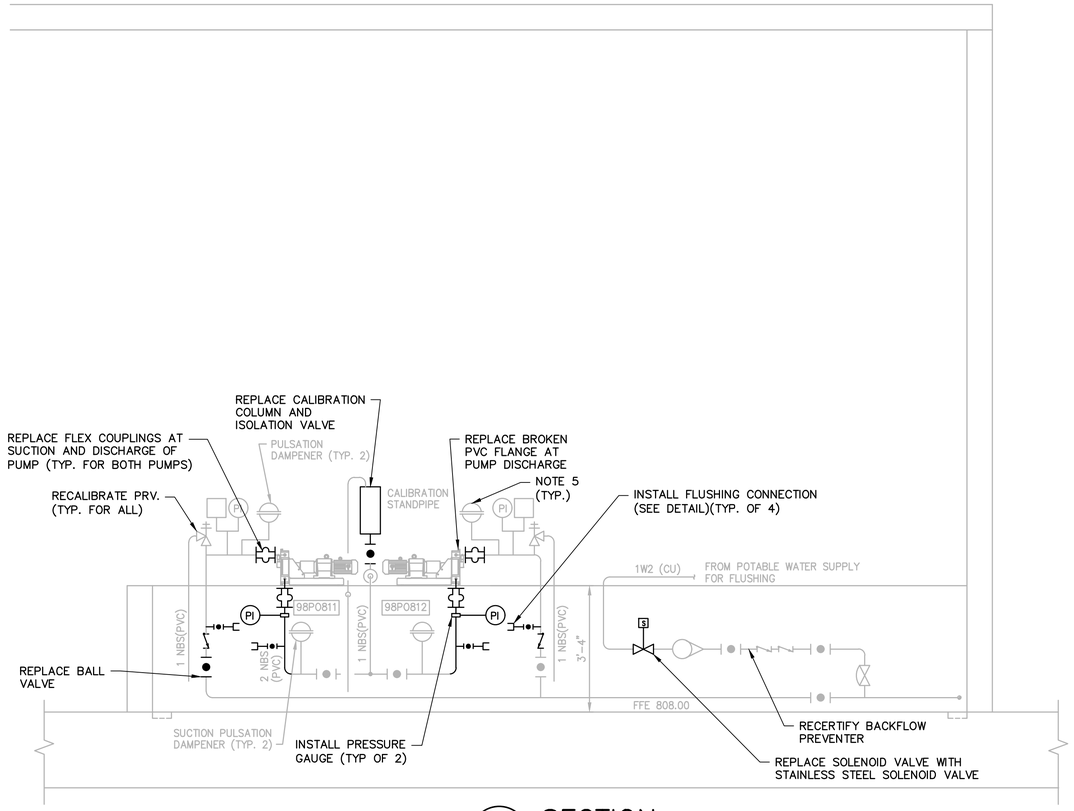

1/M-021 SECTION

SCALE: N.T.S.

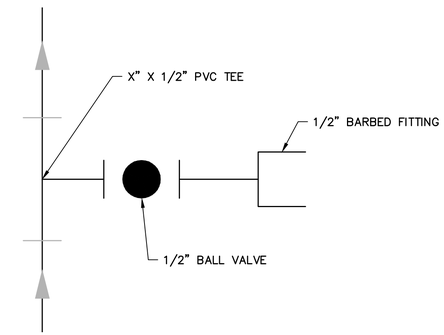

FLUSHING CONNECTION DETAIL

NOTES:

1. LOCATION OF PIPING AND VALVES ARE APPROXIMATE. CONTRACTOR TO VERIFY IN FIELD PRIOR TO CONSTRUCTION.
2. REPLACE ALL METALLIC, NON-SS PIPE SUPPORTS/STRAPS WITH TYPE 316 SS MATERIALS.
3. REPLACE ALL CORRODED HARDWARE WITH TYPE 316 STAINLESS STEEL.
4. INSPECT ALL VALVES, EQUIPMENT, AND PIPING. REPLACE ALL BROKEN OR CRACKED COMPONENTS.
5. REPLACE PRESSURE GAUGE AND SCHRADER FITTINGS. INSPECT DIAPHRAGMS AND REPLACE IF DAMAGED OR DETERIORATED. TYPICAL FOR ALL PULSATION DAMPENERS AND ACCUMULATORS.
6. INSTALL STEM EXTENSIONS ON CONTAINMENT SUMP VALVE ACTUATOR TO POSITION ACTUATOR HANDLE ABOVE CONTAINMENT WALL.
7. CHEMICAL TANK AND PUMP INSPECTION AND REPAIR SHALL BE PAID FROM ALLOWANCE 3.6.
8. INSPECTION AND REPAIR OF EQUIPMENT OTHER THAN CHEMICAL TANKS AND PUMPS SHALL BE PAID OUT OF ALLOWANCE 3.3. CONTRACTOR TO INSPECT AND PROVIDE COST ESTIMATE AND REPORT DESCRIBING NEEDED REPAIRS FOR REVIEW BY CITY.

COPYRIGHT: ARCADIS U.S., INC. 2016

IF THIS BAR IS NOT 1" INDICATED SCALE IS INCORRECT

NO.	DATE	ISSUED FOR	BY
0	JUL 2019	BIDDING	HG

SEALS

GEORGIA REGISTERED PROFESSIONAL ENGINEER HAMILTON DAY GILES 07/31/19

ARCADIS A Joint Venture
BPA
2839 Paces Ferry Road
Suite 900
Atlanta, GA 30339
Tel: 770-431-8666
Fax: 770-435-2666
www.arcadis-us.com

RESURGENS ATLANTA, GA. 1854

ATLANTA, GEORGIA
CITY OF ATLANTA
DEPARTMENT OF WATERSHED MANAGEMENT

EAST AREA WATER QUALITY CONTROL FACILITY IMPROVEMENTS

W.01.02.0085

SHEET TITLE

EAWQCF - SODIUM BISULFITE ROOM

DATE:	JULY 2019
PROJECT NO.:	GABPA134
DESIGNED BY:	H. GIACOMIN
DRAWN BY:	J. BROWN
CHECKED BY:	W. GRUBBS

SCALE: AS SHOWN

M-021

SHEET 46 OF 150

User:TTHOMAS Spec:AUS-NCSMOD File:I:\ACAD\PROJ\GABPA134 - CSO GROUP 1\BID PACKAGE 2\SHEETS\MECHANICAL\M-021.DWG Scale:1:1 SavedDate:5/31/2019 Time:08:21 Plot Date: Thomas, Travis: 7/31/2019; 08:39 ; Layout:46

NOTES:

1. LOCATION OF PIPING AND VALVES ARE APPROXIMATE. CONTRACTOR TO VERIFY IN FIELD PRIOR TO CONSTRUCTION.
2. REPLACE ALL CORRODED HARDWARE WITH TYPE 316 STAINLESS STEEL.
3. INSPECT ALL VALVES, PIPING, AND EQUIPMENT, AND REPLACE ALL BROKEN OR CRACKED COMPONENTS.
4. REPLACE COMMON 4–INCH VENT LINE WITH INDIVIDUAL 6–INCH VENT LINES FOR EACH TANK. ADD OR ENLARGE ROOF OPENINGS AS NECESSARY. ADD VENT STACK ACCORDING TO DETAIL. CONTRACTOR AND PERSONNEL ARE NOT PERMITTED TO STAND OR SIT ON TOP OF TANKS DURING VENT INSTALLATION.
5. REPLACE PRESSURE CONTROL VALVE AND UNION AT INLET AND DISCHARGE.
6. REPLACE NIPPLE BETWEEN BALL VALVE AND DIAPHRAGM SEAL WITH STAINLESS STEEL.
7. REPAIR LEAKING BONNET.
8. MANUFACTURER TO INSPECT PUMP. REPAIR PER MANUFACTURER'S RECOMMENDATIONS. INSPECTION AND REPAIR SHALL BE PAID FROM ALLOWANCE 3.9.
9. CLEAN AND REMOVE CHEMICAL RESIDUE FROM CONTAINMENT AREA.
10. MANUFACTURER TO INSPECT TANKS. REPAIR PER MANUFACTURER'S RECOMMENDATIONS. INSPECTION AND REPAIR SHALL BE PAID FROM ALLOWANCE 3.9.
11. DISCONNECT EXISTING WIRING FOR SV1101 AND SV1201. RECONNECT TO NEW SV1101 AND SV1201 USING EXISTING WIRING
12. INSPECTION AND REPAIR OF EQUIPMENT OTHER THAN CHEMICAL TANKS AND PUMPS SHALL BE PAID OUT OF ALLOWANCE 3.3. CONTRACTOR TO INSPECT AND PROVIDE COST ESTIMATE AND REPORT DESCRIBING NEEDED REPAIRS FOR REVIEW BY CITY.

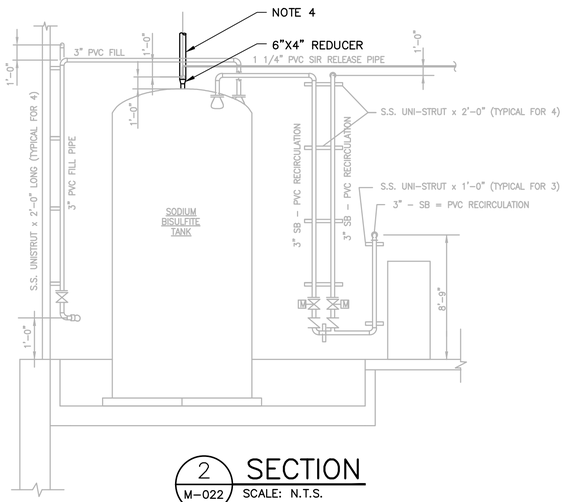

2 / M-022 SECTION
SCALE: N.T.S.

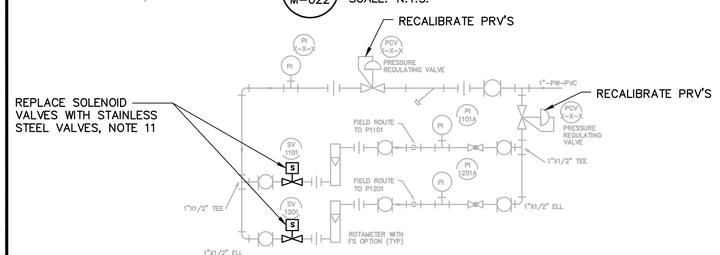

DETAIL – SEAL WATER

SCALE: N.T.S.

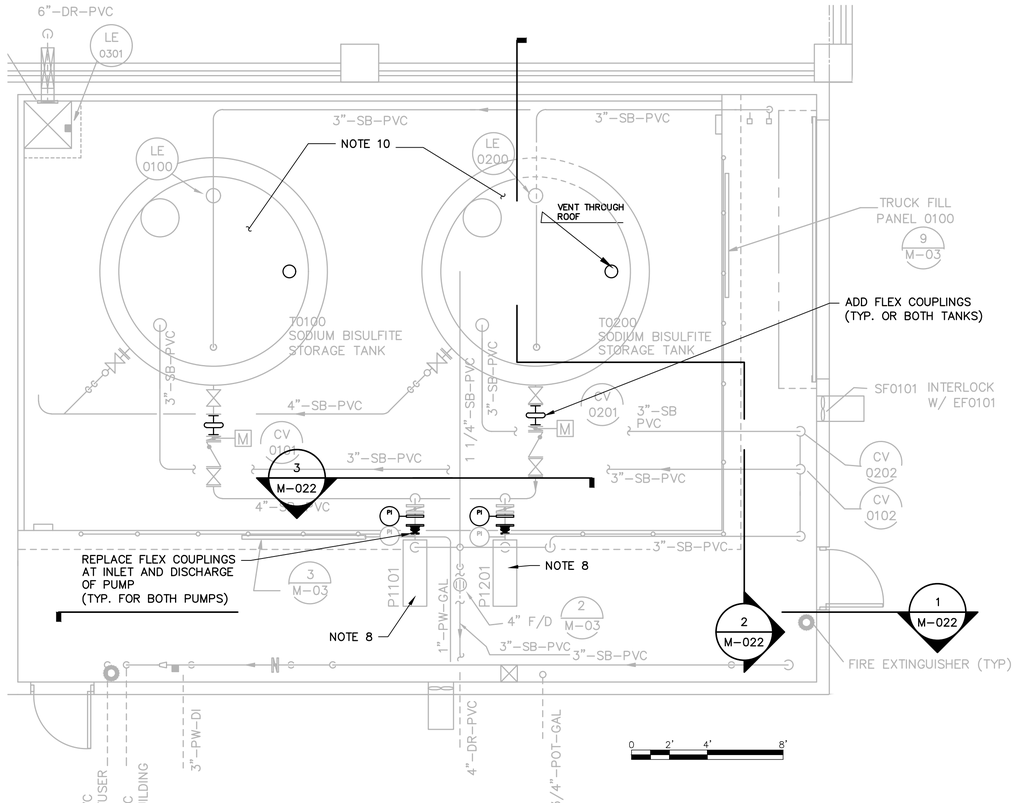

DECHLORINATION ROOM – PLAN

SCALE: 1/4" = 1'

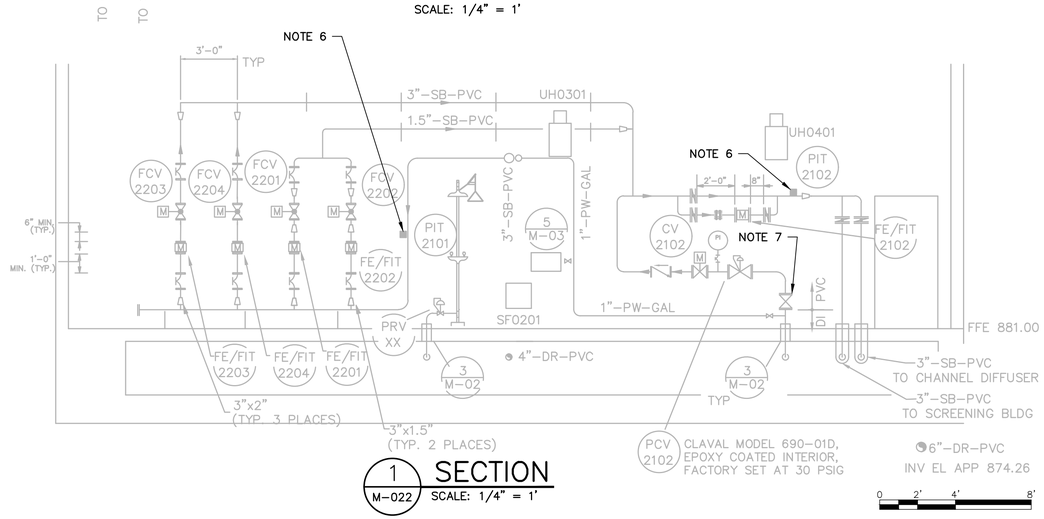

1 / M-022 SECTION
SCALE: 1/4" = 1'

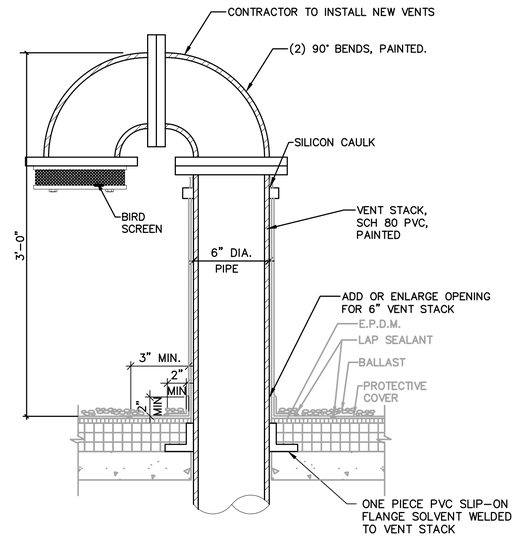

DETAIL – VENT STACK

SCALE: N.T.S.

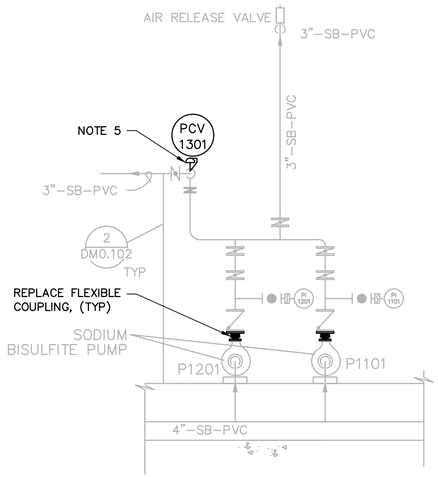

3 / M-022 SECTION
SCALE: 1/4" = 1'

COPYRIGHT: ARCADIS U.S., INC. 2016

IF THIS BAR IS NOT 1" INDICATED SCALE IS INCORRECT

NO.	DATE	ISSUED FOR	BY
0	JUL 2019	BIDDING	HG

SEALS

GEORGIA REGISTERED PROFESSIONAL ENGINEER HAMILTON DAY GILES 7/31/19

ARCADIS
BPA
A Joint Venture
2839 Paces Ferry Road
Suite 900
Atlanta, GA 30339
Tel: 770-431-8666
Fax: 770-435-2666
www.arcadis-us.com

ATLANTA, GEORGIA
CITY OF ATLANTA
DEPARTMENT OF WATERSHED MANAGEMENT

EAST AREA WATER QUALITY CONTROL FACILITY IMPROVEMENTS

W.01.02.0085

SHEET TITLE

CUSTER AVENUE – SODIUM BISULFITE SYSTEM PLAN AND SECTIONS

DATE:	JULY 2019
PROJECT NO.:	GABPA134
DESIGNED BY:	H. GIACOMIN
DRAWN BY:	J. BROWN
CHECKED BY:	W. GRUBBS

SCALE: AS SHOWN

M-022

SHEET 47 OF 150

User:TTHOMAS Spec: AUS-NCSMOD File:I:\ACAD\PROJ\GABPA134 – CSO GROUP 1\BID PACKAGE 2\SHEETS\MECHANICAL\M-022.DWG Scale:1:1 SavedDate:5/31/2019 Time:08:28 Plot Date: Thomas, Travis; 7/31/2019; 08:40 ; Layout:47

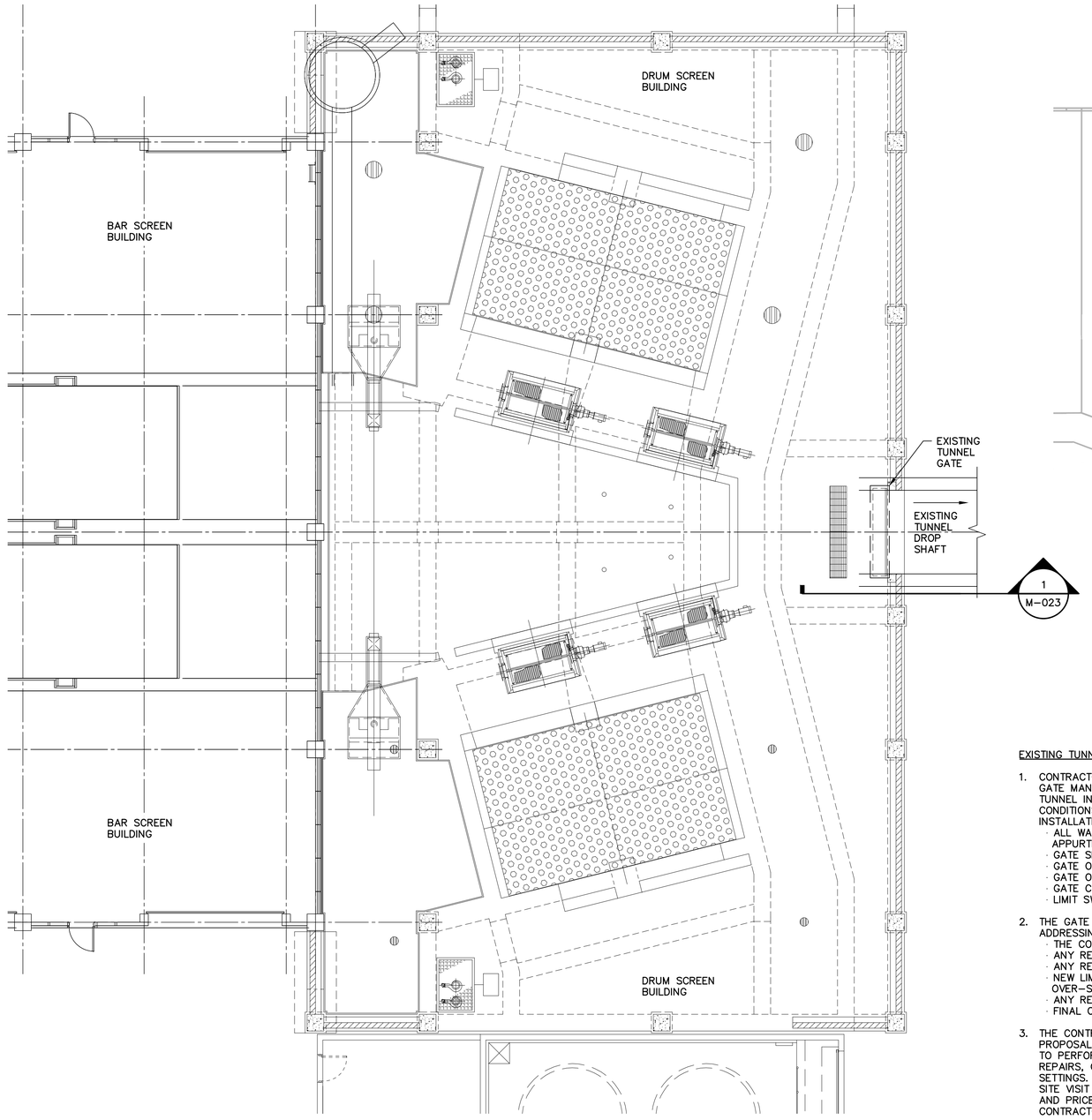

PLAN VIEW

SCALE: 1/8" = 1'-0"

0 4' 8' 16'

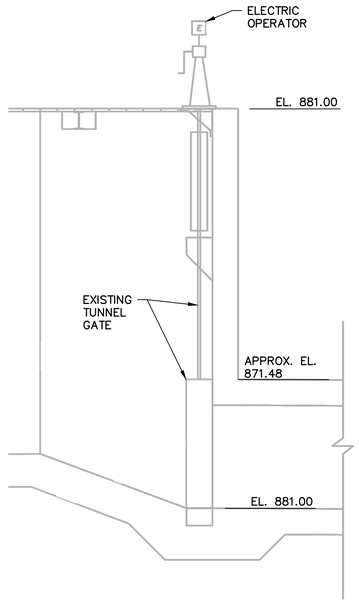

1 M-023 SECTION

SCALE: N.T.S.

EXISTING TUNNEL GATE REPAIR:

1. CONTRACTOR SHALL ARRANGE FOR A SITE VISIT BY THE TUNNEL GATE MANUFACTURER (RODNEY-HUNT) TO INSPECT THE EXISTING TUNNEL INLET GATE AT CUSTER AVENUE CSCF, TO ASSESS THE CONDITIONS AND STRUCTURAL INTEGRITY OF THE EXISTING GATE INSTALLATION, INCLUDING BUT NOT LIMITED TO:
   - ALL WALL MOUNTING(S) AND OTHER GATE ANCHORAGE APPURTENANCES.
   - GATE SEATS
   - GATE OPERATOR
   - GATE OPERATOR SUPPORT
   - GATE CONTROL SYSTEM
   - LIMIT SWITCH SETTINGS
2. THE GATE MANUFACTURER SHALL PREPARE A WRITTEN REPORT ADDRESSING:
   - THE CONDITION OF THE GATE AND OPERATOR
   - ANY RECOMMENDED GATE/OPERATOR REPAIRS
   - ANY RECOMMENDED CONCRETE REPAIRS
   - NEW LIMIT SWITCH SETTINGS TO PREVENT OVER-STRESSING THE GATE ASSEMBLY
   - ANY RECOMMENDED ELECTRICAL/CONTROL REPAIRS
   - FINAL COATING/PAINTING REPAIRS
3. THE CONTRACTOR SHALL SUBMIT TO THE ENGINEER AND CITY A PROPOSAL TO PROVIDE ALL LABOR, MATERIALS AND EQUIPMENT TO PERFORM ANY RECOMMENDED GATE REPAIRS, CONCRETE REPAIRS, OPERATOR REPAIRS AND ADJUSTMENT OF LIMIT SWITCH SETTINGS. THE PROPOSAL SHALL INCLUDE THE COST OF THE SITE VISIT AND GATE ASSESSMENT REPORT, RECOMMENDATIONS AND PRICE DEVELOPMENT BY THE GATE MANUFACTURER AND THE CONTRACTOR'S OVERHEAD AND PROFIT.
4. UPON APPROVAL FROM THE CITY, CONTRACTOR SHALL PROCEED WITH THE TUNNEL GATE REPAIRS.
5. NO REPAIR WORK SHALL BEGIN WITHOUT WRITTEN DIRECTION FROM THE CITY TO DO SO.

REFERENCE DRAWINGS: 008-M-01 (2009, CUSTER AVENUE CSO STORAGE AND DECHLORINATION FACILITY), 4-M-3 (2001, EAST AREA CSO IMPROVEMENTS)

EXISTING TUNNEL GATE PHOTOS

COPYRIGHT: ARCADIS U.S., INC. 2016

IF THIS BAR IS NOT 1" INDICATED SCALE IS INCORRECT

NO.	DATE	ISSUED FOR	BY
0	JUL 2019	BIDDING	HG

SEALS

GEORGIA REGISTERED P. PE017536 PROFESSIONAL ENGINEER HAMILTON DAY GILES

ARCADIS A Joint Venture
BPA
2839 Paces Ferry Road
Suite 900
Atlanta, GA 30339
Tel: 770-431-8666
Fax: 770-435-2666
www.arcadis-us.com

ATLANTA, GEORGIA
CITY OF ATLANTA
DEPARTMENT OF WATERSHED MANAGEMENT

EAST AREA WATER QUALITY CONTROL FACILITY IMPROVEMENTS

W.01.02.0085

SHEET TITLE

CUSTER AVENUE TUNNEL GATE REPAIR

DATE:	JULY 2019
PROJECT NO.:	GABPA134
DESIGNED BY:	M. BRONSTEIN
DRAWN BY:	J. BROWN
CHECKED BY:	W. GRUBBS

SCALE: AS SHOWN

M-023

SHEET 48 OF 150

User: TTHOMAS Spec: AUS-NCSM0D File: I:\ACAD\PROJ\GABPA134 - CSO GROUP 1\BID PACKAGE 2\SHEETS\MECHANICAL\M-023.DWG Scale: 1:1 SavedDate: 8/3/2018 Time: 13:25 Plot Date: Thomas, Travis; 7/31/2019; 08:42 ; Layout: 48

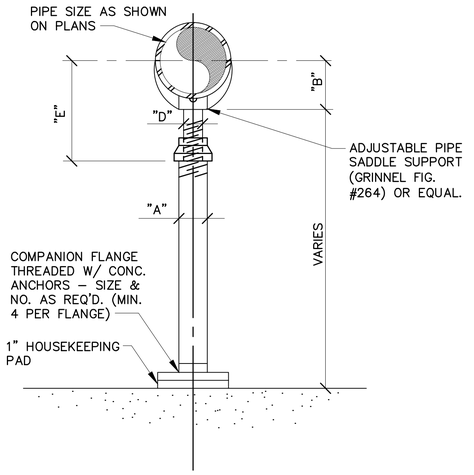

SCHEDULE OF DIMENSIONS					
PIPE SIZE	A	B	D	E	
				MIN.	MAX.
2 1/2	2 1/2	3 /12	1 1/2	8	13
3	2 1/2	3 3/4	1 1/2	8 1/4	13 1/4
3 1/2	2 1/2	4	1 1/2	8 1/2	13 1/2
4	3	4 1/4	2 1/2	9 1/4	14
5	3	4 7/8	2 1/2	10	14 3/4
6	3	5 1/2	2 1/2	10 1/2	15 1/4
8	3	6 3/8	2 1/2	11 3/4	16 1/2
10	3	8 1/2	2 1/2	13 1/2	18 1/4
12	3	9 15/16	2 1/2	15	19 3/4
14	4	10 15/16	3	16 1/4	20 3/4
16	4	12 3/8	3	17 3/4	22 1/4
18	6	13 7/8	3 1/2	19 1/2	24

ADJUSTABLE SADDLE PIPE SUPPORT DETAIL

SCALE: N.T.S.

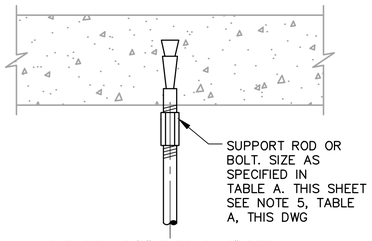

CAPACITY: 3/8" THROUGH 6" PIPE
MAXIMUM ALLOWABLE LOAD:

ROD SIZE	LOAD
3/8"	610 lbs.
1/2"	1130 lbs.
5/8"–7/8"	1140 lbs.

SPACING SHALL BE AS REQUIRED BUT SHALL NOT EXCEED THOSE SPANS SHOWN IN TABLE A THIS SHEET.

DETAIL – ANCHOR

SCALE: N.T.S.

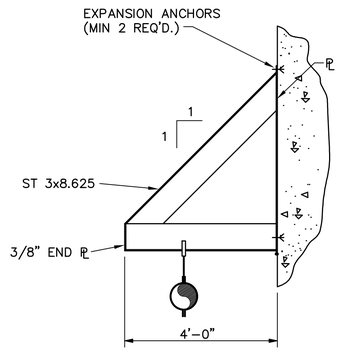

TYPE "A" HANGER BRACKET

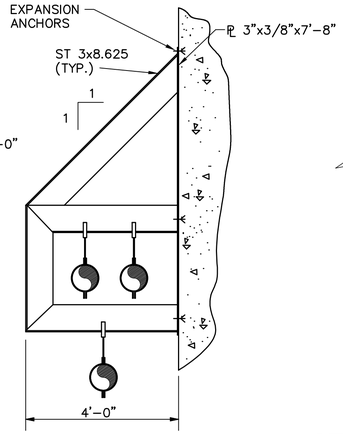

TYPE "B" HANGER BRACKET

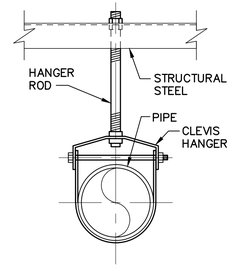

STEEL MOUNTED CLEVIS HANGER PIPE SUPPORT DETAIL

SCALE: N.T.S.

DETAIL – PIPE HANGER

SCALE: N.T.S.

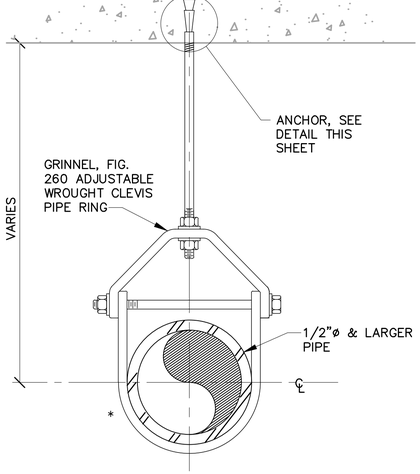

ADJUSTABLE CLEVIS PIPE SUPPORT DETAIL

SCALE: N.T.S.

TABLE A								
NOMINAL PIPE SIZE (INCHES)	SUPPORT ROD SIZE AND MAX. LOAD PER ROD SEE NOTE 2 AND 3				MAXIMUM PIPE SPAN (FEET)			
	SINGLE ROD SUPPORT SYSTEM		TWO ROD SUPPORT SYSTEM		STEEL SEE NOTE 3	FIBERGLASS	PVC SEE NOTE 4	DUCTILE IRON SEE NOTE 6
	ROD SIZE (INCHES)	MAX. LOAD (POUNDS)	ROD SIZE (INCHES)	MAX. LOAD (POUNDS)				
3/8–3/4	3/8	610	3/8	610	5	---	CONTINUOUS	---
1	3/8	610	3/8	610	7	---	3.8	---
1 1/4	3/8	610	3/8	610	7	---	4	---
1 1/2	3/8	610	3/8	610	9	3.75	4	---
2	3/8	610	3/8	610	10	4.75	4.33	12 FEET FOR PRESSURE PIPE 10 FEET FOR SOIL PIPE
2 1/2	3/8	610	3/8	610	11	5.75	4.75	
3	3/8	610	3/8	610	12	7	5	
4	1/2	1130	3/8	610	14	9	5.25	
6	5/8	1810	1/2	1130	17	12	6	
8	3/4	2710	1/2(5/8)	1130(1810)	19	11	12	
10	3/4(1)	2710(4960)	5/8(3/4)	1810(2710)	22	12	12	
12	7/8 (1 1/4)	3770(8000)	3/4(7/8)	2710(3770)	23	---	---	

NOTES:

1. DESIGN WEIGHT SHALL BE TWICE THE WEIGHT OF THE PIPE FULL OF WATER. HANGER SYSTEMS SHALL BE DESIGNED USING THIS DESIGN SHEET, SPECIFICATIONS OR MANUFACTURERS STANDARDS WHICHEVER ARE THE MOST STRINGENT.
2. ROD SIZES SHOWN ARE FOR THE SUPPORT OF A SINGLE PIPE. WHEN SUPPORTING MORE THAN ONE PIPE, ROD SHALL BE SIZED USING THE DESIGN WEIGHTS (SEE NOTE 1) TO DETERMINE THE TOTAL DESIGN LOAD. THE TOTAL DESIGN LOAD SHALL NOT EXCEED THE MAXIMUM LOADS SHOWN IN THE TABLE ABOVE.
3. ROD SIZES AND MAXIMUM LOADS IN PARENTHESIS ARE FOR 8", 10", OR 12" STEEL PIPE ONLY, AT SPANS SHOWN
4. SPAN SHOWN IS FOR SCHEDULE 80 PVC PIPE AT 100°F. SPANS FOR OTHER PLASTICS, OTHER PVC PIPE SCHEDULES AND PIPES AT HIGHER TEMPERATURES SHALL BE SHORTENED IN ACCORDANCE WITH THE PIPE MANUFACTURER'S RECOMMENDATIONS. "CONTINUOUS" MEANS PIPE SHALL BE IN UNISTRUT OR SIMILAR CHANNEL.
5. FOR PIPES SUBJECT TO LONGITUDINAL MOVEMENT, OR HAVING SERVICE TEMPERATURES IN RANGES OF 33°F TO 59°F OR 120°F TO 450°F.
6. PROVIDE A MINIMUM OF ONE PIPE HANGER PER PIPE LENGTH, WITHIN 4–INCHES OF THE BELL OR FLANGE OF THE PIPE.

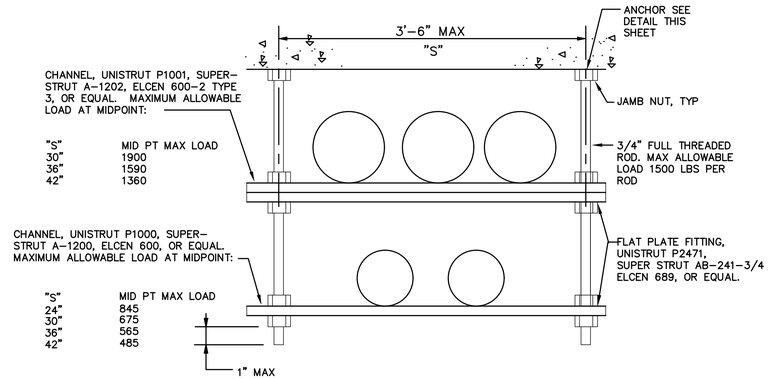

TRAPEZE NOTES:

1. SPACING SHALL BE AS SPECIFIED IN TABLE A. SEE NOTE 2.
2. MAXIMUM DESIGN WEIGHTS SHALL BE AS FOLLOWS:
   3/8" TO 1 1/4" PIPE – 100% OF DESIGN WEIGHT. TABLE A.
   1 1/2" TO 12" PIPE – 50% OF DESIGN WEIGHT. TABLE A.
3. TOTAL LOADS ON END CONNECTIONS SHALL NOT EXCEED 1/2 THE MAXIMUM ALLOWABLE LOAD AT MID–POINT.
4. VERTICAL SPACING SHALL BE AS REQUIRED.

TRAPEZE SUPPORT DETAIL

SCALE: N.T.S.

COPYRIGHT:
ARCADIS U.S., INC.
2016

IF THIS BAR IS NOT 1" INDICATED SCALE IS INCORRECT

NO.	DATE	ISSUED FOR	BY
0	JUL 2019	BIDDING	HG

SEALS

GEORGIA REGISTERED P.E. 031536 PROFESSIONAL ENGINEER HAMILTON DAY GILES

ARCADIS
BPA
A Joint Venture
2839 Paces Ferry Road
Suite 900
Atlanta, GA 30339
Tel: 770–431–8666
Fax: 770–435–2666
www.arcadis–us.com

ATLANTA, GEORGIA
CITY OF ATLANTA
DEPARTMENT OF WATERSHED MANAGEMENT

EAST AREA WATER QUALITY CONTROL FACILITY IMPROVEMENTS

W.01.02.0085

SHEET TITLE

STANDARD MECHANICAL DETAILS 1

DATE:	JULY 2019
PROJECT NO.:	GABPA134
DESIGNED BY:	M. BRONSTEIN
DRAWN BY:	R. KUNZ
CHECKED BY:	W. GRUBBS

SCALE: NONE

M–024

SHEET 49 OF 150

User: TTHOMAS Spec: AUS–NCSMOD File: I:\ACAD\PRO\GABPA134 – CSO GROUP 1\BID PACKAGE 2\SHEETS\MECHANICAL\M–024.DWG Scale: 1:1 SavedDate: 8/3/2018 Time: 13:26 Plot Date: Thomas, Travis; 7/31/2019; 08:44 ; Layout: 49

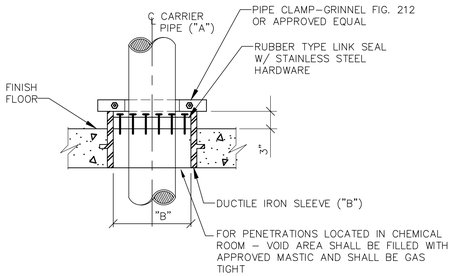

DETAIL – FLOOR PENETRATION

SCALE: N.T.S.

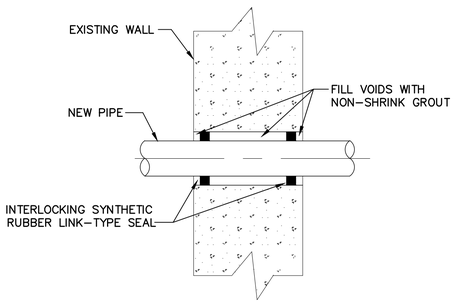

TYPICAL WALL PENETRATION DETAIL (EXISTING WALL)

SCALE: N.T.S.

NOTES:
1. TYPICAL FOR PIPES 3" AND LARGER THROUGH EXISTING CONCRETE WALLS
2. HARDWARE SHALL BE TYEP 316 SS

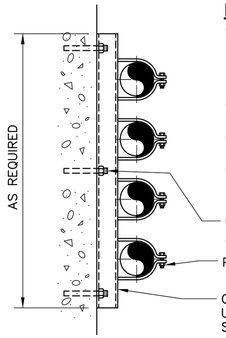

NOTES:
1. PROVIDE GRINNELL POWER STRUT PS 1400, UNISTRUT, OR EQUAL PIPE CLAMP WITH THERMOPLASTIC RUBBER CUSHION ON COPPER AND PVC PIPES.
2. THIS DETAIL MAY BE USED FOR SINGLE PIPES. PROVIDE A MINIMUM OF 2 CONCRETE ANCHORS.
3. ALL MATERIALS SHALL BE TYPE 316 SS.
4. PROVIDE 1/4" MIN THICK NEOPRENE RING FOR ELECTRICAL ISOLATION BETWEEN PIPE AND SUPPORT FOR METALLIC PIPE.

WALL TYPE PIPE SUPPORT

SCALE: N.T.S.

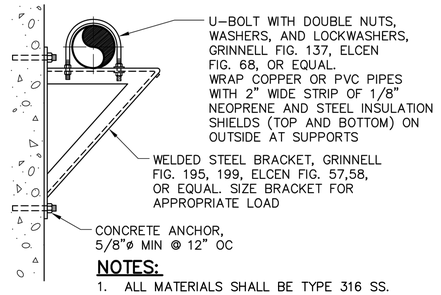

NOTES:
1. ALL MATERIALS SHALL BE TYPE 316 SS.
2. PROVIDE 1/4" MIN THICK NEOPRENE RING FOR ELECTRICAL ISOLATION BETWEEN PIPE AND SUPPORT FOR METALLIC PIPE.

PIPE BRACKET

SCALE: N.T.S.

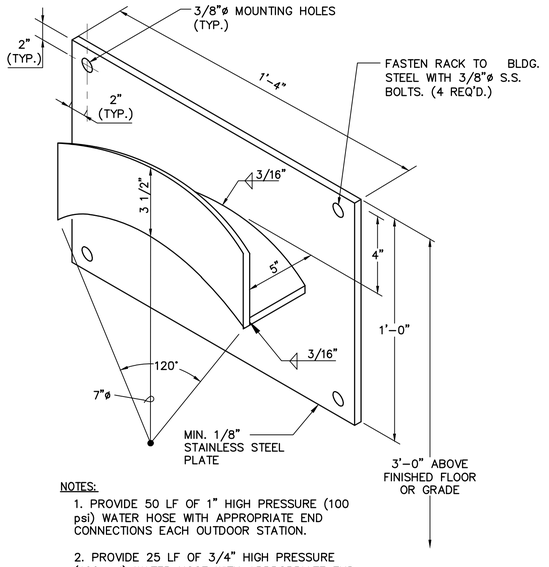

NOTES:
1. PROVIDE 50 LF OF 1" HIGH PRESSURE (100 psi) WATER HOSE WITH APPROPRIATE END CONNECTIONS EACH OUTDOOR STATION.
2. PROVIDE 25 LF OF 3/4" HIGH PRESSURE (100 psi) WATER HOSE WITH APPROPRIATE END CONNECTIONS FOR STATION INSIDE BLDG.

DETAIL – WATER HOSE RACK

SCALE: N.T.S.

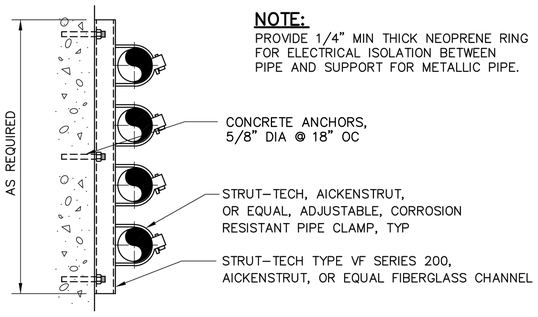

NOTE:
PROVIDE 1/4" MIN THICK NEOPRENE RING FOR ELECTRICAL ISOLATION BETWEEN PIPE AND SUPPORT FOR METALLIC PIPE.

CORROSION RESISTANT WALL TYPE PIPE SUPPORT FOR USE IN CHEMICAL AREAS

SCALE: N.T.S.

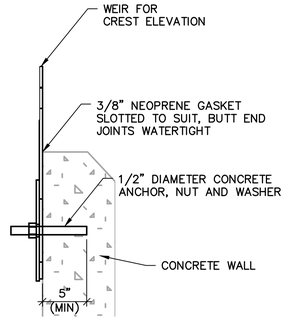

CIRCULAR TANK WEIR PLATE SECTION

SCALE: N.T.S.

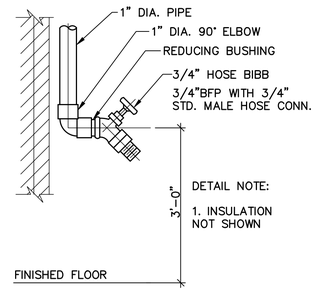

HOSE BIBB DETAIL

SCALE: N.T.S.

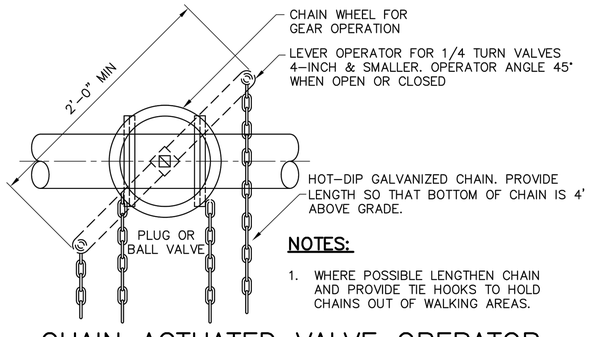

NOTES:
1. WHERE POSSIBLE LENGTHEN CHAIN AND PROVIDE TIE HOOKS TO HOLD CHAINS OUT OF WALKING AREAS.

CHAIN ACTUATED VALVE OPERATOR

SCALE: N.T.S.

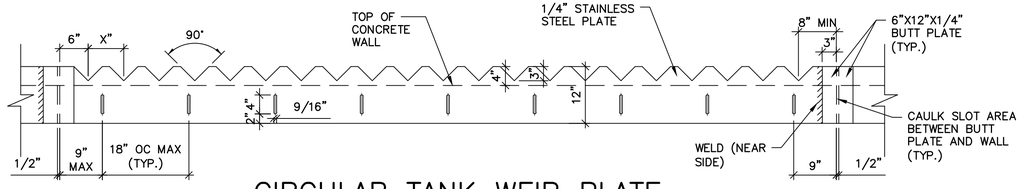

CIRCULAR TANK WEIR PLATE

SCALE: N.T.S.

User:TTHOMAS Spec:AUS-NCSMOD File:I:\ACAD\PROJ\GABPA134 – CSO GROUP 1\BID PACKAGE 2\SHEETS\MECHANICAL\M-025.DWG Scale:1:1 SavedDate:8/7/2018 Time:15:18 Plot Date: Thomas, Travis; 7/31/2019; 08:45 ; Layout:50

COPYRIGHT: ARCADIS U.S., INC. 2016

IF THIS BAR IS NOT 1" INDICATED SCALE IS INCORRECT

NO.	DATE	ISSUED FOR	BY
0	JUL 2019	BIDDING	HG

SEALS

GEORGIA REGISTERED PROFESSIONAL ENGINEER HAMILTON DAY GILES 7/31/19

ARCADIS A Joint Venture
BPA
2839 Paces Ferry Road
Suite 900
Atlanta, GA 30339
Tel: 770–431–8666
Fax: 770–435–2666
www.arcadis–us.com

ATLANTA, GEORGIA
CITY OF ATLANTA
DEPARTMENT OF WATERSHED MANAGEMENT

EAST AREA WATER QUALITY CONTROL FACILITY IMPROVEMENTS

W.01.02.0085

SHEET TITLE

STANDARD MECHANICAL DETAILS 2

DATE:	JULY 2019
PROJECT NO.:	GABPA134
DESIGNED BY:	M. BRONSTEIN
DRAWN BY:	R. KUNZ
CHECKED BY:	W. GRUBBS

SCALE: NONE

M–025

SHEET 50 OF 150

GENERAL

1. THE SYMBOLS, ABBREVIATIONS, AND LAP SPLICE AND EMBEDMENT TABLE ON THIS SHEET IS A COMPREHENSIVE STANDARD GUIDE FOR GENERAL USE ON ALL PROJECTS. THEREFORE NOT ALL THE SYMBOLS AND ABBREVIATIONS CONTAINED IN THIS LIST ARE NECESSARILY USED ON THIS PARTICULAR PROJECT AND SHOULD BE USED FOR CLARIFICATION ONLY.
2. QUALITY OF CONSTRUCTION REQUIRED, PERFORMANCE LEVELS OF WORKMANSHIP, MANUFACTURING AND INDUSTRY STANDARDS, STRENGTH AND PHYSICAL REQUIREMENTS OF MATERIALS, CONFORMANCE TO CODES AND REGULATIONS, GUARANTEES AND OTHER PROJECT REQUIREMENTS ARE SPECIFIED IN THE PROJECT MANUAL.
3. IF MATERIALS, QUANTITIES, STRENGTHS OR SIZES INDICATED BY THE DRAWINGS OR SPECIFICATIONS ARE NOT IN AGREEMENT WITH THESE NOTES, THE BETTER QUALITY AND/OR GREATER QUANTITY, STRENGTH OR SIZE INDICATED, SPECIFIED, OR NOTED SHALL BE PROVIDED.
4. PERFORM ALL WORK IN COORDINATION WITH ALL DRAWINGS AND INFORMATION RELATED TO STRUCTURAL WORK. ANY CHANGES TO THE EQUIPMENT REQUIRING CHANGES TO THE STRUCTURAL SYSTEMS SHALL BE REDESIGNED BY A PROFESSIONAL ENGINEER AT NO COST TO THE OWNER AND SUBMITTED TO THE ENGINEER. SUBMITTAL SHALL BE ACKNOWLEDGED IN WRITING BEFORE BEGINNING CONSTRUCTION.
5. IT IS SOLELY THE CONTRACTOR'S RESPONSIBILITY TO DETERMINE ERECTION PROCEDURE AND SEQUENCE TO ENSURE THE SAFETY OF THE STRUCTURE AND ITS COMPONENT PARTS DURING ERECTION. THIS INCLUDES, BUT IS NOT LIMITED TO, THE ADDITION OF WHATEVER TEMPORARY BRACING, GUYS OR TIE-DOWNS MAY BE NECESSARY. SUCH MATERIAL SHALL BE REMOVED AND SHALL REMAIN THE PROPERTY OF THE CONTRACTOR AFTER COMPLETION OF THE PROJECT.
6. FACILITIES HAVE BEEN DESIGNED FOR DESIGN LOADS SHOWN OR SPECIFIED. THE CONTRACTOR SHALL BE RESPONSIBLE FOR FACILITIES SUBJECT TO CONSTRUCTION LOADS EXCEEDING THE DESIGN LOADS AND SHALL NOTIFY THE ENGINEER OF ANY SUCH ADDITIONAL LOADS.
7. DURING CONSTRUCTION, STRUCTURE MAY BE BUOYANT WHEN EMPTY. IN THE EVENT THAT THE EXCAVATION BECOMES FLOODED OR THE SURROUNDING GROUND BECOMES SATURATED ALL NECESSARY PRECAUTIONS SHALL BE TAKEN TO PREVENT FLOATATION OF THE STRUCTURE.
8. ALL DIMENSIONS AND ELEVATIONS NOTED THUS (*) ON STRUCTURES SHOWN ON THE STRUCTURAL DRAWINGS SHALL BE VERIFIED BY THE CONTRACTOR IN THE FIELD OR WITH THE EQUIPMENT MANUFACTURER AND SHALL CONFORM TO THOSE SHOWN ON OTHER DRAWINGS.
9. DESIGN LOADS: BASED ON THE INTERNATIONAL BUILDING CODE, 2012 EDITION WITH 2014,2015,2017 & 2018 GEORGIA STATE AMENDMENTS.

FLOOR LIVE LOADS:	SEE PLANS
ROOF LIVE LOAD:	
– DESIGN LIVE LOAD	30 PSF
– COLLATERAL (MISC., HVAC, ELEC.)	10 PSF
ROOF SNOW LOAD:	
– GROUND SNOW LOAD	5 PSF
WIND LOAD:	
– ULTIMATE WIND SPEED	120 MPH
– SERVICE WIND SPEED	90 MPH
– RISK CATEGORY	III
– WIND EXPOSURE	C
– INTERNAL PRESSURE COEFFICIENT:	
– ALL BUILDINGS	±0.55
– COMPONENTS AND CLADDING (SEE SPECIFICATIONS)	
EARTHQUAKE DESIGN DATA:	
– SEISMIC RISK CATEGORY	III
– SEISMIC IMPORTANCE FACTOR:	
– RISK CATEGORY III STRUCTURE	1.25
– SPECTRAL RESPONSE ACCELERATIONS, S_s	0.184
– SPECTRAL RESPONSE ACCELERATIONS, S_1	0.090
– SITE CLASS	D
– SPECTRAL RESPONSE COEFFICIENT, S_{DS}	0.197
– SPECTRAL RESPONSE COEFFICIENT, S_{D1}	0.143
– SEISMIC DESIGN CATEGORY	C
– DESIGN BASE SHEAR:	0.091
– ANALYSIS PROCEDURE	
– FOR BUILDINGS	ASCE 7–10
GROUNDWATER DESIGN DATA:	
– GROUNDWATER	NA
– DESIGN PERCHED GROUNDWATER	AT GRADE
– 100 YEAR FLOOD ELEVATION	EL. 802
LATERAL EARTH PRESSURE DESIGN DATA: (BASED ON COMPACTED SELECT BACKFILL)	
– AT–REST COEFFICIENT (Ko)	0.53
– SURCHARGE	300 PSF

FOUNDATIONS

1. THE CONTRACTOR SHALL BECOME FAMILIAR WITH THE SURVEY AND THE SUBSURFACE INVESTIGATION REPORT BEFORE BEGINNING CONSTRUCTION. REFER TO REPORT OF SUBSURFACE EXPLORATION, DATED OCTOBER 27, 2015 BY WILLMER ENGINEERING INC.
2. NOTIFY THE ENGINEER AS SOON AS POSSIBLE OF ANY UNUSUAL SOIL CONDITIONS OR SOIL CONDITIONS IN VARIANCE WITH TEST BORINGS, SUCH AS UNEXPECTED SPRING OR SEEPAGE WATER, MATERIAL DIFFERING FROM TEST BORINGS, OR SOIL OF QUESTIONABLE BEARING CAPACITY.
3. SET FOUNDATIONS AT ELEVATIONS SHOWN. THE CONTRACTOR SHALL VERIFY WITH THE ENGINEER THAT EACH FOOTING PLACED IS BEARING ON DESIGN MATERIAL.
4. ALLOWABLE SOIL BEARING PRESSURE: REFER TO STRUCTURAL PLANS.
5. FOOTINGS SHALL REST ON WEATHERED ROCK OR COMPACTED SELECT OR CONCRETE FILL.
6. LEVELS OF BACKFILL AGAINST CONCRETE WALLS SHALL NOT DIFFER BY MORE THAN 2'–0" ON EITHER SIDE OF WALLS UNLESS ADEQUATELY BRACED OR ALL FLOOR FRAMING IS IN PLACE UP TO AND INCLUDING GRADE LEVEL SLABS.
7. PROTECT EXCAVATION FROM FLOODING UNTIL ALL WALLS AND FLOOR FRAMING UP TO AND INCLUDING GRADE LEVEL FLOORS ARE IN PLACE AND BACKFILLING HAS BEGUN. WATER LEVEL SHALL BE MAINTAINED BELOW EXCAVATION AT ALL TIMES.

CAST–IN–PLACE CONCRETE

1. CONCRETE SHALL HAVE THE FOLLOWING MINIMUM COMPRESSIVE STRENGTH AT 28 DAYS:
   A. 4,500 POUNDS PER SQUARE INCH (PSI) WITH ENTRAINED AIR FOR ALL CONCRETE UNLESS SPECIFICALLY NOTED OTHERWISE.
2. ALL CONCRETE WORK NOT COVERED UNDER ACI 350 SHALL BE IN ACCORDANCE WITH "THE BUILDING CODE REQUIREMENTS FOR STRUCTURAL CONCRETE" ACI 318. TOLERANCES SHALL BE IN ACCORDANCE WITH ACI 347, SECTION 3.3.1, TOLERANCES FOR REINFORCED CONCRETE BUILDINGS.
3. ALL REINFORCING STEEL SHALL BE NEW DOMESTIC DEFORMED BILLET STEEL CONFORMING TO ASTM A–615 GRADE 60.
4. ALL REINFORCING DETAILS SHALL CONFORM TO "DETAILS AND DETAILING OF CONCRETE REINFORCEMENT", ACI 315, UNLESS DETAILED OTHERWISE ON THE STRUCTURAL DRAWINGS.
5. CONTRACTOR SHALL REVIEW ALL DRAWINGS FOR SIZE AND LOCATION OF EMBEDDED ITEMS, SLEEVES, SLAB DEPRESSIONS, REQUIRED. THESE ITEMS SHALL BE FURNISHED AND INSTALLED PRIOR TO PLACEMENT OF CONCRETE.
6. ALL BEAMS, SPANDRELS AND SLABS SHALL BE CAST MONOLITHICALLY, EXCEPT FOR REQUIRED CONSTRUCTION JOINTS. CONTRACTOR SHALL SUBMIT ANY AND ALL ALTERNATE AND ADDITIONAL CONSTRUCTION JOINT LOCATIONS AND DETAILS.
7. CONSTRUCTION JOINTS REQUIRED BY THE ENGINEER ARE SHOWN ON THE DRAWINGS. ADDITIONAL CONSTRUCTION JOINTS SHALL BE PROVIDED AS OUTLINED IN SPECIFICATIONS. REINFORCEMENT SHALL BE CONTINUOUS ACROSS CONSTRUCTION JOINTS. SUBMIT ALL CONSTRUCTION JOINT LOCATIONS WITH REINFORCING STEEL SHOP DRAWINGS.
8. CONTRACTOR SHALL PROVIDE 3/4 INCH CHAMFER USING WOOD CHAMFER STRIPS ON ALL EXPOSED CORNERS OF COLUMNS, BEAMS AND WALLS, OR AS REQUIRED TO MATCH EXISTING.
9. CLEARANCES FOR REINFORCING STEEL SHALL CONFORM TO THE FOLLOWING:

TYPICAL REINFORCING BAR CLEARANCE TABLE

CONCRETE CAST AGAINST EARTH	3"
REINFORCING TO CLEAR WATERSTOP	3"
SURFACES EXPOSED TO LIQUIDS, EARTH OR WEATHER	2"
BEAM STIRRUPS AND COLUMN TIES	2"
ALL OTHER SURFACES	2"

10. PROVIDE WATERSTOPS IN ALL FOUNDATIONS, TANKS AND OTHER SUBSTRUCTURES UP TO AN ELEVATION AT LEAST 12 INCHES ABOVE GRADE OR TO AN ELEVATION AT LEAST 12 INCHES ABOVE LIQUID LEVEL IN TANKS, WHICHEVER IS HIGHER, WHETHER SHOWN OR NOT.
11. ALL EXPANSION JOINTS SHALL HAVE WATERSTOPS, UNLESS NOTED OTHERWISE.
12. WELDING OF REINFORCING STEEL IS NOT PERMITTED.
13. CALCIUM CHLORIDE SHALL NOT BE PERMITTED NOR SHALL ANY ADMIXTURE CONTAINING CALCIUM CHLORIDE BE PERMITTED THAT RESULTS IN A TOTAL CONCRETE MIX IN WHICH THE PRESENCE OF CHLORIDE IONS EXCEED 0.15 PERCENT BY WEIGHT OF CEMENT.
14. ALUMINUM PIPE SHALL NOT BE USED WITH CONCRETE PUMPS.
15. AS A MINIMUM, PROVIDE 6 X 6 – W2.9 X W2.9 WELDED WIRE FABRIC IN ALL SLABS ON GRADE, UNLESS OTHERWISE NOTED.

ALUMINUM

1. ALL ALUMINUM SHALL BE NEW AND CONFORM TO THE APPLICABLE ASTM SPECIFICATIONS AS REGISTERED WITH "THE ALUMINUM ASSOCIATION". FOR THE ALLOYS LIST BELOW:
   A. STRUCTURAL SHAPES AND PLATES ALLOY 6061–T6.
   B. WELDING FILLER ALLOY 5356.
   C. BOLTS – STAINLESS STEEL TYPE AISI TYPE 304 OR 316.
   D. ANCHOR BOLTS – STAINLESS STEEL AISI TYPE 304 OR 316.
   E. EXPANSION BOLTS – STAINLESS STEEL AISI TYPE 304 OR 316.
2. SHOP CONNECTIONS SHALL BE BOLTED OR WELDED.
3. FIELD CONNECTIONS SHALL BE BOLTED: FIELD WELDING SHALL NOT BE PERMITTED UNLESS SO NOTED ON THE CONTRACT DRAWINGS.
4. BRACING SHALL HAVE A MINIMUM OF TWO BOLTS PER CONNECTION UNLESS NOTED.
5. ALL BOLTS SHALL BE 3/4" DIA. MIN. UNLESS OTHERWISE NOTED ON CONTRACT DRAWINGS.
6. BEAM CONNECTION SHALL BE PROVIDED TO SUPPORT THE TOTAL ALLOWABLE UNIFORM LOAD CAPACITY OF THE BEAM FOR THE SPAN AND ALLOY INDICATED.
7. WHERE ALUMINUM COMES IN CONTACT WITH CONCRETE OR OTHER DISSIMILAR MATERIALS, BACK PAINT ALUMINUM AS PER PAINT SPECIFICATIONS.

STRUCTURAL STEEL

1. STRUCTURAL STEEL SHALL CONFORM TO THE AISC "SPECIFICATIONS FOR DESIGN, FABRICATION AND ERECTION OF STRUCTURAL STEEL FOR BUILDINGS" LATEST EDITION.
2. WELDED CONNECTIONS SHALL CONFORM TO THE LATEST REVISED CODE THE AMERICAN WELDING SOCIETY, AWS D1.
3. BOLTS AND BOLTED CONNECTIONS SHALL CONFORM TO THE REQUIREMENTS OF THE "SPECIFICATIONS FOR STRUCTURAL JOINTS USING ASTM A325 BOLTS" AS APPROVED BY THE COUNCIL ON RIVETED AND BOLTED JOINTS.
4. STRUCTURAL STEEL:
   W–SHAPES AND WT–SHAPES . . . . . .ASTM A992
   CHANNELS . . . . . ASTM A572 GRADE 50
   TUBE SECTIONS . . . . . ASTM A500 GRADE B
   ANGLES, PLATES AND BARS . . . . . ASTM A36
5. WELDING ELECTRODES SHALL BE E–70XX. FOR WELDING SYMBOLS WITH NO LENGTH DIMENSION GIVEN, THE WELDING SHALL BE CONTINUOUS BETWEEN ABRUPT CHANGES IN DIRECTION. NO INTERMITTENT WELDS SHALL BE PERMITTED, UNLESS OTHERWISE NOTED.

MASONRY

1. COMBINED COMPRESSIVE STRENGTH OF THE MASONRY PRISM SHALL BE 1500 PSI AT 28 DAYS AFTER GROUTING. ALL MASONRY SHALL BE INSPECTED DURING CONSTRUCTION.
2. GROUT ALL REINFORCED CELLS OF CONCRETE BLOCK MASONRY.
3. MORTAR SHALL BE TYPE M PER ASTM C270. GROUT SHALL HAVE A MINIMUM COMPRESSIVE STRENGTH AT 28 DAYS OF 2500 PSI.
4. PROVIDE MINIMUM #4 BARS AT 48" VERTICAL REINFORCEMENT WITH MATCHING DOWELS AT ALL MASONRY WALLS, UNLESS OTHER REINFORCING IS SHOWN OR SPECIFIED.

REINFORCEMENT LAP SPLICE AND EMBEDMENT LENGTHS IN MASONRY

BAR SIZE	EMBEDMENT LENGTH	MIN LAP LENGTHS: 8" AND 12" CMU SINGLY REINF	MIN LAP LENGTHS: 12" CMU DOUBLY REINF
#3	14	19	19
#4	18	25	28
#5	23	31	44
#6	27	53	87

LAP SPLICE AND EMBEDMENT LENGTHS ARE BASED ON A MINIMUM MASONRY COMPRESSIVE STRENGTH OF 1500 PSI AND 60000 PSI FOR REINFORCEMENT (WITH NO EPOXY COATING).

SPECIAL INSPECTION NOTES

1. REFER TO SPECIAL INSPECTION SPECIFICATION FOR CODE REQUIRED SPECIAL INSPECTIONS.
2. CONTRACTOR SHALL PROVIDE ALL LABOR, MATERIALS, TOOLS, EQUIPMENTS, AND INCIDENTALS AS REQUIRED TO COOPERATE WITH THE INDIVIDUAL SPECIAL INSPECTORS AND TESTING AGENCIES EMPLOYED BY THE OWNER TO FACILITATE SPECIAL INSPECTIONS.
3. OWNER DESIGNATED AGENCIES FOR SPECIAL INSPECTION SHALL PERFORM ON SITE INSPECTION IN ACCORDANCE WITH LOCAL BUILDING CODE REGULATION UNDER THE SUPERVISION OF A QUALIFIED SPECIAL INSPECTOR LICENSED IN THE STATE OF GEORGIA.
4. DESIGNATED SPECIAL INSPECTION AGENCY IS RESPONSIBLE FOR ALL REQUIRED TESTING, INSPECTION, AND INSPECTION REPORTS. INSPECTOR IS RESPONSIBLE FOR COMPLETING AND PROVIDING TO THE BUILDING OFFICIAL, OWNER, AND ENGINEER A FINAL REPORT OF SPECIAL INSPECTIONS AND CORRECTION OF DISCREPANCIES NOTED IN THE SPECIAL INSPECTION.
5. CONTRACTOR SHALL NOTIFY SPECIAL INSPECTION AGENCY/LABORATORY AT LEAST 48 HOURS PRIOR TO START OF WORK.
6. INSPECTION AND TESTS REQUIRED IN CHAPTER 17 DO NOT SUPERCEDE ANY OTHER INSPECTIONS AND TESTS REQUIRED BY ANY LAW OR REGULATIONS.

ABBREVIATIONS

AB	– ANCHOR BOLT	EW	– EACH WAY	NTS	– NOT TO SCALE
ADD'L.	– ADDITIONAL	EQ.	– EQUAL	OC	– ON CENTER
ADH.	– ADHESIVE	EXIST.	– EXISTING	OD	– OUTSIDE DIAMETER
ADJ.	– ADJUSTABLE	EXP.	– EXPANSION	OH.	– OVERHEAD
ALT.	– ALTERNATE	EXT.	– EXTERIOR	OPNG.	– OPENING
ALUM.	– ALUMINUM	FDN.	– FOUNDATION	OPP.	– OPPOSITE
ANCH.	– ANCHOR	FE	– FIRE EXTINGUISHER	℄	– PLATE
&	– AND	FIN.	– FINISH	PC	– PRECAST
ARCH.	– ARCHITECT OR ARCHITECTURAL	FL	– FINISH LINE	PSF	– POUNDS PER SQUARE FOOT
		FLR.	– FLOOR	RAD.	– RADIUS
ASTM	– AMERICAN SOCIETY FOR TESTING MATERIALS	FRP	– FIBERGLASS REINFORCED PLASTIC	R.	– RISER
				REINF.	– REINFORCING
@	– AT	FF	– FAR FACE	REQ'D.	– REQUIRED
BSMT.	– BASEMENT	FTG.	– FOOTING	REQ'MTS.	– REQUIREMENTS
BITUM.	– BITUMINOUS	FT.	– FOOT	RM.	– ROOM
B/	– BOTTOM OF	GA.	– GAGE	RO	– ROUGH OPENING
BOT.	– BOTTOM	GALV.	– GALVANIZED	S.	– SOUTH
℄	– BUILDING LINE	GR.	– GRADE	SCHED.	– SCHEDULE
BLDG.	– BUILDING	GRD.	– GROUND	SECT.	– SECTION
BLK.	– BLOCK	GYP BD	– GYPSUM BOARD	SF	– SQUARE FEET
BM.	– BEAM	HORIZ.	– HORIZONTAL	SHT.	– SHEET
B PL	– BASE PLATE	HP	– HIGH POINT	SIM.	– SIMILAR
BRG.	– BEARING	HHP	– HIGH HIGH POINT	SJ	– STEEL JOIST
BRP	– BUILDING REFERENCE POINT	HR.	– HANDRAIL	SLBB	– SHORT LEG BACK–TO–BACK
BT PL.	– BENT PLATE	HT.	– HEIGHT	SLV	– SHORT LEG VERTICAL
C/C	– CENTER TO CENTER	HS	– HIGH STRENGTH	SPA.	– SPACES OR SPACING
CJ	– CONSTRUCTION JOINT	ID	– INSIDE DIAMETER	SPRD.	– SPREAD
℄	– CENTERLINE	IF	– INSIDE FACE	SS	– STAINLESS STEEL
CL.	– CLEAR	INT.	– INTERIOR	STA.	– STATION
CMU	– CONCRETE MASONRY UNIT	INV.	– INVERT	STD.	– STANDARD
COL.	– COLUMN	INSUL.	– INSULATION	STL.	– STEEL
CTR.	– CENTER	JT.	– JOINT	STR.	– STRUCTURAL
CONC.	– CONCRETE	K.	– KIP (1000 POUNDS)	SUP.	– SUPPORT
CONST.	– CONSTRUCTION	KB	– KNEE BRACE	SYM.	– SYMMETRICAL
CONT.	– CONTINUOUS	LB.	– POUNDS	T.	– TREAD
CONTL.	– CONTROL	LL	– LIVE LOAD	T/	– TOP OF
DEPR.	– DEPRESSION	LLBB	– LONG LEG BACK–TO–BACK	T&B	– TOP AND BOTTOM
DET.	– DETAIL	LG.	– LONG	TEMP.	– TEMPORARY
DI	– DUCTILE IRON	LLH	– LONG LEG HORIZONTAL	THK.	– THICK
DIA.	– DIAMETER	LLV	– LONG LEG VERTICAL	TOM	– TOP OF MASONRY
DIM.	– DIMENSION	LONG.	– LONGITUDINAL	TOS	– TOP OF STEEL
DL	– DEAD LOAD	LP	– LOW POINT	TYP.	– TYPICAL
DIST.	– DISTANCE	LW	– LIGHT WEIGHT	UON	– UNLESS OTHERWISE NOTED
DWG.	– DRAWING	MFG.	– MANUFACTURER	VERT.	– VERTICAL
DWL.	– DOWEL	MAS.	– MASONRY	W/	– WITH
EA.	– EACH	MAX.	– MAXIMUM	W.	– WEST
EE	– EACH END	MID.	– MIDDLE	W/O	– WITHOUT
EF	– EACH FACE	MIN.	– MINIMUM	WP	– WORK POINT
EJ	– EXPANSION JOINT	MK.	– MARK	WS	– WATER STOP
EL.	– ELEVATION	MO	– MASONRY OPENING	WT	– WEIGHT
ELEC.	– ELECTRICAL	NA	– NOT APPLICABLE	WWF	– WELDED WIRE FABRIC
E.	– EAST	N.	– NORTH		
EMBD.	– EMBEDDED	NF	– NEAR FACE		

SYMBOLS

UNDISTURBED SOIL
ROCK
SUBBASE
MUDMAT
SELECT BACKFILL
GENERAL FILL
GRATING
STEEL
CHECKERED PLATE
BRICK
CMU
CONCRETE
GROUT

LAP SPLICE AND EMBEDMENT LENGTH TABLE

REINFORCEMENT LAP SPLICE, EMBEDMENT LENGTH AND STANDARD HOOKS

BAR SIZE	MIN LAP LENGTHS FOR BEAMS AND COLUMNS* CLASS B TOP***	MIN LAP LENGTHS FOR BEAMS AND COLUMNS* CLASS B OTHERS	MIN LAP LENGTHS FOR SLABS AND WALLS ** CLASS B TOP***	MIN LAP LENGTHS FOR SLABS AND WALLS ** CLASS B OTHERS	MIN EMBEDMENT LENGTHS FOR BEAMS AND COLUMNS* TOP***	MIN EMBEDMENT LENGTHS FOR BEAMS AND COLUMNS* OTHERS	MIN EMBEDMENT LENGTHS FOR SLABS AND WALLS ** TOP***	MIN EMBEDMENT LENGTHS FOR SLABS AND WALLS ** OTHERS	WITH STD HOOKS	MIN STD. HOOKS 90° A OR G	MIN STD. HOOKS 90° H	MIN STD. HOOKS 135° A OR G	MIN STD. HOOKS 135° H
#3	25	19	16	16	19	15	12	12	5	6	4	2.5	
#4	33	25	20	16	25	19	15	12	7	8	4.5	3	
#5	41	31	25	19	31	24	19	15	9	10	5.5	3.75	
#6	49	37	29	23	37	29	23	18	10	12	8	4.5	
#7	71	54	43	33	54	42	33	25	12	14	9	5.25	
#8	81	62	49	37	62	48	37	29	14	16	10.5	6	
#9	91	70	60	46	70	54	46	36	15	19	–	–	
#10	102	79	74	57	79	61	57	44	17	22	–	–	
#11	114	87	89	69	87	67	68	53	19	24	–	–	

REINFORCEMENT LAP SPLICE, EMBEDMENT LENGTH AND STANDARD HOOKS TABLE IS BASED ON A MINIMUM CONCRETE COMPRESSIVE STRENGTH OF 4000 PSI AND 60000 PSI REINFORCEMENT (WITH NO EPOXY COATING).

ALL LAPS SPLICES SHALL BE CLASS B SPLICES.

* THE MINIMUM LAP LENGTH FOR BEAMS, COLUMNS, AND STRAIGHT EMBEDMENTS ARE BASED ON A 3 BAR DIAMETER MINIMUM CENTER TO CENTER BAR SPACING AND A 2 INCH BAR COVER. IF THE SPLICE AND/OR EMBEDMENT DOES NOT CONFORM TO THESE REQUIREMENTS, THEN CONTRACTOR SHALL APPLY APPROPRIATE FACTORS IN COMPLIANCE WITH ACI 318 WITH APPROVAL BY ENGINEER.

** THE MINIMUM LAP LENGTH FOR SLABS, WALLS, AND STRAIGHT EMBEDMENTS ARE BASED ON A 6 INCH BAR SPACING AND A 2 INCH BAR COVER. IF THE LAP CONDITION DOES NOTE CONFORM TO THESE REQUIREMENTS, THEN USE BEAM LAP LENGTHS; OR COMPLY WITH LAP REQUIREMENTS OF ACI 318 WITH APPROVAL BY ENGINEER.

*** TOP BARS ARE DEFINED AS ALL HORIZONTAL BARS WITH 12" OR MORE FRESH CONCRETE BENEATH.

WHERE SPLICES ARE REQUIRED BETWEEN BARS OF DIFFERENT SIZES, THE LAP LENGTH SHALL BE NO LESS THAN THE EMBEDMENT LENGTH OF THE LARGER BAR OR THE LAP LENGTH OF THE SMALLER BAR, WHICHEVER IS GREATER.

IN CIRCULAR TANKS DESIGNED FOR RING TENSION, THE LOCATION OF SPLICES SHOULD BE STAGGERED. ADJACENT HOOP REINFORCING SPLICES SHOULD BE STAGGERED HORIZONTALLY (CENTER OF LAP TO CENTER OF LAP) BY NOT LESS THAN ONE LAP LENGTH NOR 3 FEET AND SHOULD NOT COINCIDE IN VERTICAL ARRAYS MORE FREQUENTLY THAN EVERY THIRD BAR.

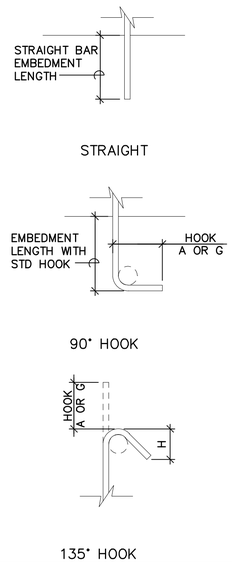

COPYRIGHT: ARCADIS U.S., INC. 2016

IF THIS BAR IS NOT 1" INDICATED SCALE IS INCORRECT

NO.	DATE	ISSUED FOR	BY
0	JUL 2019	BIDDING	HG

SEALS

GEORGIA REGISTERED No. PE041058 PROFESSIONAL 7/31/19 ENGINEER HOUSAM HOBI

ARCADIS BPA A Joint Venture
2839 Paces Ferry Road
Suite 900
Atlanta, GA 30339
Tel: 770–431–8666
Fax: 770–435–2666
www.arcadis–us.com

ATLANTA, GEORGIA
CITY OF ATLANTA
DEPARTMENT OF WATERSHED MANAGEMENT

EAST AREA WATER QUALITY CONTROL FACILITY IMPROVEMENTS

W.01.02.0085

SHEET TITLE
GENERAL STRUCTURAL NOTES

DATE:	JULY 2019
PROJECT NO.:	GABPA134
DESIGNED BY:	J. STEWART
DRAWN BY:	V. VIEIRA
CHECKED BY:	J. STEWART

SCALE: NONE

S–001

SHEET 51 OF 150

User:THOMAS Spec: AUS–NCSMOD File: I:\ACAD\PROJ\GABPA134 – CSO GROUP 1\BID PACKAGE 2\SHEETS\STRUCTURAL\S–001.DWG Scale:1:1 SavedDate:5/31/2019 Time:17:21 Plot Date: Thomas, Travis: 7/31/2019, 09:33 ; Layout:S1

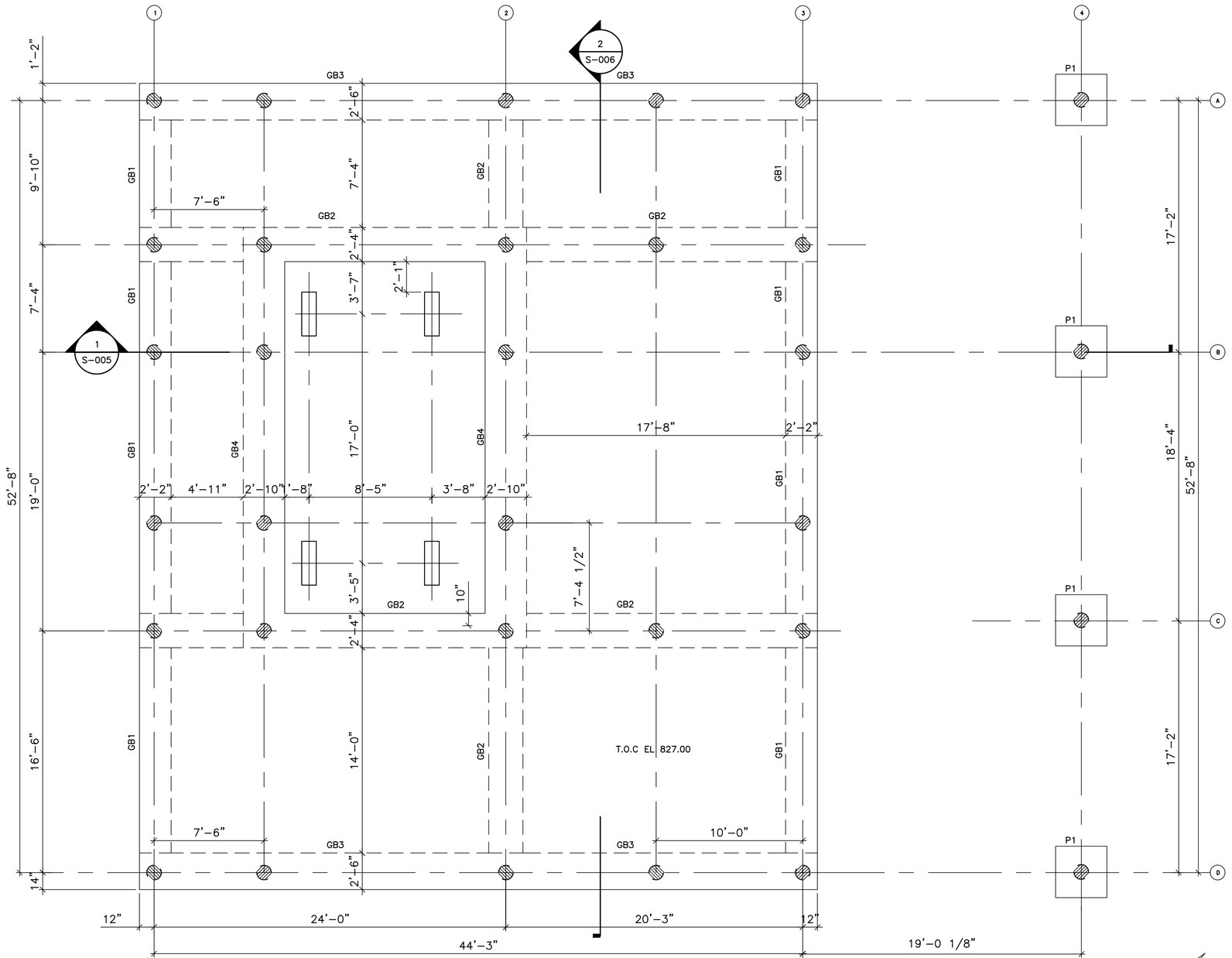

SLUDGE DEWATERING BUILDING FOUNDATION PLAN

SCALE: 1/4" = 1'

DESIGN CRITERIA:

1. BUILDING FOUNDATION SHOWN IS PRELIMINARY SIZED FOR LOADS AND BEARING PRESSURES PER 2012 INTERNATIONAL BUILDING CODE. ONCE BUILDING MANUFACTURER IS SELECTED, CONTRACTOR SHALL SUBMIT BUILDING MANUFACTURER'S SHOW DRAWING AS REQUIRED PER SPECIFICATION TO ENGINEER FOR REVIEW AND APPROVAL PRIOR TO FABRICATION OF BUILDING AND FOUNDATION CONSTRUCTION.

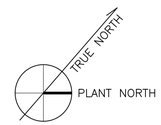

FOUNDATION: AUGER CAST PILES NOTES:

1. PREPARE THE SUBSURFACE MATERIAL BELOW THE FACILITY BASE SLAB PER THE RECOMMENDATIONS OF THE PROJECT GEOTECHNICAL REPORT.
2. PIPE & EQUIPMENT LAYOUTS ARE SHOWN FOR GENERAL INFORMATION ONLY. REFERENCE CIVIL,MECHANICAL & EQUIPMENT VENDOR DRAWINGS FOR SIZES LOCATION & INFO REGARDING PIPING & MISCELLANEOUS EQUIPMENT EITHER SHOWN OR NOT SHOWN.
3. THE INSTALLATION OF ALL AUGER CAST PILES SHALL BE OBSERVED BY THE GEOTECHNICAL ENGINEER TO BE HIRED BY THE CITY.
4. PRIOR TO THE START OF PRODUCTION PILING A MINIMUM OF ONE COMPRESSION LOAD TEST, IN ACCORDANCE WITH (ASTM D1143), SHALL BE PERFORMED ON A NON PRODUCTION PILE BY THE CONTRACTOR, AT A LOCATION DETERMINED BY THE GEOTECHNICAL ENGINEER. LOAD TESTS SHALL BE PERFORMED UNDER THE DIRECT SUPERVISION OF THE GEOTECHNICAL ENGINEER. THE MINIMUM TEST LOADS SHALL BE TWICE THE PILE DESIGN CAPACITY. IF INSTALLATION CONDITIONS OF PRODUCTION PILES ARE MARKEDLY DIFFERENT FROM THOSE OBSERVED DURING TEST PILE INSTALLATION ANOTHER COMPRESSION LOAD TEST PILE SHALL BE INSTALLED AT A LOCATION DETERMINED BY THE GEOTECHNICAL ENGINEER TO DETERMINE IF REPLACEMENT PILES ARE REQUIRED.
5. AUGER CAST PILE GROUT – MIX DESIGN : THE GROUT SHALL CONSIST OF A MIXTURE OF THE FOLLOWING:

   A. TYPE II PORTLANT CEMENT.
   B. WATER
   C. FINE AGGREGATE, ASTM C33 NATURAL SILICA SAND.
   D. FLUIDIFIER, COMPLY WITH ASTM C937.
   E. ADMIXTURES.

   GROUT SHALL BE PROPORTIONED AND MIXED SO THAT IT WILL EXHIBIT THE FOLLOWING PROPERTIES:

   A. ALL SOLIDS SHALL REMAIN IN SUSPENSION IN THE GROUT WITHOUT EXCESSIVE BLEED–WATER.
   B. THE GROUT SHALL BE TESTER FOR FLUID CONSISTENCY (USING A FLOW CONE) IN ACCORDANCE WITH ASTM C939.
   C. THE GROUT SHALL NOT EXHIBIT SHRINKAGE IN EXCESS OF 0.15% IN THE VERTICAL DIRECTION. AS TESTED IN ACCORDANCE WITH ASTM C 1090. GROUT SAMPLES SHALL BE HOUSED IN 100% HUMIDITY ROOM AT THE TEMPERATURE OF 68°F TO 74°F.
   D. GROUT SAMPLES RECOVERED FOR STRENGTH TESTING, SHALL EXHIBIT A MINIMUM COMPRESSIVE STRENGTH OF 5000 PSI 28 DAYS AFTER CASTING.
   E. THE SUBMITTED MIX DESIGN SHALL INCLUDE CURVES OF VISCOSITY LOSS VERSUS TIME. IN ADDITION, GROUT SHALL BE DESIGNED SO AS TO MAINTAIN THE RANGE OF ACCEPTABLE FLUID CONSISTENCY FOR A PERIOD OF AT LEAST 2 HOURS OR LONGER REQUIRED BY THE PROJECT–SPECIFIC PILE INSTALLATION PLAN.
   F. STRENGTH DEVELOPMENT VERSUS TIME CURVE/DATA SHALL BE PROVIDED, WITH DATA FOR TIMES BEYOND 28 DAYS AS REQUIRED FOR MIXES THAT INCLUDE FLY ASH.
   G. FOR VOLUME ESTIMATE, GROUT VOLUME MAYBE 1.5 TIMES OR GREATER THAN THE THEORETICAL PILE VOLUME.
   H. GROUT FACTOR IS THE RATIO OF THE PUMPED GROUT VOLUME TO THE THEORETICAL VOLUME OF THE DRILLED HOLE. GROUT FACTOR SHALL BE EQUAL TO OR GREATER THAN 1.2.
   I. A MINIMUM OF ONE SET OF SIX 4"X 8" GROUT CYLINDER SHALL BE MADE FOR EACH DAY OF PILE INSTALLATION.
6. PILES WITHIN 6' OF EACH OTHER SHALL NOT BE INSTALLED ON THE SAME DAY.
7. IF SUBSIDENCE OF FRESH GROUT OCCURS WITHIN TWO HOURS FOLLOWING GROUTING OPERATION, THE PILE SHOULD BE TOPPED WITH FRESH GROUT TO THE CORRECT CUT OFF ELEVATION.
8. REFUSAL CRITERIA IS ONE MINUTE DURATION REQUIRED FOR 12" OR LESS OF PENETRATION, AUGER CAST PILES SHALL BE DRILLED TO REFUSAL AFTER THE DESIGN TIP ELEVATION IS REACHED.
9. CONTRACTOR SHALL SUBMIT AUGER CAST PILE INSTALLATION PLAN. FOR REVIEW BY ENGINEER.

NOTES:
1. BUILDING PERIMETER CONCRETE WALL NOT SHOWN FOR CLARITY.

GRADE BEAM SCHEDULE

MARK	SIZE (WxD)	REINFORCING		REMARKS
		CONT. BARS	STIRRUPS	
GB1	26" x 28"	(7) #8 T&B	#4 @ 10" O.C.	ADD #5@12" EF
GB2	28" x 36"	(7) #8 T&B	#4 @ 10" O.C.	ADD #5@12" EF
GB3	30" x 30"	(8) #8 T&B	#4 @ 10" O.C.	ADD #5@12" EF
GB4	34" x 32"	(9) #9 T&B	#4 @ 10" O.C.	ADD #5@12" EF

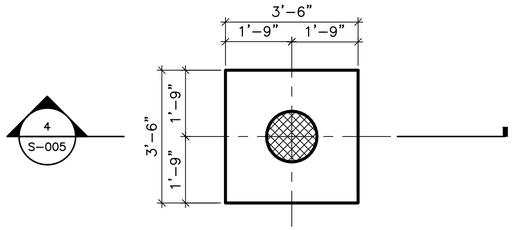

PILE CAP – P1

SCALE: 1/2" = 1'-0"

COPYRIGHT:
ARCADIS U.S., INC.
2016

IF THIS BAR IS NOT 1" INDICATED SCALE IS INCORRECT

NO.	DATE	ISSUED FOR	BY
0	JUL 2019	BIDDING	HG

SEALS

GEORGIA REGISTERED No. PE041058 PROFESSIONAL 7/31/19 ENGINEER HOUSAM HOBI

ARCADIS
BPA
A Joint Venture
2839 Paces Ferry Road
Suite 900
Atlanta, GA 30339
Tel: 770–431–8666
Fax: 770–435–2666
www.arcadis–us.com

ATLANTA, GEORGIA
CITY OF ATLANTA
DEPARTMENT OF WATERSHED MANAGEMENT

EAST AREA WATER QUALITY CONTROL FACILITY IMPROVEMENTS

W.01.02.0085

SHEET TITLE

SLUDGE DEWATERING BUILDING FOUNDATION PLAN

DATE:	JULY 2019
PROJECT NO.:	GABPA134
DESIGNED BY:	V. VIEIRA
DRAWN BY:	V. VIEIRA
CHECKED BY:	J. STEWART

SCALE: 1/4" = 1'

S–002

SHEET 52 OF 150

User:THOMAS Spec:AUS–NCSM00 File:I:\ACAD\PROJ\GABPA134 – CSO GROUP 1\BID PACKAGE 2\SHEETS\STRUCTURAL\S–002.DWG Scale:1:1 SavedDate:7/30/2019 Time:15:06 Plot Date: Thomas, Travis; 7/31/2019, 09:36 ; Layout:S2 Time:15:06

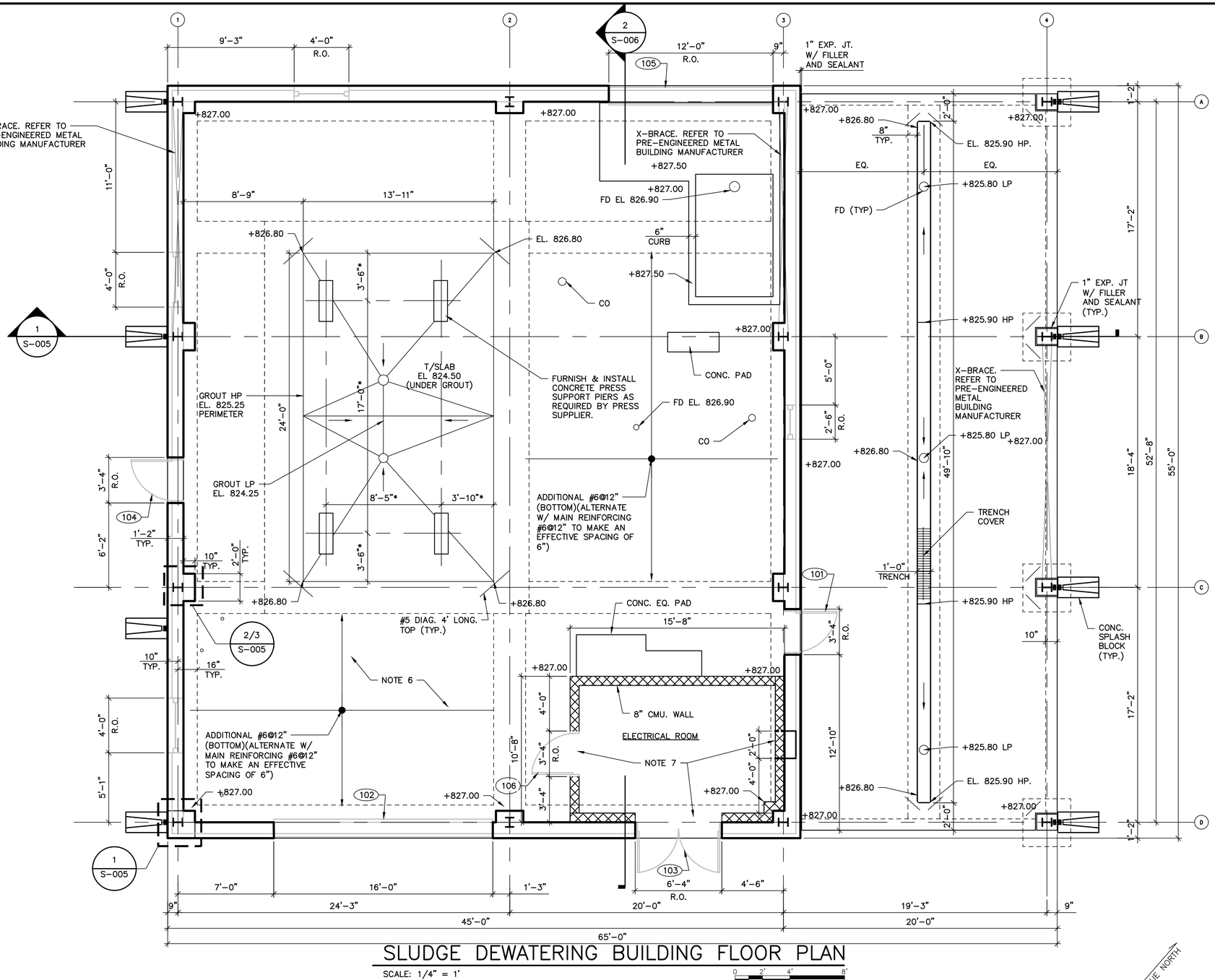

SLUDGE DEWATERING BUILDING FLOOR PLAN

SCALE: 1/4" = 1'

0 2' 4' 8'

TRUE NORTH

PLANT NORTH

DESIGN CRITERIA:

1. DESIGN CRITERIA: DESIGNED IN ACCORDANCE WITH THE FOLLOWING CODES.
   - A. 2012 INTERNATIONAL BUILDING CODE WITH GEORGIA AMENDMENTS (2014, 2015, 2017, 2018).
   - B. 2012 INTERNATIONAL FIRE CODE WITH GEORGIA AMENDMENTS (2014).
   - C. 2012 INTERNATIONAL PLUMBING CODE WITH GEORGIA AMENDMENTS (2014, 2015).
   - D. 2012 INTERNATIONAL MECHANICAL CODE WITH GEORGIA AMENDMENTS (2015).
   - E. 2012 INTERNATIONAL FUEL GAS CODE WITH GEORGIA AMENDMENTS (2014, 2015).
   - F. 2017 NATIONAL ELECTRICAL CODE WITH NO GEORGIA AMENDMENTS
   - G. 2009 INTERNATIONAL ENERGY CONSERVATION CODE WITH GEORGIA SUPPLEMENTS AND AMENDMENTS (2011, 2012).
   - H. 2012 NFPA 101, LIFE SAFETY CODE WITH STATE AMENDMENTS (2013).
2. WIND LOAD
   - A. ULTIMATE WIND SPEED = 120 MPH
   - B. SERVICE WIND SPEED = 90 MPH
   - C. RISK CATEGORY = CATEGORY III
   - D. EXPOSURE CATEGORY = C
   - E. ENCLOSURE CLASSIFICATION = PARTIALLY ENCLOSED
   - F. INTERNAL PRESSURE COEFFICIENT = +/– 0.55
   - G. COMPONENTS AND CLADDING WIND PRESSURE PER ASCE 7–10
     - WALL ZONE 5: 45
     - WALL ZONE 4: 42
     - ROOF ZONE 3: 74
     - ROOF ZONE 2: 51
     - ROOF ZONE 1: 39
     - ROOF OVERHANG ZONE 2: 48
     - ROOF OVERHANG ZONE 3: 57
     - a=5'–0"
3. SEISMIC LOAD
   - A. IMPORTANCE FACTOR = 1.25
   - B. SITE CLASS = D
   - C. SPECTRAL RESPONSE ACCELERATION COEFFICIENT
     - S_s = 18.5%
     - S_1 = 9%
   - D. SEISMIC DESIGN CATEGORY = C
4. STEEL FRAMING AND WALL PANELS BY METAL BUILDING MANUFACTURER.

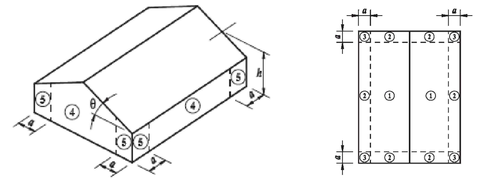

WIND ZONE DIAGRAM

CODE ANALYSIS:

SLUDGE DEWATERING BUILDING
USE GROUP – GROUP F1 (FACTORY, MODERATE HAZARD)
CONSTRUCT TYPE (CHAPTER 6) – IIB UNPROTECTED, NON–COMBUSTIBLE

5. OCCUPANCY LOAD:
   - A. OCCUPANT LOAD FACTOR (TABLE 1004.1.2) – INDUSTRIAL 100 GROSS
   - B. SLUDGE DEWATERING BUILDING – 26.
6. FLOOR AREA (TABLE 503) – ALLOWED 15,500 SQ. FT., ACTUAL = 2,544 SQ. FT.
7. BUILDING HEIGHT (TABLE 503) – ALLOWED = 2 STORIES, ACTUAL = 1 STORY@ ±21 FEET.
8. FIRE–RESISTANCE RATING REQUIREMENTS (TABLE 601) – TYPE IIB CONSTRUCTION – 0 HOURS
9. FIRE–RESISTANCE RATING OF EXTERIOR WALLS BASED ON FIRE SEPARATION DISTANCE (TABLE 602) – THERE ARE NO BUILDINGS WITHIN 30–FEET OF THE SLUDGE DEWATERING BUILDING.
10. MEANS OF EGRESS, MAXIMUM TRAVEL DISTANCE – ALLOWED = 200–FEET, ACTUAL = 43–FEET.
11. ACCESSIBILITY – NOT REQUIRED AS PER SECTION 1103.2.9. COMPONENTS ARE DESIGNED TO BE AS ACCESSIBLE AS IS PRACTICAL.
12. ENERGY EFFICIENCY – CLIMATE ZONE 3:
    - A. TABLE C402.1.2:
      1. ROOFS –U–0.035
      2. WALLS – U–0.079
    - B. TABLE C402.2
      1. ROOFS –R–19 + R–11 LS
      2. WALLS – R–13 + R6.5ci
      3. SLAB–ON–GRADE FLOORS – NOT REQUIRED
      4. OPAQUE DOORS – SWINGING = U–0.61, ROLL–UP = R–4.75
13. FIRE PROTECTION:
    - A. SPRINKLERS – NOT REQUIRED AS PER SECTION 903.2.4
    - B. PORTABLE FIRE EXTINGUISHERS PROVIDED AS PER SECTION 906.
      1. PROVIDE ONE DRY CHEMICAL TYPE AT EACH EXIT DOOR.
      2. PROVIDE ONE CARBON DIOXIDE AT THE ELECTRICAL ROOM.

NOTES:

1. ALLOWABLE SOIL BEARING PRESSURE = 3000 PSF
2. FLOOR LIVE LOAD
   - –BUILDING = 300 PSF
   - –LOAD OUT AREA = HS–20
   - –ELEC. ROOM ROOF = 100 PSF
3. BUILDING FOUNDATION SHOWN IS PRELIMINARY SIZED FOR LOADS AND BEARING PRESSURES. ONCE BUILDING MANUFACTURER IS SELECTED, CONTRACTOR SHALL SUBMIT BUILDING MANUFACTURER'S LAYOUT AND BUILDING REACTIONS TO ENGINEER FOR REVIEW AND APPROVAL PRIOR TO FABRICATION OF BUILDING AND FOUNDATION.
4. PARTITION WALL STEEL FRAMING AND PANELS BY METAL BUILDING MANUFACTURER.
5. SEE MECHANICAL DRAWINGS FOR DRAINS AND PIPING DETAILS.
6. COAT FLOOR WITH ANVIL–TOP 300 OR APPROVED EQUAL.
7. PROVIDE 8" WIDE x 16" DEEP PRE–CAST LINTEL W/ (1) #5 HORIZONTAL BAR, FILLED SOLID WITH GROUT OVER DOOR OPENING. PROVIDE (1) #5 VERTICAL IN GROUT FILLED CELL AT EACH END OF LINTEL.
8. COORDINATE COLUMN LOCATIONS WITH METAL BUILDING MANUFACTURER

COPYRIGHT:
ARCADIS U.S., INC.
2016

IF THIS BAR IS NOT 1" INDICATED SCALE IS INCORRECT

NO.	DATE	ISSUED FOR	BY
0	JUL 2019	BIDDING	HG

SEALS

GEORGIA REGISTERED No. PE041058 PROFESSIONAL ENGINEER HOUSAM HOBI

ARCADIS
BPA
A Joint Venture
2839 Paces Ferry Road
Suite 900
Atlanta, GA 30339
Tel: 770–431–8666
Fax: 770–435–2666
www.arcadis–us.com

ATLANTA, GEORGIA
CITY OF ATLANTA
DEPARTMENT OF WATERSHED MANAGEMENT

EAST AREA WATER QUALITY CONTROL FACILITY IMPROVEMENTS

W.01.02.0085

SHEET TITLE

SLUDGE DEWATERING BUILDING FIRST FLOOR PLAN

DATE:	JULY 2019
PROJECT NO.:	GABPA134
DESIGNED BY:	J. STEWART
DRAWN BY:	V. VIEIRA
CHECKED BY:	J. STEWART

SCALE: 1/4" = 1'

S–003

SHEET 53 OF 150

User: TTHOMAS Spec: AUS–NCSMOD File: I:\ACAD\PROJ\GABPA134 – CSO GROUP 1\BID PACKAGE 2\SHEETS\STRUCTURAL\S–003.DWG Scale: 1:1 SavedDate: 7/29/2019 PlotDate: 7/29/2019 Time: 14:46 Plot Date: Thomas, Travis; 7/31/2019; 09:39 ; Layout: S3

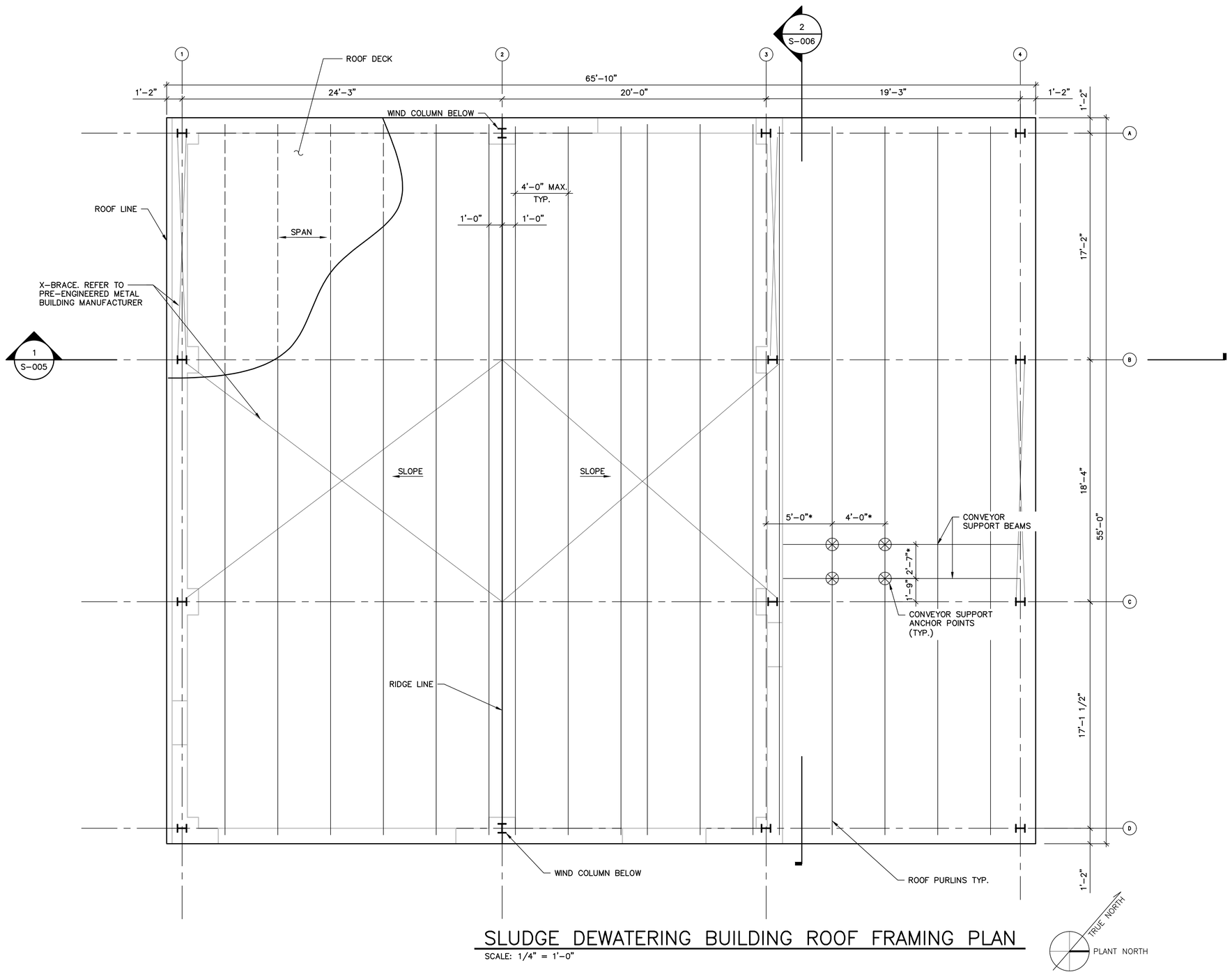

SLUDGE DEWATERING BUILDING ROOF FRAMING PLAN

SCALE: 1/4" = 1'-0"

BUILDING DESIGN CRITERIA:

1. DESIGN ACCORDANCE WITH 2012 INTERNATIONAL BUILDING CODE WITH 2014, 2015, 2017 & 2018 GEORGIA STATE AMENDMENTS.
2. ROOF LIVE LOAD = 30 PSF
3. WIND LOAD
   - A. ULTIMATE WIND SPEED = 120 MPH
   - B. SERVICE WIND SPEED = 90 MPH
   - C. RISK CATEGORY = CATEGORY III
   - D. EXPOSURE CATEGORY = C
   - E. ENCLOSURE CLASSIFICATION = PARTIALLY ENCLOSED
   - F. INTERNAL PRESSURE COEFFICIENT = +/- 0.55
   - G. COMPONENTS AND CLADDING WIND PRESSURE PER ASCE 7-10
     - ROOF ZONE 3: 74
     - ROOF ZONE 2: 51
     - ROOF ZONE 1: 39
     - ROOF OVERHANG ZONE 2: 48
     - ROOF OVERHANG ZONE 3: 57

5'-0" TYP.

3	2	3
2	1	2
3	RIDGE 2	3
3	2	3
2	1	2
3	2	3

WIND ZONE DIAGRAM

4. SEISMIC LOAD
   - A. IMPORTANCE FACTOR = 1.25
   - B. SITE CLASS = D
   - C. SPECTRAL RESPONSE ACCELERATION COEFFICIENT
     - S_s = 18.5%
     - S_1 = 9%
   - D. SEISMIC DESIGN CATEGORY = C
5. STEEL FRAMING AND WALL PANELS BY METAL BUILDING MANUFACTURER.

NOTES:

1. ⊛ DESIGNATES CONVEYOR SUPPORT LOCATIONS. MAGNITUDE OF THE LOAD = 3,000#
2. ROOF PURLIN SHALL BE DESIGNED FOR CONVEYOR LOAD.
3. CONTRACTOR SHALL COORDINATE WITH THE METAL BUILDING MANUFACTURER TO PROVIDE SUPPORT FOR CONVEYOR SYSTEM SHOWN ON MECHANICAL DRAWINGS.

0 2' 4' 6'

COPYRIGHT:
ARCADIS U.S., INC.
2016

IF THIS BAR IS NOT 1" INDICATED SCALE IS INCORRECT

NO.	DATE	ISSUED FOR	BY
0	JUL 2019	BIDDING	HG

SEALS

GEORGIA REGISTERED No. PE041058 PROFESSIONAL ENGINEER HOUSAM HOBI 7/31/19

ARCADIS
BPA
A Joint Venture
2839 Paces Ferry Road
Suite 900
Atlanta, GA 30339
Tel: 770-431-8666
Fax: 770-435-2666
www.arcadis-us.com

ATLANTA, GEORGIA
CITY OF ATLANTA
DEPARTMENT OF WATERSHED MANAGEMENT

EAST AREA WATER QUALITY CONTROL FACILITY IMPROVEMENTS

W.01.02.0085

SHEET TITLE

SLUDGE DEWATERING BUILDING ROOF PLAN AND DETAILS

DATE:	JULY 2019
PROJECT NO.:	GABPA134
DESIGNED BY:	J. STEWART
DRAWN BY:	V. VIEIRA
CHECKED BY:	J. STEWART

SCALE: 1/4" = 1'-0"

S-004

SHEET 54 OF 150

User: TTHOMAS Spec: AUS-NCSMOD File: I:\ACAD\PROJ\GABPA134 - CSO GROUP 1\BID PACKAGE 2\SHEETS\STRUCTURAL\S-004.DWG Scale: 1:1 SavedDate: 7/29/2019 Time: 14:14 Plot Date: Thomas, Travis; 7/31/2019; 09:41 ; Layout: S4

User: TTHOMAS Spec: AUS-NCSM0D File: I:\ACAD\PRO\GABPA134 - CSO GROUP 1\BID PACKAGE 2\SHEETS\STRUCTURAL\S-005.DWG Scale: 1:1 SavedDate: 7/30/2019 Time: 15:30 Plot Date: Thomas, Travis; 7/31/2019; 09:43 ; Layout: S5

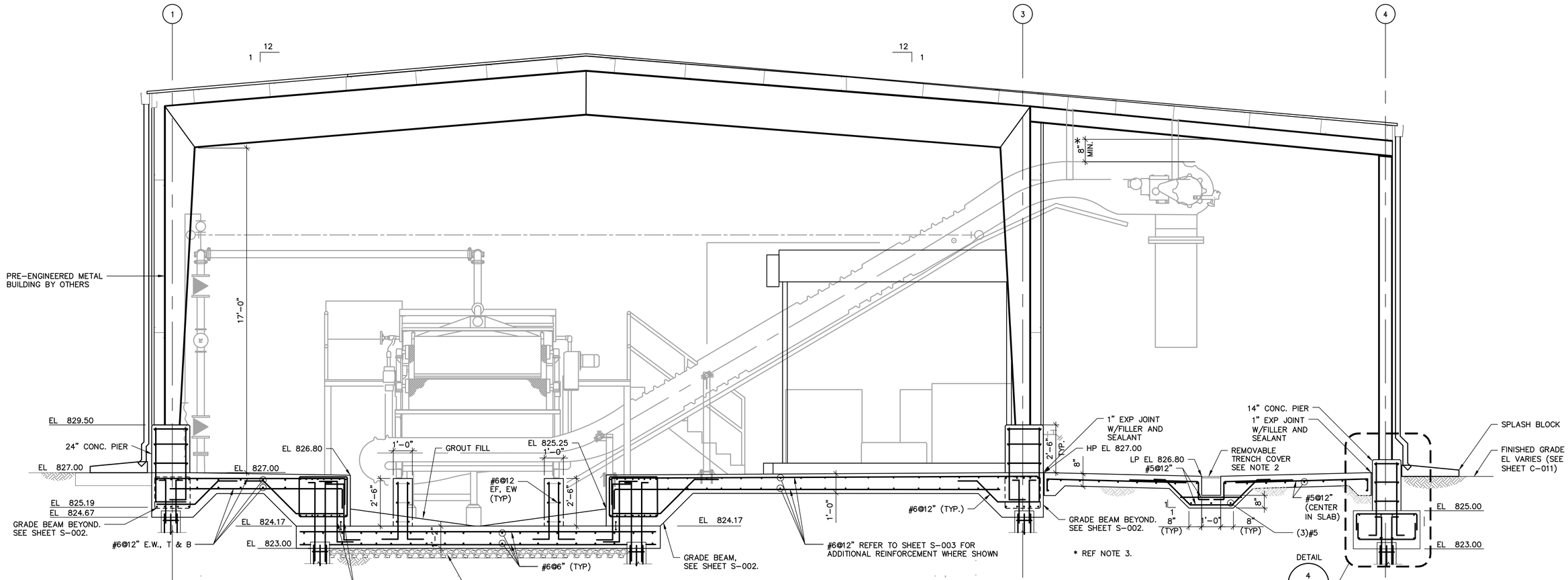

1 S-002 SLUDGE DEWATERING BUILDING – SECTION

0 2' 4' 6'

NOTES:
1. FOR MASONRY DETAILS AND REINFORCEMENT, SEE "S-013" SHEETS.
2. HEAVY-DUTY H-20 TRENCH FRAME WITH GRATED COVER:
   MATERIAL: ASTM A48/A48M, CLASS 35 B.
   PRODUCTS AND MANUFACTURERS:
   a. 6953 SERIES, MANUFACTURED BY EAST JORDAN IRON WORKS, INC.
   b. OR EQUAL.
3. METAL BUILDING HEIGHT SHALL BE ADJUSTED AS REQUIRED TO ACCOMMODATE EQUIPMENT HEIGHT.

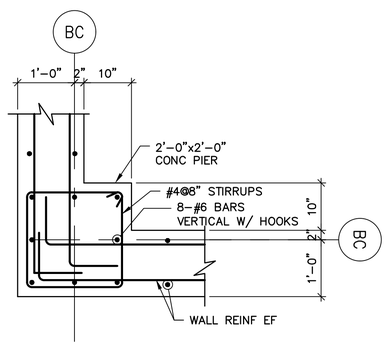

1 S-005 DETAIL

3/4" = 1'-0" 0 1' 2' 3'

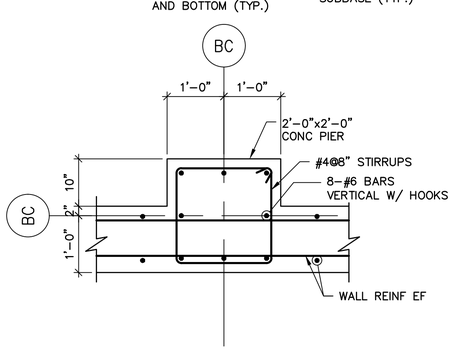

2 S-005 DETAIL

3/4" = 1'-0" 0 1' 2' 3'

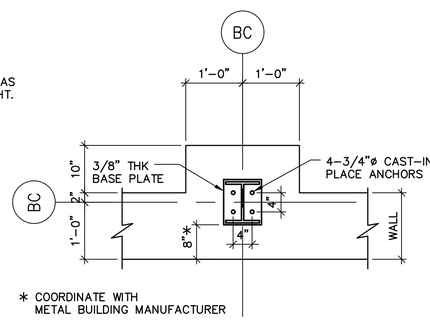

3 S-005 DETAIL

3/4" = 1'-0" 0 1' 2' 3'

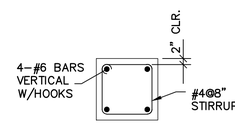

SECTION A-A

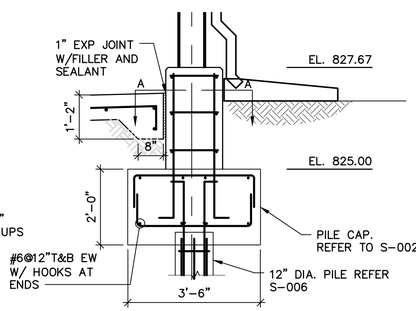

4 S-005 PIER DETAIL

1/2" = 1'-0" 0 1' 2' 4'

COPYRIGHT: ARCADIS U.S., INC. 2016

IF THIS BAR IS NOT 1" INDICATED SCALE IS INCORRECT

NO.	DATE	ISSUED FOR	BY
0	JUL 2019	BIDDING	HG

SEALS

GEORGIA REGISTERED No. PE041058 PROFESSIONAL 7/31/19 ENGINEER HOUSAM HOBI

ARCADIS A Joint Venture
BPA
2839 Paces Ferry Road
Suite 900
Atlanta, GA 30339
Tel: 770-431-8666
Fax: 770-435-2666
www.arcadis-us.com

ATLANTA, GEORGIA
CITY OF ATLANTA
DEPARTMENT OF WATERSHED MANAGEMENT

EAST AREA WATER QUALITY CONTROL FACILITY IMPROVEMENTS

W.01.02.0085

SHEET TITLE

SLUDGE DEWATERING BUILDING SECTIONS

DATE:	JULY 2019
PROJECT NO.:	GABPA134
DESIGNED BY:	J. STEWART
DRAWN BY:	V. VIEIRA
CHECKED BY:	J. STEWART

SCALE: AS SHOWN

S-005

SHEET 55 OF 150

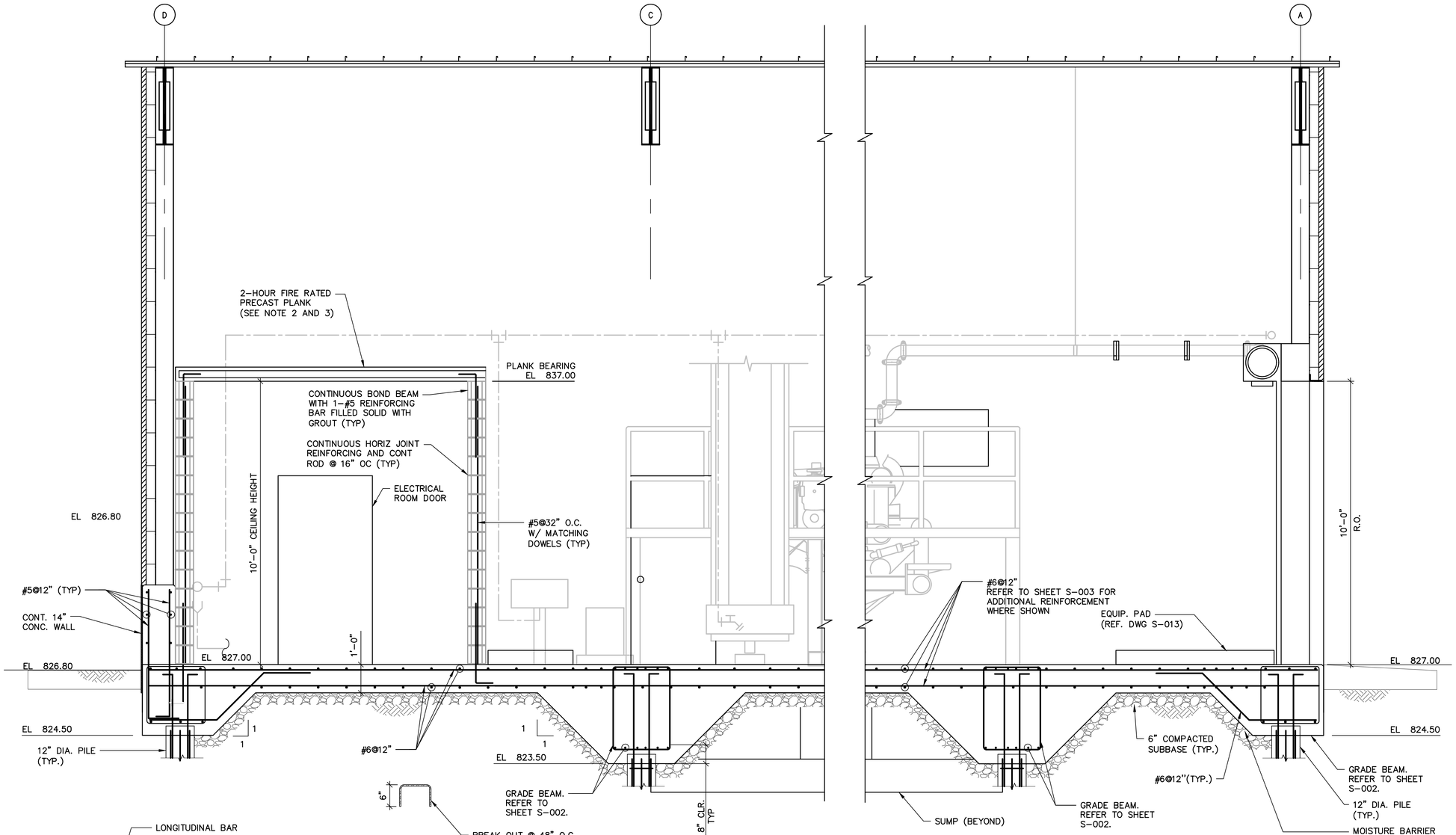

2 S-002 SLUDGE DEWATERING BUILDING – SECTION

SCALE: 1/2"= 1'-0"

0 1' 2' 4'

NOTES:
1. FOR MASONRY DETAILS AND REINFORCEMENT, SEE "S-013" SHEETS.
2. ELEC. ROOM ROOF LIVE LOAD = 100 PSF
3. CONTRACTOR SHALL SUBMIT UL TEST DATA WITH SELECTED PLANK MANUFACTURER'S DATA SHOWING 2-HOUR FIRE RATED ASSEMBLY ASSUME 8" HOLLOW-CONCRETE PLANK FOR BIDDING PURPOSES

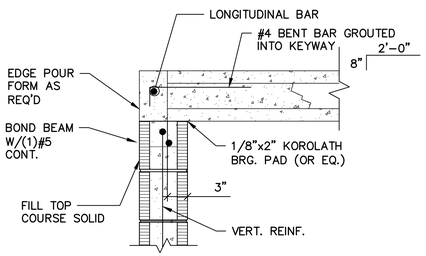

PRECAST ROOF DETAIL

SCALE: NO SCALE

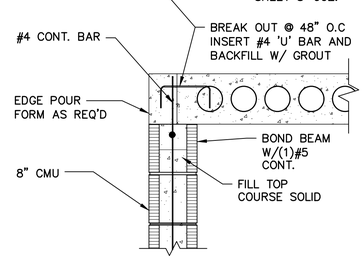

SINGLE LAP NON-BEARING CONDITION ON CMU

SCALE: NO SCALE

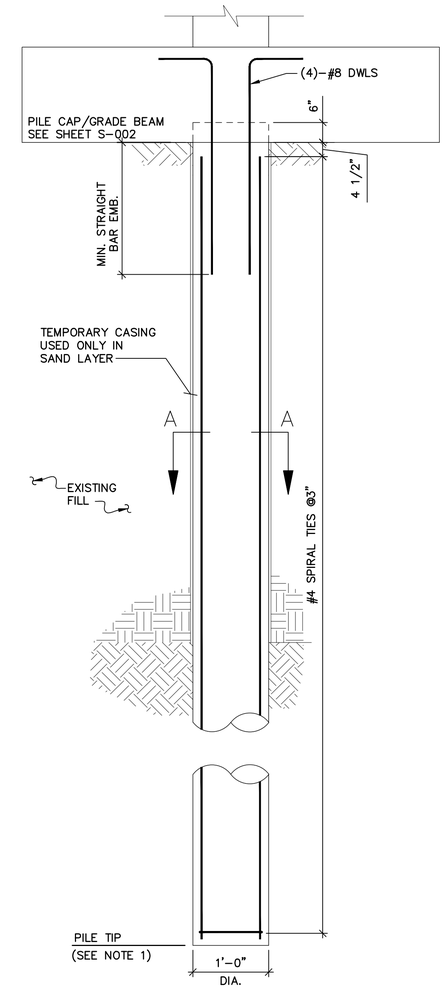

ELEVATION

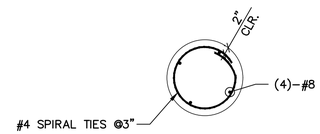

SECTION A-A

AUGER-CAST PILE DETAIL

NOT TO SCALE

NOTES:
1. AUGER-CAST PILES:
   - DESIGN CAPACITY = 75 TONS (VERTICAL) ,2 TON (LATERAL)
   - TIP EL = REFER TO GEO-TECHNICAL REPORT (MIN 10'-0" EMBEDMENT LENGTH OF PILE REQUIRED)
   - PILE DIAMETER = 12"
2. REFER TO GEO-TECHNICAL REPORT FOR MORE INFORMATION.
3. REFER TO SPEC 02370 FOR MORE INFORMATION.

COPYRIGHT: ARCADIS U.S., INC. 2016

IF THIS BAR IS NOT 1" INDICATED SCALE IS INCORRECT

NO.	DATE	ISSUED FOR	BY
0	JUL 2019	BIDDING	HG

SEALS

GEORGIA REGISTERED No. PE041058 PROFESSIONAL 7/31/19 ENGINEER HOUSAM HOBI

ARCADIS BPA A Joint Venture
2839 Paces Ferry Road
Suite 900
Atlanta, GA 30339
Tel: 770-431-8666
Fax: 770-435-2666
www.arcadis-us.com

ATLANTA, GEORGIA
CITY OF ATLANTA
DEPARTMENT OF WATERSHED MANAGEMENT

EAST AREA WATER QUALITY CONTROL FACILITY IMPROVEMENTS

W.01.02.0085

SHEET TITLE

SLUDGE DEWATERING BUILDING SECTIONS AND DETAILS

DATE:	JULY 2019
PROJECT NO.:	GABPA134
DESIGNED BY:	J. STEWART
DRAWN BY:	V. VIEIRA
CHECKED BY:	J. STEWART

SCALE: SHOWN

S-006

SHEET 56 OF 150

User:TTHOMAS Spec: AUS-NCSMOD File:I:\ACAD\PROJ\GABPA134 – CSO GROUP 1\BID PACKAGE 2\SHEETS\STRUCTURALS\S-006.DWG Scale:1:1 SavedDate:7/30/2019 Time:10:15 Plot Date: Thomas, Travis; 7/31/2019; 09:45 ; Layout:S6

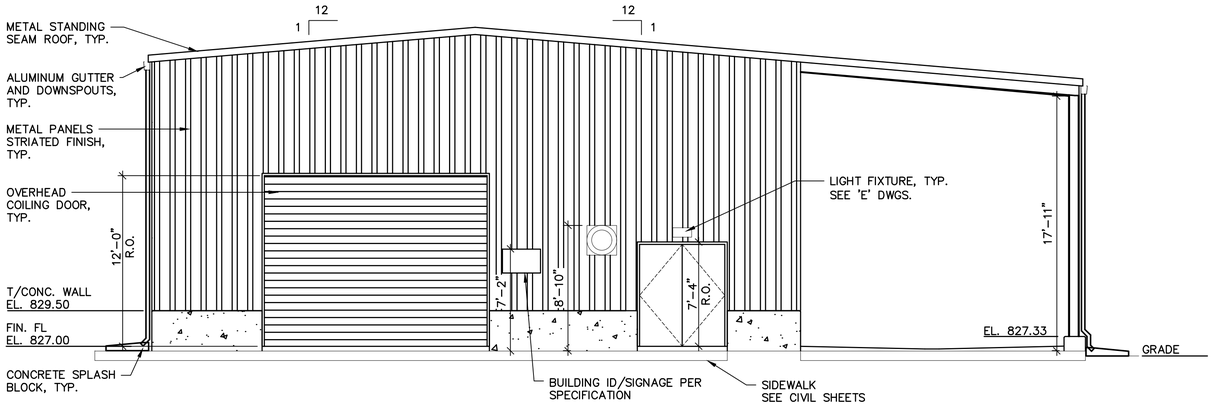

EAST ELEVATION

SCALE: 3/16" = 1'-0"

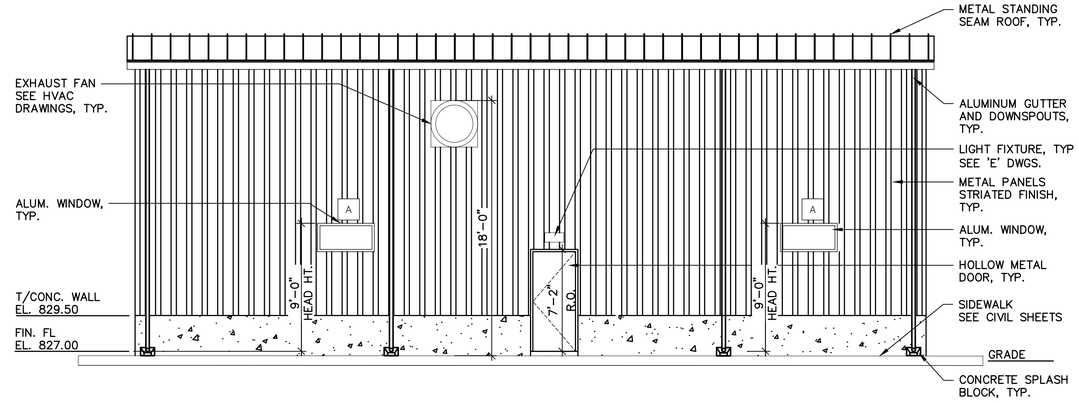

SOUTH ELEVATION

SCALE: 3/16" = 1'-0"

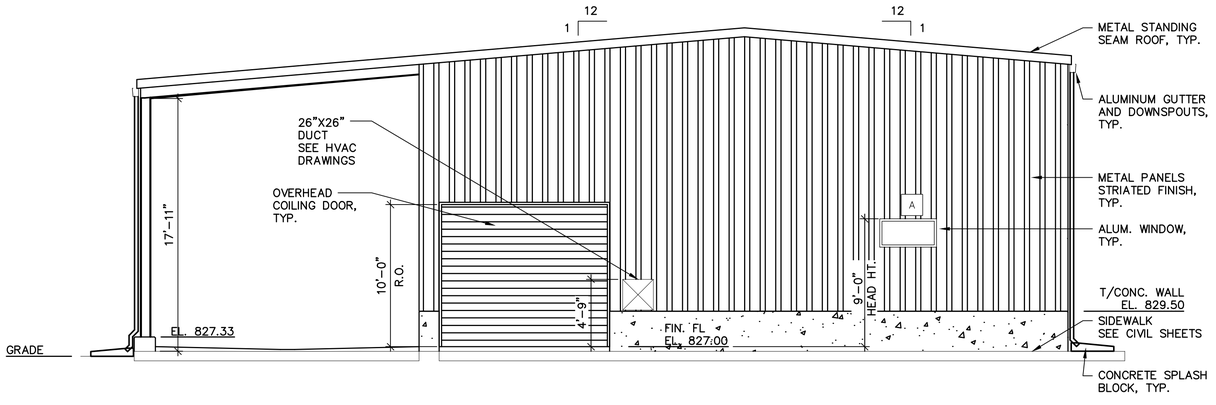

WEST ELEVATION

SCALE: 3/16" = 1'-0"

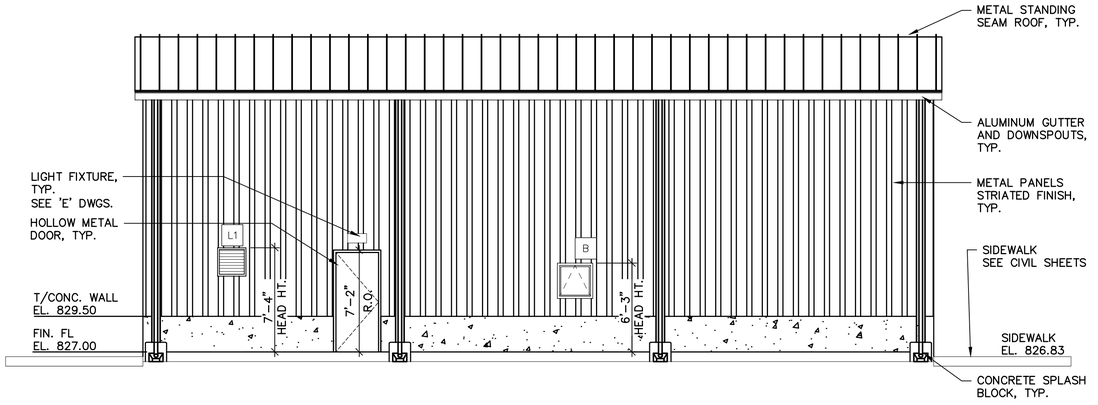

NORTH ELEVATION

SCALE: 3/16" = 1'-0"

COPYRIGHT: ARCADIS U.S., INC. 2016

IF THIS BAR IS NOT 1" INDICATED SCALE IS INCORRECT

NO.	DATE	ISSUED FOR	BY
0	JUL 2019	BIDDING	HG

SEALS

GEORGIA REGISTERED No. PE041058 PROFESSIONAL 7/31/19 ENGINEER HOUSAM HOBI

ARCADIS BPA A Joint Venture
2839 Paces Ferry Road
Suite 900
Atlanta, GA 30339
Tel: 770-431-8666
Fax: 770-435-2666
www.arcadis-us.com

ATLANTA, GEORGIA
CITY OF ATLANTA
DEPARTMENT OF WATERSHED MANAGEMENT

EAST AREA WATER QUALITY CONTROL FACILITY IMPROVEMENTS

W.01.02.0085

SHEET TITLE

SLUDGE DEWATERING BUILDING ELEVATIONS

DATE:	JULY 2019
PROJECT NO.:	GABPA134
DESIGNED BY:	J. STEWART
DRAWN BY:	V. VIEIRA
CHECKED BY:	J. STEWART

SCALE: 3/16" = 1'-0"

S-007

SHEET 57 OF 150

User:TTHOMAS Spec:AUS-NCSMOD File:I:\ACAD\PROJ\GABPA134 - CSO GROUP 1\BID PACKAGE 2\SHEETS\STRUCTURALS-007.DWG Scale:1:1 SavedDate:3/4/2019 Time:12:42 Plot Date: Thomas, Travis; 7/31/2019; 09:48 ; Layout:S7

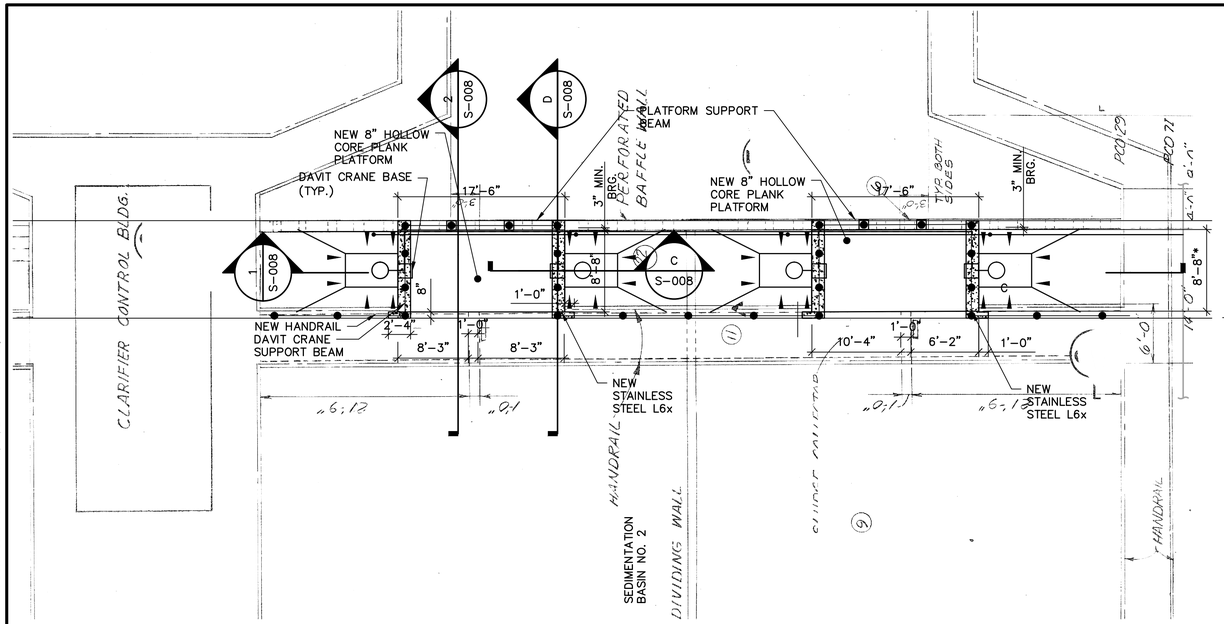

SEDIMENTATION SLUDGE COLLECTION SUMPS TOP PLAN (TYP. FOR 2)

SCALE: = 1/8" = 1'-0"

NOTES:

1. PLATFORM DESIGN LIVE LOAD = 300 PSF.
2. CONTRACTOR SHALL MODIFY THE RAILING AS REQUIRED.

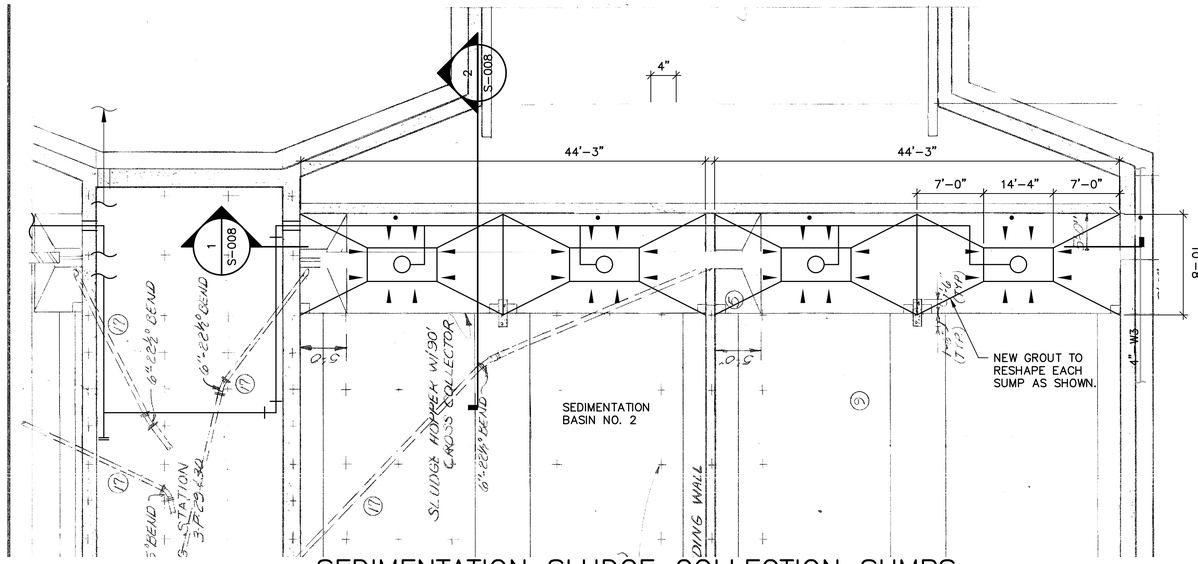

SEDIMENTATION SLUDGE COLLECTION SUMPS BOTTOM PLAN

SCALE: = 1/8" = 1'-0"

REFERENCE DRAWINGS: 3-P-22 AND 3-P-23 (1981 INTRENCHMENT CREEK COMBINED SEWER OVERFLOW TREATMENT FACILITY)

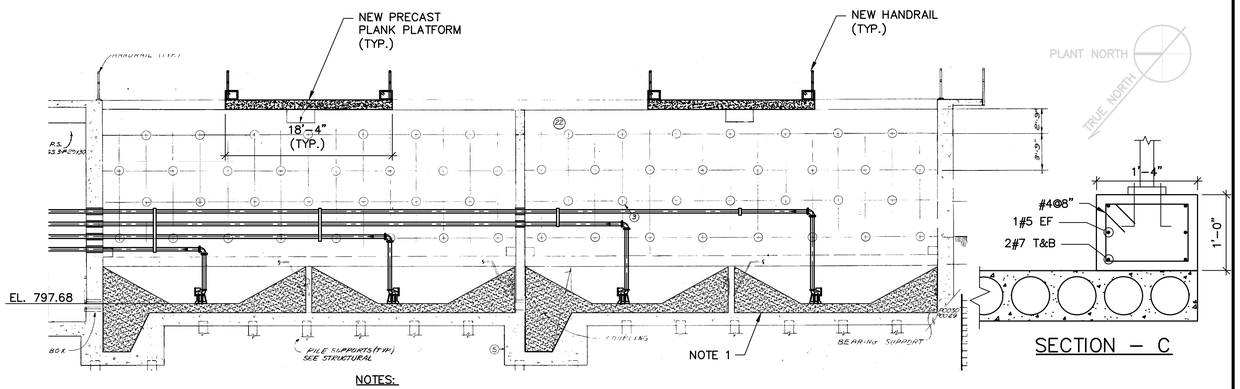

NOTES:

1. REFER TO M-005 FOR PUMP SUMP DIMENSIONS.

1 / S-008 SECTION (TYP. FOR 2)

SCALE: = 1/8" = 1'-0"

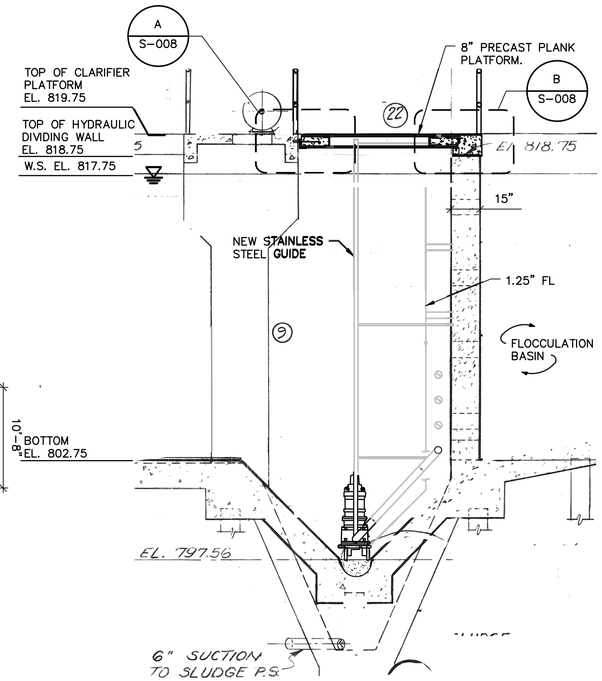

2 / S-008 SECTION

SCALE: = 1/4" = 1'-0"

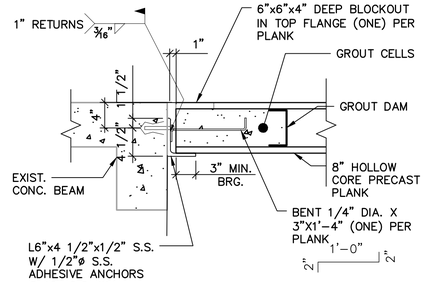

DETAIL A

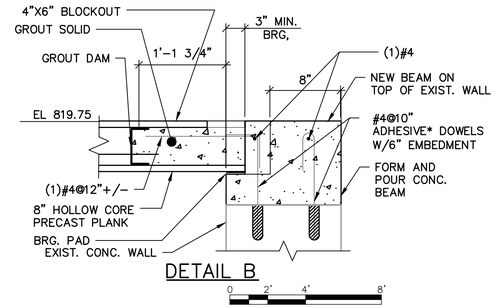

DETAIL B

REFERENCE DRAWINGS: 3-P-22, 3-P-25, 3-P-26 (1981 INTRENCHMENT CREEK COMBINED SEWER OVERFLOW TREATMENT FACILITY)

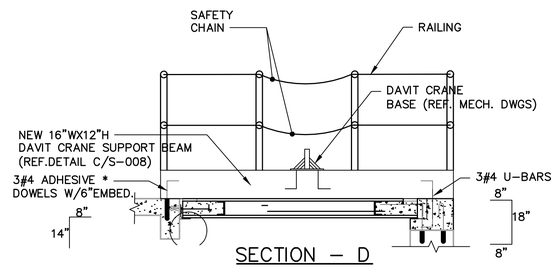

SECTION – D

* USE HILTI HIT-RE 500 V3 EPOXY ADHESIVE

COPYRIGHT: ARCADIS U.S., INC. 2016

IF THIS BAR IS NOT 1" INDICATED SCALE IS INCORRECT

NO.	DATE	ISSUED FOR	BY
0	JUL 2019	BIDDING	HG

SEALS

GEORGIA REGISTERED No. PE041058 PROFESSIONAL ENGINEER HOUSAM HOBI 7/31/19

ARCADIS
BPA
A Joint Venture
2839 Paces Ferry Road
Suite 900
Atlanta, GA 30339
Tel: 770-431-8666
Fax: 770-435-2666
www.arcadis-us.com

ATLANTA, GEORGIA
CITY OF ATLANTA
DEPARTMENT OF WATERSHED MANAGEMENT

EAST AREA WATER QUALITY CONTROL FACILITY IMPROVEMENTS

W.01.02.0085

SHEET TITLE

SED. BASINS PLAN, SECTIONS AND DETAILS (SUB. SLUDGE PUMP ADD.)

DATE:	JULY 2019
PROJECT NO.:	GABPA134
DESIGNED BY:	V. VIEIRA
DRAWN BY:	V. VIEIRA
CHECKED BY:	J. STEWART

SCALE: 1/8"=1'

S-008

SHEET 58 OF 150

User: JSAIREYANEZ Spec: AUS-NCSMOD File: G:\GA02\DATA\AUTOCAD\ACAD\PRO\GABPA134 - CSO GROUP 1\BID PACKAGE 2\SHEETS\STRUCTURAL\S-008.DWG Scale: 1:1 SavedDate: 7/31/2019 Time: 10:22 Plot Date: Saire Yanez, Julio: 7/31/2019; 10:23 ; Layout: S8

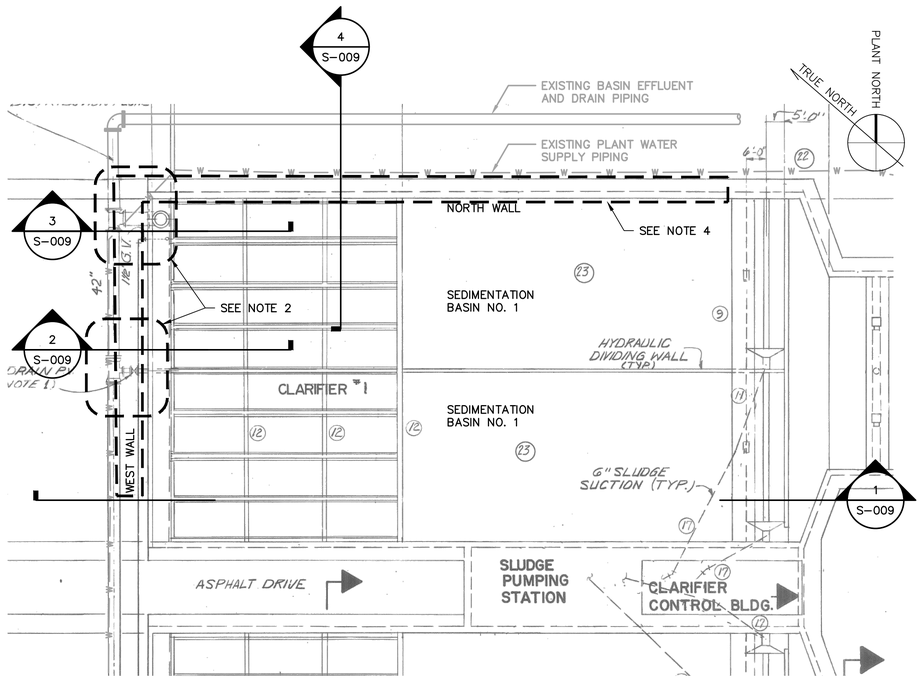

PLAN
SCALE: N.T.S.

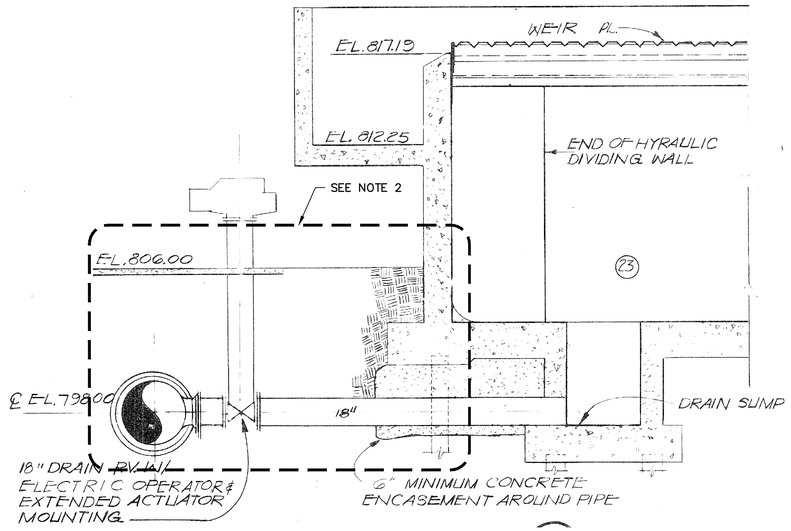

2 S-009 SECTION
SCALE: N.T.S.

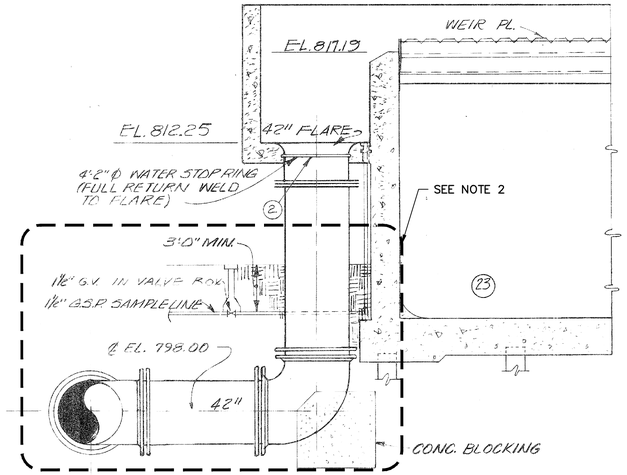

3 S-009 SECTION
SCALE: N.T.S.

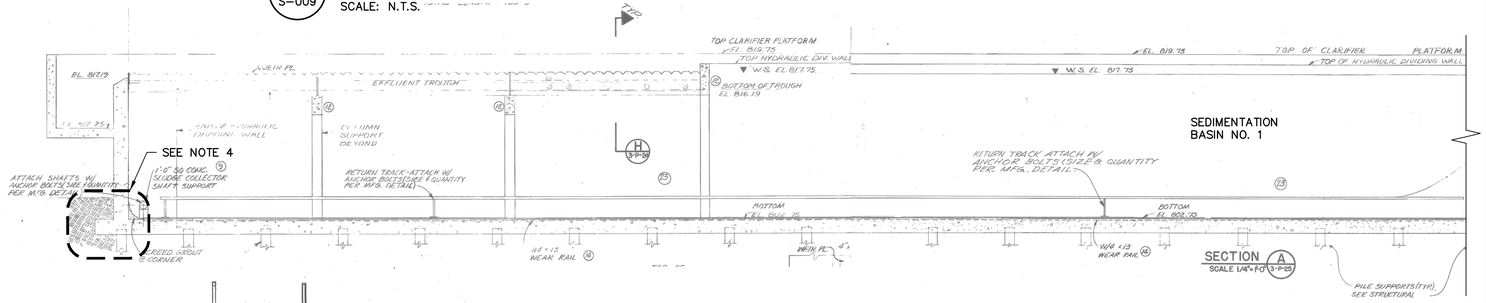

1 S-009 SECTION
SCALE: N.T.S.

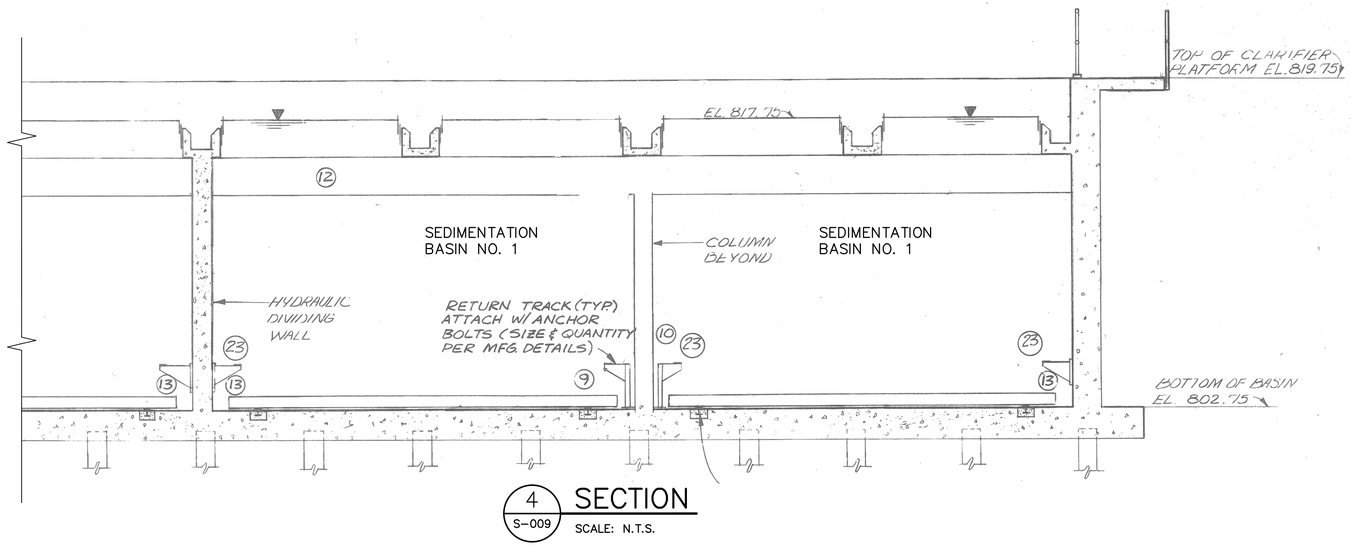

4 S-009 SECTION
SCALE: N.T.S.

NOTES:

1. THERE IS AN APPARENT WATER LEAK FROM THE EXISTING SETTLING BASIN 1. THE LEAK APPEARS TO BE IN THE VICINITY OF THE AREA TO THE NORTH AND WEST OF THE BASINS. SEE PLAN VIEW ON THIS SHEET.
2. CONTRACTOR SHALL EXCAVATE IN THE AREAS AROUND THE EXISTING BASIN EFFLUENT AND DRAIN PIPING/FITTING/VALVE JOINTS, IN THIS AREA, AND PERFORM PIPING PRESSURE TESTS AND VISUAL INSPECTIONS TO DETERMINE IF THIS PIPE OR VALVES ARE THE SOURCE OF THE APPARENT WATER LEAK.
3. CONTRACTOR SHALL EXCAVATE IN THE AREAS AROUND THE EXISTING PLANT WATER SUPPLY PIPING AND FITTINGS, IN THIS AREA, AND PERFORM PIPING PRESSURE TESTS AND VISUAL INSPECTIONS TO DETERMINE IF THIS PIPE OR VALVES ARE THE SOURCE THE APPARENT WATER LEAK.
4. CONTRACTOR SHALL EXPOSE TO VIEW AND CLEAN AS NECESSARY, BOTH THE INTERIOR AND EXTERIOR FACES OF THE NORTH AND WEST WALLS OF SETTLING BASIN 1, AND PERFORM A VISUAL INSPECTION AND HYDROSTATIC TESTING OF SETTLING BASIN 1, TO DETERMINE THE PRESENCE OF WATER LEAKS.
5. CONTRACTOR TO PERFORM PIPING HYDROSTATIC PRESSURE TESTS AND VISUAL INSPECTIONS OF THE PIPING CONNECTIONS TO THE EXISTING BASIN.
6. FOLLOWNG THE IDENTIFICATION OF ALL LEAKS, THE CONTRACTOR SHALL PROPOSE LEAK REPAIR METHODS AND COST, TO THE ENGINEER FOR REVIEW.
7. CONTRACTOR TO REPAIR ANY PIPING OR WALL LEAKS FOUND, UTILIZING METHODS APPROVED BY THE ENGINEER AND THE CITY.
8. PAYMENT FOR EXCAVATION, CLEANING, HYDROSTATIC TESTING, INSPECTION, LEAK SOURCE DETERMINATION, REPAIR PLAN PREPARATION, AND REPAIR OF ALL APPROVED PIPING OR WALL LEAKS, SHALL BE PAID FOR UNDER THE ALLOWANCE ITEM ENTITLED SEDIMENTATION BASIN LEAK IDENTIFICATION AND REPAIR, IN THE BID SCHEDULE.
9. CONTRACTOR TO PERFORM REPAIR WORK ONLY AFTER RECEIVING A WRITTEN APPROVAL BY THE CITY.

REFERENCE DRAWINGS: 3-P-17, 3-P-24, 3-P-25, 3-P-26 (1981 INTRENCHMENT CREEK COMBINED SEWER OVERFLOW TREATMENT FACILITY)

COPYRIGHT: ARCADIS U.S., INC. 2016

IF THIS BAR IS NOT 1" INDICATED SCALE IS INCORRECT

NO.	DATE	ISSUED FOR	BY
0	JUL 2019	BIDDING	HG

SEALS

GEORGIA REGISTERED No. PE041058 PROFESSIONAL 7/31/19 ENGINEER HOUSAM HOBI

ARCADIS BPA A Joint Venture
2839 Paces Ferry Road
Suite 900
Atlanta, GA 30339
Tel: 770-431-8666
Fax: 770-435-2666
www.arcadis-us.com

ATLANTA, GEORGIA
CITY OF ATLANTA
DEPARTMENT OF WATERSHED MANAGEMENT

EAST AREA WATER QUALITY CONTROL FACILITY IMPROVEMENTS

W.01.02.0085

SHEET TITLE

SEDIMENTATION BASINS PLAN, SECTIONS, AND DETAILS (BASIN LEAK)

DATE:	JULY 2019
PROJECT NO.:	GABPA134
DESIGNED BY:	J. STEWART
DRAWN BY:	V. VIEIRA
CHECKED BY:	J. STEWART

SCALE: NONE

S-009

SHEET 59 OF 150

User: TTHOMAS Spec: AUS-NCSM0D File: I:\ACAD\PROJ\GABPA134 - CSO GROUP 1\BID PACKAGE 2\SHEETS\STRUCTURAL\S-009.DWG Scale: 1:1 SavedDate: 8/8/2018 Time: 13:48 Plot Date: Thomas, Travis; 7/31/2019; 09:52 ; Layout: S9

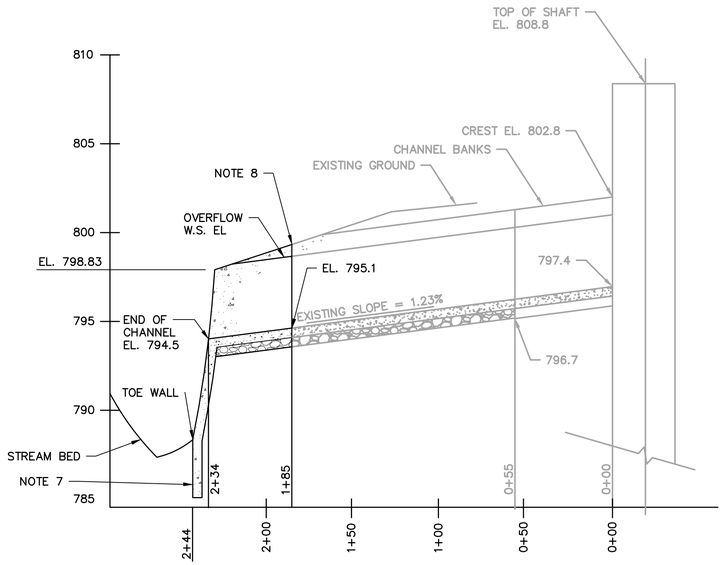

PROFILE OF EMERGENCY OUTLET CHANNEL AT PUMP SHAFT

NOT TO SCALE

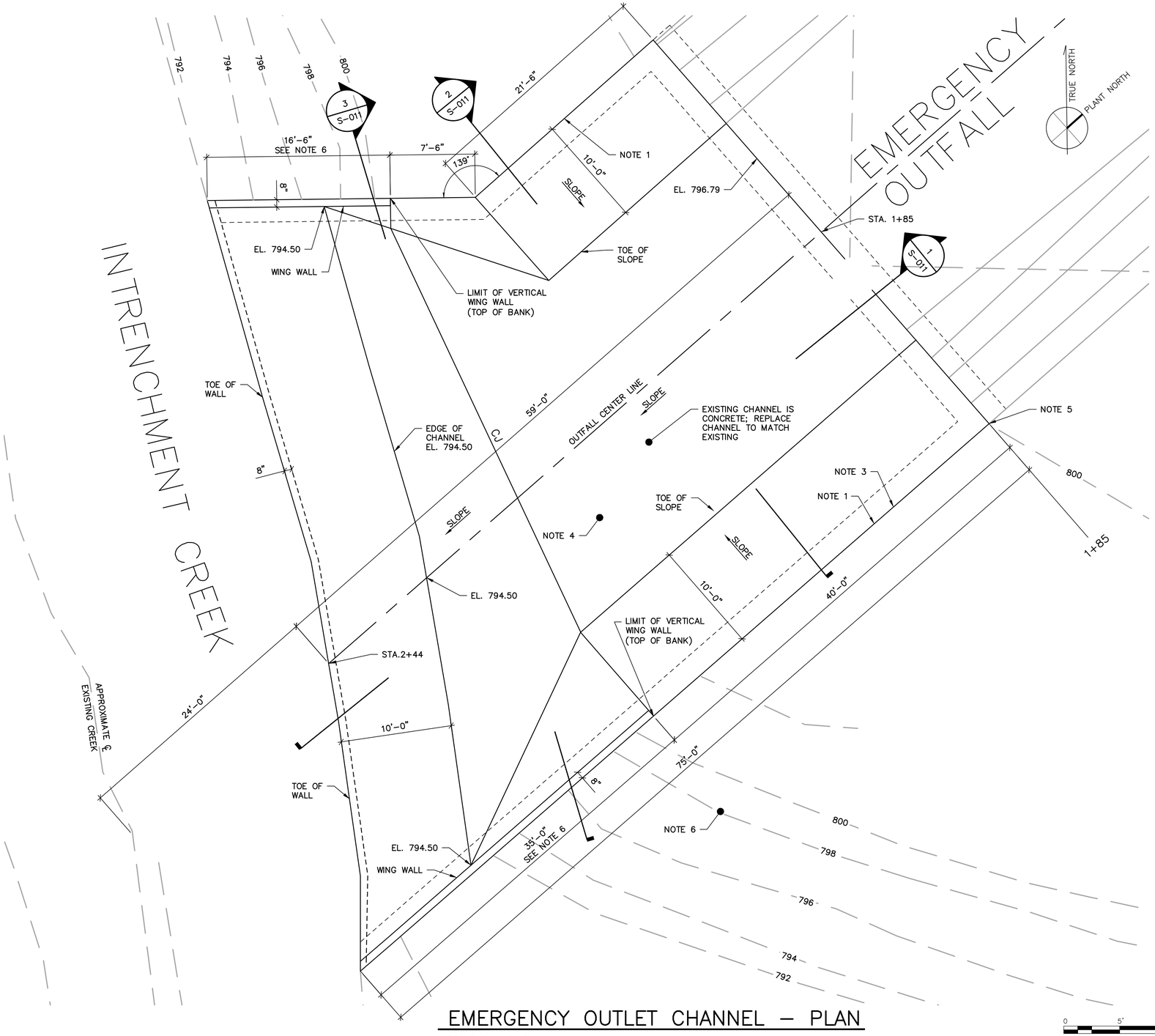

EMERGENCY OUTLET CHANNEL – PLAN

SCALE: 1" = 5'-0"

0 5' 10'

NOTES:

1. CLEAR AND GRUB 5' WIDE EXTENT ON EITHER SIDE OF CHANNEL DESIGNATED FOR REPLACEMENT.
2. TOE WALL SHALL EXTEND 3–FEET BELOW CREEK BED.
3. DEMOLISH AND REPLACE EXISTING CHANNEL AT EXISTING SLOPE.
4. REPLACE ALL EXISTING ENERGY DISSIPATERS IN TRAPEZOIDAL CONCRETE CHANNEL EXTENT DESIGNATED FOR REPLACEMENT.
5. EXISTING CHANNEL IS ALL CONCRETE. PROPOSED DEMOLITION AND REPLACEMENT COMMENCES HERE AND CONTINUES TO CONFLUENCE WITH STREAM BED.
6. RESTORE GRADING ADJACENT TO CHANNEL REPLACEMENT TO MATCH EXISTING CONDITIONS.
7. DURING REPLACEMENT OF EXISTING TOE–WALL, INSTALL TOE–WALL EXTENSION 3' BELOW STREAM BED ELEVATION AT EXISTING THICKNESS. COVER AND RESTORE STREAM BED ELEVATION TO EXISTING CONDITIONS FOLLOWING INSTALLATION.
8. DEMOLISH AND REPLACE EXISTING CHANNEL FROM STA. 1+85 TO JOINT NEAREST 2+44.
9. PROVIDE CONSTRUCTION JOINT (CJ) AS SHOWN.

REFERENCE DRAWINGS: 2A–C–1 THROUGH 2A–C3 (1981, CITY OF ATLANTA INTRENCHMENT CREEK CSO TREATMENT PLANT

COPYRIGHT:
ARCADIS U.S., INC.
2016

IF THIS BAR IS NOT 1" INDICATED SCALE IS INCORRECT

NO.	DATE	ISSUED FOR	BY
0	JUL 2019	BIDDING	HG

SEALS

GEORGIA REGISTERED No. PE041058 PROFESSIONAL 7/31/19 ENGINEER HOUSAM HOBI

ARCADIS
BPA
A Joint Venture
2839 Paces Ferry Road
Suite 900
Atlanta, GA 30339
Tel: 770–431–8666
Fax: 770–435–2666
www.arcadis–us.com

ATLANTA, GEORGIA
CITY OF ATLANTA
DEPARTMENT OF WATERSHED MANAGEMENT

EAST AREA WATER QUALITY CONTROL FACILITY IMPROVEMENTS

W.01.02.0085

SHEET TITLE

TUNNEL PUMP STATION OUTFALL REPAIR PLAN AND PROFILE

DATE:	JULY 2019
PROJECT NO.:	GABPA134
DESIGNED BY:	J. STEWART
DRAWN BY:	V. VIEIRA
CHECKED BY:	J. STEWART

SCALE: AS SHOWN

S–010

SHEET 60 OF 150

User: TTHOMAS Spec: AUS–NCSM3D File: I:\ACAD\PROJ\GABPA134 – CSO GROUP 1\BID PACKAGE 2\SHEETS\STRUCTURAL\S–010.DWG Scale:1:1 SavedDate:7/29/2019 Date:7/29/2019 Time:13:35 Plot Date: Thomas, Travis; 7/31/2019; 09:54 ; Layout:60

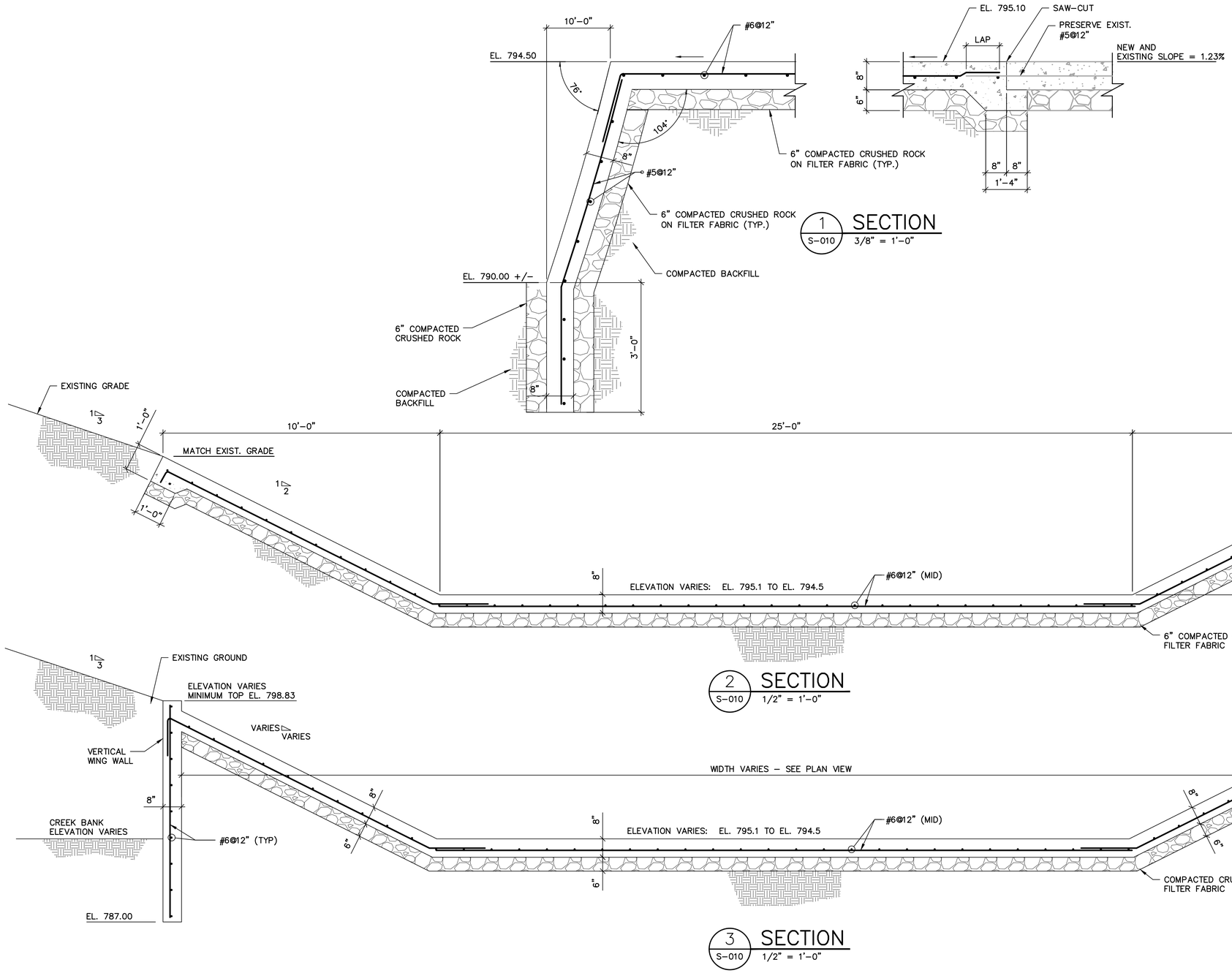

1 / S-010 SECTION 3/8" = 1'-0"

2 / S-010 SECTION 1/2" = 1'-0"

3 / S-010 SECTION 1/2" = 1'-0"

COPYRIGHT: ARCADIS U.S., INC. 2016

IF THIS BAR IS NOT 1" INDICATED SCALE IS INCORRECT

NO.	DATE	ISSUED FOR	BY
0	JUL 2019	BIDDING	HG

SEALS

GEORGIA REGISTERED No. PE041058 PROFESSIONAL 7/31/19 ENGINEER HOUSAM HOBI

ARCADIS A Joint Venture
BPA
2839 Paces Ferry Road
Suite 900
Atlanta, GA 30339
Tel: 770-431-8666
Fax: 770-435-2666
www.arcadis-us.com

ATLANTA, GEORGIA
CITY OF ATLANTA
DEPARTMENT OF WATERSHED MANAGEMENT

EAST AREA WATER QUALITY CONTROL FACILITY IMPROVEMENTS

W.01.02.0085

SHEET TITLE

TUNNEL PUMP STATION OUTFALL REPAIR SECTION

DATE:	JULY 2019
PROJECT NO.:	GABPA134
DESIGNED BY:	J. STEWART
DRAWN BY:	V. VIEIRA
CHECKED BY:	J. STEWART

SCALE: AS SHOWN

S-011

SHEET 61 OF 150

User: TTHOMAS Spec: AUS-NCSMOD File: I:\ACAD\PROJ\GABPA134 - CSO GROUP 1\BID PACKAGE 2\SHEETS\STRUCTURAL\S-011.DWG Scale: 1:1 SavedDate: 3/8/2019 Time: 17:13 Plot Date: Thomas, Travis; 7/31/2019, 09:56 : Layout: 61

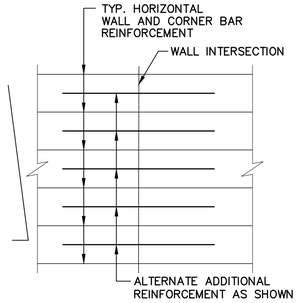

TYP. DEVELOPED ELEVATION
AT WALL INTERSECTION

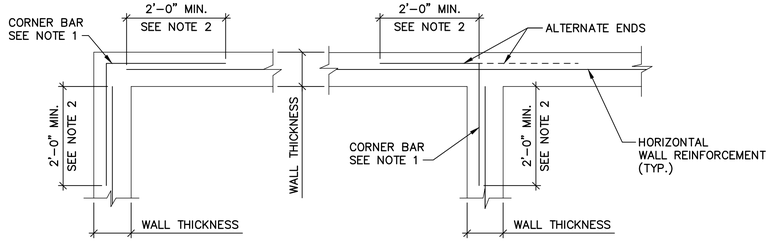

TYP. PLAN TYP. PLAN

TYPICAL REINFORCEMENT DETAIL AT SINGLY REINFORCED WALL INTERSECTIONS

NOTES:
1. CORNER BARS TO MATCH SIZE AND SPACING OF WALL HORIZONTAL REINFORCEMENT (U.O.N.).
2. DIMENSION TO BE 0.25 TIMES THE CLEAR SPAN DISTANCE BETWEEN WALL INTERSECTIONS MEASURED HORIZONTALLY, BUT NO LESS THAN 2'-0" NOR GREATER THAN 6'-0".

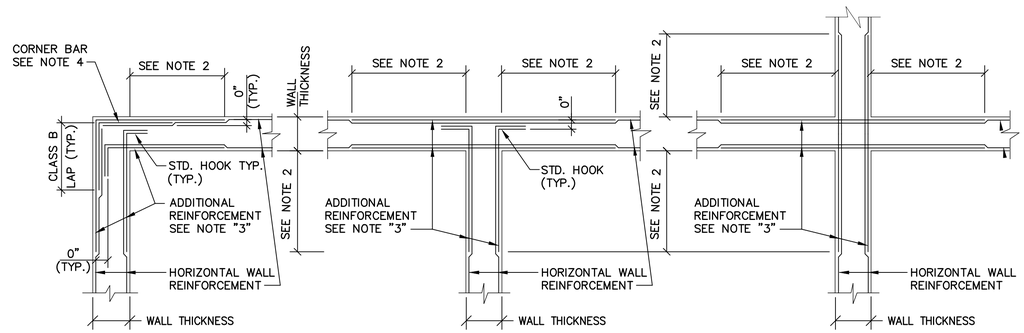

TYP. PLAN TYP. PLAN TYP. PLAN

EQQEQ

TYPICAL REINFORCEMENT DETAIL AT WALL INTERSECTIONS

NOTES:
1. PROVIDE ADDITIONAL REINFORCING AT ALL WALL INTERSECTIONS AS SHOWN ABOVE U.O.N. ON DWGS.
2. DIMENSION TO BE 0.25 TIMES THE CLEAR SPAN DISTANCE BETWEEN WALL INTERSECTIONS MEASURED HORIZONTALLY, BUT NOT LESS THAN 2'-0", NOR GREATER THAN 6'-0".
3. ADDITIONAL REINFORCEMENT TO MATCH SIZE AND SPACING OF WALL HORIZONTAL REINFORCEMENT (U.O.N.). ALTERNATE ADDITIONAL REINFORCEMENT WITH HORIZONTAL WALL REINFORCEMENT.
4. PROVIDE CORNER BAR REINFORCING AT ALL WALL CORNERS AS SHOWN. CORNER BAR REINFORCEMENT TO MATCH SIZE AND SPACING OF WALL HORIZONTAL REINFORCEMENT.
5. WHERE LAPPING OF ADDITIONAL REINFORCEMENT FROM ADJACENT WALL INTERSECTION OCCURS, REINFORCEMENT SHALL BE COMBINED.
6. TYPICAL WALL INTERSECTION DETAILS ARE SHOWN AT 90 DEGREES, BUT ARE APPLICABLE FROM 60 TO 120 DEGREES.

TYPICAL CONCRETE WALL BACKFILL DETAIL

NOTES:
1. REFER TO SPECIFICATIONS FOR EXCAVATION REQUIREMENTS.
2. TYPICAL BACKFILL REQUIREMENTS FOR ALL BELOW GRADE STRUCTURES. STRUCTURES.

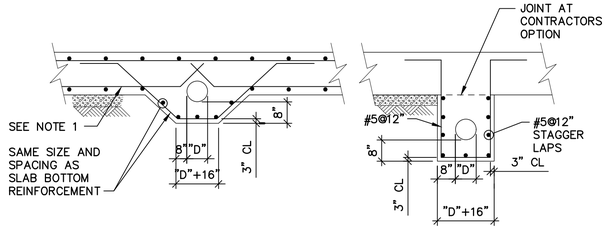

PIPE ENCASEMENT DETAIL

NOTES:
1. BOTTOM REINFORCEMENT TO BE CONTINUOUS WHERE POSSIBLE.
2. FOR PIPE SIZE "D" AND ELEVATION, SEE MECHANICAL OR PLUMBING DRAWINGS.
3. ALL PIPES LOCATED BENEATH BASE SLABS SHALL BE ENCASED IN CONCRETE UNLESS OTHERWISE NOTED.
4. THIS DETAIL SHALL ONLY BE USED FOR PIPES THAT CONTAIN HORIZONTAL RUNS THAT ARE PARTIALLY INSTALLED WITHIN THE CONCRETE FLOOR SLAB. FOR ALL OTHER PIPES BENEATH CONCRETE FLOOR SLABS.

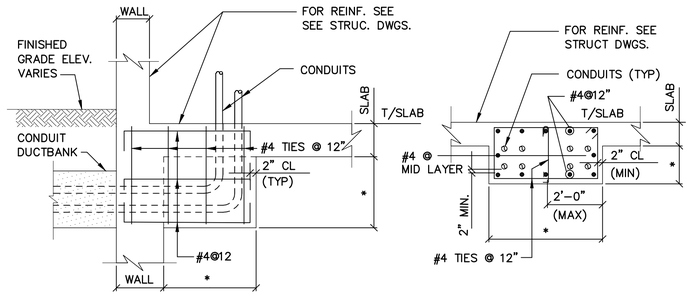

AT WALL BELOW ELEVATED SLAB

TYPICAL CONDUIT ENCASEMENT DETAIL

NOTES:
1. REFER TO SPECIFICATION SECTION 03300 FOR COORDINATION OF CONCRETE WITH OTHER CONTRACTORS.
2. (*) INDICATES DIMENSION TO BE DETERMINED BASED ON FIELD CONDITIONS.

COPYRIGHT:
ARCADIS U.S., INC.
2016

IF THIS BAR IS NOT 1" INDICATED SCALE IS INCORRECT

NO.	DATE	ISSUED FOR	BY
0	JUL 2019	BIDDING	HG

SEALS

GEORGIA REGISTERED No. PE041058 PROFESSIONAL 7/31/19 ENGINEER HOUSAM HOBI

ARCADIS
BPA
A Joint Venture
2839 Paces Ferry Road
Suite 900
Atlanta, GA 30339
Tel: 770-431-8666
Fax: 770-435-2666
www.arcadis-us.com

ATLANTA, GEORGIA
CITY OF ATLANTA
DEPARTMENT OF WATERSHED MANAGEMENT

EAST AREA WATER QUALITY CONTROL FACILITY IMPROVEMENTS

W.01.02.0085

SHEET TITLE

STRUCTURAL TYPICAL DETAILS 1

DATE:	JULY 2019
PROJECT NO.:	GABPA134
DESIGNED BY:	J. STEWART
DRAWN BY:	V. VIEIRA
CHECKED BY:	J. STEWART

SCALE: AS NOTED

S-012

SHEET 62 OF 150

User:TTHOMAS Spec:AUS-NCSMOD File:I:\ACAD\PROJ\GABPA134 - CSO GROUP 1\BID PACKAGE 2\SHEETS\STRUCTURAL\S-012.DWG Scale:1:1 SavedDate:8/8/2018 Time:14:47 Plot Date: Thomas, Travis; 7/31/2019; 09:57 ; Layout:62

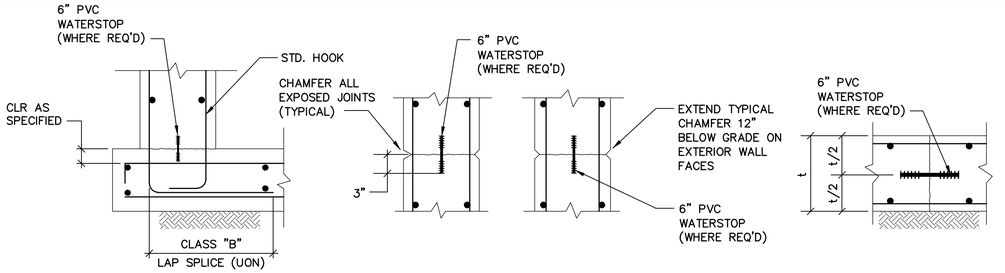

TYPICAL CONSTRUCTION JOINT DETAILS

NOTES:
1. CONTINUE ALL REINFORCEMENT BARS THRU JOINTS.
2. ROUGHEN CJ AS SPECIFED

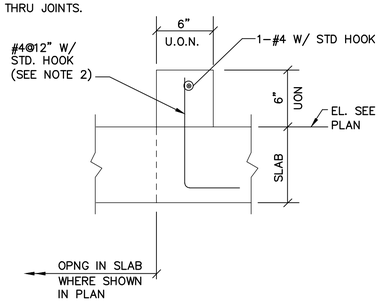

TYPICAL CONCRETE CURB DETAIL

NOTES:
1. PROVIDE MIN REINFORCING AS SHOWN ABOVE IN ALL CURBS (UON).
2. FOR EXISTING SLABS, DRILL HOLE DIAMETER AND DEPTH ON EXISTING SLAB PER MANUFACTURER'S REQUIREMENTS FOR ADHESIVE ANCHORAGE SYSTEM USED.

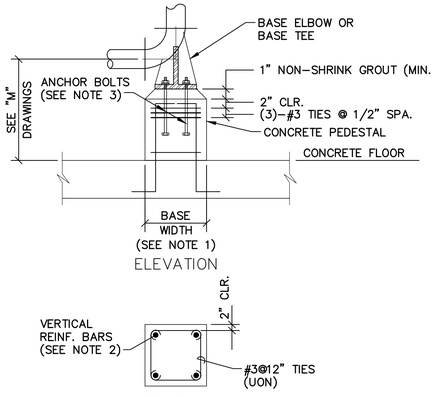

TYPICAL CONCRETE PEDESTAL PIPE SUPPORT DETAIL

SCALE: NO SCALE

NOTES:
1. BASE WIDTH SHALL BE A MINIMUM OF BASE ELBOW OR BASE TEE WIDTH PLUS 2 INCHES ON ALL SIDES OR A WIDTH TO PROVIDE A MINIMUM EDGE DISTANCE OF 5 INCHES ON ALL ANCHOR BOLTS.
2. PROVIDE VERTICAL REINFORCING BARS EQUALLY DISTRIBUTED ON ALL FACES OF SUPPORT PEDESTAL. PROVIDE (SEE NOTE 4):
   8-#5 BARS FOR A BASE WIDTH LESS THAN 16 INCHES.
   8-#6 BARS FOR A BASE WIDTH OF 16 INCHES BUT NOT LESS THAN 20 INCHES.
   8-#7 BARS FOR A BASE WIDTH OF 20 INCHES OR GREATER.
3. ANCHOR BOLT SIZE PER PIPE SUPPORT REQUIREMENT.
4. FOR EXISTING SLABS, DRILL HOLE DIAMETER AND DEPTH IN EXISTING SLAB PER MANUFACTURER'S REQUIREMENTS FOR ADHESIVE ANCHORAGE SYSTEM USED.

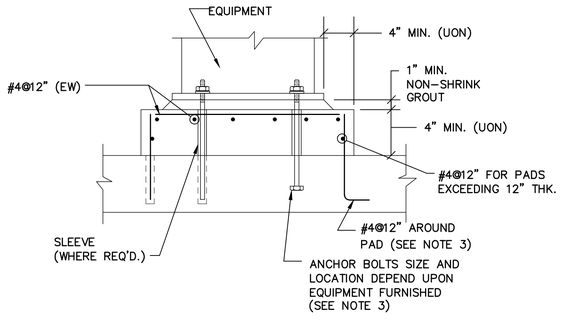

TYPICAL EQUIPMENT SUPPORT PAD DETAIL

NOTES:
1. PROVIDE TYP. 4" MINIMUM CONCRETE SUPPORT PAD FOR ALL EQUIPMENT UNLESS OTHERWISE NOTED.
2. COORDINATE LOCATION AND SIZE OF PADS WITH OTHER DRAWINGS AND MANUFACTURER'S CERTIFIED DRAWINGS.
3. FOR EXISTING SLABS, DRILL HOLE DIAMETER AND DEPTH IN EXISTING SLAB PER MANUFACTURER'S REQUIREMENTS FOR ADHESIVE ANCHORAGE SYSTEM USED.
4. SEE ELECTRICAL SHEETS FOR OTHER SPECIFIC ELECTRICAL EQUIPMENT PAD REQUIREMENTS AND EMBEDDED ITEMS.

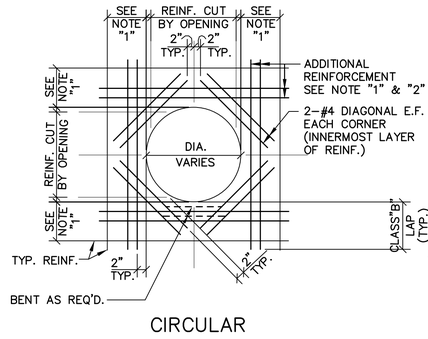

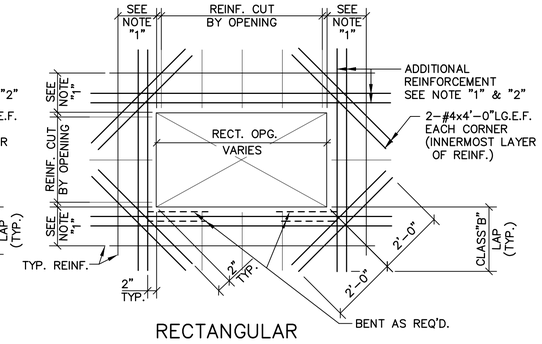

TYPICAL REINFORCING AROUND OPENING IN WALL AND SLAB

NOTES:
1. PROVIDE ADDITIONAL REINFORCEMENT AT ALL OPNGS, ACCESS HATCHES, PIPE PENETRATIONS, ETC. EQUAL IN AREA TO TYPICAL REINFORCEMENT CUT BY OPENING IN EACH DIRECTION. ADDITIONAL REINFORCEMENT TO MATCH SIZE OF TYPICAL REINFORCEMENT (MIN. 2 BARS E.F.) AND PLACED BETWEEN TYPICAL REINFORCEMENT ON EACH SIDE OF OPENING
2. PROVIDE MATCHING DWLS. WHERE REQ'D. TO PROVIDE CLASS "B" LAP WITH ADDITIONAL. REINF.

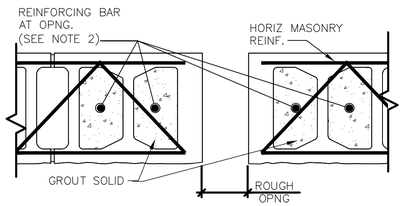

TYPICAL MASONRY OPENING DETAIL

(SINGLE WYTHE)

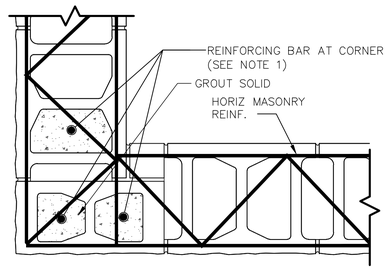

MASONRY CORNER DETAIL

(SINGLE WYTHE)

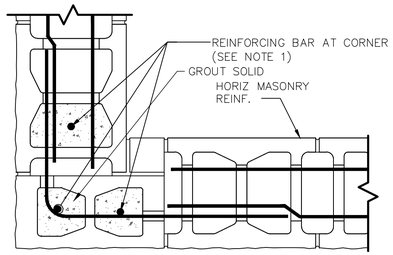

MASONRY CORNER DETAIL AT BOND BEAM

(SINGLE WYTHE)

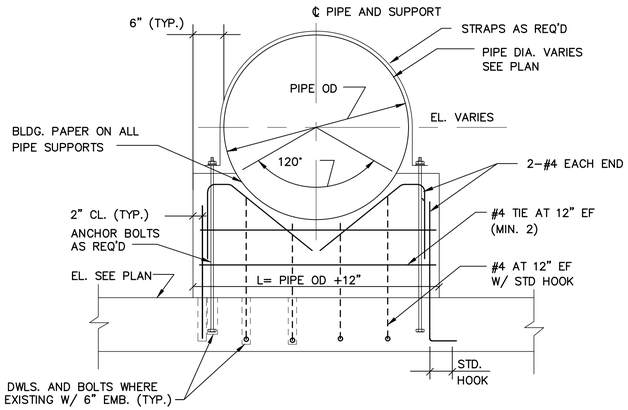

TYPICAL SINGLE PIPE CONCRETE SUPPORT DETAIL

NOTES:
1. SUPPORT TO BE 12" THICK (UON).
2. COORDINATE LOCATION OF PIPE SUPPORTS WITH OTHER SHEETS AND SPECIFICATIONS.
3. PROVIDE STRAP OF THE SAME FERROUS MATERIAL AS THE PIPE.

NOTES:
1. MINIMUM 3-FULL HEIGHT CONTINUOUS VERTICAL BAR WITH MATCHING DOWEL TO MATCH SIZE OF TYPICAL WALL REINFORCING.
2. MINIMUM 2-FULL HEIGHT CONTINUOUS VERTICAL BAR WITH MATCHING DOWEL TO MATCH SIZE OF TYPICAL WALL REINFORCING (UON). PROVIDE 1" DIAMETER HOLE IN LINTELS TO FACILITATE CONTINUOUS VERTICAL REINFORCEMENT.
3. FIRST LAYER AND ADDITIONAL LAYER OF HORIZONTAL TRUSS-TYPE REINFORCEMENT ABOVE AND BELOW ALL OPENINGS SHALL BE CONTINUOUS THROUGH CONTROL JOINTS. ALL OTHER LAYERS OF HORIZONTAL TRUSS-TYPE REINFORCEMENT SHALL NOT BE CONTINUOUS AT THE CONTROL JOINTS.
4. DETAIL SHALL APPLY TO ALL OPENINGS GREATER THAN 12" AND ALL DOOR OPENINGS.

COPYRIGHT: ARCADIS U.S., INC. 2016

IF THIS BAR IS NOT 1" INDICATED SCALE IS INCORRECT

NO.	DATE	ISSUED FOR	BY
0	JUL 2019	BIDDING	HG

SEALS

GEORGIA REGISTERED No. PE041058 PROFESSIONAL 7/31/19 ENGINEER HOUSAM HOBI

ARCADIS BPA A Joint Venture
2839 Paces Ferry Road
Suite 900
Atlanta, GA 30339
Tel: 770-431-8666
Fax: 770-435-2666
www.arcadis-us.com

ATLANTA, GEORGIA
CITY OF ATLANTA
DEPARTMENT OF WATERSHED MANAGEMENT

EAST AREA WATER QUALITY CONTROL FACILITY IMPROVEMENTS

W.01.02.0085

SHEET TITLE

STRUCTURAL TYPICAL DETAILS 2

DATE:	JULY 2019
PROJECT NO.:	GABPA134
DESIGNED BY:	J. STEWART
DRAWN BY:	V. VIEIRA
CHECKED BY:	J. STEWART

SCALE: NONE

S-013

SHEET 63 OF 150

User: THOMAS Spec: AUS-NCSM0D File: I:\ACAD\PROJ\GABPA134 - CSO GROUP 1\BID PACKAGE 2\SHEETS\STRUCTURAL\S-013.DWG Scale:1:1 SavedDate:7/29/2019 Time:13:45 Plot Date: Thomas, Travis; 7/31/2019; 09:59 ; Layout:63

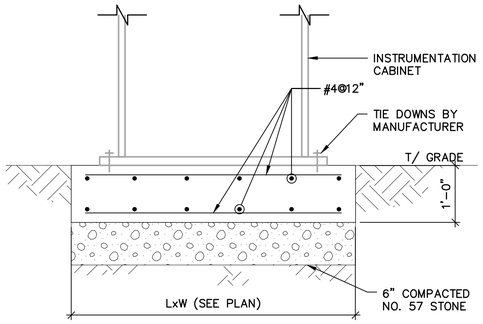

SECTION C–C

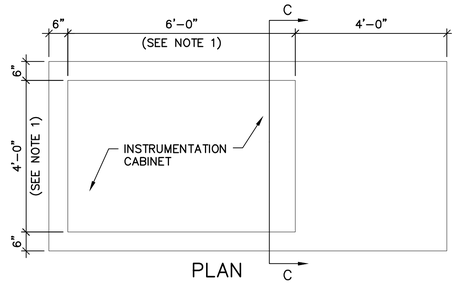

INSTRUMENT CABINET DETAIL

SCALE: NO SCALE

NOTES:
1. DIMENSIONS SHALL BE CONFIRMED WITH EQUIPMENT FURNISHED.
2. ALLOWABLE BEARING PRESSURE = 1,500 PSF

TYPICAL ANCHOR BOLT DETAIL

NOTE:
1. REFER TO SPECIFICATIONS FOR ANCHOR BOLT MATERIAL REQUIREMENTS.
2. REFER TO SPECIFICATIONS OR CONTRACT DRAWING DETAILS FOR ANCHOR BOLTS EMBEDMENT DEPTH REQUIREMENTS. ANCHOR BOLT DIAMETERS SHALL BE AS SHOWN OR AS REQUIRED BY EQUIPMENT MANUFACTURER.

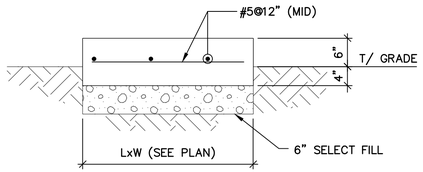

EXTERIOR DOOR LANDING DETAIL

SCALE: NO SCALE

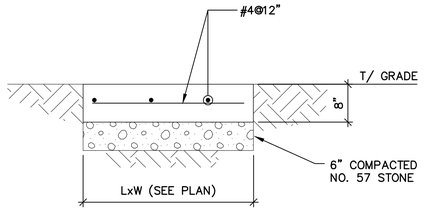

EXTERIOR STAIR/DOOR LANDING DETAIL

SCALE: NO SCALE

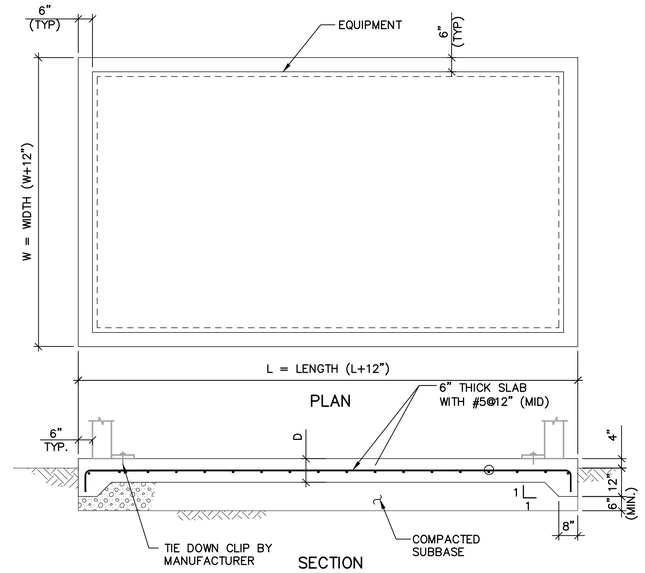

EQUIPMENT SUPPORT PAD DETAIL

SCALE: NOT TO SCALE

NOTES:
1. DIMENSIONS SHALL BE CONFIRMED WITH EQUIPMENT FURNISHED.
2. ALLOWABLE BEARING PRESSURE = 1,500 PSF

User: TTHOMAS Spec: AUS-NCSMOD File I: \ACAD\PROJ\GABPA134 – CSO GROUP 1\BID PACKAGE 2\SHEETS\STRUCTURAL\S-014.DWG Scale: 1:1 SavedDate: 8/8/2018 Time: 14:49 Plot Date: Thomas, Travis; 7/31/2019; 10:01 : Layout: 64

COPYRIGHT: ARCADIS U.S., INC. 2016

IF THIS BAR IS NOT 1" INDICATED SCALE IS INCORRECT

NO.	DATE	ISSUED FOR	BY
0	JUL 2019	BIDDING	HG

SEALS

GEORGIA REGISTERED No. PE041058 PROFESSIONAL 7/31/19 ENGINEER HOUSAM HOBI

ARCADIS BPA A Joint Venture
2839 Paces Ferry Road
Suite 900
Atlanta, GA 30339
Tel: 770–431–8666
Fax: 770–435–2666
www.arcadis–us.com

ATLANTA, GEORGIA
CITY OF ATLANTA
DEPARTMENT OF WATERSHED MANAGEMENT

EAST AREA WATER QUALITY CONTROL FACILITY IMPROVEMENTS

W.01.02.0085

SHEET TITLE

STRUCTURAL TYPICAL DETAILS 3

DATE: JULY 2019
PROJECT NO.: GABPA134
DESIGNED BY: J. STEWART
DRAWN BY: V. VIEIRA
CHECKED BY: J. STEWART

SCALE: AS NOTED

S–014

SHEET 64 OF 150

DOOR SCHEDULE

BUILDING NAME (PREFIX)	DOOR NUMBER	DOOR WIDTH	DOOR HEIGHT	ROUGH OPENING / FRAME SIZE WIDTH	ROUGH OPENING / FRAME SIZE HEIGHT	DETAILS HEAD	DETAILS JAMB	DETAILS SILL	DOOR MATERIAL	DOOR ELEV	UL RATED	HARDWARE SET	ACCESS AND CONTROL	REMARKS
SLUDGE DEWATERING (SD) BUILDING	101	3'–0"	7'–0"	3'–4"	7'–2"	A	A	A	1	A	–	1	–	
	102	16'–0"	12'–0"	16'–0"	12'–0"	B	B	B	2	C	–	–	–	
	103	2@3'–0"	7'–2"	6'–4"	7'–4"	D	D	D	1	B	–	2	–	
	104	3'–0"	7'–0"	3'–4"	7'–2"	A	A	A	1	A	–	1	–	
	105	12'–0"	10'–0"	12'–0"	10'–0"	B	B	B	2	C	–	–	–	
	106	3'–0"	7'–2"	3'–4"	7'–4"	C	C	C	1	A	B	4	–	

BUILDING CODE ANALYSIS:

SLUDGE DEWATERING BUILDING:

1. BUILDING OCCUPANCY: F1 (ELECTRICAL ROOM: F2)
   CONSTRUCTION TYPE: IIB
   FIRE RATING: 0 HRS
2. FIRE RATING AT ELECTRICAL ROOM: 2 HRS. ELECTRICAL ROOM DOORS SHALL BE RATED FOR A 2–HOUR ASSEMBLY. ANY DUCT PENETRATIONS WILL NEED A FIRE DAMPER. ALL OTHER PENETRATIONS SHALL BE FIRE RATED FOR 2 HOURS.

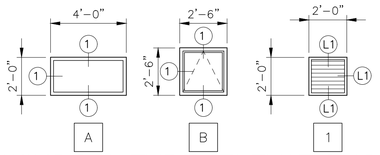

WINDOW TYPE ELEVATIONS

SCALE: 1/4" = 1'–0"

WINDOW NOTES:

1. REFER TO DRAWING ON THIS SHEET FOR WINDOW AND LOUVER DETAILS.
2. ALL GLAZING SHALL BE 1" INSULATED LOW–E GLASS.

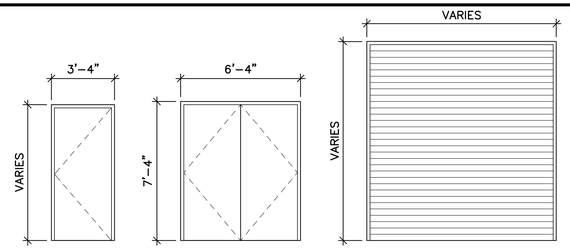

DOOR TYPE ELEVATIONS

SCALE: 1/4" = 1'–0"

DOOR NOTES:

1. FIELD VERIFY ALL EXISTING DIMENSIONS AND CONDITIONS.
2. FOR DOOR HARDWARE TYPES SEE SPECIFICATIONS.
3. FOR DOOR HAND, REFERENCE STRUCTURAL AND MECHANICAL PLAN DRAWINGS.
4. OVERHEAD COILING DOOR IS ELECTRICALLY OPERATED FROM INTERIOR ONLY.
6. DOORS ARE DOUBLE EGRESS AS SHOWN ON PLANS.
7. UNDERCUT DOOR BY 1" OR AS REQUIRED BY HVAC.

DOOR MATERIALS:

1 – HOLLOW METAL DOOR AND FRAME

2 – ALUMINUM OVERHEAD COILING DOOR

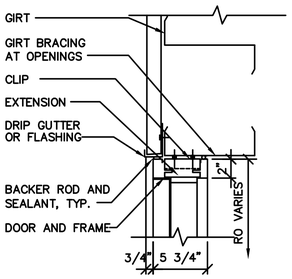

HEAD A

SCALE: 1 1/2"=1'–0"

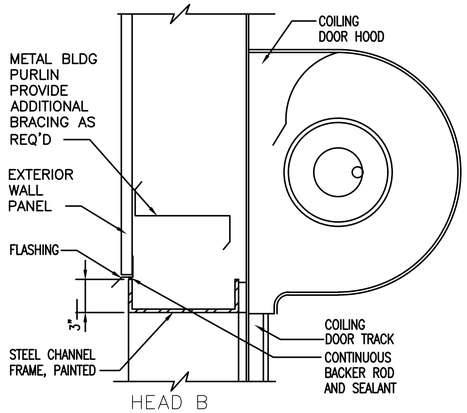

HEAD B

SCALE: 1 1/2"=1'–0"

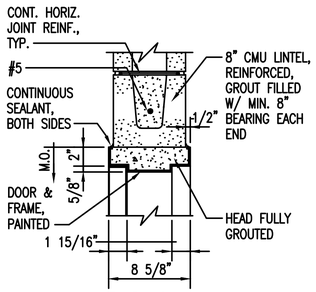

HEAD C

SCALE: 1 1/2"=1'–0"

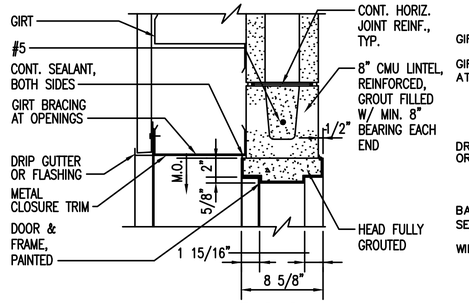

HEAD D

SCALE: 1 1/2"=1'–0"

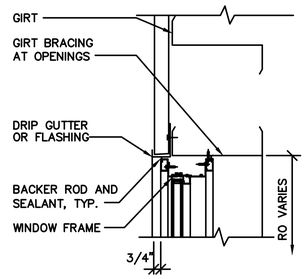

WINDOW HEAD 1

SCALE: 1 1/2"=1'–0"

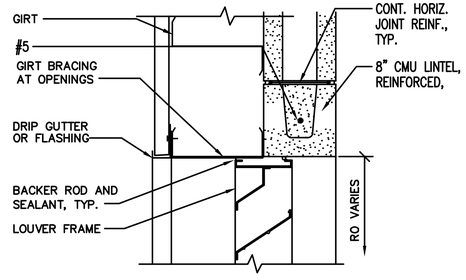

LOUVER HEAD L1

SCALE: 1 1/2"=1'–0"

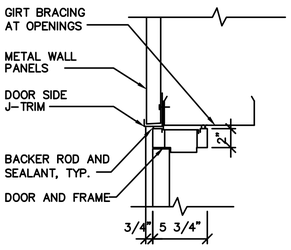

JAMB A

SCALE: 1 1/2"=1'–0"

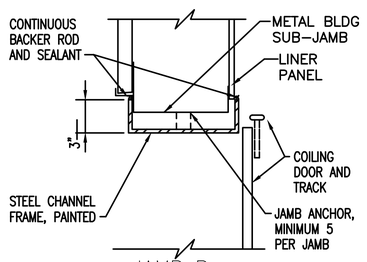

JAMB B

SCALE: 1 1/2"=1'–0"

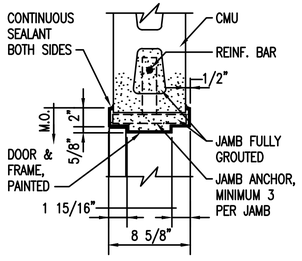

JAMB C

SCALE: 1 1/2"=1'–0"

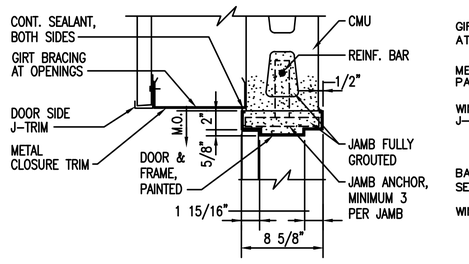

JAMB D

SCALE: 1 1/2"=1'–0"

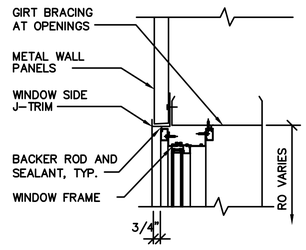

WINDOW JAMB 1

SCALE: 1 1/2"=1'–0"

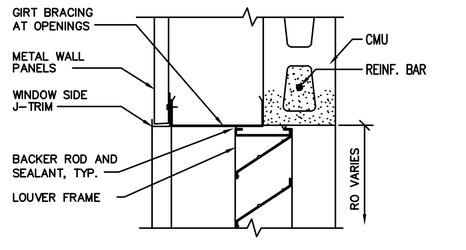

LOUVER JAMB L1

SCALE: 1 1/2"=1'–0"

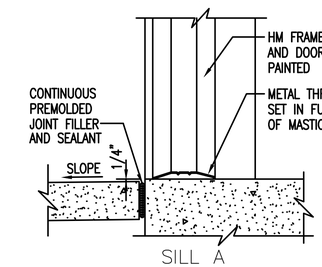

SILL A

SCALE: 1 1/2"=1'–0"

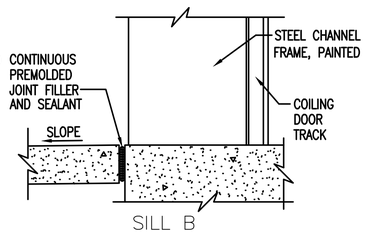

SILL B

SCALE: 1 1/2"=1'–0"

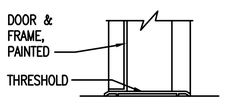

SILL C

SCALE: 1 1/2"=1'–0"

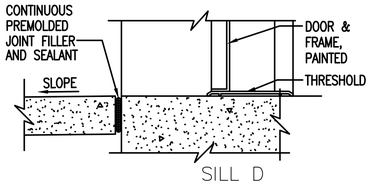

SILL D

SCALE: 1 1/2"=1'–0"

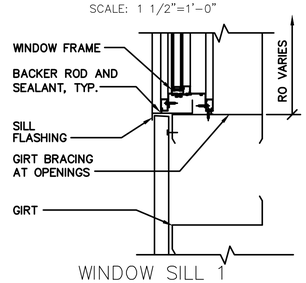

WINDOW SILL 1

SCALE: 1 1/2"=1'–0"

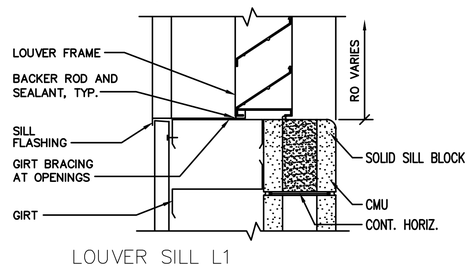

LOUVER SILL L1

SCALE: 1 1/2"=1'–0"

COPYRIGHT: ARCADIS U.S., INC. 2016

IF THIS BAR IS NOT 1" INDICATED SCALE IS INCORRECT

NO.	DATE	ISSUED FOR	BY
0	JUL 2019	BIDDING	HG

SEALS

GEORGIA REGISTERED No. PE041058 PROFESSIONAL 7/31/19 ENGINEER HOUSAM HOBI

ARCADIS BPA A Joint Venture
2839 Paces Ferry Road
Suite 900
Atlanta, GA 30339
Tel: 770–431–8666
Fax: 770–435–2666
www.arcadis–us.com

ATLANTA, GEORGIA
CITY OF ATLANTA
DEPARTMENT OF WATERSHED MANAGEMENT

EAST AREA WATER QUALITY CONTROL FACILITY IMPROVEMENTS

W.01.02.0085

SHEET TITLE

DOOR AND WINDOW SCHEDULES AND DETAILS

DATE:	JULY 2019
PROJECT NO.:	GABPA134
DESIGNED BY:	J. STEWART
DRAWN BY:	R. BELLO
CHECKED BY:	J. STEWART

SCALE: AS NOTED

S–015

SHEET 65 OF 150

User: TTHOMAS Spec: AUS–NCSMOD File: I:\ACAD\PROJ\GABPA134 – CSO GROUP 1\BID PACKAGE 2\SHEETS\STRUCTURAL\S–015.DWG Scale: 1:1 SavedDate: 7/25/2019 Plot Date: 7/25/2019 Time: 18:48 Plot Date: Thomas, Travis; 7/31/2019; 10:02 ; Layout: 65

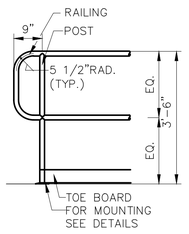

TYPICAL RAILING END

SCALE: 1/2" = 1'-0"

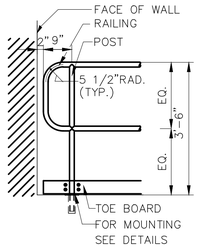

TYPICAL RAILING END

SCALE: 1/2" = 1'-0"

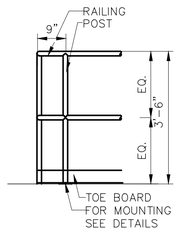

TYPICAL RAILING CORNER

SCALE: 1/2" = 1'-0"

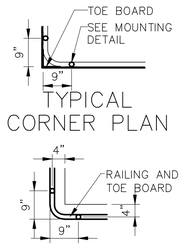

TYPICAL CORNER PLAN

TYPICAL CORNER PLAN

SCALE: 1/2" = 1'-0"

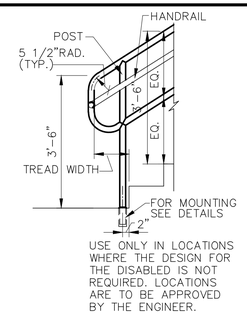

USE ONLY IN LOCATIONS WHERE THE DESIGN FOR THE DISABLED IS NOT REQUIRED. LOCATIONS ARE TO BE APPROVED BY THE ENGINEER.

RAILING TYPE 1 STAIR END DETAIL

SCALE: 1/2" = 1'-0"

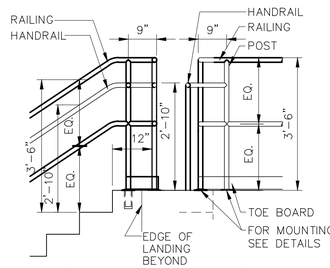

TYPICAL RAILING TO RAILING STAIR CORNER

(RAILING CONTINUOUS AROUND CORNER)
(LANDING EDGE AND NOSING EDGE DO NOT ALIGN)

SCALE: 1/2" = 1'-0"

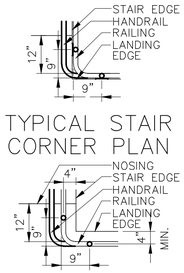

TYPICAL STAIR CORNER PLAN

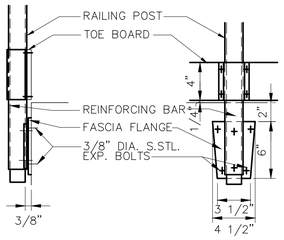

SIDE MOUNT DETAIL

SCALE: 1 1/2" = 1'-0"

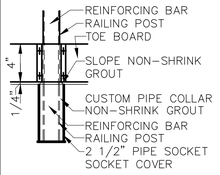

FIXED RAIL DETAIL

SCALE: 1 1/2" = 1'-0"

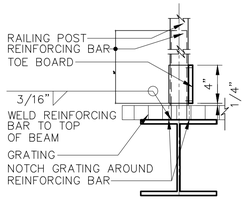

SECTION GRATING AND BEAM MOUNT DETAIL

SCALE: 1 1/2" = 1'-0"

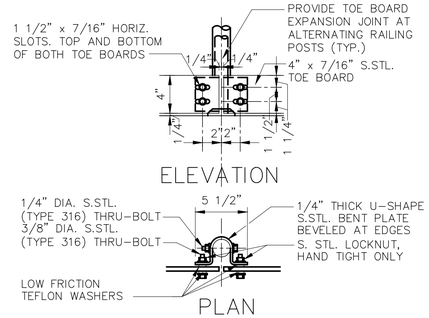

PLAN

TOE BOARD EXPANSION JOINT DETAIL

SCALE: 1 1/2" = 1'-0"

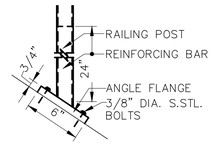

STRINGER MOUNT DETAIL

SCALE: 1 1/2" = 1'-0"

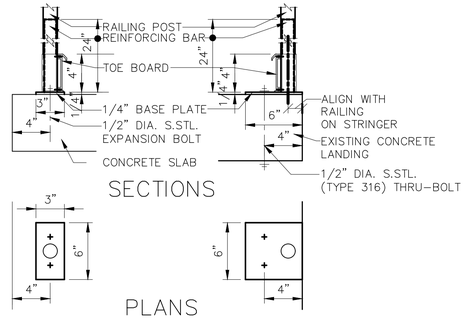

SURFACE (TOP) MOUNT DETAILS

SCALE: 1 1/2" = 1'-0"

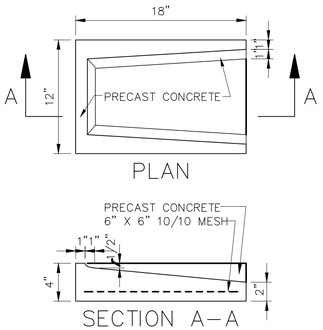

SECTION A-A

TYPICAL SPLASH BLOCK DETAIL

PROVIDE ONE AT EACH ROOF DRAIN LEADER OUTLET

SCALE: 1 1/2" = 1'-0"

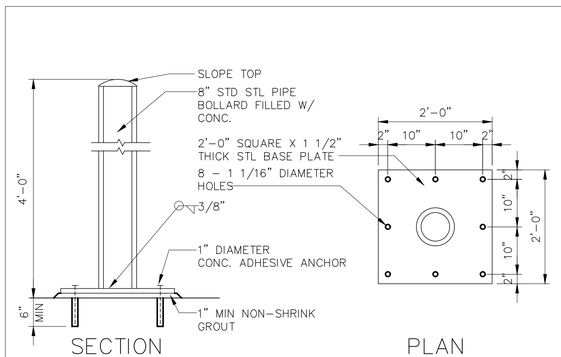

TYPICAL BOLLARD DETAIL

SCALE: 3/4"=1'-0"

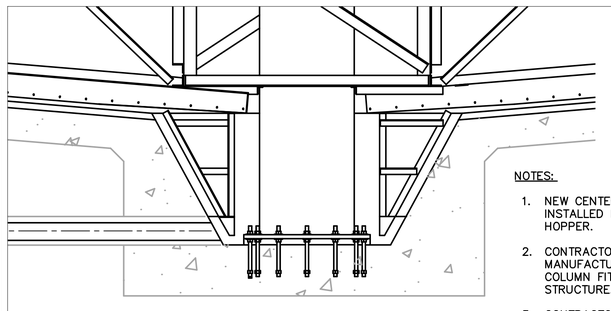

NOTES:

1. NEW CENTER COLUMN TO BE INSTALLED IN THE EXISTING SLUDGE HOPPER.
2. CONTRACTOR TO COORDINATE WITH MANUFACTURER THAT THE NEW COLUMN FITS IN THE EXISTING STRUCTURE.
3. CONTRACTOR TO SUBMIT ADHESIVE ANCHOR LAYOUT AND CALCULATIONS FOR ENGINEER'S AND CITY'S APPROVAL PRIOR TO FABRICATION.

ANCHORING OF THICKENING MECHANISM

SCALE: 1/2"=1'-0"

COPYRIGHT:
ARCADIS U.S., INC.
2016

IF THIS BAR IS NOT 1" INDICATED SCALE IS INCORRECT

NO.	DATE	ISSUED FOR	BY
0	JUL 2019	BIDDING	HG

SEALS

GEORGIA REGISTERED No. PE041058 PROFESSIONAL 7/31/19 ENGINEER HOUSAM HOBI

ARCADIS
BPA
A Joint Venture
2839 Paces Ferry Road
Suite 900
Atlanta, GA 30339
Tel: 770-431-8666
Fax: 770-435-2666
www.arcadis-us.com

ATLANTA, GEORGIA
CITY OF ATLANTA
DEPARTMENT OF WATERSHED MANAGEMENT

EAST AREA WATER QUALITY CONTROL FACILITY IMPROVEMENTS

W.01.02.0085

SHEET TITLE

MISCELLANEOUS TYPICAL DETAILS

DATE:	JULY 2019
PROJECT NO.:	GABPA134
DESIGNED BY:	J. STEWART
DRAWN BY:	R. BELLO
CHECKED BY:	J. STEWART

SCALE: AS NOTED

S-016

SHEET 66 OF 150

User:TTHOMAS Spec: AUS-NCSMOD File: I:\ACAD\PROJ\GABPA134 - CSO GROUP 1\BID PACKAGE 2\SHEETS\STRUCTURAL\S-016.DWG Scale:1:1 SavedDate:8/8/2018 Time:17:31 Plot Date: Thomas, Travis; 7/31/2019; 10:04 ; Layout:66

GENERAL NOTES:

1. CONTRACTOR TO PRESSURE WASH AND CLEAN ALL EXTERIOR & INTERIOR SURFACES, INCLUDING STAIRS, PRIOR TO PROCEEDING WITH THE WORK. FOR INTERIOR SURFACES CONTRACTOR SHALL REMOVE ALL EXISTING COATING PRIOR TO PERFORMING REPAIR/COATING WORK.
2. REFER TO "M" SHEETS FOR CENTER MECHANISM AND ASSOCIATED APPURTENANCES REPLACEMENT.
3. REFER TO SHEET S-020 FOR REPAIR DETAILS AND QUANTITIES.
4. ENTRANCE INTO TANK IS CONSIDERED A CONFINED SPACE ENTRY (NON-PERMIT). CONTRACTOR SHALL ADMINISTER, MONITOR, AND PROVIDE ALL NECESSARY REQUIREMENTS FOR ENTRANCE INTO THE TANK PER LAWS AND REGULATIONS.
5. ALL PHOTO IDENTIFICATION SHOWN ARE APPROXIMATE LOCATIONS. CONTRACTOR SHALL VERIFY.
6. EXISTING ALUMINUM RAILING TO BE REMOVED AND REPLACED WITH NEW ALUMINUM RAILING. SEE SHEET S-016 FOR DETAIL.
7. CONTRACTOR TO REMOVE EXISTING GROUT TOPPING AT BASE SLAB. ROUGHEN CONCRETE FOUNDATION FOR ¼" AMPLITUDE AND PROVIDE NEW 2" GROUT TOPPING (SLOPE TO MATCH EXISTING SLOPE AND THICKENER MECHANISM REQUIREMENTS).

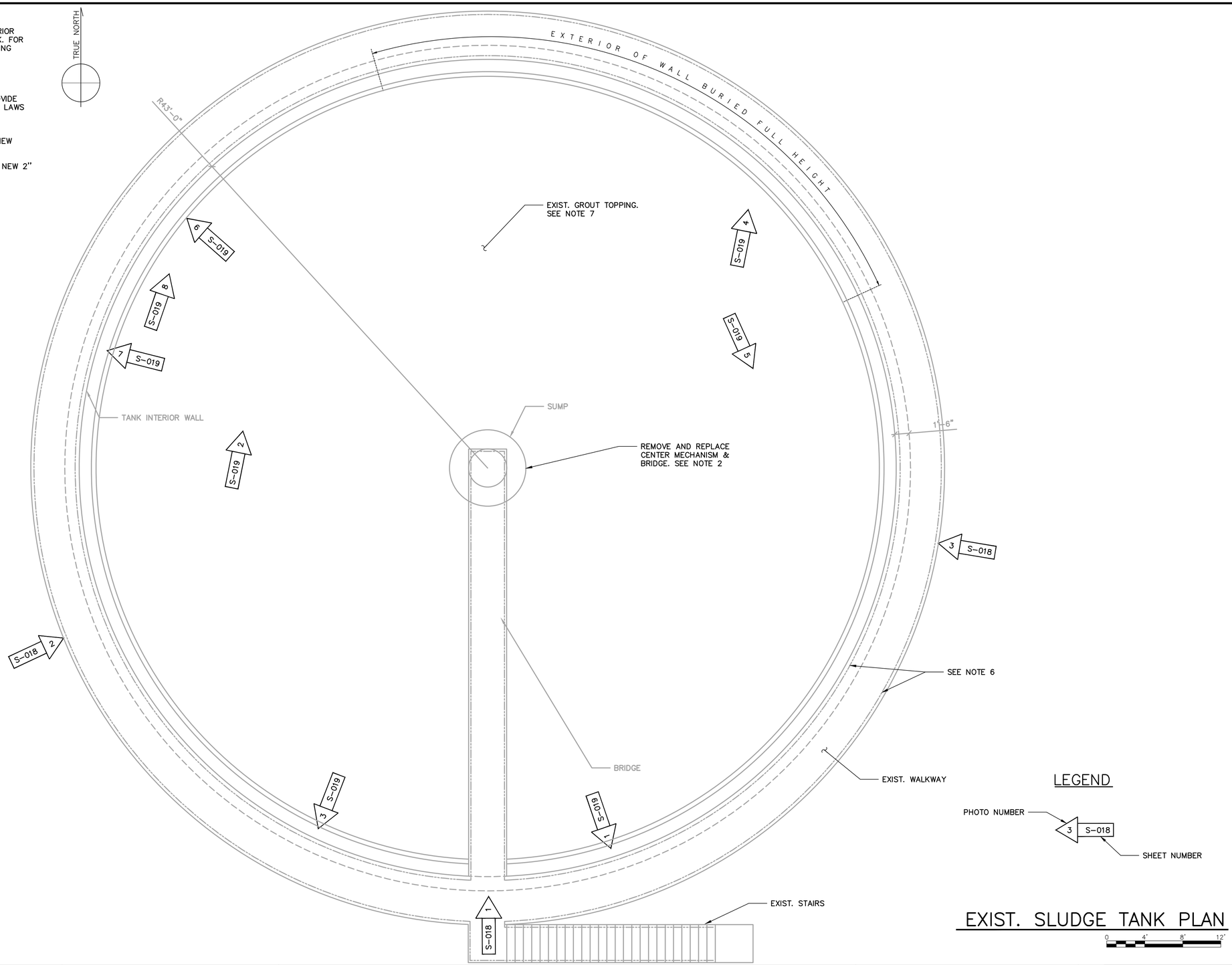

COPYRIGHT:
ARCADIS U.S., INC.
2016

IF THIS BAR IS NOT 1" INDICATED SCALE IS INCORRECT

NO.	DATE	ISSUED FOR	BY
0	JUL 2019	BIDDING	HG

SEALS

GEORGIA REGISTERED No. PE041058 PROFESSIONAL 7/31/19 ENGINEER HOUSAM HOBI

ARCADIS
BPA
A Joint Venture
2839 Paces Ferry Road
Suite 900
Atlanta, GA 30339
Tel: 770-431-8666
Fax: 770-435-2666
www.arcadis-us.com

ATLANTA, GEORGIA
CITY OF ATLANTA
DEPARTMENT OF WATERSHED MANAGEMENT

EAST AREA WATER QUALITY CONTROL FACILITY IMPROVEMENTS

W.01.02.0085

SHEET TITLE

SLUDGE HOLDING TANK PLAN AND NOTES

DATE: JULY 2019
PROJECT NO.: GABPA134
DESIGNED BY: J. STEWART
DRAWN BY: V. VIEIRA
CHECKED BY: J. STEWART

SCALE: 3/16" = 1'-0"

S-017

SHEET 67 OF 150

User:TTHOMAS Spec:AUS-NCSMOD File:I:\ACAD\PROJ\GABPA134 - CSO GROUP 1\BID PACKAGE 2\SHEETS\STRUCTURAL\S-017.DWG Scale:1:1 SavedDate:5/10/2019 Time:15:38 Plot Date: Thomas, Travis; 7/31/2019; 10:12 ; Layout:67

PHOTO 1:
EXTERIOR ELEVATION

PHOTO 2:
EXTERIOR ELEVATION

PHOTO 3:
EXTERIOR ELEVATION

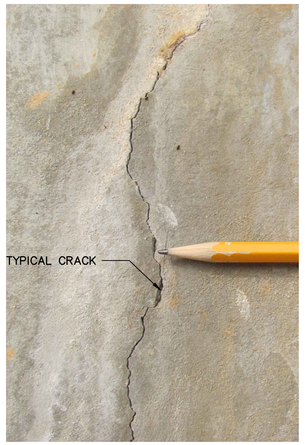

PHOTO 4:
TYPICAL CRACK PHOTO

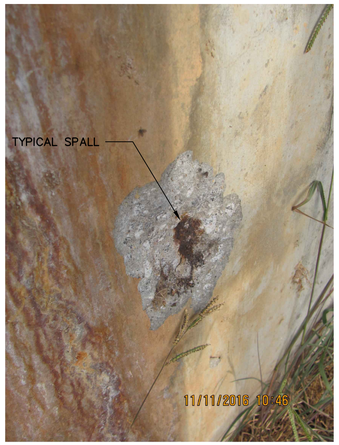

PHOTO 5: TYPICAL
SPALL WITH CORROSION

PHOTO 6:
TYPICAL SPALL PHOTO

GENERAL NOTES:
1. PROVIDE HIGH PRESSURE WASH TO EXTERIOR WALL SURFACE TO REMOVE AND FREE THE SURFACE OF ALL VISIBLE RUST, MILL SCALE, AND FOREIGN MATTER.
2. CONTRACTOR SHALL PROVIDE MEASURES TO MANAGE AND CONTAIN ALL WATER FROM HIGH PRESSURE WASH.
3. EXISTING ALUMINUM RAILING TO BE REMOVED AND REPLACED WITH NEW ALUMINUM RAILING. SEE SHEET S-016 FOR DETAIL.

COPYRIGHT:
ARCADIS U.S., INC.
2016

IF THIS BAR IS NOT 1" INDICATED SCALE IS INCORRECT

NO.	DATE	ISSUED FOR	BY
0	JUL 2019	BIDDING	HG

SEALS

GEORGIA REGISTERED No. PE041058 PROFESSIONAL ENGINEER 7/31/19 HOUSAM HOBI

ARCADIS
BPA
A Joint Venture
2839 Paces Ferry Road
Suite 900
Atlanta, GA 30339
Tel: 770-431-8666
Fax: 770-435-2666
www.arcadis-us.com

ATLANTA, GEORGIA
CITY OF ATLANTA
DEPARTMENT OF WATERSHED MANAGEMENT

EAST AREA WATER QUALITY CONTROL
FACILITY IMPROVEMENTS

W.01.02.0085

SHEET TITLE

SLUDGE HOLDING TANK
EXTERIOR CONDITION PHOTOS

DATE: JULY 2019
PROJECT NO.: GABPA134
DESIGNED BY: J. STEWART
DRAWN BY: V. VIEIRA
CHECKED BY: J. STEWART

SCALE: NONE

S-018

SHEET 68 OF 150

User: TTHOMAS Spec: AUS-NCSM0D File: I:\ACAD\PROJ\GABPA134 - CSO GROUP 1\BID PACKAGE 2\SHEETS\STRUCTURAL\S-018.DWG Scale: 1:1 SavedDate: 8/8/2018 Time: 15:04 Plot Date: Thomas, Travis; 7/31/2019; 10:14 : Layout: 68

PHOTO 1: TYPICAL INTERIOR WALL CRACK

PHOTO 2: TYPICAL CRACK AT JOINTS

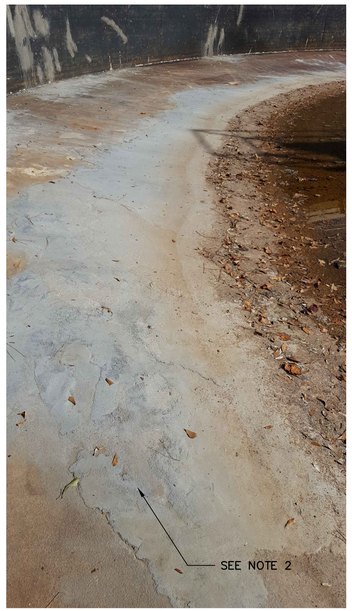

PHOTO 3: TYPICAL FLOOR SLAB

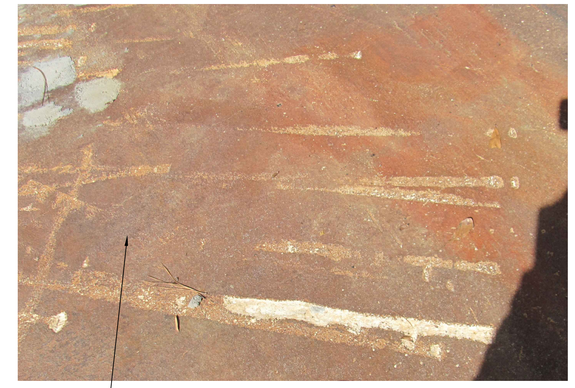

PHOTO 4: TYPICAL FLOOR SLAB

PHOTO 5: TYPICAL COATING FAILURE

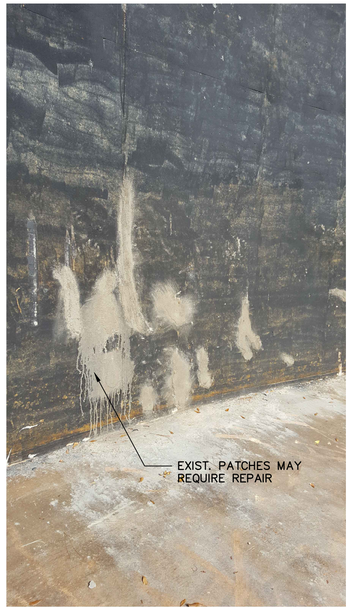

PHOTO 6: TYPICAL WALL ELEVATION

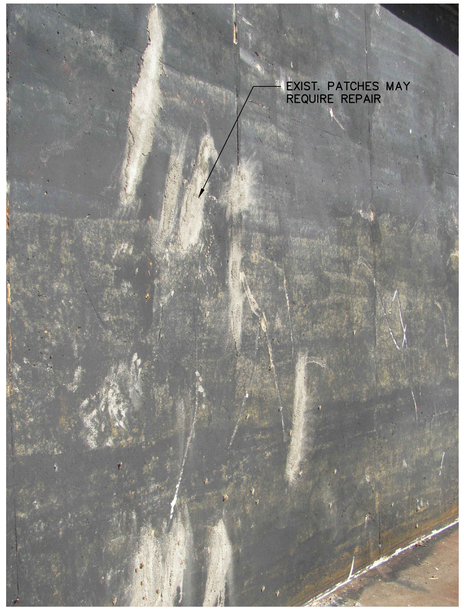

PHOTO 7: TYPICAL WALL ELEVATION

PHOTO 8: TYPICAL WALL ELEVATION

NOTES:
1. REMOVE EXISTING COATING IN ITS ENTIRETY AND PREPARE SURFACE AS SPECIFIED AND AS RECOMMENDED BY THE COATING MANUFACTURER.
2. CONTRACTOR TO REMOVE EXISTING GROUT TOPPING AT BASE SLAB. ROUGHEN CONCRETE FOUNDATION FOR ¼" AMPLITUDE AND PROVIDE NEW 2" GROUT TOPPING (SLOPE TO MATCH EXISTING SLOPE AND THICKENER MECHANISM REQUIREMENTS).

COPYRIGHT:
ARCADIS U.S., INC.
2016

IF THIS BAR IS NOT 1" INDICATED SCALE IS INCORRECT

NO.	DATE	ISSUED FOR	BY
0	JUL 2019	BIDDING	HG

SEALS

GEORGIA REGISTERED No. PE041058 PROFESSIONAL 7/31/19 ENGINEER HOUSAM HOBI

ARCADIS
BPA
A Joint Venture
2839 Paces Ferry Road
Suite 900
Atlanta, GA 30339
Tel: 770-431-8666
Fax: 770-435-2666
www.arcadis-us.com

ATLANTA, GEORGIA
CITY OF ATLANTA
DEPARTMENT OF WATERSHED MANAGEMENT

EAST AREA WATER QUALITY CONTROL FACILITY IMPROVEMENTS

W.01.02.0085

SHEET TITLE

SLUDGE HOLDING TANK INTERIOR CONDITION PHOTOS

DATE:	JULY 2019
PROJECT NO.:	GABPA134
DESIGNED BY:	J. STEWART
DRAWN BY:	V. VIEIRA
CHECKED BY:	J. STEWART

SCALE: NONE

S-019

SHEET 69 OF 150

User:TTHOMAS Spec:AUS-NCSMOD File:I:\ACAD\PROJ\GABPA134 - CSO GROUP 1\BID PACKAGE 2\SHEETS\STRUCTURAL\S-019.DWG Scale:1:1 SavedDate:8/8/2018 Time:15:10 Plot Date: Thomas, Travis; 7/31/2019; 10:16 ; Layout:69

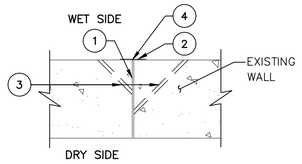

TYPICAL CRACK REPAIR DETAIL

1 / –

SCALE: NO SCALE

1. LEAKING CRACK
2. APPLY GEL EPOXY SEALER PRIOR TO INJECTING CRACK INJECTION MATERIAL, REMOVE GEL EPOXY SEALER AFTER SEALING WORK IS COMPLETE
3. INJECTION PORTS FOR HYDROPHILIC CRACK INJECTION MATERIAL.
4. INJECTION PORT FOR EPOXY CRACK INJECTION MATERIAL SHALL BE DIRECTLY INTO CRACK.

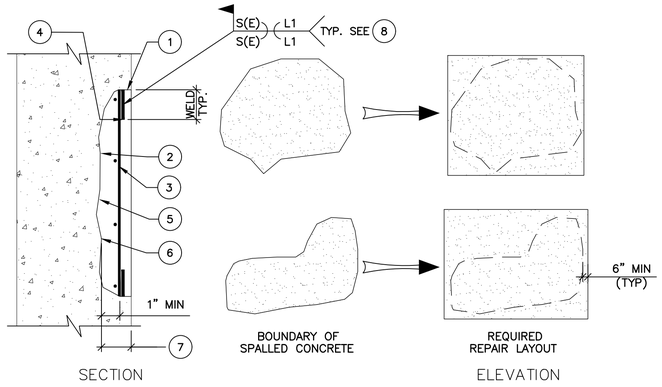

TYPICAL CONCRETE SURFACE SPALL REPAIR DETAIL

2 / –

SCALE: NO SCALE

1. DO NOT CUT REINFORCING UNLESS NECESSARY TO REMOVE ALL DETERIORATED CONCRETE.
2. REMOVE ALL DETERIORATED CONCRETE TO SOUND CONCRETE. CHIP CONCRETE SUBSTRATE TO OBTAIN A SURFACE PROFILE OF 1/8–INCH IN DEPTH WITH A NEW FRACTURED AGGREGATE SURFACE.
3. WHERE REINFORCING STEEL WITH ACTIVE CORROSION IS ENCOUNTERED, ENGINEER WILL REVIEW CONDITION OF CORRODED REBARS PRIOR TO REPAIR. REPLACEMENT IS REQUIRED WHERE LOSS ON REBAR CROSS SECTION IS OVER 25%. AFTER REPAIR WHERE REINFORCING REMAINS, CLEAN REINFORCING STEEL TO REMOVE ALL CONTAMINANTS AND RUST. REMOVE CONCRETE TO A DEPTH OF 1–INCH MINIMUM BEHIND REINFORCING BAR AS SHOWN.
4. IF REINFORCING REPLACEMENT IS REQUIRED, CUT EXISTING CORRODED REINFORCING BAR AS REQUIRED AND WELD NEW REBAR OF SAME SIZE, AS SHOWN.
5. SURFACE PREPARATION SHALL COMPLY WITH REPAIR MORTAR MANUFACTURER'S INSTRUCTIONS.
6. INSTALL REPAIR MORTAR PER THE MANUFACTURER'S REQUIREMENTS.
7. FOR BID PURPOSES, ASSUME TOTAL DEPTH OF REPAIR IS 6 INCHES.
8. S, (E), AND L1 DEFINITIONS CORRESPOND TO ANSI/AWS D1.4. MINIMUM L1 FOR BIDDING PURPOSES IS 3 INCHES (MECHANICAL COUPLER AS AN ALTERNATE TO WELD).

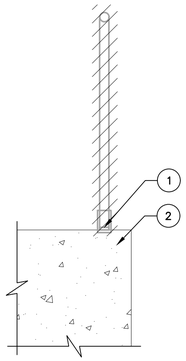

TYPICAL EXISTING RAILING POST REMOVAL DETAIL

3 / –

SCALE: NO SCALE

1. REMOVE ALL RAILING, INCLUDING 2 1/2" DIA. PIPE SLEEVE AND PORTION OF POST EMBEDDED IN EXISTING SLAB.
2. FILL VOID AREA WITH NON–SHRINK GROUT.
3. INSTALL NEW ALUMINUM RAILING. REFER TO TYPICAL RAILING DETAILS ON SHEET S–016.

REPAIR AND COATING SCHEDULE

	REPAIR TYPE	DETAIL REFERENCE NUMBER	BID QUANTITY		NOTES
SLUDGE HOLDING TANK	CRACK REPAIR (INTERIOR & EXTERIOR)	DETAIL 1	1200	LF	SEE NOTE 4
	SURFACE SPALL	DETAIL 2	150	SF	SEE NOTE 3
	INTERIOR COATING		16000	SF	REFER TO SPEC 09965 FOR COATING

REPAIR SCHEDULE NOTES:

1. PAYMENT OF CONCRETE REPAIR AND REHABILITATION WORK SHALL BE BASED ON ACTUAL MEASURED REPAIR QUANTITIES MULTIPLIED BY THE ASSOCIATED UNIT PRICES INCLUDED ON THE PROPOSAL BID FORM.
2. ENGINEER MAY DIRECT CONTRACTOR TO PERFORM REPAIR WORK THAT IS GREATER THAN OR LESS THAN THE ESTIMATED QUANTITIES STATED ON THE PROPOSAL BID FORM. CONTRACTOR WILL BE COMPENSATED AT THE UNIT PRICES ON THE PROPOSAL BID FORM FOR THE ACTUAL QUANTITY OF CONCRETE REPAIR WORK AS SHOWN, SPECIFIED OR ORDERED.
3. CONTRACTOR SHALL EXAMINE ALL EXTERIOR AND INTERIOR SURFACES OF THE SLUDGE HOLDING TANK AND STAIRS, AND IDENTIFY AREAS OF REPAIR. ONCE IDENTIFIED, ENGINEER WILL REVIEW WITH CONTRACTOR TO CONFIRM REPAIR, REPAIR LIMITS, AND REPAIR METHOD.
4. CONTRACTOR SHALL EXAMINE ALL INTERIOR WALLS OF THE TANK AND IDENTIFY CRACKS GREATER THAN 0.010–INCH WIDE. ONCE IDENTIFIED, ENGINEER WILL REVIEW AND VERIFY CRACKS TO BE INJECTED.

User: TTHOMAS Spec: AUS–NCSM00 File: I:\ACAD\PROJ\GABPA134 – CSO GROUP 1\BID PACKAGE 2\SHEETS\STRUCTURAL\S–020.DWG Scale: 1:1 SavedDate: 8/8/2018 Time: 15:13 Plot Date: Thomas, Travis; 7/31/2019; 10:18 : Layout: 70

COPYRIGHT: ARCADIS U.S., INC. 2016

IF THIS BAR IS NOT 1" INDICATED SCALE IS INCORRECT

NO.	DATE	ISSUED FOR	BY
0	JUL 2019	BIDDING	HG

SEALS

GEORGIA REGISTERED No. PE041858 PROFESSIONAL 7/31/19 ENGINEER HOUSAM HOBI

ARCADIS BPA A Joint Venture
2839 Paces Ferry Road
Suite 900
Atlanta, GA 30339
Tel: 770–431–8666
Fax: 770–435–2666
www.arcadis–us.com

ATLANTA, GEORGIA
CITY OF ATLANTA
DEPARTMENT OF WATERSHED MANAGEMENT

EAST AREA WATER QUALITY CONTROL FACILITY IMPROVEMENTS

W.01.02.0085

SHEET TITLE

SLUDGE HOLDING TANK REPAIR DETAILS AND QUANTITIES

DATE: JULY 2019
PROJECT NO.: GABPA134
DESIGNED BY: V. VIEIRA
DRAWN BY: V. VIEIRA
CHECKED BY: A. SHAH

SCALE: NONE

S–020

SHEET 70 OF 150

LEGEND

- AIR COMPRESSOR
- FLOW METER
- BACKFLOW PREVENTER
- FLEXIBLE PIPE
- MUFFLER
- UNDERCUT DOOR (UC (WIDTH) (CFM))
- ANGLE GATE VALVE (MANUAL)
- SUPPLY AIR
- RETURN OR EXHAUST AIR
- THERMOSTAT (T)
- CONTROL SWITCH (S, S)
- DOOR LOUVER NO. INDICATES SIZE IN SQ.FT. (2)
- PRESSURE REDUCING VALVE, PILOT OPERATED
- GATE VALVE
- CHECK VALVE
- MIXER VALVE
- AUTOMATIC CONTROL VALVE 2-WAY
- AUTOMATIC CONTROL VALVE 3-WAY
- PRESSURE REDUCING VALVE, SELF CONTAINED
- SOLENOID OPERATED VALVE (S)
- GLOBE VALVE (MANUAL) N.C.
- BALL VALVE (MANUAL)
- MOTORIZED BALL VALVE (M)
- DRAIN
- STRAINER WITH BLOW OFF VALVE AND PLUG
- UNION CONNECTION
- FLANGE CONNECTION
- PRESSURE RELIEF VALVE
- COMBINATION BALANCING COCK & FLOW SENSOR
- TRIPLE DUTY VALVE (STRAIGHT, ANGLE PATTERN)
- BUTTERFLY VALVE
- HOSE CONNECTOR
- AIR VENT
- EXPANSION JOINT OR COMPENSATOR
- PIPE ANCHOR
- PIPE GUIDE
- CONCENTRIC REDUCER
- ECCENTRIC REDUCER-FLUSH TOP
- ECCENTRIC REDUCER-FLUSH BOTTOM
- PIPE ELBOW, 90 TURNED DOWN
- PIPE ELBOW, 90 TURNED UP
- PIPE TEE, 90 TURNED DOWN
- PIPING TEE, OUTLET TURNED UP
- PRESSURE GAGE WITH SHUTOFF COCK (BALL VALVE) (P)
- PRESSURE SWITCH (PS)
- THERMOMETER (M)
- FAN
- EXHAUST FAN

- SUPPLY AIR DUCT SECTION-UP
- SUPPLY AIR DUCT SECTION-DOWN
- RETURN AIR DUCT SECTION-UP
- RETURN AIR DUCT SECTION-DOWN
- MOTORIZED DAMPER (M)
- SMOKE DAMPER WITH ACCESS DOOR (M, SD)
- FIRE DAMPER WITH ACCESS DOOR (FD)
- MANUAL VOLUME DAMPER (VD)
- BACKDRAFT DAMPER (BD)
- CHANGE OF ELEVATION: RISE (R) OR DROP (D) (SLOPE)
- ACCESS DOOR OR ACCESS PANEL (OR)
- MITERED ELBOW WITH TURNING VANES
- FLEXIBLE CONNECTOR
- SPLITTER DAMPER-SEE PLAN FOR NECK SIZES (NK=X/2)
- AIR EXTRACTOR WITH VANES
- DUCT TRANSITION-RECTANGULAR
- DUCT TRANSITION-RECTANGULAR TO ROUND
- DUCT ELBOW-TURNED UP 90 - RECTANGULAR
- DUCT ELBOW-TURNED DOWN 90 - RECTANGULAR
- CEILING DIFFUSSER-ROUND NECK
- SUPPLY REGISTER OR GRILLE-SIDEWALL
- SUPPLY CEILING REGISTER
- RETURN OR EXHAUST-REGISTER OR GRILLE-SIDEWALL
- RETURN OR EXHAUST-CEILING REGISTER
- RETURN OR EXHAUST-REGISTER OR GRILLE - LOW SIDEWALL (LSW)
- SUPPLY-REGISTER OR GRILLE-LOW SIDEWALL (LSW)
- VANED ELBOW (SHORT RADIUS) ROUND ELBOW (SHORT RADIUS)
- DUCT SIZE - FIRST FIGURE IS SIDE SHOWN (12X8)
- FLEXIBLE DUCTWORK
- SMOKE DETECTOR - DUCT MOUNTED (SD)
- MOTOR ACTUATED DAMPER (M)
- MOTOR ACTUATED DISK DAMPER (M)
- OPPOSED BLADE DAMPER
- PARALLEL BLADE DAMPER
- FLEXIBLE CONNECTOR
- SMOKE DETECTOR (SURFACE MOUNTED) (SD)
- SMOKE DETECTOR (DUCT MOUNTED) (SD)
- VENT (PLUMBING) (V)
- COLD WATER (DOMESTIC) (CW)
- MAKE UP WATER (MU)
- SANITARY (WASTE) (SAN)
- NATURAL GAS (NG)
- NON-POTABLE WATER (NPW)
- HOT WATER (DOMESTIC) (HW)
- CENTRIFUGAL PUMP (M)
- SUBMERSIBLE PUMP (M)
- HIGH PRESSURE STEAM
- MEDIUM PRESSURE STEAM

- LOW PRESSURE STEAM
- HPC - HIGH PRESSURE CONDENSATE
- MPC - MEDIUM PRESSURE CONDENSATE
- LPC - LOW PRESSURE CONDENSATE
- BBD - BOILER BLOW DOWN
- PC - PUMP CONDENSATE
- VPD - VACUUM PUMP DISCHARGE
- MU - MAKE-UP WATER
- ATV - ATMOSPHERIC VENT
- FOD - FUEL OIL DISCHARGE
- FOG - FUEL OIL GAUGE
- FOS - FUEL OIL SUCTION
- FOR - FUEL OIL RETURN
- FOV - FUEL OIL TANK VENT
- HWS - LOW TEMPERATURE HOT WATER SUPPLY
- MTWS - MEDIUM TEMPERATURE HOT WATER SUPPLY
- HTWS - HIGH TEMPERATURE HOT WATER SUPPLY
- HWR - LOW TEMPERATURE HOT WATER RETURN
- MTWR - MEDIUM TEMPERATURE HOT WATER RETURN
- HTWR - HIGH TEMPERATURE HOT WATER RETURN
- A - COMPRESSED AIR
- VAC - VACUUM AIR
- IA - INSTRUMENT AIR
- G - GAS
- FOV - FUEL OIL TANK VENT
- RD - REFRIGERANT DISCHARGE
- RS - REFRIGERANT SUCTION
- B - BRINE SUPPLY
- BR - BRINE RETURN
- CW - CONDENSER WATER SUPPLY
- CR - CONDENSER WATER RETURN
- CWS - CHILLED WATER SUPPLY
- CWR - CHILLED WATER RETURN
- FILL - FILL LINE
- H - HUMIDIFICATION LINE
- DRAIN
- HCS - HOT/CHILLED WATER SUPPLY
- HCR - HOT/CHILLED WATER RETURN
- RL - REFRIGERANT LIQUID
- HPWS - HEAT PUMP WATER SUPPLY
- HPWR - HEAT PUMP WATER RETURN

ABBREVIATIONS

AC	AIR CONDITIONING, AIR CONDITIONING UNIT
AD	ACCESS DOOR
AF/BI FAN	AIRFOIL/BACKWARD INCLINED FAN
AFF	ABOVE FINISHED FLOOR
AHU	AIR HANDLING UNIT
AMB	AMBIENT
APD	AIR PRESSURE DROP
B	BOILER
BD	GRAVITY BACKDRAFT DAMPER
BFP	BACK FLOW PREVENTER
BHP	BRAKE HORSEPOWER
BOD	BOTTOM OF DUCT
BOR	BOTTOM OF REGISTER
BOU	BOTTOM OF UNIT
CDA	CEILING AIR DIFFUSER (TYPE A)
CFM	CUBIC FEET OF STANDARD AIR PER MINUTE
CO	CLEANOUT
CONT	CONTINUATION
CUH	CABINET UNIT HEATER
CW	CITY WATER
DB	DRY BULB
DI	DUCTILE IRON
DIA	DIAMETER
DM	DAMPER MOTOR
E	EXHAUST
EAR	EXHAUST AIR RELIEF
EAT	ENTERING AIR TEMPERATURE
EF	EXHAUST FAN
EL/ELEV	ELEVATION
ER-1	EXHAUST AIR REGISTER (TYPE 1)
ES	ENTHALPY SENSOR
ESP	EXTERNAL STATIC PRESSURE
EUH	ELECTRIC UNIT HEATER
EWT	ENTERING WATER TEMPERATURE
F.A.	FREE AREA
F.C.	FLEXIBLE CONNECTOR
FD	FIRE DAMPER WITH ACCESS DOOR, FLOOR DRAIN
FIN FLR	FINISHED FLOOR
FPM	FEET PER MINUTE
FRP	FIBROUS REINFORCED PLASTIC (FIBERGLASS)
GPM	GALLONS PER MINUTE
H	HEATING
HP	HORSEPOWER
HV	HEATING VENTILATING UNIT
HVAC	HEATING VENTILATING AIR CONDITIONING UNIT
HW	HOT WATER (DOMESTIC)
HWP	HOT WATER CIRCULATING PUMP
IN. WG	INCHES OF WATER GAGE
L	LOUVER
LAT	LEAVING AIR TEMPERATURE
LAV	LAVATORY
LF	LINEAR FEET
LWT	LEAVING WATER TEMPERATURE
MAU	MAKEUP AIR UNIT
MD	MOTORIZED DAMPER
MFG	MANUFACTURER
NC	NORMALLY CLOSED, NOISE CRITERIA
NG	NATURAL GAS
NK	NECK
NO	NORMALLY OPEN
NPW	NON PORTABLE WATER
OA	OUTSIDE AIR
OAI	OUTSIDE AIR INTAKE
P	PUMP
PD	PRESSURE DROP
PF	PROPELLER FAN
0, PH	PHASE
PS	PRESSURE SENSOR, PRESSURE SWITCH
RH	RELATIVE HUMIDITY
RL	REFRIGERANT LIQUID
RO	ROOF OPENING
RPM	REVOLUTIONS PER MINUTE
RR-1	RETURN AIR REGISTER (TYPE 1)
RS	REFRIGERANT SUCTION, ROOF SUMP
SAN	SANITARY
SD	SMOKE DETECTOR, SMOKE DAMPER, SUPPLY DIFFUSER
SF	SUPPLY AIR FAN
SP	STATIC PRESSURE
SPEC	SPECIFICATION
SR-1	SUPPLY AIR REGISTER
	SUPPLY AIR REGISTER (TYPE 1)
SV	SOLENOID VALVE
T	THERMOSTAT
T-1	SPACE THERMOSTAT OR SENSOR
T-2	OUTSIDE AIR THERMOSTAT OR SENSOR
T-3	LOW LIMIT THERMOSTAT (FREEZE STAT)
T-4	HI LIMIT THERMOSTAT (FIRESTAT)
T-5	DISCHARGE THERMOSTAT
T-7	NIGHT SETBACK THERMOSTAT
TEMP	TEMPERATURE
TOD	TOP OF DUCT
TOU	TOP OF UNIT
TSP	TOTAL STATIC PRESSURE
TYP	TYPICAL
UH	UNIT HEATER
UTR	UP THROUGH ROOF
V	VOLTS, VENTILATING, PLUMBING VENT
VAV	VARIABLE AIR VOLUME
VC	COOLING CONTROL VALVE
VEL	VELOCITY
VH	HEATING CONTROL VALVE
VD	VOLUME DAMPER
VTR	VENT THROUGH ROOF (PLUMBING)
W/	WITH
WB	WET BULB
WC	WATER COLUMN, WATER CLOSET
WPD	WATER PRESSURE DROP
10X10 CD-1	10X10 SQUARE NECK SIZE, CEILING DIFFUSER (TYPE 1)
10"ø CD-1	10" ROUND NECK SIZE, CEILING DIFFUSER (TYPE 1)
400-4	400 CFM, 4 WAY BLOW

GENERAL NOTES

1. ALL DUCT DIMENSIONS ARE CLEAR DIMENSIONS TO INSIDE OF DUCT. DIMENSIONS TO DUCTS FROM FLOOR OR WALL SHALL BE TO THE OUTSIDE OF DUCT. WHERE INTERNAL INSULATION IS REQUIRED, THE DUCT SIZE SHALL BE INCREASED TO GIVE CLEAR INSIDE DIMENSIONS.
2. EQUIPMENT SIZES AND LOCATIONS ARE APPROXIMATE. ACTUAL DIMENSIONS TO BE DETERMINED BY EQUIPMENT FURNISHED. COORDINATE FINAL EQUIPMENT SIZE WITH STRUCTURAL TRADES FURNISHING HOUSEKEEPING PADS.
3. FINAL OPENING DIMENSIONS, CONCRETE PAD SIZES, AND LOCATIONS MUST BE COORDINATED DURING CONSTRUCTION WITH APPROVED EQUIPMENT.
4. FINAL SIZES OF PIPING CONNECTIONS TO ALL EQUIPMENT SHALL BE DETERMINED BY EQUIPMENT FURNISHED.
5. FOR LOUVER LOCATIONS SEE STRUCTURAL DRAWINGS.
6. ALL PIPING AND DUCTS IN FINISHED ROOMS SHALL BE CONCEALED IN FURRED CHASES OR SUSPENDED CEILINGS. ACCESS DOORS SHALL BE INSTALLED FOR ANY CONCEALED DEVICE REQUIRING ADJUSTMENT.
7. FOR INTERLOCKING WIRING SCHEMATICS SEE ELECTRICAL DRAWINGS.
8. THE SYMBOLS AND ABBREVIATIONS LIST ON THIS SHEET IS A COMPREHENSIVE STANDARD GUIDE INTENDED FOR GENERAL USE ON ALL PROJECTS. THEREFORE, NOT ALL THE SYMBOLS AND ABBREVIATIONS CONTAINED IN THIS LIST ARE NECESSARILY USED ON THIS PARTICULAR PROJECT AND SHOULD BE USED FOR CLARIFICATION ONLY.

User:TTHOMAS Spec:AUS-NCSMOD File:I:\ACAD\PROJ\GABPA134 - CSO GROUP 1\BID PACKAGE 2\SHEETS\HVAC & PLUMBING\HP-001.DWG Scale:1:1 SavedDate:7/18/2019 Time:14:37 Plot Date: Thomas, Travis; 7/31/2019; 09:17 : Layout:71

COPYRIGHT:
ARCADIS U.S., INC.
2016

IF THIS BAR IS NOT 1" INDICATED SCALE IS INCORRECT

NO.	DATE	ISSUED FOR	BY
0	JUL 2019	BIDDING	HG

SEALS

GEORGIA REGISTERED No. PE044219 PROFESSIONAL ENGINEER ANDREW R. TUTTLE

ARCADIS
BPA
A Joint Venture
2839 Paces Ferry Road
Suite 900
Atlanta, GA 30339
Tel: 770-431-8666
Fax: 770-435-2666
www.arcadis-us.com

RESURGENS ATLANTA 1847 1901

ATLANTA, GEORGIA
CITY OF ATLANTA
DEPARTMENT OF WATERSHED MANAGEMENT

EAST AREA WATER QUALITY CONTROL FACILITY IMPROVEMENTS

W.01.02.0085

SHEET TITLE

HVAC LEGEND AND NOTES

DATE: JULY 2019
PROJECT NO.: GABPA134
DESIGNED BY: B. LOHMAN
DRAWN BY: J. BROWN
CHECKED BY: B. LOHMAN

SCALE: NONE

HP-001

SHEET 71 OF 150

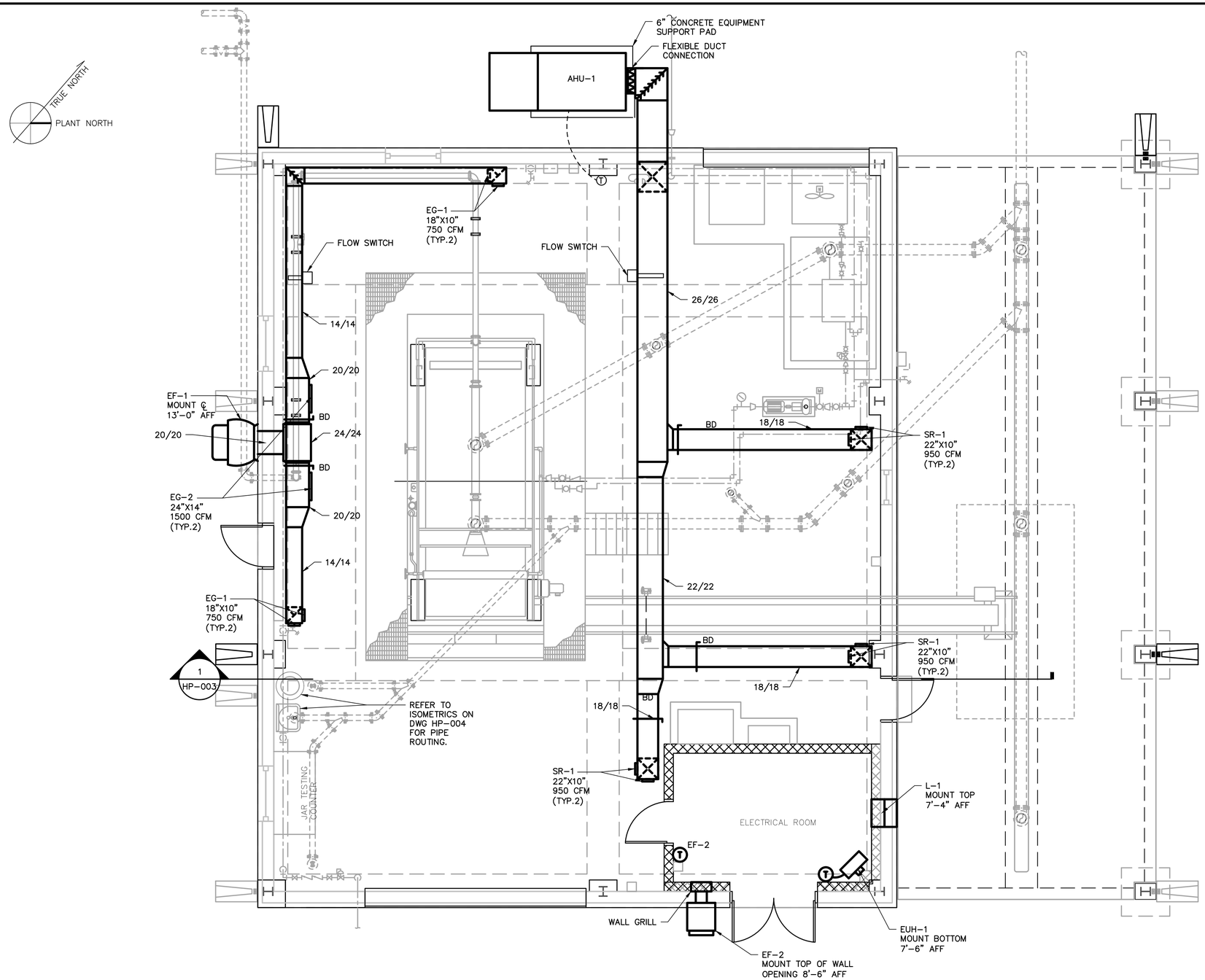

SLUDGE DEWATERING BUILDING – PLAN

SCALE: 1/4" = 1'

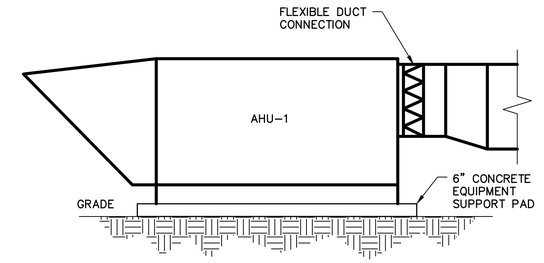

AHU-1 DETAIL

SCALE: 1/2" = 1'

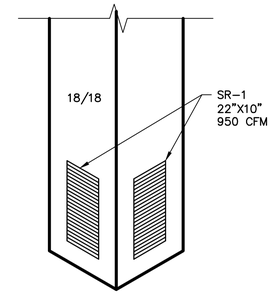

SR-1 DETAIL

SCALE: N.T.S.

NOTES:

1. INSTALL DUCTWORK DOWN TO 1'-0" AFF.

COPYRIGHT:
ARCADIS U.S., INC.
2016

IF THIS BAR IS NOT 1" INDICATED SCALE IS INCORRECT

NO.	DATE	ISSUED FOR	BY
0	JUL 2019	BIDDING	HG

SEALS

GEORGIA REGISTERED No. PE044019 PROFESSIONAL ENGINEER ANDREW R. TUTTLE

ARCADIS
BPA
A Joint Venture
2839 Paces Ferry Road
Suite 900
Atlanta, GA 30339
Tel: 770-431-8666
Fax: 770-435-2666
www.arcadis-us.com

ATLANTA, GEORGIA
CITY OF ATLANTA
DEPARTMENT OF WATERSHED MANAGEMENT

EAST AREA WATER QUALITY CONTROL FACILITY IMPROVEMENTS

W.01.02.0085

SHEET TITLE

SLUDGE DEWATERING BUILDING HVAC PLAN

DATE:	JULY 2019
PROJECT NO.:	GABPA134
DESIGNED BY:	B. LOHMAN
DRAWN BY:	J. BROWN
CHECKED BY:	B. LOHMAN

SCALE: AS SHOWN

HP-002

SHEET 72 OF 150

User: TTHOMAS Spec: AUS-NCSMOD File: I:\ACAD\PROJ\GABPA134 - CSO GROUP 1\BID PACKAGE 2\SHEETS\HVAC & PLUMBING\HP-002.DWG Scale: 1:1 Saved Date: 7/30/2019 Time: 13:08 Plot Date: Thomas, Travis; 7/31/2019; 09:19 ; Layout: 72

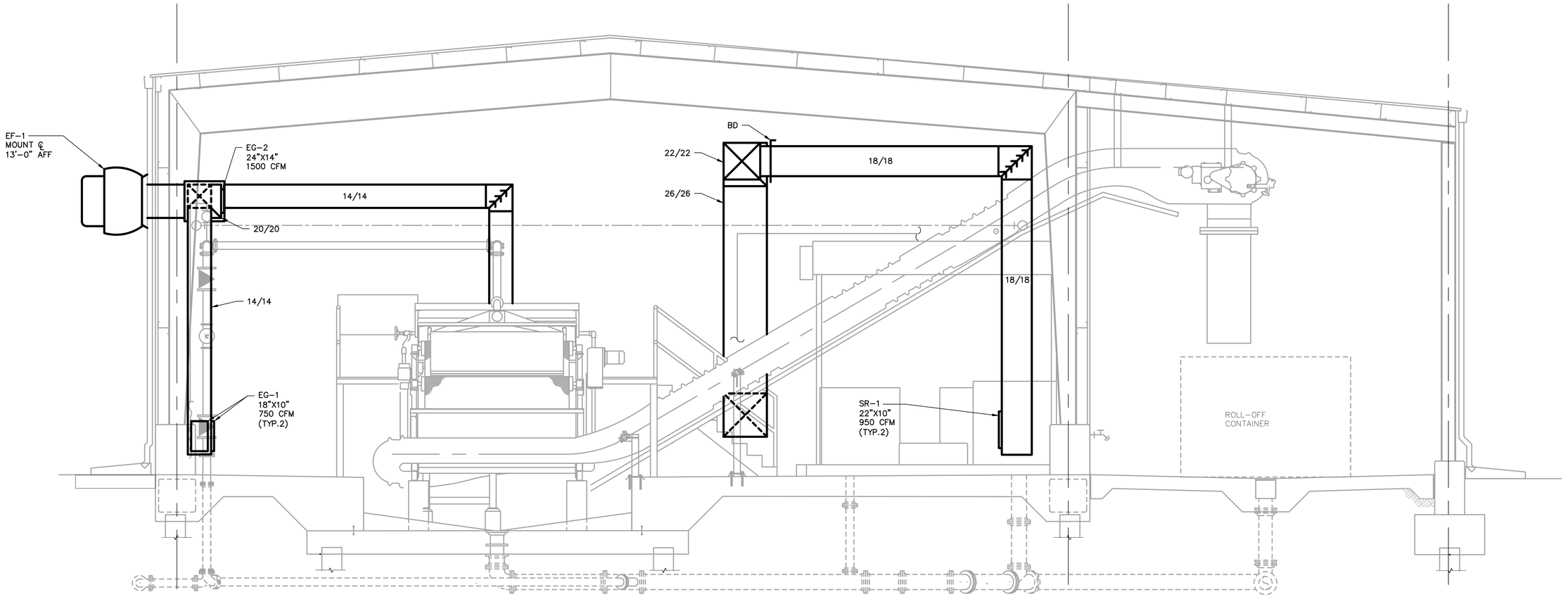

1 HP-002 SLUDGE DEWATERING BUILDING – SECTION

0 2' 4' 6'

User:THOMAS Spec:AUS-NCSMOD File:I:\ACAD\PROJ\GABPA134 – CSO GROUP 1\BID PACKAGE 2\SHEETS\HVAC & PLUMBING\HP-003.DWG Scale:1:1 SavedDate:7/30/2019 Time:10:33 Plot Date: Thomas, Travis; 7/31/2019; 09:20 ; Layout:73

COPYRIGHT:
ARCADIS U.S., INC.
2016

IF THIS BAR IS NOT 1" INDICATED SCALE IS INCORRECT

NO.	DATE	ISSUED FOR	BY
0	JUL 2019	BIDDING	HG

SEALS

GEORGIA REGISTERED PROFESSIONAL ENGINEER No. PE044218 ANDREW R. TUTTLE

ARCADIS
BPA
A Joint Venture
2839 Paces Ferry Road
Suite 900
Atlanta, GA 30339
Tel: 770-431-8666
Fax: 770-435-2666
www.arcadis-us.com

ATLANTA, GEORGIA
CITY OF ATLANTA
DEPARTMENT OF WATERSHED MANAGEMENT

EAST AREA WATER QUALITY CONTROL FACILITY IMPROVEMENTS

W.01.02.0085

SHEET TITLE

SLUDGE DEWATERING BUILDING HVAC SECTION

DATE:	JULY 2019
PROJECT NO.:	GABPA134
DESIGNED BY:	B. LOHMAN
DRAWN BY:	J. BROWN
CHECKED BY:	B. LOHMAN

SCALE: 3/8"=1'

HP-003

SHEET 73 OF 150

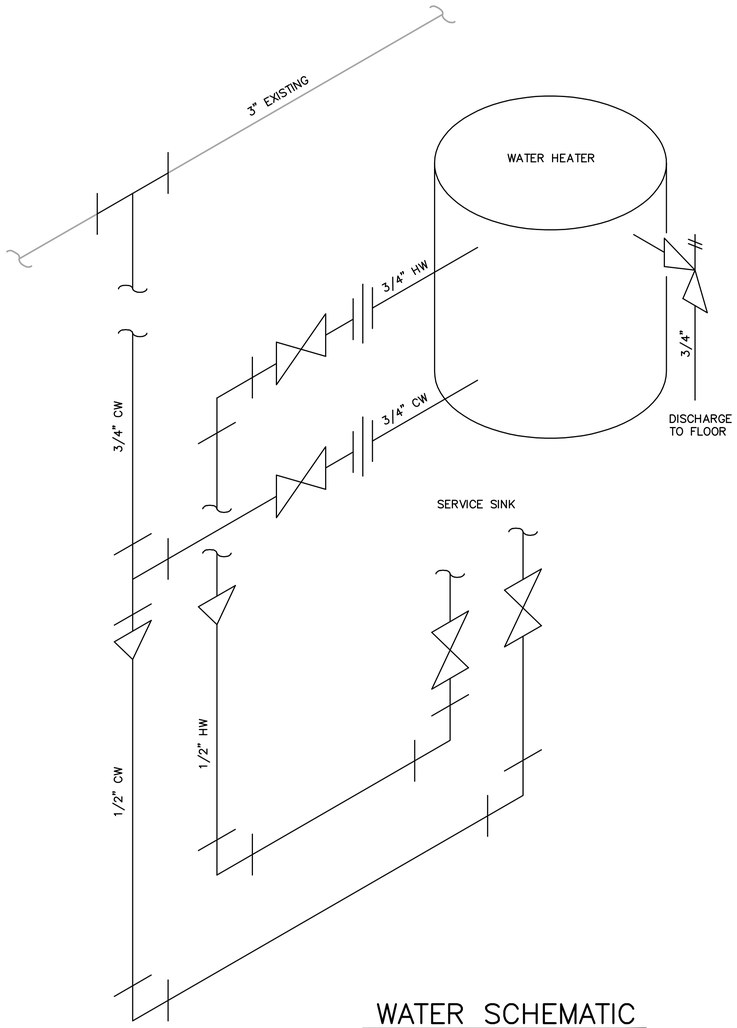

WATER SCHEMATIC FOR SERVICE SINK

SCALE: N.T.S.

NOTE: REFER TO SPEC FOR WATER HEATER INFORMATION.

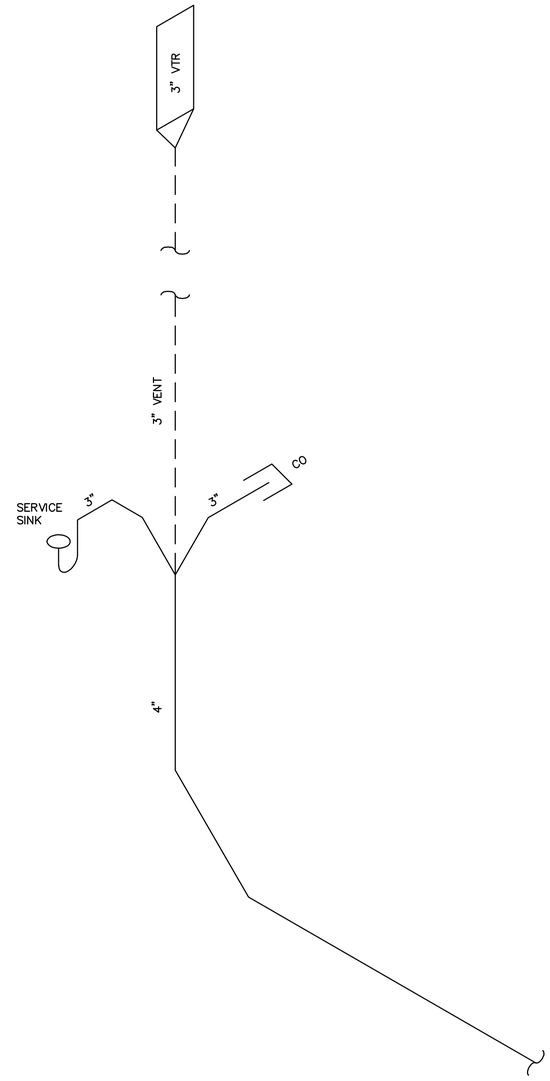

SANITARY SCHEMATIC FOR SERVICE SINK

SCALE: N.T.S.

NOTE: REFER TO SPEC FOR SERVICE SINK INFORMATION.

COPYRIGHT:
ARCADIS U.S., INC.
2016

IF THIS BAR IS NOT 1" INDICATED SCALE IS INCORRECT

NO.	DATE	ISSUED FOR	BY
0	JUL 2019	BIDDING	HG

SEALS

GEORGIA REGISTERED No. PE044213 PROFESSIONAL ENGINEER ANDREW R. TUTTLE

ARCADIS
BPA
A Joint Venture
2839 Paces Ferry Road
Suite 900
Atlanta, GA 30339
Tel: 770-431-8666
Fax: 770-435-2666
www.arcadis-us.com

ATLANTA, GEORGIA
CITY OF ATLANTA
DEPARTMENT OF WATERSHED MANAGEMENT

EAST AREA WATER QUALITY CONTROL FACILITY IMPROVEMENTS

W.01.02.0085

SHEET TITLE

SLUDGE DEWATERING BUILDING PLUMBING SCHEMATICS

DATE:	JULY 2019
PROJECT NO.:	GABPA134
DESIGNED BY:	B. LOHMAN
DRAWN BY:	J. BROWN
CHECKED BY:	B. LOHMAN

SCALE: AS SHOWN

HP-004

SHEET 74 OF 150

User:THOMAS Spec:AUS-NCSMOD File:I:\ACAD\PROJ\GABPA134 - CSO GROUP 1\BID PACKAGE 2\SHEETS\HVAC & PLUMBING\HP-004.DWG Scale:1:1 SavedDate:7/18/2019 Time:14:41 Plot Date: Thomas, Travis; 7/31/2019; 09:22 ; Layout:74

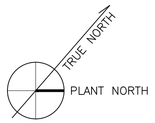

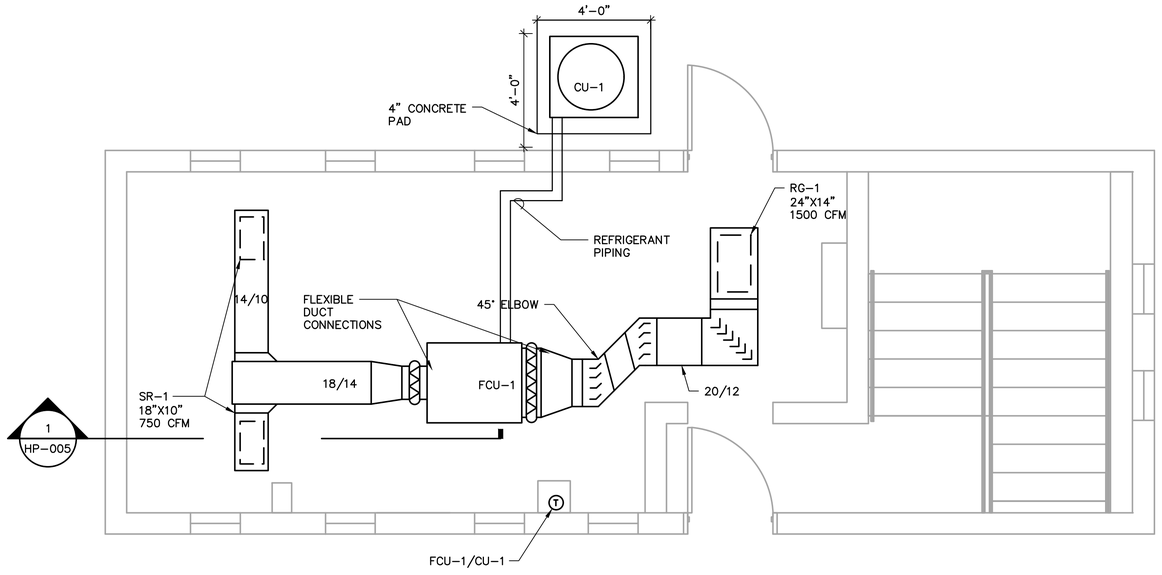

SLUDGE PUMPING STATION ELECTRICAL ROOM

SCALE: 3/8" = 1'-0"

0 2' 4' 6'

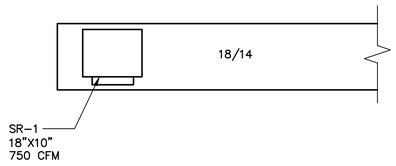

1 HP-005 SECTION

SCALE: 3/4" = 1'-0"

0 1' 2' 3'

COPYRIGHT:
ARCADIS U.S., INC.
2016

IF THIS BAR IS NOT 1" INDICATED SCALE IS INCORRECT

NO.	DATE	ISSUED FOR	BY
0	JUL 2019	BIDDING	HG

SEALS

GEORGIA REGISTERED No. PE044215 PROFESSIONAL ENGINEER ANDREW R. TUTTLE

ARCADIS
BPA
A Joint Venture
2839 Paces Ferry Road
Suite 900
Atlanta, GA 30339
Tel: 770-431-8666
Fax: 770-435-2666
www.arcadis-us.com

ATLANTA, GEORGIA
CITY OF ATLANTA
DEPARTMENT OF WATERSHED MANAGEMENT

EAST AREA WATER QUALITY CONTROL FACILITY IMPROVEMENTS

W.01.02.0085

SHEET TITLE

SLUDGE PUMP STATION HVAC PLAN

DATE: JULY 2019
PROJECT NO.: GABPA134
DESIGNED BY: B. LOHMAN
DRAWN BY: J. BROWN
CHECKED BY: B. LOHMAN

SCALE: AS SHOWN

HP-005

SHEET 75 OF 150

User:THOMAS Spec:AUS-NCSMOD File:I:\ACAD\PROJ\GABPA134 - CSO GROUP 1\BID PACKAGE 2\SHEETS\HVAC & PLUMBING\HP-005.DWG Scale:1:1 SavedDate:7/30/2019 Time:13:39 Plot Date: Thomas, Travis; 7/31/2019; 09:23 ; Layout:75

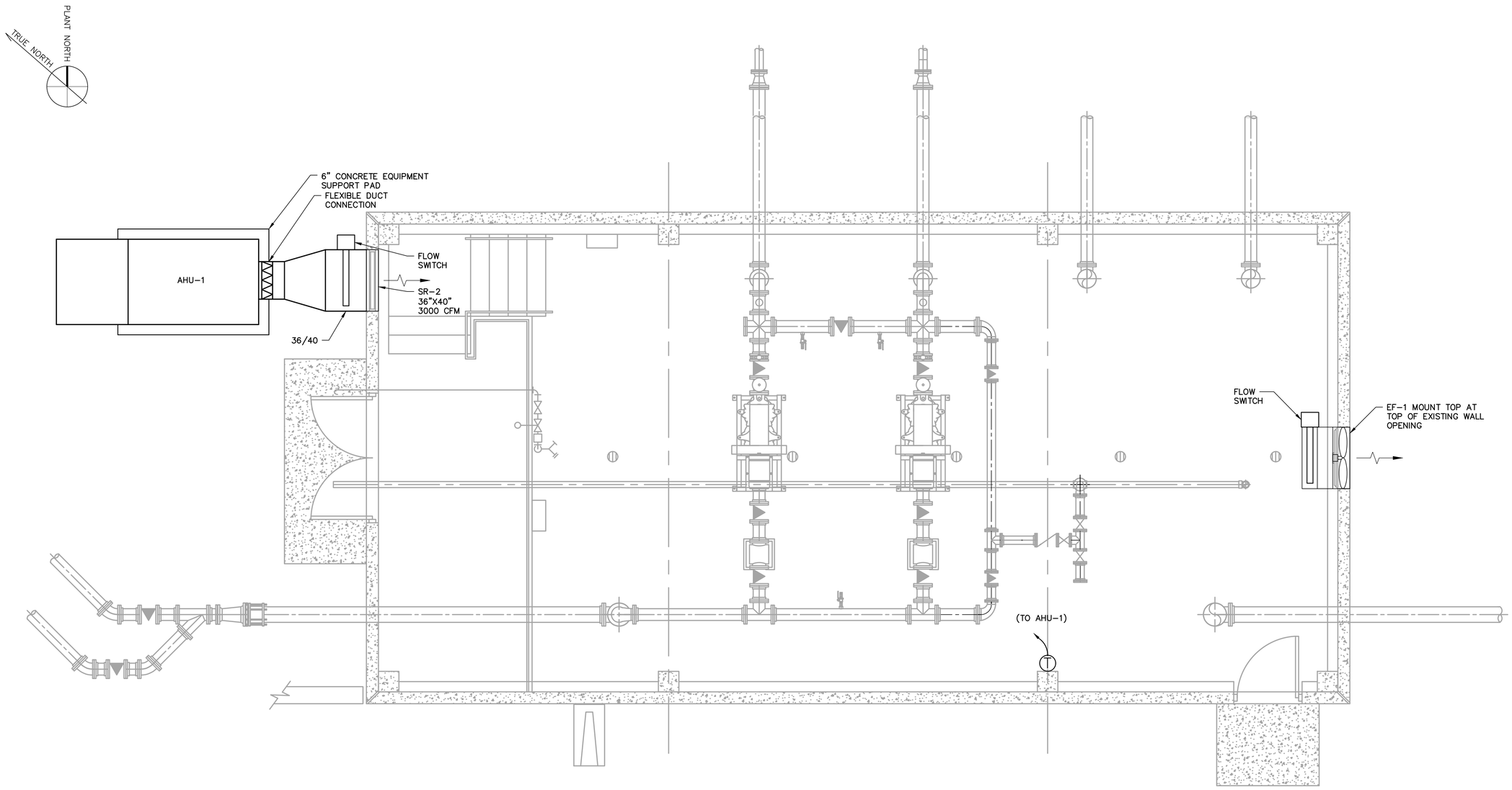

SOLIDS PROCESSING PUMP STATION HVAC PLAN

SCALE: 3/8" = 1'-0"

0 2' 4' 6'

COPYRIGHT:
ARCADIS U.S., INC.
2016

IF THIS BAR IS NOT 1" INDICATED SCALE IS INCORRECT

NO.	DATE	ISSUED FOR	BY
0	JUL 2019	BIDDING	HG

SEALS

GEORGIA REGISTERED No. PE044215 PROFESSIONAL ENGINEER ANDREW R. TUTTLE

ARCADIS
BPA
A Joint Venture
2839 Paces Ferry Road
Suite 900
Atlanta, GA 30339
Tel: 770-431-8666
Fax: 770-435-2666
www.arcadis-us.com

ATLANTA, GEORGIA
CITY OF ATLANTA
DEPARTMENT OF WATERSHED MANAGEMENT

EAST AREA WATER QUALITY CONTROL FACILITY IMPROVEMENTS

W.01.02.0085

SHEET TITLE

SOLIDS PROCESSING PUMP STATION HVAC PLAN

DATE:	JULY 2019
PROJECT NO.:	GABPA134
DESIGNED BY:	B. LOHMAN
DRAWN BY:	J. BROWN
CHECKED BY:	B. LOHMAN

SCALE: NONE

HP-006

SHEET 76 OF 150

User: TTHOMAS Spec: AUS-NCSMOD File: I:\ACAD\PROJ\GABPA134 - CSO GROUP 1\BID PACKAGE 2\SHEETS\HVAC & PLUMBING\HP-006.DWG Scale: 1:1 SavedDate: 7/30/2019 Time: 10:33 Plot Date: Thomas, Travis; 7/31/2019; 09:24 ; Layout: 76

AIR HANDLING UNIT SCHEDULE															
TAG	LOCATION	TYPE	SA	OA	SUPPLY FAN			HEATING SECTION	MCA	FILTER		ELECTRICAL	AHU		REMARKS
			CFM	CFM	ESP (IN)	HP	BLOWER	OUTPUT (KW)		TYPE	MERV	VOLTAGE	MAKE	MODEL	
AHU-1	SLUDGE DEWATERING BUILDING	MAKE-UP AIR UNIT	5700	5700	0.45	3	CENTRIFUGAL	90	116.5	2" PLEATED	8	480/3/60	REZNOR	REH-90D	1,2,3,4,5,6
AHU-1	SOLIDS PROCESSING PUMP STATION	MAKE-UP AIR UNIT	3000	3000	0.25	1	CENTRIFUGAL	60	80.4	2" PLEATED	8	480/3/60	REZNOR	REH-60D	1,2,3,4,5,6

REMARKS:
1. PROVIDE ROOF CURB.
2. 100% OUTSIDE AIR UNIT.
3. PROVIDE WALL MOUNTED HEATING THERMOSTAT.
4. PROVIDE ELECTRIC HEATER WITH SCR ELECTRONIC MODULATION HEATING.
5. PROVIDE INTAKE WEATHER HOOD WITH SCREEN AND RAIN BAFFLES.
6. PROVIDE FLOW SWITCH FOR DUCT-MOUNTED SUPPLY DUCT, WITH ALARM UPON FAILURE OF UNIT.

ELECTRIC UNIT HEATER SCHEDULE											
TAG	LOCATION	TYPE	AIRFLOW DISCHARGE	KW	AIRFLOW (CFM)	TEMP. RISE (DEGREE F)	THROW (FT)	ELECTRICAL		MAKE	MODEL	REMARKS
								HP	V/PH/HZ			
EUH-1	SLUDGE DEWATERING ELECTRICAL ROOM	BLOWER HEATER	HORIZONTAL	2.6	410	21	12	1/40	480/3/60	CHROMALOX	LUH-02-21-34	1,2,3

REMARKS:
1. PROVIDE UNIT WITH UL LISTED DISCONNECT SWITCH NEMA 4X RATED.
2. PROVIDE WALL MOUNT SWIVEL BRACKET FOR UNIT MOUNTING.
3. PROVIDE 120V WALL MOUNTED THERMOSTAT, CHROMALOX MODEL WR80.

FAN SCHEDULE										
TAG	LOCATION	TYPE	CFM	E.S.P. (IN W.C.)	DRIVE	ELECTRICAL		MAKE	MODEL	REMARKS
						HP	VOLTAGE			
EF-1	SLUDGE DEWATERING BUILDING	WALL MOUNTED CENTIRFUGAL	6,000	0.25	BELT	2	480/3/60	LOREN COOK	ACW-B 195W9B	1,2,3,4,5,9
EF-2	ELECTRICAL ROOM	WALL MOUNTED CENTIRFUGAL	1,000	0.25	BELT	1/4	120/1/60	LOREN COOK	ACW-B 100W3B	1,2,3,4,5,7
EF-1	SOLIDS PROCESSING PUMP STATION	WALL MOUNTED PROPELLER	3,000	0.25	BELT	1/2	480/3/60	LOREN COOK	20XMP	1,3,5,8,9

REMARKS:
1. INTEGRAL PRE-WIRED NEMA 4X DISCONNECT SWITCH.
2. GRAVITY BACKDRAFT DAMPER.
3. STANDARD FINISH.
4. ALUMINUM BIRDSCREEN.
5. SPARE BELT SET.
6. BELT GUARD.
7. SQUARE WALL GRILLE.
8. INTEGRAL WALL HOUSING WITH GRAVITY BACKDRAFT DAMPER AND INLET GUARD.
9. PROVIDE FLOW SWITCH FOR DUCT-MOUNTED EXHAUST DUCT, WITH ALARM UPON FAILURE OF UNIT.

LOUVER SCHEDULE								
MARK	LOCATION	SERVICE	TYPE	SIZE (IN.)	AIRFLOW CFM	FREE AREA (SQ FT)	MAKE	MODEL	REMARKS
L-1	ELECTRICAL ROOM	INTAKE	MOTORIZED W/DAMPER	24"x24"	1000	1.43	RUSKIN	ELC6375DAX	1,2,3,4,5

REMARKS:
1. 6" DEEP, FIXED BLADE WITH INTEGRAL DAMPER, 6063T5 EXTRUDED ALUMINUM CONSTRUCTION.
2. KYNAR OR FLUOROPOLYMER FINISH ON ENTIRE LOUVER AND BIRDSCREEN.
3. BIRDSCREEN MOUNTED ON EXTERIOR.
4. INSECT SCREEN MOUNTED ON INTERIOR.
5. HONEYWELL MODEL M4185 OR EQUAL, 120/1/60.

REGISTER, GRILLE, DIFFUSER SCHEDULE									
MARK	SERVICE	TYPE	STATIC PD (IN WC)	PATTERN	DAMPER	FINISH	MAKE	MODEL	REMARKS
SR	SUPPLY	REGISTER	0.08	DOUBLE DEFLECTION	YES	CLEAR ANODIZE	TITUS	272FS	1,2,3,4
EG	EXHAUST	GRILLE	0.08	EGGCRATE	YES	CLEAR ANODIZE	TITUS	50F	1,2,3,4
RG	RETURN	GRILLE	0.08	EGGCRATE	YES	CLEAR ANODIZE	TITUS	50F	1,2,3,4

REMARKS:
1. ALL ALUMINUM CONSTRUCTION.
2. SEE DRAWING FOR SIZES, AIRFLOW, AND QUANTITY.
3. DUCT MOUNTING.
4. INTEGRAL BALANCING DAMPER.

BALANCING DAMPER SCHEDULE					
MARK	TYPE	MOUNTING TYPE	MAKE	MODEL	REMARKS
BD	OPPOSED BLADE	DUCT	RUSKIN	MD35	1,2,3

REMARKS:
1. GALVANIZED STEEL CONSTRUCTION.
2. ALUMINUM CONSTRUCTION.
3. LOCKING QUADRANT.

SPLIT SYSTEM FAN COIL UNIT SCHEDULE																
TAG	FAN SECTION	E.S.P.	FAN	COOLING CAPACITY		MAKE	INDOOR UNIT MODEL	INDOOR UNIT ELECTRICAL			MAKE	OUTDOOR UNIT MODEL	OUTDOOR UNIT ELECTRICAL			SEER	REMARKS
	CFM	INCHES W.C.	HP	SENSIBLE MBH	TOTAL MBH			VOLTAGE	MCA	MFS			VOLTAGE	MCA	MFS		
FC-1/CU-1	1,500	0.35	1.0	42.3	60.0	TRANE	BCHD-036	208/1/60	9.6	20.0	TRANE	4TTB33060	208/1/60	35.0	60.0	13	1,2,3,4,5,6,7,8,9

REMARKS:
1. PROVIDE DRAIN PAN & CONDENSATE DRAIN PIPING ROUTED TO EXERIOR OF BUILDING.
2. PROVIDE HARD-WIRED THERMOSTAT FOR 24 VAC CONTROL VOLTAGE.
3. PROVIDE PRE-CHARGED LINE SETS FOR INSTALLATION OF REFRIGERANT PIPING.
4. PROVIDE INDOOR UNIT WITH 2-INCH MERV 8 FILTERS.
5. REFRIGERANT R-410A.
6. EVAPORATOR COIL ENTERING AIR DRY BULB/WET BULB TEMPERATURES 80/67 DEGREES F.
7. CONDENSING UNIT ENTERING AIR DRY BULB TEMPERATURE 95 DEGREES F.
8. PROVIDE LOW AMBIENT OPERATION CAPABILITY.
9. PROVIDE DISCONNECT SWITCH.

COPYRIGHT:
ARCADIS U.S., INC.
2016

IF THIS BAR IS NOT 1" INDICATED SCALE IS INCORRECT

NO.	DATE	ISSUED FOR	BY
0	JUL 2019	BIDDING	HG

SEALS

GEORGIA REGISTERED No. PE044215 PROFESSIONAL ENGINEER ANDREW R. TUTTLE 7/31/2019

ARCADIS
BPA
A Joint Venture
2839 Paces Ferry Road
Suite 900
Atlanta, GA 30339
Tel: 770-431-8666
Fax: 770-435-2666
www.arcadis-us.com

ATLANTA, GEORGIA
CITY OF ATLANTA
DEPARTMENT OF WATERSHED MANAGEMENT

EAST AREA WATER QUALITY CONTROL FACILITY IMPROVEMENTS

W.01.02.0085

SHEET TITLE

HVAC EQUIPMENT SCHEDULES

DATE: JULY 2019
PROJECT NO.: GABPA134
DESIGNED BY: B. LOHMAN
DRAWN BY: J. BROWN
CHECKED BY: B. LOHMAN

SCALE: NONE

HP-007

SHEET 77 OF 150

User: TTHOMAS Spec: AUS-NCSMOD File: I:\ACAD\PROJ\GABPA134 - CSO GROUP 1\BID PACKAGE 2\SHEETS\HVAC & PLUMBING\HP-007.DWG Scale: 1:1 SavedDate: 7/30/2019 Time: 10:32 Plot Date: Thomas, Travis; 7/31/2019; 09:26 ; Layout: 77

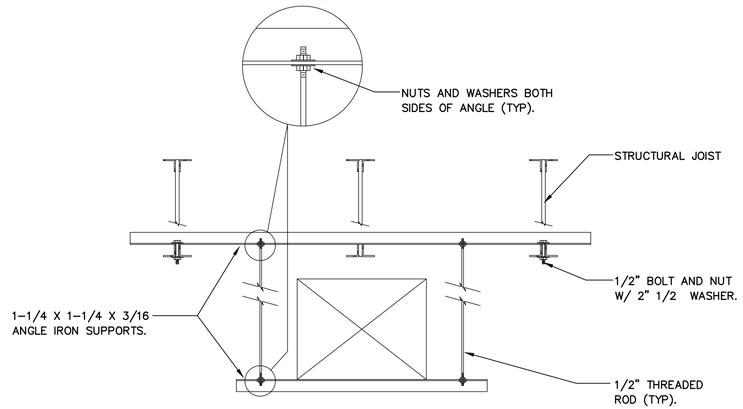

DUCT HANGER DETAIL

SCALE: N.T.S.

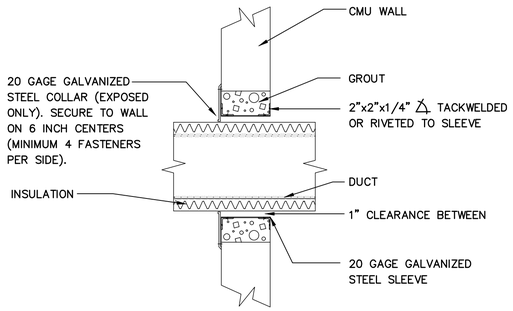

DUCT PENETRATION THROUGH WALL (NOT APPLICABLE TO FIRE-RATED WALLS)

SCALE: N.T.S.

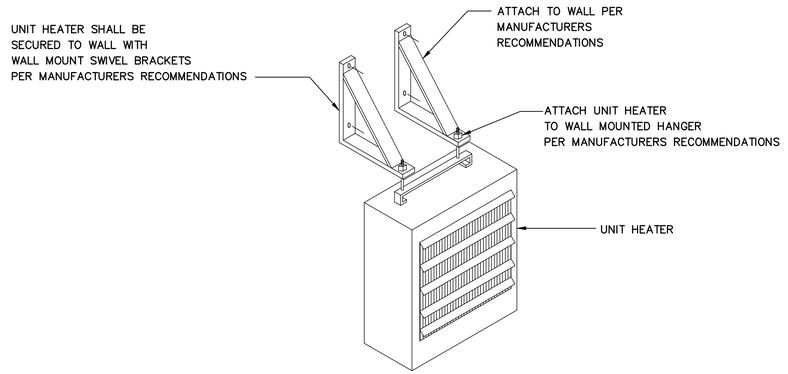

ELECTRIC UNIT HEATER DETAIL

SCALE: N.T.S.

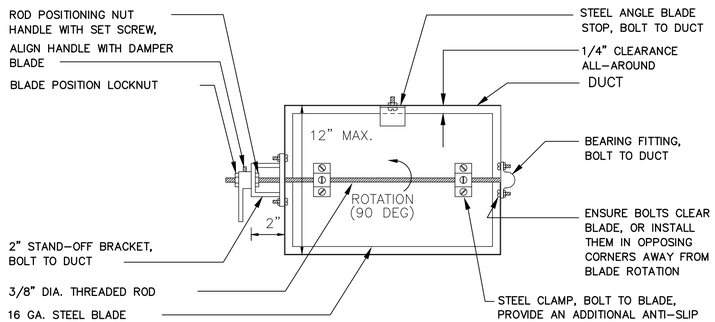

NOTES:

1. DAMPERS FOR ROUND DUCTS SHALL BE SIMILAR TO THE DAMPER SHOWN ABOVE.
2. ENSURE THAT FULL 90° DAMPER BLADE MOVEMENT IS UNOBSTRUCTED.
3. FOR DUCT HEIGHTS MORE THAN 12", PROVIDE FACTORY-FABRICATED OPPOSED BLADE DAMPERS

MANUAL DAMPER (ADJUSTABLE SINGLE-BLADE BALANCING TYPE)

SCALE: N.T.S.

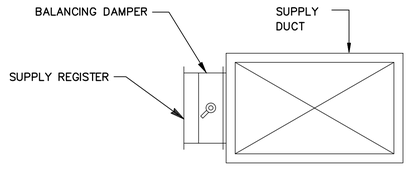

SUPPLY AIR REGISTER DETAIL

SCALE: N.T.S.

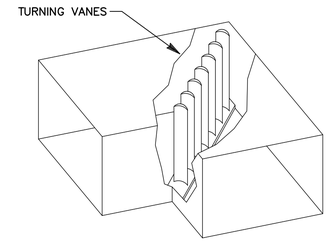

TYPICAL ELBOW DETAIL

SCALE: N.T.S.

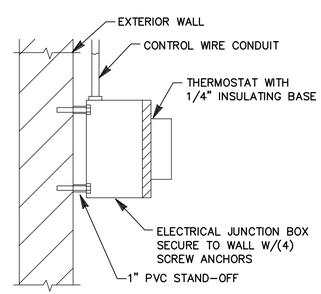

WALL MOUNTED THERMOSTAT

SCALE: N.T.S.

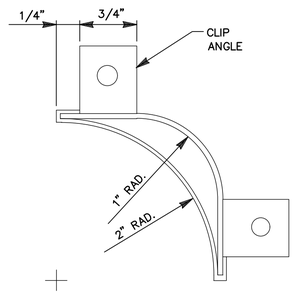

TYPICAL TURNING VANE DETAIL

SCALE: N.T.S.

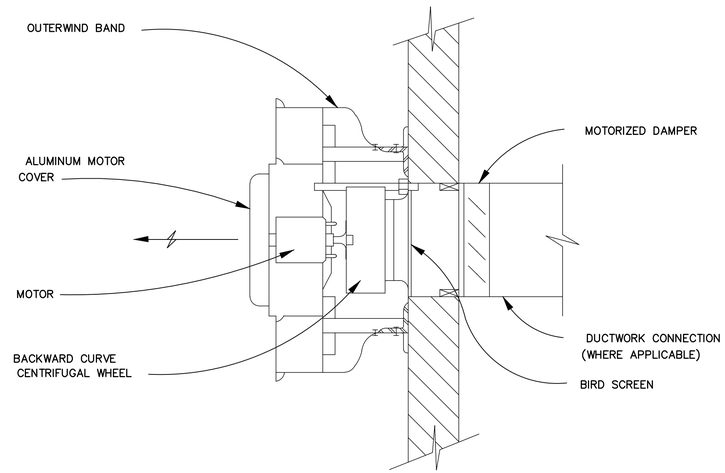

CENTRIFUGAL WALL EXHAUST FAN DETAIL

SCALE: N.T.S.

COPYRIGHT: ARCADIS U.S., INC. 2016

IF THIS BAR IS NOT 1" INDICATED SCALE IS INCORRECT

NO.	DATE	ISSUED FOR	BY
0	JUL 2019	BIDDING	HG

SEALS

GEORGIA REGISTERED No. PE044211 PROFESSIONAL ENGINEER ANDREW R. TUTTLE

ARCADIS BPA A Joint Venture
2839 Paces Ferry Road
Suite 900
Atlanta, GA 30339
Tel: 770-431-8666
Fax: 770-435-2666
www.arcadis-us.com

ATLANTA, GEORGIA
CITY OF ATLANTA
DEPARTMENT OF WATERSHED MANAGEMENT

EAST AREA WATER QUALITY CONTROL FACILITY IMPROVEMENTS

W.01.02.0085

SHEET TITLE

HVAC AND PLUMBING DETAILS 1

DATE:	JULY 2019
PROJECT NO.:	GABPA134
DESIGNED BY:	B. LOHMAN
DRAWN BY:	J. BROWN
CHECKED BY:	B. LOHMAN

SCALE: NONE

HP-008

SHEET 78 OF 150

User: TTHOMAS Spec: AUS-NCSM0D File: I:\ACAD\PROJ\GABPA134 - CSO GROUP 1\BID PACKAGE 2\SHEETS\HVAC & PLUMBING\HP-008.DWG Scale: 1:1 SavedDate: 7/18/2019 Time: 15:27 Plot Date: Thomas, Travis; 7/31/2019; 09:27 ; Layout: 78

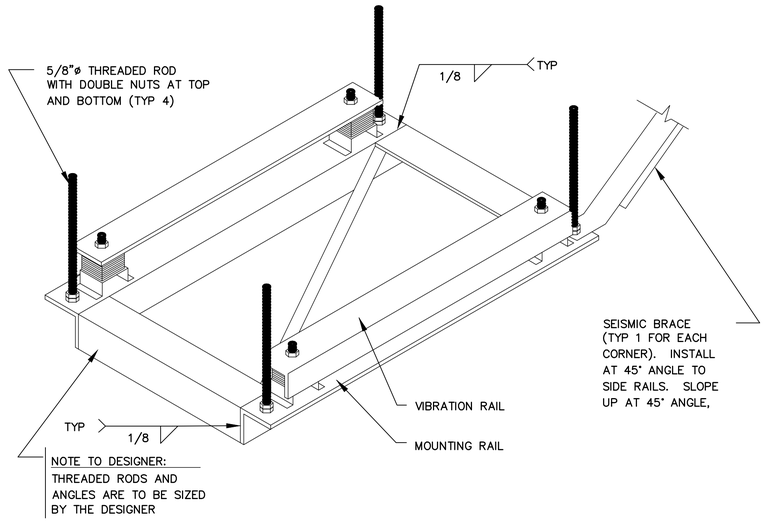

PLATFORM FOR SUSPENDING EQUIPMENT FROM ROOF STRUCTURE

SCALE: N.T.S.

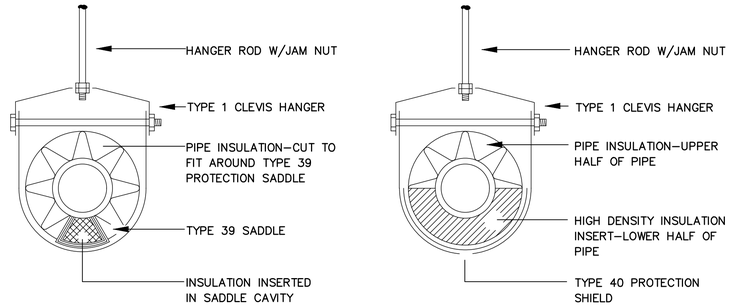

HANGER DETAILS – INSULATED PIPE

SCALE: N.T.S.

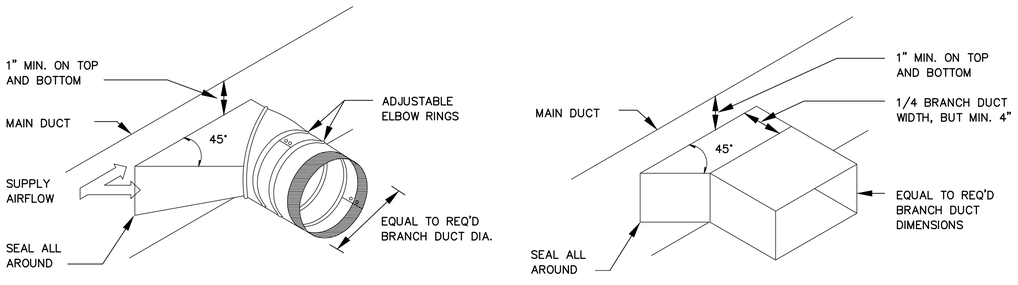

TYPICAL BRANCH TAKE–OFF FITTING

SCALE: N.T.S.

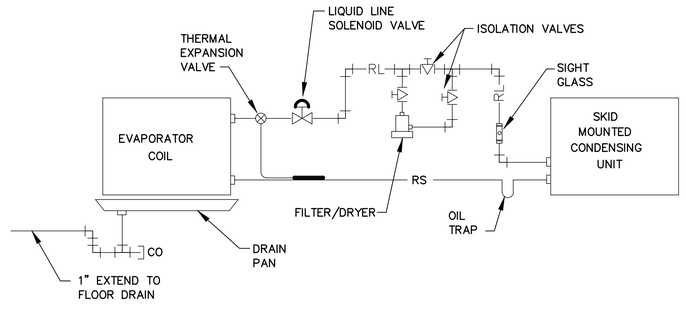

NOTE: SIZES PER MANUFACTURER'S SPECIFICATIONS

TYPICAL REFRIGERANT PIPING DETAIL

SCALE: N.T.S.

User: TTHOMAS Spec:AUS-NCSMOD File:I:\ACAD\PROJ\GABPA134 – CSO GROUP 1\BID PACKAGE 2\SHEETS\HVAC & PLUMBING\HP-009.DWG Scale:1:1 SavedDate:7/18/2019 Time:15:29 Plot Date: Thomas, Travis; 7/31/2019; 09:28 ; Layout:79

COPYRIGHT: ARCADIS U.S., INC. 2016

IF THIS BAR IS NOT 1" INDICATED SCALE IS INCORRECT

NO.	DATE	ISSUED FOR	BY
0	JUL 2019	BIDDING	HG

SEALS

GEORGIA REGISTERED PROFESSIONAL ENGINEER NO. PE044215 7/31/2019 ANDREW R. TUTTLE

ARCADIS BPA A Joint Venture
2839 Paces Ferry Road
Suite 900
Atlanta, GA 30339
Tel: 770–431–8666
Fax: 770–435–2666
www.arcadis–us.com

ATLANTA, GEORGIA
CITY OF ATLANTA
DEPARTMENT OF WATERSHED MANAGEMENT

EAST AREA WATER QUALITY CONTROL FACILITY IMPROVEMENTS

W.01.02.0085

SHEET TITLE

HVAC AND PLUMBING DETAILS 2

DATE:	JULY 2019
PROJECT NO.:	GABPA134
DESIGNED BY:	B. LOHMAN
DRAWN BY:	J. BROWN
CHECKED BY:	B. LOHMAN

SCALE: NONE

HP–009

SHEET 79 OF 150

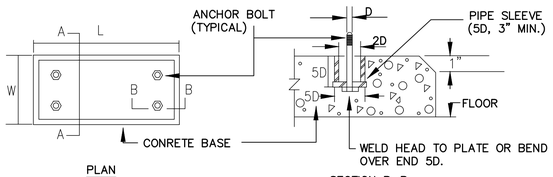

PLAN

SECTION B–B

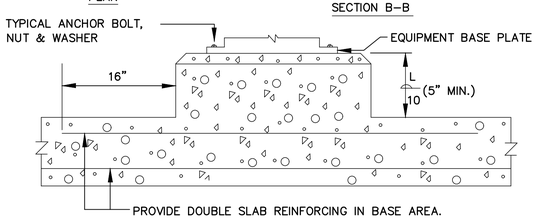

SECTION A–A (BASE POURED WITH FLOOR SLAB)

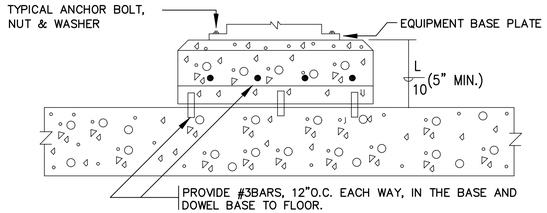

SECTION A–A (BASE NOT POURED WITH SLAB)

EQUIPMENT PAD DETAIL

SCALE: N.T.S.

NOTE:

1. THIS DETAIL APPLIES TO EQUIPMENT NOT SPECIFIED TO BE MOUNTED ON SPRING ISOLATED BASES.
2. L AND W DIMENSIONS SHALL BE 6 INCHES GREATER THAN THE EQUIPMENT BASE PLATE.

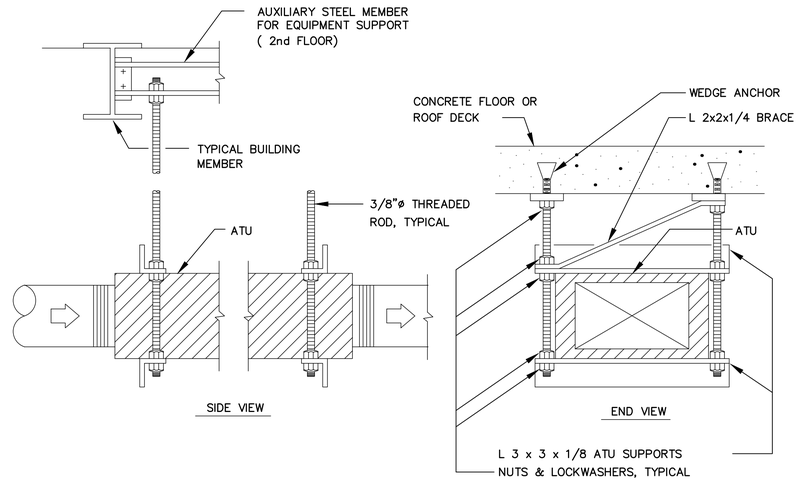

AIR TERMINAL UNIT MOUNTING DETAIL

SCALE: N.T.S.

User:THOMAS Spec:AUS-NCSMOD File:I:\ACAD\PROJ\GABPA134 - CSO GROUP 1\BID PACKAGE 2\SHEETS\HVAC & PLUMBING\HP-010.DWG Scale:1:1 SavedDate:7/18/2019 Time:15:31 Plot Date: Thomas, Travis; 7/31/2019, 09:29 : Layout:80

COPYRIGHT:
ARCADIS U.S., INC.
2016

IF THIS BAR IS NOT 1" INDICATED SCALE IS INCORRECT

NO.	DATE	ISSUED FOR	BY
0	JUL 2019	BIDDING	HG

SEALS

GEORGIA REGISTERED PROFESSIONAL ENGINEER No. PE044213 ANDREW R. TUTTLE

ARCADIS
BPA
A Joint Venture
2839 Paces Ferry Road
Suite 900
Atlanta, GA 30339
Tel: 770-431-8666
Fax: 770-435-2666
www.arcadis-us.com

ATLANTA, GEORGIA
CITY OF ATLANTA
DEPARTMENT OF WATERSHED MANAGEMENT

EAST AREA WATER QUALITY CONTROL
FACILITY IMPROVEMENTS

W.01.02.0085

SHEET TITLE

HVAC AND PLUMBING
DETAILS 3

DATE:	JULY 2019
PROJECT NO.:	GABPA134
DESIGNED BY:	B. LOHMAN
DRAWN BY:	J. BROWN
CHECKED BY:	B. LOHMAN

SCALE: NONE

HP-010

SHEET 80 OF 150

SYMBOLS FOR PLANS

- SURFACE, RECESSED OR PENDANT MOUNTED INCANDESCENT OR HIGH INTENSITY DISCHARGE LIGHTING FIXTURE
- SURFACE, RECESSED, PENDANT MOUNTED, WALL MOUNTED FLUORESCENT LIGHTING FIXTURE OR LED
- WALL MOUNTED INCANDESCENT OR HIGH INTENSITY DISCHARGE LIGHTING FIXTURE
- POLE OR POST–TOP MOUNTED LIGHTING UNIT
- ROADWAY LIGHTING UNIT
- FLOODLIGHT
- WALL MOUNTED EXIT LIGHT
- CEILING OR PENDANT MOUNTED EXIT LIGHT
- BATTERY OPERATED AUXILIARY LIGHTING UNIT MOUNT 7'–6" ABOVE FINISHED FLOOR UNLESS OTHERWISE NOTED
- REMOTE MOUNTED AUXILIARY LIGHTING HEAD MOUNT 7'–6" ABOVE FLOOR
- Sa — SINGLE POLE SWITCH CONTROLS FIXTURES MARKED "a"
- S2b — DOUBLE POLE SWITCH CONTROLS FIXTURES MARKED "b"
- S3c — THREE–WAY SWITCH CONTROLS FIXTURES MARKED "c"
- S4d — FOUR–WAY SWITCH CONTROLS FIXTURES MARKED "d"
- RECEPTACLE – PEDESTAL MOUNTED
- RECEPTACLE – PEDESTAL MOUNTED, 240 VOLT AMPERE RATING AS INDICATED ON PLAN
- DUPLEX RECEPTACLE (GROUND TYPE)
- GROUND FAULT INTERRUPTER RECEPTACLE
- SINGLE RECEPTACLE (GROUND TYPE)
- WELDING RECEPTACLE, 60 A, 3–PHASE, 4 WIRE
- FLOOR MOUNTED RECEPTACLE
- MANUAL MOTOR STARTER
- MAGNETIC MOTOR STARTER
- MAGNETIC MOTOR STARTER AND DISCONNECT SWITCH
- DISCONNECT SWITCH. SIZE AS INDICATED.
- WALL MOUNTED THERMOSTAT – MOUNTED 5'–0" ABOVE FINISHED FLOOR UNLESS OTHERWISE NOTED
- POWER DISTRIBUTION PANEL OR PANELBOARD
- UNIT HEATER
- MOTOR – FOR HORSEPOWER RATING, SEE PANELBOARD SCHEDULE OR SINGLE LINE DIAGRAM
  DC = DC MOTOR
- D = DAMPER MOTOR
  M = MOTORIZED VALVE
- TELEPHONE TERMINAL CABINET, TTB
- TELEPHONE OUTLET, WALL MOUNTED, WIRING AS REQUIRED
- JUNCTION BOX, SIZE PER NEC
- GROUND ROD – COPPER CLAD. 3/4" X 10' LONG.
- TEST WELL GROUND ROD
- EXOTHERMIC WELDED CONNECTION
- CONTROL STATION
- COMBINED CONTROL STATION AND DISCONNECT SWITCH
- VALVE CONTROLLER

LETTER "A" DENOTES TYPE OF FIXTURE;

"3" DENOTES PANELBOARD BRANCH CIRCUIT NO. 3;

"a" DENOTES CONTROLLED BY LOCAL SWITCH "a".

"P" DENOTES FURNISHED WITH POLE.

- CONDUIT RUNS CONCEALED IN FLOOR, WALL AND UNDERGROUND
- CONDUIT RUNS EXPOSED
- CONDUIT TURNING UP OR TOWARD OBSERVER
- CONDUIT TURNING DOWN OR AWAY FROM OBSERVER
- FLEXIBLE CONDUIT
- DIRECT BURIAL CABLE
- G — GROUNDING CABLE. #4/0 BARE, STRANDED CU. UNLESS OTHERWISE NOTED.
- T — CONDUIT FOR TELEPHONE COMPANY'S WIRING
- EQUIPMENT TO BE DEMOLISHED
- E — EXISTING ELECTRICAL UTILITY/CONDUIT/CABLE
- EDB — EXISTING ELECTRICAL DUCT BANK
- SC — EXISTING ELECTRICAL SIGNAL/CONTROL CONDUIT/CABLE
- SCDB — EXISTING SIGNAL/CONTROL DUCT BANK
- E — NEW ELECTRICAL UTILITY/CONDUIT/CABLE
- EDB — NEW ELECTRICAL DUCT BANK
- SC — NEW ELECTRICAL SIGNAL/CONTROL CONDUIT/CABLE
- SCDB — NEW SIGNAL/CONTROL DUCT BANK

NOTE: "E", "EDB", ETC. LETTERS MAY BE OMITTED ON PLAN DRAWINGS.

CONT. SYMBOLS FOR PLANS

- C–324 — HOMERUN, CONDUIT AND WIRE NUMERALS DENOTE RACEWAY NUMBER
- DENOTES SECTION NO. OR DETAIL LETTER DENOTES SHEET NO. ON WHICH SECTIONS OR DETAIL IS EITHER SHOWN AND/OR TAKEN
- P7001 — CONDUIT NUMBER FOR WIRING – SEE SCHEDULE
- A.F.F. — ABOVE FINISHED FLOOR
- W — DENOTES WATERTIGHT EQUIPMENT
- WP — DENOTES WEATHERPROOF EQUIPMENT
- XP — DENOTES EXPLOSIONPROOF EQUIPMENT
- SV — SOLENOID VALVE
- EWC — ELECTRIC WATER COOLER
- CTB — TERMINAL BOX
  CTB = CONTROL WIRING TERMINAL BOX
  STB = SIGNAL WIRING TERMINAL BOX
- TB — JUNCTION BOX WITH TERMINAL STRIP
- J — JUNCTION BOX
- T — TERMINAL BOX
- P — PULL BOX
- MANUFACTURER SUPPLIED HEAT TRACING CABLE
- T — THERMOSTAT
- H — HANDHOLE

FIRE ALARM SYSTEM

- FACP — FIRE ALARM PANEL
- FAA — FIRE ALARM ANNUNCIATOR
- B — FIRE ALARM BELL
- F — MANUAL FIRE ALARM CALL STATION PULL TYPE
- F — FIRE ALARM HORN
- SD — SMOKE DETECTOR
- F — STROBE LIGHT
- F — COMBINED FIRE ALARM HORN AND STROBE
- R — SHUTDOWN RELAY

DOOR ALARM

- DOOR ALARM DOOR SWITCH
- K — DOOR ALARM KEY BYPASS SWITCH

SYMBOLS FOR ONE LINE DIAGRAMS

- 100/15 — MOLDED CASE CIRCUIT BREAKER, THERMAL MAGNETIC TRIP, 3–POLE UNLESS OTHERWISE NOTED. UPPER NUMERAL INDICATES FRAME SIZE. LOWER NUMERAL INDICATES TRIP SETTING.
- MCP/15 — MOTOR CIRCUIT PROTECTOR. NUMERAL INDICATES CONTINUOUS CURRENT RATING. MCPL = WITH CURRENT LIMITING FUSES.
- 100 — UNFUSED DISCONNECT SWITCH. NUMERAL DENOTES AMPERE RATING.
- 100/70 — FUSED DISCONNECT SWITCH, 3–POLE UNLESS OTHERWISE NOTED. UPPER NUMERAL INDICATES FUSE CLIP AMPERE SIZE. LOWER NUMERAL INDICATES FUSE RATING. WHERE "E" IS INDICATED PROVIDE "E" RATED FUSE BASED ON TRANSFORMER'S MANUFACTURERS RECOMMENDATION.
- 3 — CT = CURRENT TRANSFORMER, NUMERAL DENOTES QUANTITY.
- 2PT — PT = POTENTIAL TRANSFORMER, DRAWOUT TYPE NUMERAL DENOTES QUANTITY. CPT = CONTROL POWER TRANSFORMER, DRAWOUT TYPE WITH FUSE.
- 2PT — PT = POTENTIAL TRANSFORMER, NUMERAL DENOTES QUANTITY. CPT = CONTROL POWER TRANSFORMER WITH FUSE.
- FUSED DISCONNECT SWITCH DRAWOUT TYPE
- 2 WINDING TRANSFORMER, SIZE AS NOTED
- 3 WINDING TRANSFORMER, SIZE AS NOTED

MAGNETIC STARTER

FVNR 1a 1b 2

- FVNR = FULL VOLTAGE, NON–REVERSING
- FVR = FULL VOLTAGE, REVERSING
- FVTS = FULL VOLTAGE TWO SPEED
- RVNR = REDUCED VOLTAGE, NON–REVERSING AUTO–TRANSFORMER TYPE
- PW = PART WINDING
- LC = LIGHTING CONTACTOR
- AUXILIARY CONTACTS 1a = ONE NORMALLY OPEN, 1b = ONE NORMALLY CLOSED
- NUMERAL INDICATES NEMA SIZE

- 5 — SQUIRREL CAGE INDUCTION MOTOR. NUMERAL DENOTES HORSEPOWER.
- G — GENERATOR
- A — A = AMMETER; V = VOLTMETER; W = WATTMETER; WH = WATTHOUR METER; D = DEMAND METER; EX = EXCITER; FM = FREQUENCY METER; RT = RUNNING TIME METER; TA = TACHOMETER; TG = TACHOMETER GENERATOR; PF = POWER FACTOR METER; VAR = VARMETER; KWH = KILOWATTHOUR METER
- CLF — FUSE–CLF DENOTES CURRENT LIMITING TYPE
- R — INDICATING LIGHTS: R=RED, B=BLUE, G=GREEN, A=AMBER
- E — ELECTRICALLY INTERLOCKED
- K — MECHANICALLY INTERLOCKED
- K — KEY INTERLOCK
- EI — ELECTRICAL INTERLOCK
- NORMALLY OPEN CONTACT (DEENERGIZED POSITION)
- NORMALLY CLOSED CONTACT (DEENERGIZED POSITION)
- VS — VOLTMETER SELECTOR SWITCH
- AS — AMMETER SELECTOR SWITCH
- CS — CIRCUIT BREAKER CONTROL SWITCH
- CTB — CURRENT TEST BLOCK
- PTB — POTENTIAL TEST BLOCK
- TS — TEST SWITCH
- 52 — HIGH VOLTAGE VACUUM CIRCUIT BREAKER, DRAWOUT TYPE, ELECTRICALLY OPERATED, STORED–ENERGY TYPE, D.C. CLOSE AND TRIP.
- LIVE FEEDER INDICATOR, NEON TUBES, 2 PER PHASE
- Y — PHASING RECEPTACLE
- MPR — MICROPROCESSOR–BASED PROTECTION RELAY
- MPM — MICROPROCESSOR–BASED POWER MONITOR & DISPLAY
- MSR — MICROPROCESSOR–BASED STATUS RELAY
- MPD — MICROPROCESSOR–BASED POWER DISPLAY
- MPA — MICROPROCESSOR–BASED POWER MONITOR & ANALYZER (GE MULTILIN PQM OR EQUAL)
- MPC — MICROPROCESSOR–BASED POWER MONITOR & CONTROL
- MTU — MICROPROCESSOR–BASED TRIP UNIT (PROTECTION, MONITORING & COMMUNICATION)
- EQUIPMENT ENCLOSURE AND/OR CONTROLLER
- EQUIPMENT TO BE DEMOLISHED
- SPACE HEATER

SYMBOLS FOR ELEMENTARY DIAGRAMS

- STATUS INDICATION
- FIELD MOUNTED
- FRONT PANEL MOUNTED
- COMPUTER CONTROL SYSTEM CONFIGURABLE FUNCTION (DISPLAYED ON CRT)
- REAR PANEL MOUNTED
- COMPUTER CONTROL SYSTEM CONFIGURABLE FUNCTION (NOT DISPLAYED ON CRT)
- ⊖ — 120 VAC POWER SUPPLY
- OL'S — 3 OVERLOADS
- ETM — ELAPSED TIME METER

COPYRIGHT: ARCADIS U.S., INC. 2016

IF THIS BAR IS NOT 1" INDICATED SCALE IS INCORRECT

NO.	DATE	ISSUED FOR	BY
0	JUL 2019	BIDDING	HG

SEALS

GEORGIA REGISTERED No. 013444 PROFESSIONAL ENGINEER IVANM. GONZALEZ July 31, 2019

ARCADIS A Joint Venture
BPA
2839 Paces Ferry Road
Suite 900
Atlanta, GA 30339
Tel: 770–431–8666
Fax: 770–435–2666
www.arcadis–us.com

ATLANTA, GEORGIA
CITY OF ATLANTA
DEPARTMENT OF WATERSHED MANAGEMENT

EAST AREA WATER QUALITY CONTROL FACILITY IMPROVEMENTS

W.01.02.0085

SHEET TITLE

SYMBOLS, LEGEND, AND GENERAL NOTES (1 OF 2)

DATE:	JULY 2019
PROJECT NO.:	GABPA134
DESIGNED BY:	S. PATEL
DRAWN BY:	C. MARTINI
CHECKED BY:	I. GONZALEZ

SCALE: NONE

E–001

SHEET 81 OF 150

User:TTHOMAS Spec:AUS–NCSM00 File:I:\ACAD\PROJ\GABPA134 – CSO GROUP 1\BID PACKAGE 2\SHEETS\ELECTRICAL\E–001.DWG Scale:1:1 SavedDate:3/18/2019 Time:17:03 Plot Date: Thomas, Travis; 7/31/2019, 10:26 : Layout:81

COMMONLY USED SUFFIX LETTERS APPLIED TO RELAY FUNCTION NUMBERS

SUFFIX LETTER	RELAY APPLICATION
A	ALARM ONLY
B	BUS PROTECTION
G GS	GROUND–FAULT PROTECTION (RELAY CT IN A SYSTEM NEUTRAL CIRCUIT) OR GENERATOR PROTECTION
L	LINE PROTECTION
M	MOTOR PROTECTION
N	GROUND FAULT PROTECTION (RELAY COIL CONNECTED IN RESIDUAL CT CIRCUIT)
T	TRANSFORMER PROTECTION
V	VOLTAGE

EXAMPLES:
(1) 87T – TRANSFORMER DIFFERENTIAL RELAY
(2) 51G – TIME–OVERCURRENT RELAY USED FOR GROUND FAULT PROTECTION
(3) 49M – MOTOR WINDING OVERLOAD (OR OVER TEMPERATURE) RELAY

ABBREVIATIONS

A	AMBER LIGHT (BKR. TRIPPED)
AA	AUTOMATIC ALTERNATOR
AF	AMP FRAME
AM	AMMETER
ASC	AUTOMATIC SEQUENCING CONTACT
AT	AMP TRIP
ATS	AUTOMATIC TRANSFER SWITCH
AUMS	SYS. AUTO–MAIN SWITCH
BFP	BELT FILTER PRESS
BTD	BEARING TEMPERATURE DETECTOR
BTS	BEARING TEMPERATURE SWITCH
CJB	CONTROL JUNCTION BOX
CV	CONE VALVE
DCU	DISTRIBUTED CONTROL UNIT
DCS	DIGITAL CONTROL SYSTEM
ECS	ENG. CONTROL SWITCH
EDH	ELECTRIC DUCT HEATER
EMS	ELECTRICAL MONITORING SYSTEM
EOV	ELECTRICALLY OPERATED VALVE
EP	ELECTRIC PNEUMATIC
ESPB	EMERGENCY STOP PUSH BUTTON
ET	VOLTAGE TRANSDUCER
EUH	ELECTRIC UNIT HEATER
FC	FLOW CONTROLLER
FE	FLOW ELEMENT
FIT	FLOW INDICATING TRANSMITTER
FL	FAILURE RELAY/CONTACTOR
FM1	FREQUENCY METER–INCOMING
FM2	FREQUENCY METER–RUNNING
FOH	FAN–OFF–HEATER SELECTOR SWITCH
FQIT	FLOW QUANTITY INDICATING TRANSMITTER
FS	FLOAT SWITCH
FSR	FORWARD–STOP–REVERSE PUSHBUTTON, MOMENTARY–CONTACT TYPE
FSRL	FORWARD–STOP–REVERSE PUSHBUTTON, MOMENTARY–CONTACT TYPE WITH LOCKOUT LATCH
FT	FREQUENCY TRANSDUCER
G	GREEN LIGHT (BREAKER OPEN)
GCS	GENERATOR MONITORING & CONTROL SYSTEM
GFP	GROUND FAULT PROTECTION
GFI	GROUND FAULT INTERRUPTER
H	HORN
H/TJB	HEAT TRACING JUNCTION BOX
HA	HAND–AUTOMATIC SELECTOR SWITCH
HLOT	HIGH LUBE OIL TEMPERATURE SWITCH
HOA	HAND–OFF–AUTOMATIC SELECTOR SWITCH
HOS	HAND–OFF–STANDBY SELECTOR SWITCH
HS	HORN SILENCE PUSH BUTTON
HSDB	SLUDGE DEWATERING BUILDING LOW VOLTAGE PANEL
HSPB	SLUDGE PUMP BUILDING HIGH VOLTAGE PANEL
HT	HEAT TRACING
HWT	HIGH WATER TEMPERATURE SWITCH
IL	INDICATING LIGHT
IT	CURRENT TRANSDUCER
JOC	JOG–OPEN–CLOSE PUSHBUTTON, MOMENTARY–CONTACT TYPE
JT	WATT TRANSDUCER
KS	KEY SWITCH
LC	LEVEL CONTROLLER
LCI	LOAD COMMUTATED INVERTER
LCP	LOCAL CONTROL PANEL
LDSS	LEAD UNIT SELECTOR SWITCH
LE	LEVEL ELEMENT
LI	LEVEL INDICATOR
LIT	LEVEL INDICATING TRANSMITTER
LLOP	LOW LUBE OIL PRESSURE SWITCH
LOR	LOCAL–OFF–REMOTE SELECTOR SWITCH
LR	LOCAL–REMOTE SELECTOR SWITCH
LS	LIMIT SWITCH
LSDB	SLUDGE DEWATERING BUILDING LOW VOLTAGE PANEL
LSPB	SLUDGE PUMP BUILDING LOW VOLTAGE PANEL
LTS	LIGHT TEST PUSH BUTTON
MCB	MAIN CIRCUIT BREAKER
MCC	MOTOR CONTROL CENTER
MHC	MECHANICALLY HELD LIGHTING CONTACTOR
MHP	DENOTES MEDIUM VOLTAGE POWER

CONT.–ABBREVIATIONS

MLO	MAIN LUGS ONLY
MOV	MOTOR OPERATED VALVE
MS	MASTER CONTROL SWITCH
MSH	MOISTURE SWITCH HIGH
MSC	MANUFACTURER SUPPLIED CABLE
MSD	MOISTURE SENSING DETECTION PANEL
MSH	MOTOR SPACE HEATER
MTP	MOTOR THERMAL PROTECTOR (BUILT–IN)
N.C.	NORMALLY CLOSED
NIC	NOT IN CONTRACT
N.O.	NORMALLY OPENED
OC	OPEN–CLOSE SWITCH
OL	OVERLOAD RELAY/CONTACTOR
OSC	OPEN–STOP–CLOSE PUSHBUTTON
PE	PNEUMATIC ELECTRIC
PFCC	POWER FACTOR CORRECTION CAPACITOR (HARMONIC FILTER)
PFT	POWER FACTOR TRANSDUCER
PHL	PHOTOELECTRIC SWITCH
PJB	POWER JUNCTION BOX
PLC	PROGRAMMABLE LOGIC CONTROLLER
PS	PRESSURE SWITCH
RC	RATE CONTROLLER
RESET	RESET BUTTON
RO	RUN–OFF SWITCH
RSFS	REMOTE–SLOW–FAST–STOP SELECTOR SWITCH
RTD	RESISTANCE TEMPERATURE DETECTORS
RTM	RUNNING TIME METER
SC	SPEED CONTROLLER
SCR	SILICON CONTROLLED RECTIFIER DRIVE
SCV	SURGE CONTROL VALVE
SEL	SELECTOR SWITCH
SF	SLOW–FAST PUSHBUTTON, MOMENTARY–CONTACT TYPE
SFS	SLOW–FAST–STOP PUSHBUTTON, MOMENTARY–CONTACT TYPE
SI	SPEED INDICATOR
SL	SYNCHRONIZING LIGHT
SLR	SLIP LOSS RECOVERY VARIABLE SPEED DRIVE CONTROLLER
SO	SAFE–OFF SWITCH
SOL	SAFE–OFF SWITCH, WITH LOCKOUT LATCH
SPF	SHEAR PIN FAILURE CONTACT
SQ	SEQUENCE SELECTOR SWITCH
SRC	SECONDARY RESISTOR CONTROLLER
SS	SYNCHROSCOPE
SSI	START–STOP PUSHBUTTON, MOMENTARY–CONTACT TYPE WITH RED (RUN) AND GREEN (OFF) INDICATING LIGHTS
SSL	START–STOP PUSHBUTTON, MOMENTARY–CONTACT TYPE WITH LOCKOUT LATCH
SSM	START–STOP PUSHBUTTON, MAINTAINED–CONTACT TYPE
ST1	SERVICE TRANSFORMER NO.1
SV	SOLENOID VALVE
SWSV	SEAL WATER SOLENOID VALVE
T	THERMOSTAT
T/C	THERMOCOUPLE
TG	TACHOMETER GENERATOR
TI	TIMER
TIT	TEMPERATURE INDICATING TRANSMITTER
TJB	TERMINAL JUNCTION BOX
TMS	TRANSFER MODE SELECTOR SWITCH
TQ	TORQUE ALARM SWITCH
TS	TEMPERATURE SWITCH
TSH	TEST SWITCH HIGH
TSP	TWISTED SHIELDED PAIR
TT	TEMPERATURE TRANSDUCER
TVSS	TRANSIENT VOLTAGE SURPRESSION SYSTEM
VFD	VARIABLE FREQUENCY DRIVE
VMI	VOLT METER–INCOMING
VMR	VOLT METER–RUNNING
WP	WEATHER–PROOF
ZS	POSITION SWITCH

SPECIFICATIONS

1. WORK THESE DRAWINGS WITH APPLICABLE PROJECT SPECIFICATIONS.
2. CABLE NUMBERING SCHEME

FIRST DIGIT=CABLE TYPE

H= POWER CABLES > 600V.
P= POWER CABLES 120V. TO <= 600V.
C= CONTROL CABLES.
I= INSTRUMENTATION CABLES–LOW VOLTAGE DC.
S= SPECIAL COMMUNICATION CABLES
X= SPARE CABLES

SECOND DIGIT=PROCESS AREA

2= AREA 83 SLUDGE DEWATERING
3= AREA 93 PUMP STATION
4= AREA 94 CHEMICAL FEED BUILDING & AREA
5= AREA 95 NEW VORTEX SEPARATOR
6= AREA 96 SLUDGE PUMPING BUILDING & AREA
7= AREA 97 FILTER BUILDING
8= AREA 98 CHEMICAL FEED INSIDE FILTER BUILDING

REMAINING DIGITS REPRESENT UNIQUE SEQUENTIAL CABLE NUMBER.

GENERAL NOTES:

1. ALL INSTALLATIONS SHALL MEET THE CITY OF ATLANTA, THE FULTON COUNTY AND THE STATE OF GEORGIA GUIDELINES AND REGULATIONS.
2. ALL ELECTRICAL WORK SHALL BE DONE IN STRICT ACCORDANCE WITH THE LATEST EDITION OF THE NATIONAL ELECTRICAL CODE, NATIONAL ELECTRICAL SAFETY CODE (NESC) AND NFPA–820 – STANDARD FOR FIRE PROTECTION IN WASTEWATER TREATMENT AND COLLECTION FACILITIES.
3. ALL METALLIC CONDUITS, ELECTRICAL EQUIPMENT, STEEL STRUCTURES, PIPING, MOTOR FRAMES ETC. SHALL BE CONNECTED TO THE GROUNDING SYSTEM PER ARTICLE 250 OF THE NATIONAL ELECTRICAL CODE. UTILIZE UL LISTED BONDING METHODS.
4. ALL EQUIPMENT LOCATION SHALL BE COORDINATED IN FIELD WITH OTHER TRADES. CONDUIT ROUTING AND EQUIPMENT LOCATIONS SHOWN ARE DIAGRAMMATIC ONLY. THE EXACT LOCATION OF ALL EQUIPMENT AND ROUTING OF CABLES AND CONDUITS SHALL BE COORDINATED WITH AND APPROVED BY THE OWNER'S REPRESENTATIVE DURING CONSTRUCTION.
5. DRAWINGS ARE PREPARED BASED ON EXISTING DRAWINGS WITHOUT A FIELD SURVEY. ACTUAL FIELD CONDITIONS MAY BE DIFFERENT THAT WHAT IS SHOWN ON THE DRAWINGS. CONTRACTOR SHALL FIELD VERIFY EXISTING CONDITIONS AND PROVIDE ADDITIONAL CONDUITS, PULL BOXES, SWITCHES, CIRCUIT BREAKERS ETC. AS REQUIRED.
6. THE CONTRACTOR SHALL COORDINATE WITH THE CITY AND ENGINEER, AND SUBMIT A SEQUENCE OF CONSTRUCTION TO MEET THE ABOVE REQUIREMENT. THE COUNTY AND ENGINEER RESERVE THE RIGHT TO APPROVE, DISAPPROVE OR REVISE AS DEEMED NECESSARY.
7. ALL CONDUCTORS, CABLES, ETC. ASSOCIATED WITH THE REPLACEMENT MCCS SHALL BE REMOVED FROM CONDUITS AS PER THE APPROVED SEQUENCE OF CONSTRUCTION. CONDUITS MAY BE CLEANED AND REUSED IF THEY ARE NOT DAMAGED AND THEY DO NOT SHOW ANY SIGN OF DETERIORATION.
8. NEW WIRING USING EXISTING CONDUITS, TERMINAL AND PULL BOXES SHALL BE PROVIDED UP TO THE MAXIMUM POSSIBLE EXTENT TO MAINTAIN STRUCTURAL INTEGRITY OF THE EXISTING INFRASTRUCTURE. PROVIDE NEW CONDUITS, TERMINAL AND PULL BOXES AS REQUIRED. ALL WIRING SHALL BE NEW AND RUN UNSPLICED BETWEEN TWO TERMINATION POINTS. NO EXCEPTIONS. ALL UNUSED EXISTING CONDUITS SHALL BE CAPPED AT BOTH ENDS AND ABANDONED IN–PLACE.
9. POWER WIRING SHALL NOT BE COMBINED UNLESS NOTED OTHERWISE ON THE DRAWINGS. IF COMBINED, CONDUCTOR AMPACITY DERATING SHALL BE APPLIED AS PER THE NEC.
10. CONTROL WIRING (14 AWG CONDUCTORS) MAY BE COMBINED INTO A COMMON CONTROL CONDUIT AS PERMITTED BY THE NEC TO MINIMIZE THE NUMBER OF CONDUIT RUNS TO THE CONTROL PANEL AND TO MAINTAIN STRUCTURAL INTEGRITY OF THE EXISTING INFRASTRUCTURE.
11. SIGNAL WIRING (TWISTED SHIELDED PAIR CABLES) MAY BE COMBINED INTO A COMMON SIGNAL CONDUIT AS PERMITTED BY THE NEC TO MINIMIZE THE NUMBER OF CONDUIT RUNS TO THE CONTROL PANEL AND TO MAINTAIN STRUCTURAL INTEGRITY OF THE EXISTING INFRASTRUCTURE.
12. ALL DEMOLITION WORK SHALL BE DONE IN ACCORDANCE WITH THE 2017 EDITION OF THE NATIONAL ELECTRICAL CODE.
13. EXISTING CSO FACILITY SHALL REMAIN OPERATIONAL DURING DEMOLITION. THE CONTRACTOR SHALL PROVIDE TEMPORARY POWER, CONTROL AND ANY ANCILLIARY EQUIPMENT AND LABOR AS REQUIRED.
14. THE CONTRACTOR SHALL COMPLETE ALL DEMOLITION WORK WITH MINIMUM PRE–APPROVED DOWNTIME. THE CONTRACTOR SHALL SUBMIT DOWNTIME APPROVAL REQUEST IN WRITING. THE CITY AND ENGINEER RESERVE THE RIGHT TO APPROVE, DISAPPROVE OR REVISE AS DEEMED NECESSARY.
15. REFER TO ALL CONTRACT DOCUMENTS INCLUDING CIVIL, MECHANICAL AND INSTRUMENTATION AND CONTROL DRAWINGS AND SPECIFICATIONS FOR ADDITIONAL DEMOLITION REQUIRED. THE CONTRACTOR SHALL PROVIDE ANY ANCILLIARY EQUIPMENT, LABOR AND MATERIAL NECESSARY TO COMPLETE THE WORK.
16. REMOVE ALL EXISTING WIRING BACK TO THEIR SOURCE OR ORIGIN. ABANDON ALL UNUSED EXISTING CONDUITS IN–PLACE AND CAP.
17. THE CONTRACTOR SHALL NOT DISCARD ANY EQUIPMENT WITHOUT COORDINATION WITH THE CITY.
18. ALL CONDUCTORS, CABLES, STC. SHALL BE REMOVED FROM ALL UNUSED CONDUITS.

HAZARDOUS AREA CLASSIFICATION

INSTALLATION SHALL MEET NFPA 820 AND NEC ART 500. EXTENT OF HARZARDOUS AREAS IS BASED ON THESE STANDARDS. HAZARD IS FROM METHANE AND GASOLINE (CLASS 1 GROUP D MATERIALS PER NEC). NOTE THAT THIS TABLE IS FOR HAZARDOUS AREAS ONLY, FOR CORROSIVE AREAS SEE PROJECT SPEC. 16010.

AREA	CLASSIFICATION	COMMENT
BYPASS TO WRC HEADWORKS, PUMP STATION,	A) CLASS I, DIV. 1: BELOW GRADE PUMP WELL B) CLASS I, DIV. 2: SPACE 18 INCHES HIGH ABOVE HATCH AND 3 FEET BEYOND HATCH OR ENCLOSED SPACE C) CLASS I, DIV. 2: SPHERE OF 3–FOOT RADIUS AROUND VENT	
HEADBOX, NEW VORTEX SEPARATOR	A) CLASS I, DIV. 1: SPACES BENEATH CHANNEL COVERS B) CLASS I, DIV. 2: ALL EXTERIOR SPACES ABOVE STRUCTURE, 18 INCHES HIGH C) CLASS I, DIV. 2: 10 FOOT SPACE, 18 INCHES HIGH BEYOND STRUCTURE PERIMETER	
GRIT SETTLING BASIN, SEDIMENTATION BASIN	A) CLASS 1, DIV 1: SPACES BENEATH BASIN COVERS B) CLASS 1, DIV 2: SPACE 10 FEET WIDE AND 18 INCHES HIGH ABOVE GRADE AROUND BASIN PERIMETER C) CLASS 1, DIV. 2: SPACE 18 INCHES BEYOND BASIN COVER AND STRUCTURE SURFACE	
GRIT PUMPS PITS, DETRITUS TANKS, OTHER PUMP PITS & WELLS	A) CLASS 1, DIV.1: BELOW GRADE SPACES B) CLASS 1, DIV.2: SPACE 18 INCHES HIGH ABOVE TOP OF PIT AND SPACE 10 FEET WIDE AND 18 INCHES HIGH BEYOND PIT PERIMETER	
SLUDGE PUMP STATION	A) CLASS 1, DIV. 1: SLUDGE PIT INTERIOR SPACE B) CLASS 1, DIV. 2: SPACE 18 INCHES HIGH ABOVE SLUDGE PIT HATCH AND SPACE 10 FEET WIDE AND 18 INCHES HIGH BEYOND HATCH PERIMETER C) NON–HAZARDOUS: PUMP ROOM SPACE	
SLUDGE HOLDING TANKS AND PUMP ROOM	A) CLASS I, DIV. 1: TANK INTERIOR SPACES B) CLASS I, DIV. 2: NORTH AND SOUTH PIPING GALLERIES AND STAIRWELLS C) CLASS 1, DIV. 2: SPACE 10 FEET WIDE AND 18 INCHES HIGH ABOVE GRADE AROUND TANK PERIMETER D) CLASS I, DIV. 2: SPACE 18 INCHES BEYOND TANK STRUCTURE SURFACE E) NON–HAZARDOUS: UPPER AND LOWER LEVELS OF PUMP ROOM (HEADHOUSE)	
FILTER BUILDING	NON–HAZARDOUS, CORROSIVE	
BELOW GROUND SUMP PUMP PITS, VALVE VAULTS & SPACES	CLASS I, DIV. 2: BELOW GRADE AND SPACE 10 FEET WIDE BEYOND ENCLOSED SPACE AND 18 INCHES ABOVE	
SOLIDS PROCESSING BUILDING	NON–HAZARDOUS, CORROSIVE	
SLUDGE DEWATERING BUILDING	NON–HAZARDOUS, CORROSIVE	

COPYRIGHT:
ARCADIS U.S., INC.
2016

IF THIS BAR IS NOT 1" INDICATED SCALE IS INCORRECT

NO.	DATE	ISSUED FOR	BY
0	JUL 2019	BIDDING	HG

SEALS

GEORGIA REGISTERED No. 013444 PROFESSIONAL ENGINEER IVAN M. GONZALEZ July 31, 2019

ARCADIS
BPA
A Joint Venture
2839 Paces Ferry Road
Suite 900
Atlanta, GA 30339
Tel: 770–431–8666
Fax: 770–435–2666
www.arcadis–us.com

ATLANTA, GEORGIA
CITY OF ATLANTA
DEPARTMENT OF WATERSHED MANAGEMENT

EAST AREA WATER QUALITY CONTROL FACILITY IMPROVEMENTS

W.01.02.0085

SHEET TITLE

SYMBOLS, LEGEND, AND GENERAL NOTES (2 OF 2)

DATE:	JULY 2019
PROJECT NO.:	GABPA134
DESIGNED BY:	S. PATEL
DRAWN BY:	C. MARTINI
CHECKED BY:	I. GONZALEZ

SCALE: NONE

E–002

SHEET 82 OF 150

User:TTHOMAS Spec: AUS–NCSMOD File:I:\ACAD\PROJ\GABPA134 – CSO GROUP 1\BID PACKAGE 2\SHEETS\ELECTRICAL\E–002.DWG Scale:1:1 SavedDate:2/20/2019 Time:18:22 Plot Date: Thomas, Travis; 7/31/2019; 10:27 ; Layout:82

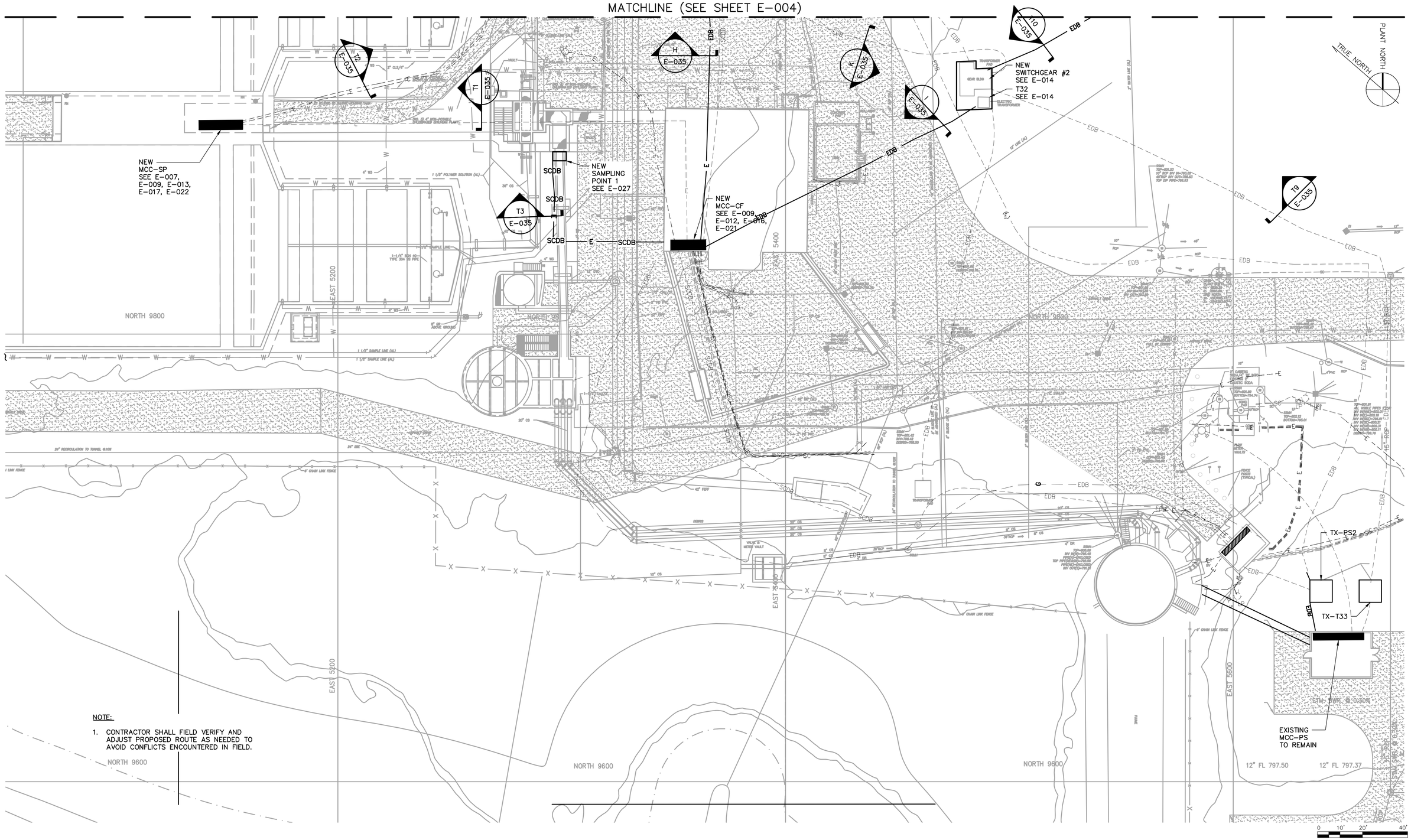

NOTE:

1. CONTRACTOR SHALL FIELD VERIFY AND ADJUST PROPOSED ROUTE AS NEEDED TO AVOID CONFLICTS ENCOUNTERED IN FIELD.

COPYRIGHT: ARCADIS U.S., INC. 2016

IF THIS BAR IS NOT 1" INDICATED SCALE IS INCORRECT

NO.	DATE	ISSUED FOR	BY
0	JUL 2019	BIDDING	HG

SEALS

GEORGIA REGISTERED No. 013444 PROFESSIONAL ENGINEER IVAN M. GONZALEZ July 31, 2019

ARCADIS BPA A Joint Venture
2839 Paces Ferry Road
Suite 900
Atlanta, GA 30339
Tel: 770-431-8666
Fax: 770-435-2666
www.arcadis-us.com

RESURGENS 1847 1865 ATLANTA, GA

ATLANTA, GEORGIA
CITY OF ATLANTA
DEPARTMENT OF WATERSHED MANAGEMENT

EAST AREA WATER QUALITY CONTROL FACILITY IMPROVEMENTS

W.01.02.0085

SHEET TITLE

ELECTRICAL SITE PLAN (1 OF 3)

DATE:	JULY 2019
PROJECT NO.:	GABPA134
DESIGNED BY:	S. PATEL
DRAWN BY:	C. MARTINI
CHECKED BY:	I. GONZALEZ

SCALE: 1" = 20'

E-003

SHEET 83 OF 150

User: TTHOMAS Spec: AUS-NCSMOD File: I:\ACAD\PROJ\GABPA134 - CSO GROUP 1\BID PACKAGE 2\SHEETS\ELECTRICAL\E-003.DWG Scale: 1:1 SavedDate: 3/28/2019 Time: 11:09 Plot Date: Thomas, Travis; 7/31/2019; 10:30 ; Layout: 83

MATCHLINE (SEE SHEET E-005)

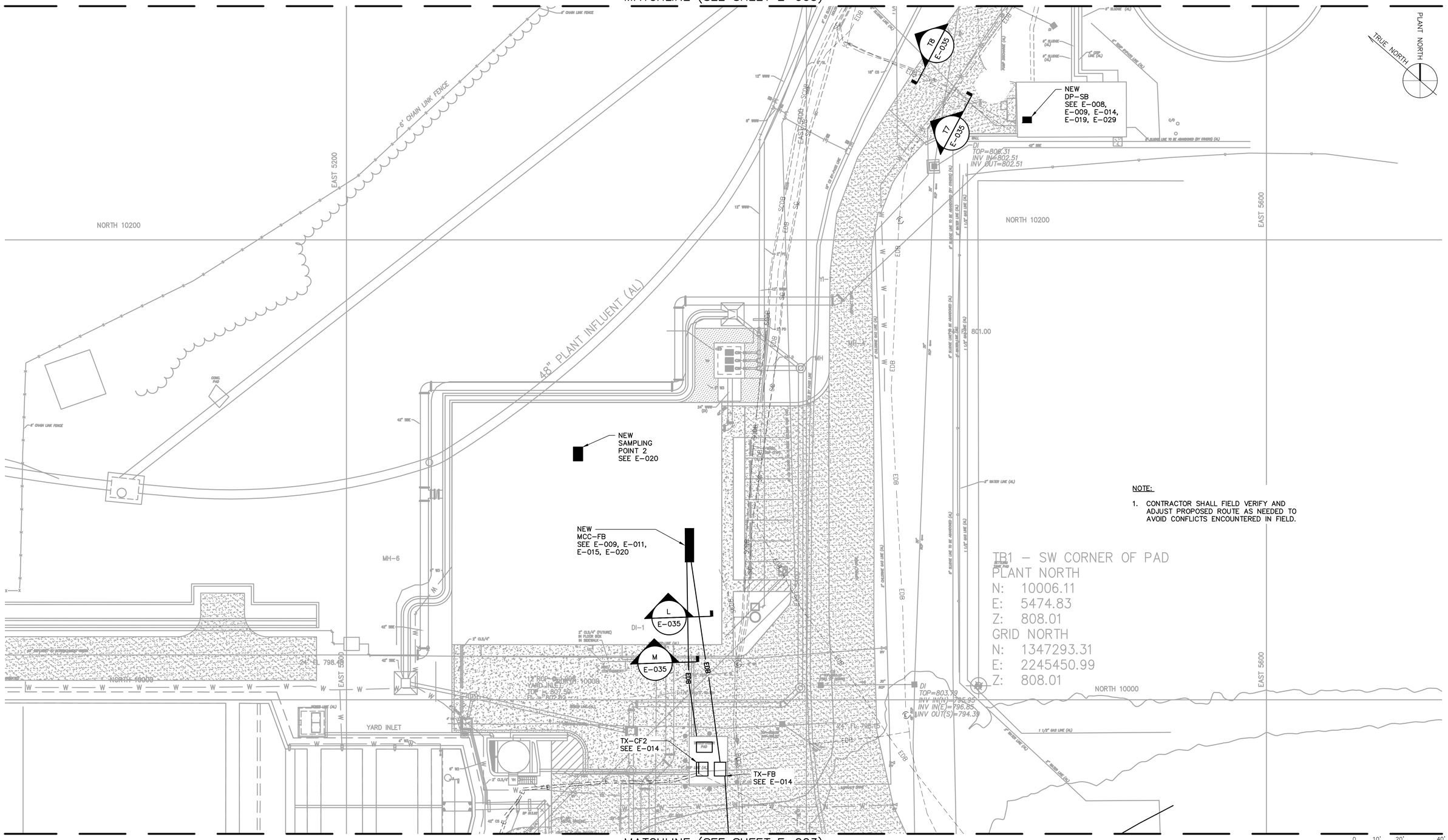

MATCHLINE (SEE SHEET E-003)

COPYRIGHT: ARCADIS U.S., INC. 2016

IF THIS BAR IS NOT 1" INDICATED SCALE IS INCORRECT

NO.	DATE	ISSUED FOR	BY
0	JUL 2019	BIDDING	HG

SEALS

GEORGIA REGISTERED No. 013444 PROFESSIONAL ENGINEER IVANM. GONZALEZ July 31, 2019

ARCADIS A Joint Venture
BPA
2839 Paces Ferry Road
Suite 900
Atlanta, GA 30339
Tel: 770-431-8666
Fax: 770-435-2666
www.arcadis-us.com

ATLANTA, GEORGIA
CITY OF ATLANTA
DEPARTMENT OF WATERSHED MANAGEMENT

EAST AREA WATER QUALITY CONTROL FACILITY IMPROVEMENTS

W.01.02.0085

SHEET TITLE

ELECTRICAL SITE PLAN (2 OF 3)

DATE: JULY 2019
PROJECT NO.: GABPA134
DESIGNED BY: C. ATKINS
DRAWN BY: C. MARTINI
CHECKED BY: I. GONZALEZ

SCALE: 1" = 20'

E-004

SHEET 84 OF 150

User:TTHOMAS Spec:AUS-NCSMOD File:I:\ACAD\PROJ\GABPA134 – CSO GROUP 1\BID PACKAGE 2\SHEETS\ELECTRICAL\E-004.DWG Scale:1:1 SavedDate:3/28/2019 Time:11:11 Plot Date: Thomas, Travis; 7/31/2019, 10:34 : Layout:84

NOTE:

1. CONTRACTOR SHALL FIELD VERIFY AND ADJUST PROPOSED ROUTE AS NEEDED TO AVOID CONFLICTS ENCOUNTERED IN FIELD.
2. FURNISH AND INSTALL NEW FIBER OPTIC CABLE.

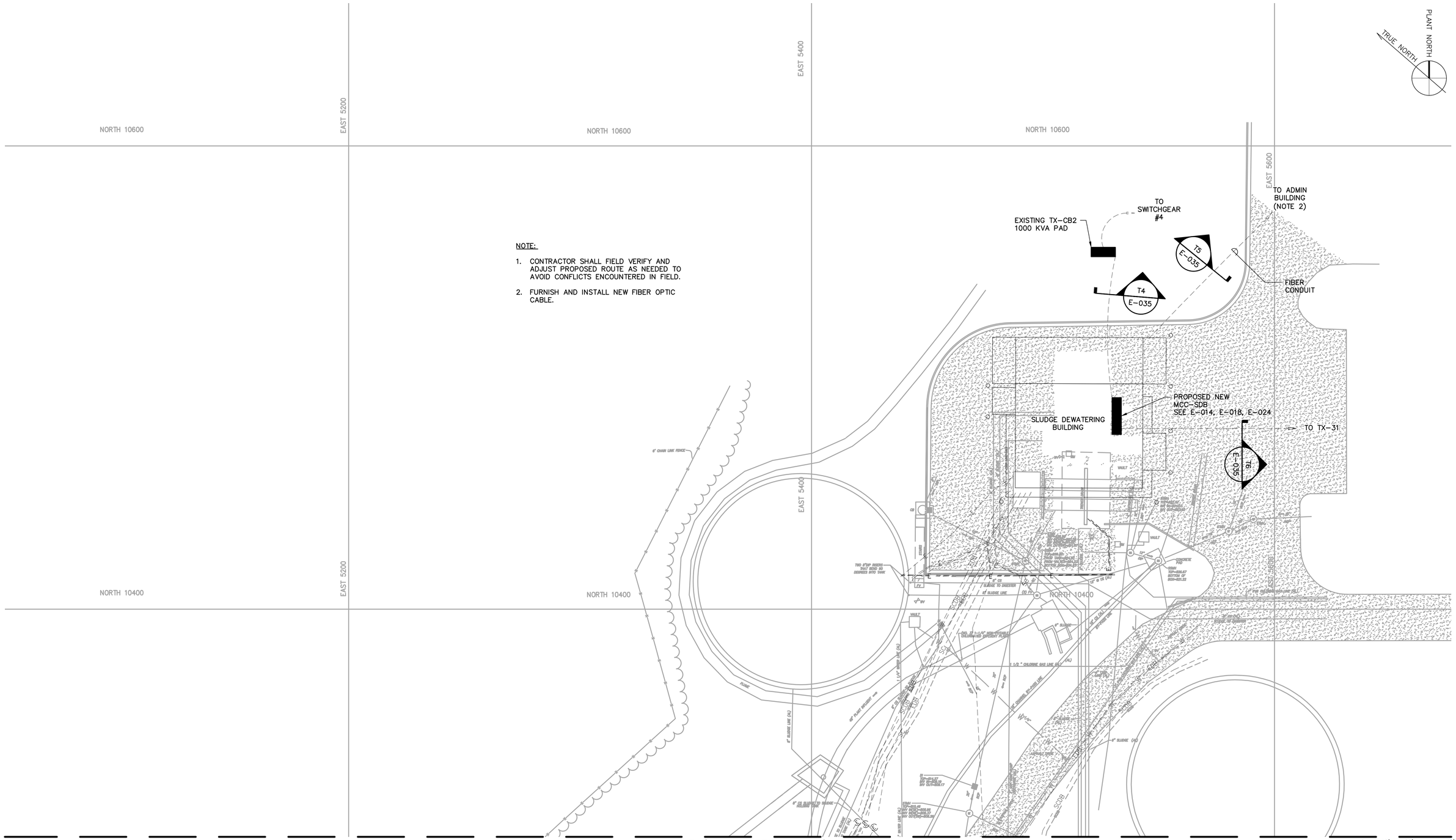

MATCHLINE (SEE SHEET E-004)

User: TTHOMAS Spec: AUS-NCSMOD File: I:\ACAD\PROJ\GABPA134 - CSO GROUP 1\BID PACKAGE 2\SHEETS\ELECTRICAL\E-005.DWG Scale: 1:1 SavedDate: 3/28/2019 Time: 11:12 Plot Date: Thomas, Travis; 7/31/2019; 10:37 ; Layout: 85

COPYRIGHT: ARCADIS U.S., INC. 2016

IF THIS BAR IS NOT 1" INDICATED SCALE IS INCORRECT

NO.	DATE	ISSUED FOR	BY
0	JUL 2019	BIDDING	HG

SEALS

GEORGIA REGISTERED No. 013444 PROFESSIONAL ENGINEER NAN M. GONZALEZ July 31, 2019

ARCADIS A Joint Venture
BPA
2839 Paces Ferry Road
Suite 900
Atlanta, GA 30339
Tel: 770-431-8666
Fax: 770-435-2666
www.arcadis-us.com

RESURGENS ATLANTA, GA 1901 2001

ATLANTA, GEORGIA
CITY OF ATLANTA
DEPARTMENT OF WATERSHED MANAGEMENT

EAST AREA WATER QUALITY CONTROL FACILITY IMPROVEMENTS

W.01.02.0085

SHEET TITLE

ELECTRICAL SITE PLAN (3 OF 3)

DATE:	JULY 2019
PROJECT NO.:	GABPA134
DESIGNED BY:	S. PATEL
DRAWN BY:	C. MARTINI
CHECKED BY:	I. GONZALEZ

SCALE: 1" = 20'

E-005

SHEET 85 OF 150

User:TTHOMAS Spec:AUS-NCSMOD File:I:\ACAD\PROJ\GABPA134 - CSO GROUP 1\BID PACKAGE 2\SHEETS\ELECTRICAL\E-006.DWG Scale:1:1 SavedDate:8/3/2018 Time:15:54 Plot Date: Thomas, Travis; 7/31/2019; 10:40 ; Layout:86

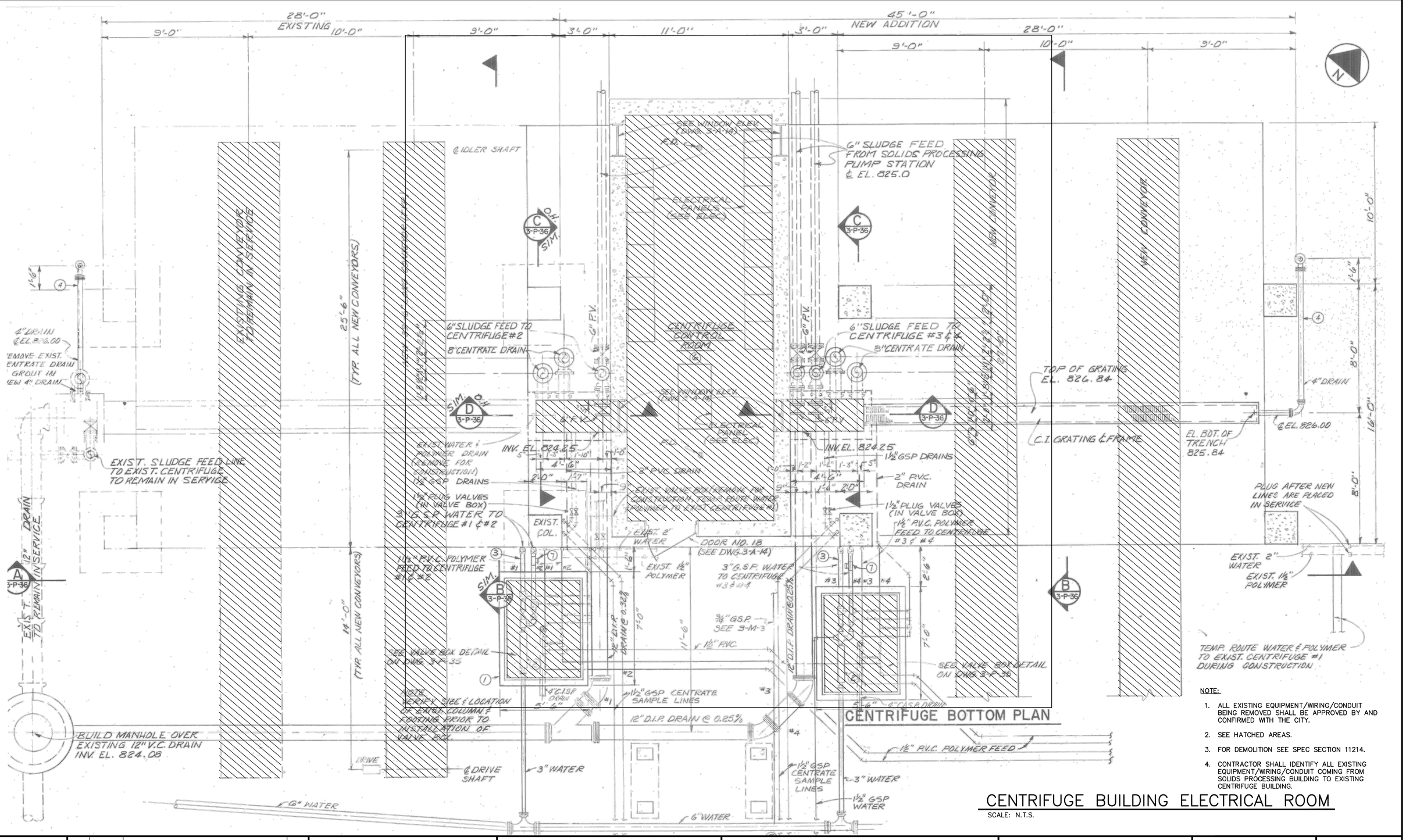

NOTE:

1. ALL EXISTING EQUIPMENT/WIRING/CONDUIT BEING REMOVED SHALL BE APPROVED BY AND CONFIRMED WITH THE CITY.
2. SEE HATCHED AREAS.
3. FOR DEMOLITION SEE SPEC SECTION 11214.
4. CONTRACTOR SHALL IDENTIFY ALL EXISTING EQUIPMENT/WIRING/CONDUIT COMING FROM SOLIDS PROCESSING BUILDING TO EXISTING CENTRIFUGE BUILDING.

CENTRIFUGE BUILDING ELECTRICAL ROOM

SCALE: N.T.S.

COPYRIGHT: ARCADIS U.S., INC. 2016

IF THIS BAR IS NOT 1" INDICATED SCALE IS INCORRECT

NO.	DATE	ISSUED FOR	BY
0	JUL 2019	BIDDING	HG

SEALS

GEORGIA REGISTERED No. 013444 PROFESSIONAL ENGINEER IVAN M. GONZALEZ July 31, 2019

ARCADIS A Joint Venture
BPA
2839 Paces Ferry Road
Suite 900
Atlanta, GA 30339
Tel: 770-431-8666
Fax: 770-435-2666
www.arcadis-us.com

ATLANTA, GEORGIA
CITY OF ATLANTA
DEPARTMENT OF WATERSHED MANAGEMENT

EAST AREA WATER QUALITY CONTROL FACILITY IMPROVEMENTS

W.01.02.0085

SHEET TITLE

ELECTRICAL DEMOLITION PLAN (1 OF 3)

DATE:	JULY 2019
PROJECT NO.:	GABPA134
DESIGNED BY:	S. PATEL
DRAWN BY:	C. MARTINI
CHECKED BY:	I. GONZALEZ

SCALE: NONE

E-006

SHEET 86 OF 150

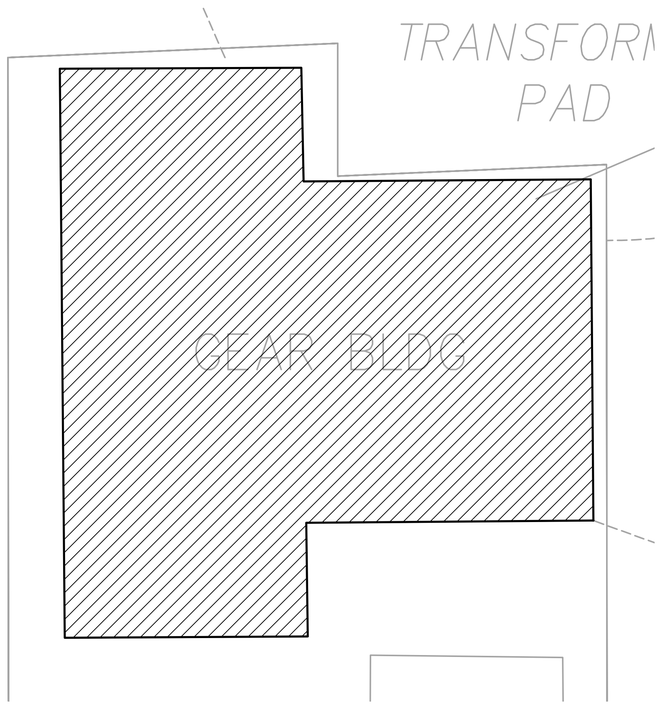

SWITCHGEAR BUILDING

SCALE: 6" = 1'-0"

0 1" 2" 3" 4"

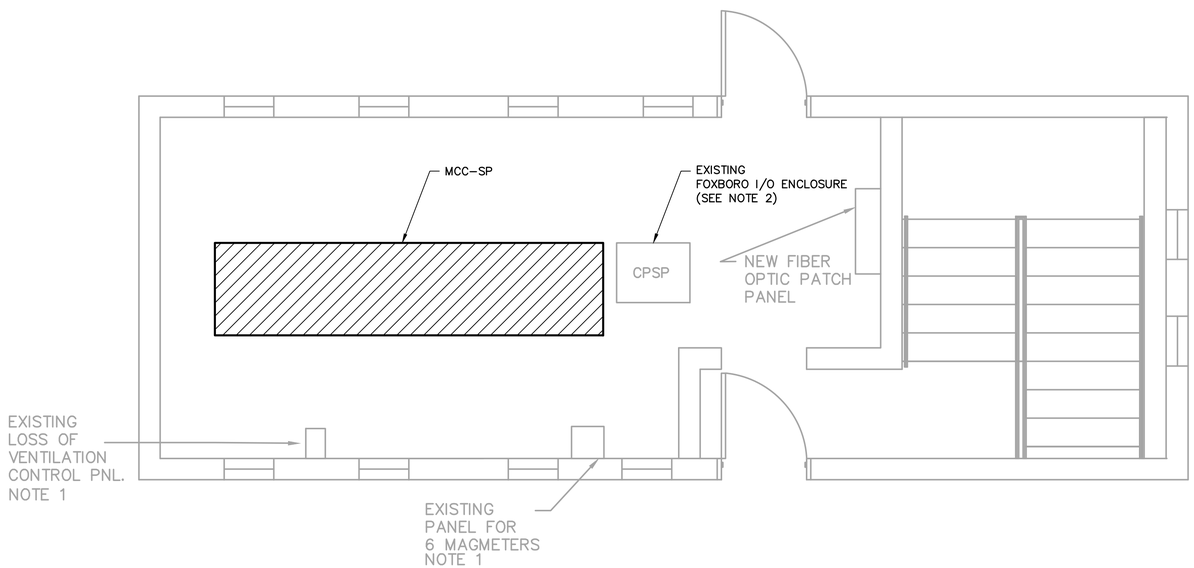

SLUDGE PUMPING STATION ELECTRICAL ROOM

SCALE: 3/8" = 1'-0"

0 2' 4' 6'

NOTE:

1. ALL EXISTING EQUIPMENT/WIRING BEING REMOVED SHALL BE APPROVED BY AND CONFIRMED WITH CITY. REFER TO SPEC SECTION 02050 FOR COORDINATION WITH THE CITY PRIOR TO DEMOLITION OR DISPOSAL OF EXISTING EQUIPMENT.

2. EXISTING FOXBORO CP-SP TO BE REPLACED UNDER DIV. 17 SPECS.

COPYRIGHT:
ARCADIS U.S., INC.
2016

IF THIS BAR IS NOT 1" INDICATED SCALE IS INCORRECT

NO.	DATE	ISSUED FOR	BY
0	JUL 2019	BIDDING	HG

SEALS

GEORGIA REGISTERED No. 013444 PROFESSIONAL ENGINEER IVAN M. GONZALEZ July 31, 2019

ARCADIS
BPA
A Joint Venture
2839 Paces Ferry Road
Suite 900
Atlanta, GA 30339
Tel: 770-431-8666
Fax: 770-435-2666
www.arcadis-us.com

ATLANTA, GEORGIA
CITY OF ATLANTA
DEPARTMENT OF WATERSHED MANAGEMENT

EAST AREA WATER QUALITY CONTROL FACILITY IMPROVEMENTS

W.01.02.0085

SHEET TITLE

ELECTRICAL DEMOLITION PLAN (2 OF 3)

DATE:	JULY 2019
PROJECT NO.:	GABPA134
DESIGNED BY:	S. PATEL
DRAWN BY:	C. MARTINI
CHECKED BY:	I. GONZALEZ

SCALE: NONE

E-007

SHEET 87 OF 150

User: TTHOMAS Spec: AUS-NCSMOD File: I:\ACAD\PROJ\GABPA134 - CSO GROUP 1\BID PACKAGE 2\SHEETS\ELECTRICAL\E-007.DWG Scale:1:1 SavedDate:7/30/2019 Time:12:25 Plot Date: Thomas, Travis; 7/31/2019; 10:41 ; Layout:87

MOTOR CONTROL CENTER MCCSB

480V, 3Φ, 4W, 600A BUS

CKT. NO.	EQUIP. TAG NO.	NAMEPLATE DATA	RATING VOLT	RATING Φ	RATING HP	RATING F.L.A.	STARTER DATA C/B	STARTER DATA DISC.	STARTER DATA FUSE	STARTER DATA TYPE	STARTER DATA NEMA SIZE	CIRCUITING DATA POWER WIRE	CIRCUITING DATA CONTROL WIRE	CIRCUITING DATA CONDUIT	CONTROL VOLTAGE
1	33-2	SOLIDS #1	460	3	10	14	MCP			FVNR	1	3#10+#10	4#12	3/4"	24/0
2	-3	PROCESSING #2													
3	-4	PUMPS #3													
4	-5	" #4													
5	-6	SOLIDS #1			5	7.6				FVR			17#12 TO	1 1/2"	SIG
6	-7	REDUCING #2											REDUCTION		
7	-8	UNITS #3											UNIT CP		
8	-9	" #4													
9	—	PANEL HSB	460	3	150kW	225	30/3			—	—	4#10+#10G		3/4"C	
10		SPACE													
11		SPACE													

(2)

PANEL HSB

VOLTS 277/480 — BUS SIZE 100A — PANEL TYPE NHB
PHASE 3Φ — MAIN M.L.O. — M'TING SURFACE
WIRE 4W — A.I.C. 14,000 — BREAKER TYPE BOLT ON

CKT.	LOAD	KW	F.L.A.	WIRE SIZE	C/B	
1	LIGHTING	1.77		2#12	20A/1P	(6) 2x13W-HPS
2	EUH #10	7.50		3#12 #12G	20A/3P	
3	EUH #11	7.50				
4	PANEL LSB	1.2		3#12 #12G	20A/3P	
5	2 TON MONET	3.0		3#12 #12G	20A/3P	1 HP
6	VLV 31-3	—		3#12 #12G	20A/3P	1 HP
7	VLV 33-19	—				
8	VLV 33-20	—				
9	VLV 33-1	—				
10	VLV 32-22	—				
11	SPACE				3-POLE	
12						

(4)

PANEL LSB

VOLTS 277/480 — BUS SIZE 100A — PANEL TYPE NLAB
PHASE 3Φ — MAIN 50A/3P — M'TING SURFACE
WIRE 4W — A.I.C. 7,000 — BREAKER TYPE BOLT ON

CKT.	LOAD	KW	F.L.A.	WIRE SIZE	C/B	
1	RECEPTACLES	.9	4.5	2#12 #12G	20A/1P	(5) Φ
2	EMERGENCY LTG.	.6	2.4	2#12		
3	EXH. FANS #5	.6	4.6	2#12		0.5 HP
4	VSD	1.0		2#12 #12G		
5	SPARE					
6	"					
7	SPACE				1 POLE	
8						
9						
10						
11						
12						

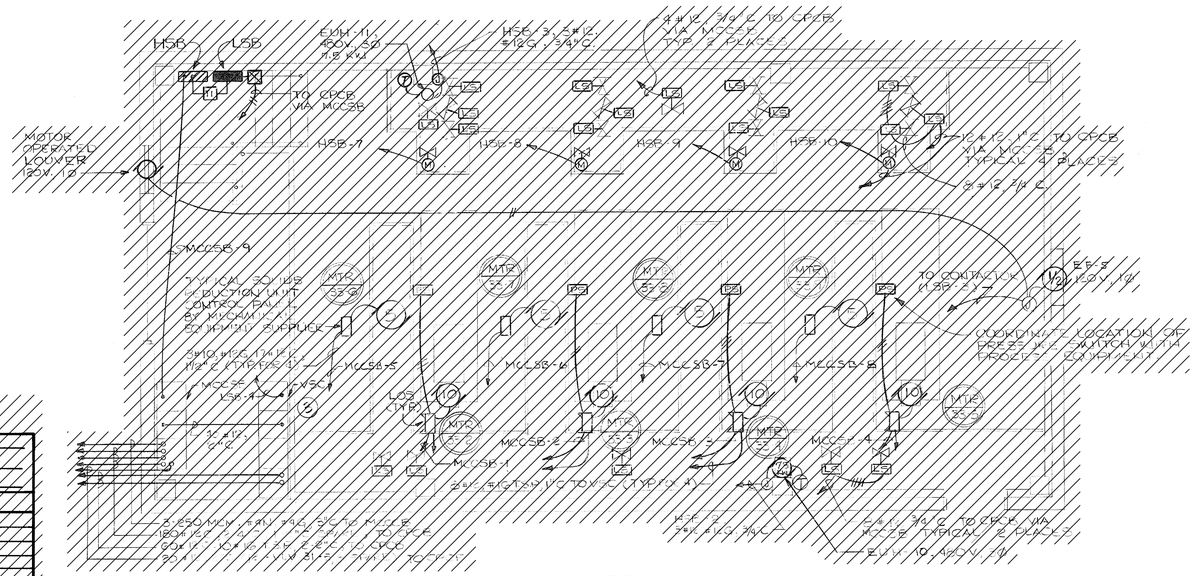

POWER

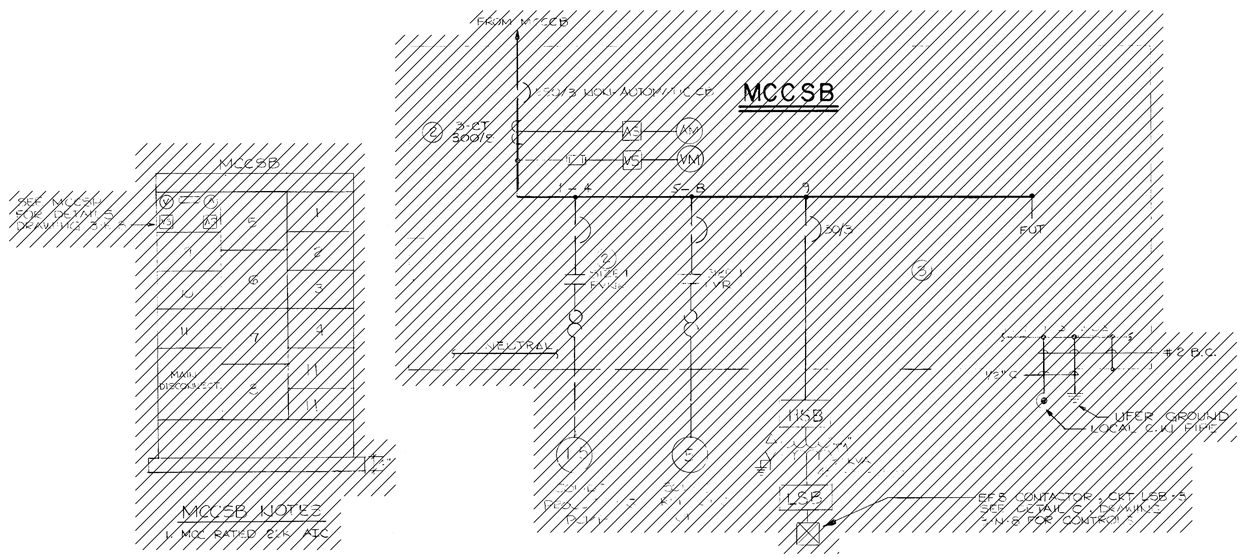

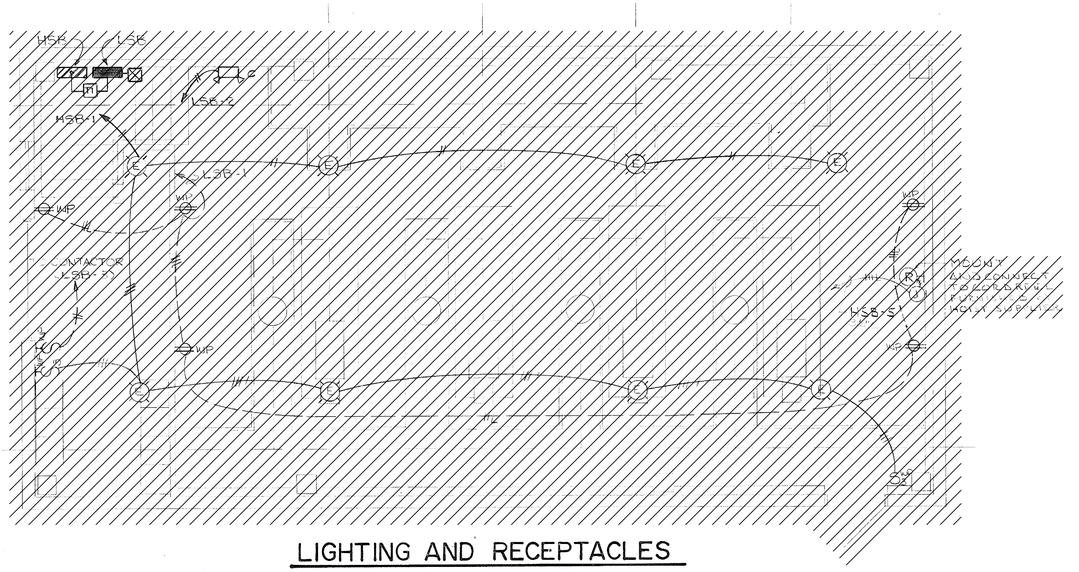

LIGHTING AND RECEPTACLES

SOLIDS PROCESSING BUILDING

SCALE: 1/4" = 1'-0"

COPYRIGHT: ARCADIS U.S., INC. 2016

IF THIS BAR IS NOT 1" INDICATED SCALE IS INCORRECT

NO.	DATE	ISSUED FOR	BY
0	JUL 2019	BIDDING	HG

SEALS

GEORGIA REGISTERED No. 013444 PROFESSIONAL ENGINEER IVAN M. GONZALEZ July 31, 2019

ARCADIS A Joint Venture
BPA
2839 Paces Ferry Road
Suite 900
Atlanta, GA 30339
Tel: 770-431-8666
Fax: 770-435-2666
www.arcadis-us.com

RESURGENS 1901 ATLANTA, GA. 1991

ATLANTA, GEORGIA
CITY OF ATLANTA
DEPARTMENT OF WATERSHED MANAGEMENT

EAST AREA WATER QUALITY CONTROL FACILITY IMPROVEMENTS

W.01.02.0085

SHEET TITLE

ELECTRICAL DEMOLITION PLAN (3 OF 3)

DATE:	JULY 2019
PROJECT NO.:	GABPA134
DESIGNED BY:	C. ATKINS
DRAWN BY:	C. MARTINI
CHECKED BY:	I. GONZALEZ

SCALE: NONE

E-008

SHEET 88 OF 150

User:THOMAS Spec:AUS-NCSMOD File:I:\ACAD\PROJ\GABPA134 - CSO GROUP 1\BID PACKAGE 2\SHEETS\ELECTRICAL\E-008.DWG Scale:1:1 SavedDate:8/7/2018 Time:15:38 Plot Date: Thomas, Travis; 7/31/2019; 10:43 - Layout:88

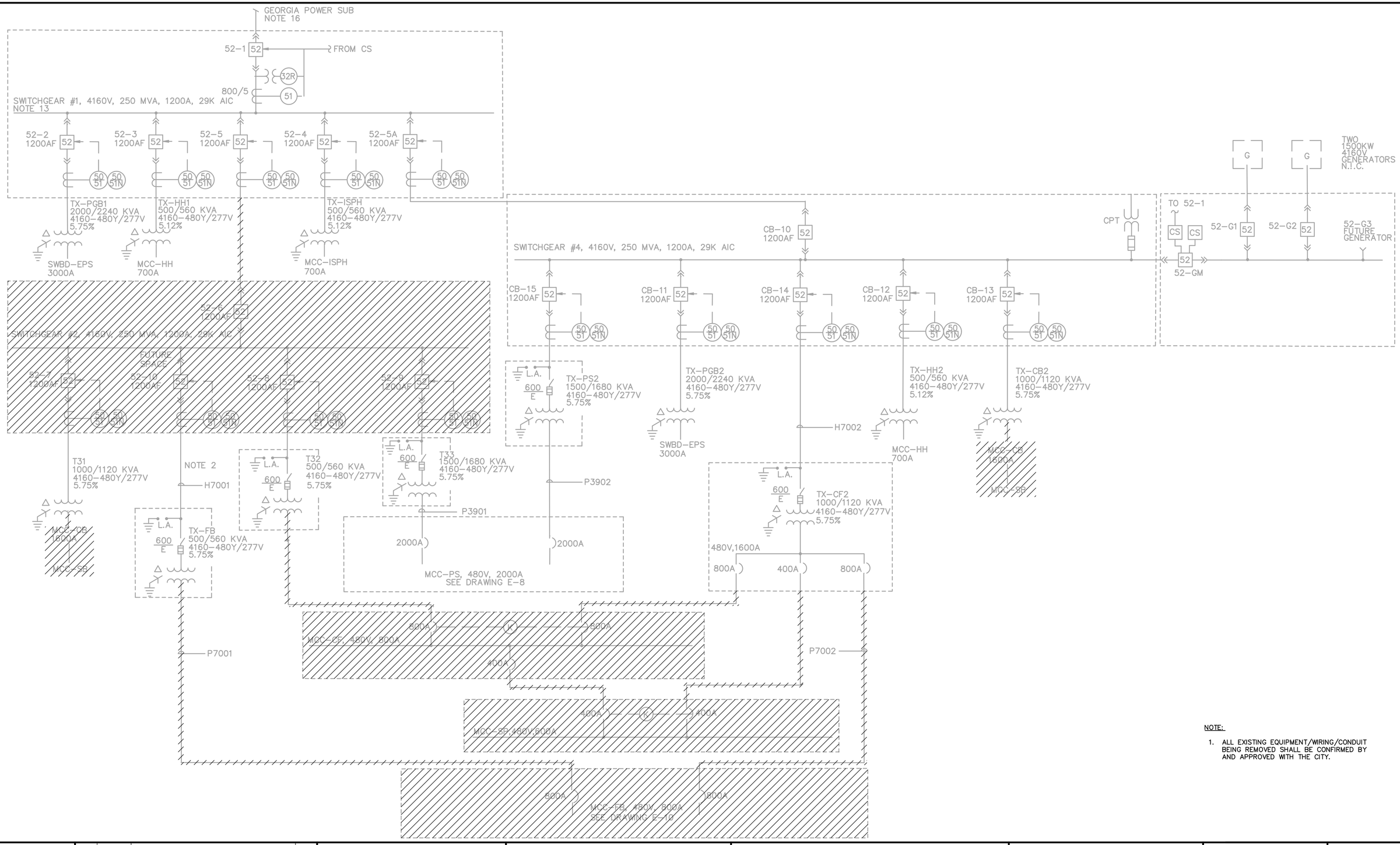

NOTE:

1. ALL EXISTING EQUIPMENT/WIRING/CONDUIT BEING REMOVED SHALL BE CONFIRMED BY AND APPROVED WITH THE CITY.

COPYRIGHT:
ARCADIS U.S., INC.
2016

IF THIS BAR IS NOT 1" INDICATED SCALE IS INCORRECT

NO.	DATE	ISSUED FOR	BY
0	JUL 2019	BIDDING	HG

SEALS

GEORGIA REGISTERED No. 013444 PROFESSIONAL ENGINEER IVAN M. GONZALEZ July 31, 2019

ARCADIS
BPA
A Joint Venture
2839 Paces Ferry Road
Suite 900
Atlanta, GA 30339
Tel: 770-431-8666
Fax: 770-435-2666
www.arcadis-us.com

ATLANTA, GEORGIA
CITY OF ATLANTA
DEPARTMENT OF WATERSHED MANAGEMENT

EAST AREA WATER QUALITY CONTROL FACILITY IMPROVEMENTS

W.01.02.0085

SHEET TITLE

SINGLE LINE DIAGRAM
MAIN SINGLE LINE
DEMOLITION

DATE:	JULY 2019
PROJECT NO.:	GABPA134
DESIGNED BY:	S. PATEL
DRAWN BY:	C. MARTINI
CHECKED BY:	I. GONZALEZ

SCALE: NONE

E-009

SHEET 89 OF 150

User:TTHOMAS Spec:AUS-NCSMOD File:I:\ACAD\PROJ\GABPA134 - CSO GROUP 1\BID PACKAGE 2\SHEETS\ELECTRICAL\E-009.DWG Scale:1:1 SavedDate:2/20/2019 Time:17:21 Plot Date: Thomas, Travis; 7/31/2019; 10:44 ; Layout:89

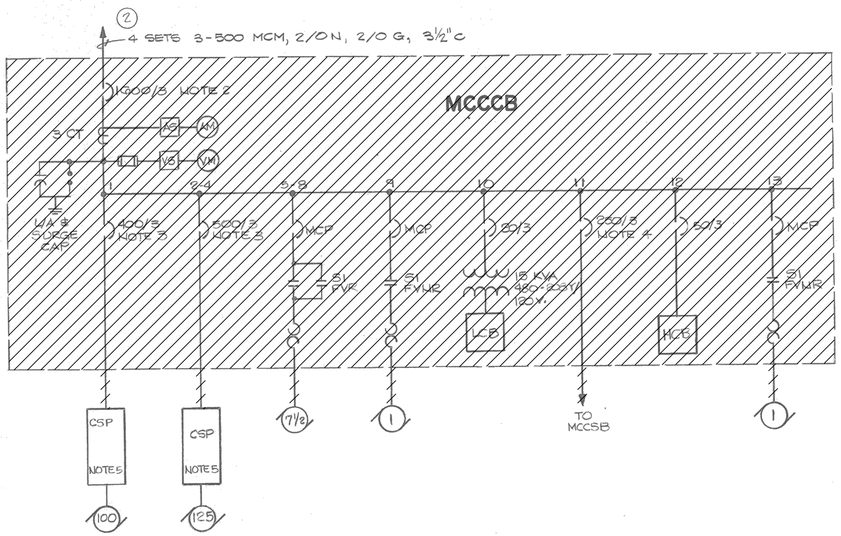

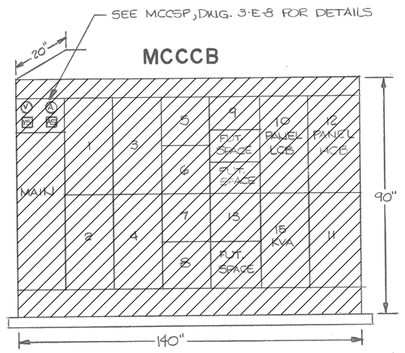

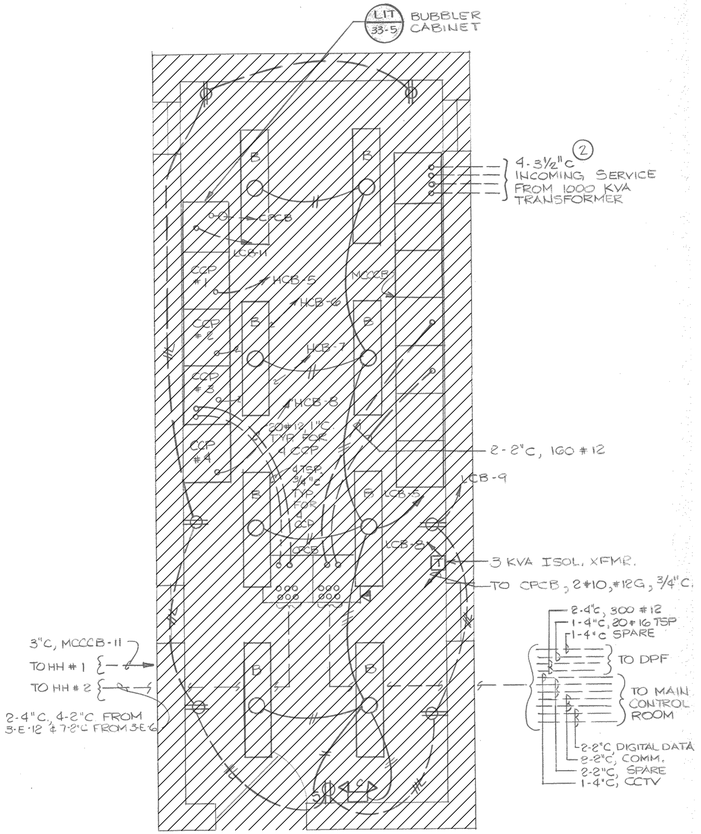

PANEL LCB

VOLTS 120/208 | BUS SIZE 100A | PANEL TYPE KLEARS
PHASE 3 | MAIN 50/3 | M'TING MCCCB
WIRE 4 | A.I.C. 10,000 | BREAKER TYPE BOLT ON

CKT.	LOAD	KW	F.L.A.	WIRE SIZE	C/B
1	AREA LIGHTS	1.9		2#10, ¾"C	20/1
2	"	1.4		"	"
3	"	1.7		"	"
4	"	1.7		"	"
5	CONTROL ROOM LIGHTS	1.6		"	"
6	EF #6	1.8		"	"
7	EXH #8	1.8		2#10, #12G, ¾"C	20/1
8	CRCB	1.8		2#10, #12G, ¾"C	30/1
9	RECEPTACLES	1.9		2#12, #12G, ¾"C	20/1
10	SPARE	—		—	—
11	SPARE EQUIP.	1.9		2#12, #12G, ¾"C	"
12	SPARE EQUIP.	—		—	—
13	HEAT TRACE	1.5			
14	CCTV	1.5			
15	CONVEYOR ALARM	—			DETAIL E3/W6
16	SPARE	—			
17	"				
18	SPACE				1 POLE
19	"				
20	"				

PANEL HCB

VOLTS 480Y/277 | BUS SIZE 100A | PANEL TYPE KLEARS
PHASE 3 | MAIN 100/3 | M'TING MCCCB
WIRE 4 | A.I.C. 22,000 | BREAKER TYPE BOLT ON

CKT.	LOAD	KW	F.L.A.	WIRE SIZE	C/B	
1	HOIST	6		3#12, #12G, ¾"C	20/3	
2	M.O. VALVE 33-35	1.1				
3	M.O. VALVE 33-36	1.1				
4	M.O. VALVE 33-37	1.1				
5	CCP #1	1.8		2#12, #12G, ¾"C	20/2	
6	CCP #2	1.8				
7	CCP #3	1.8				
8	CCP #4	1.8				
9	CENTRIFUGE #1 MTR VLV	1.6		3#12, #12G, ¾"C	20/3	VLV 33-31
10	" #2 " "	1.6		"	"	VLV 33-32
11	" #3 " "	1.6		"	"	VLV 33-33
12	" #4 " "	1.6		"	"	VLV 33-34
13	SPACE				3 POLE	
14						
15						
16						

MOTOR CONTROL CENTER MCCCB

3Ø, 4W, 1600A.

CKT. NO.	EQUIP. TAG NO.	NAMEPLATE DATA	RATING VOLT.	RATING PH.	RATING H.P.	RATING F.L.A.	STARTER DATA C/B	STARTER DATA DISC.	STARTER DATA FUSE	STARTER DATA TYPE	STARTER DATA NEMA SIZE	CIRCUITING DATA POWER WIRE	CIRCUITING DATA CONTROL WIRE	CIRCUITING DATA CONDUIT	CONTROL DIAGRAM
1	35-19	CENTRIFUGE #1	460	3	100		400/3			—	—	3-500 MCM + #2G	12-#12	5"	—
2	-20	#2			100		500/3			—	—	3-500 MCM + #2G	"	5"	—
3	-21	#3					—			—	—	—	—	—	—
4	-22	#4					—			—	—	—	—	—	—
5	-15	CONVEYOR #1			1½		MCP			FVR	1	3-#12, #12G	10-#12	1"	FM7 ③
6	-16	#2													
7	-17	#3													
8	-18	#4													
9	1	SAT MECHANISM			1					5VMR		—	—	—	CM7
10	—	PANEL LCB				10	20/3			—	—	—	—	—	—
11	—	MCC 36 FEEDER				150	50/3			—	—	3-250 KCM + #4G	—	3"	—
12	—	PANEL HCB					5/3			—	—	—	—	—	—
13	—	SAMPLE PUMP			1		MCP			FVNR	1	3-#12, #12G	5-#12	1½"	MN1

CENTRIFUGE CONTROL BUILDING
POWER & LIGHTING

NOTE:

1. ALL EXISTING EQUIPMENT/WIRING/CONDUIT BEING REMOVED SHALL BE CONFIRMED BY AND APPROVED WITH THE CITY.
2. FOR DEMOLITION SEE SPEC SECTION 02050.

COPYRIGHT: ARCADIS U.S., INC. 2016

IF THIS BAR IS NOT 1" INDICATED SCALE IS INCORRECT

NO.	DATE	ISSUED FOR	BY
0	JUL 2019	BIDDING	HG

SEALS

GEORGIA REGISTERED No. 013444 PROFESSIONAL ENGINEER I. N. M. GONZALEZ July 31, 2019

ARCADIS A Joint Venture
BPA
2839 Paces Ferry Road
Suite 900
Atlanta, GA 30339
Tel: 770-431-8666
Fax: 770-435-2666
www.arcadis-us.com

ATLANTA, GEORGIA
CITY OF ATLANTA
DEPARTMENT OF WATERSHED MANAGEMENT

EAST AREA WATER QUALITY CONTROL FACILITY IMPROVEMENTS

W.01.02.0085

SHEET TITLE

SINGLE LINE DIAGRAM
CENTRIFUGE BUILDING
MCC-CB DEMOLITION

DATE:	JULY 2019
PROJECT NO.:	GABPA134
DESIGNED BY:	S. PATEL
DRAWN BY:	C. MARTINI
CHECKED BY:	I. GONZALEZ

SCALE: NONE

E-010

SHEET 90 OF 150

User: TTHOMAS Spec: AUS-NCSMOD File: I:\ACAD\PROJ\GABPA134 - CSO GROUP 1\BID PACKAGE 2\SHEETS\ELECTRICAL\E-010.DWG Scale: 1:1 SavedDate: 3/20/2019 Time: 11:29 Plot Date: Thomas, Travis; 7/31/2019; 10:46 ; Layout: 90

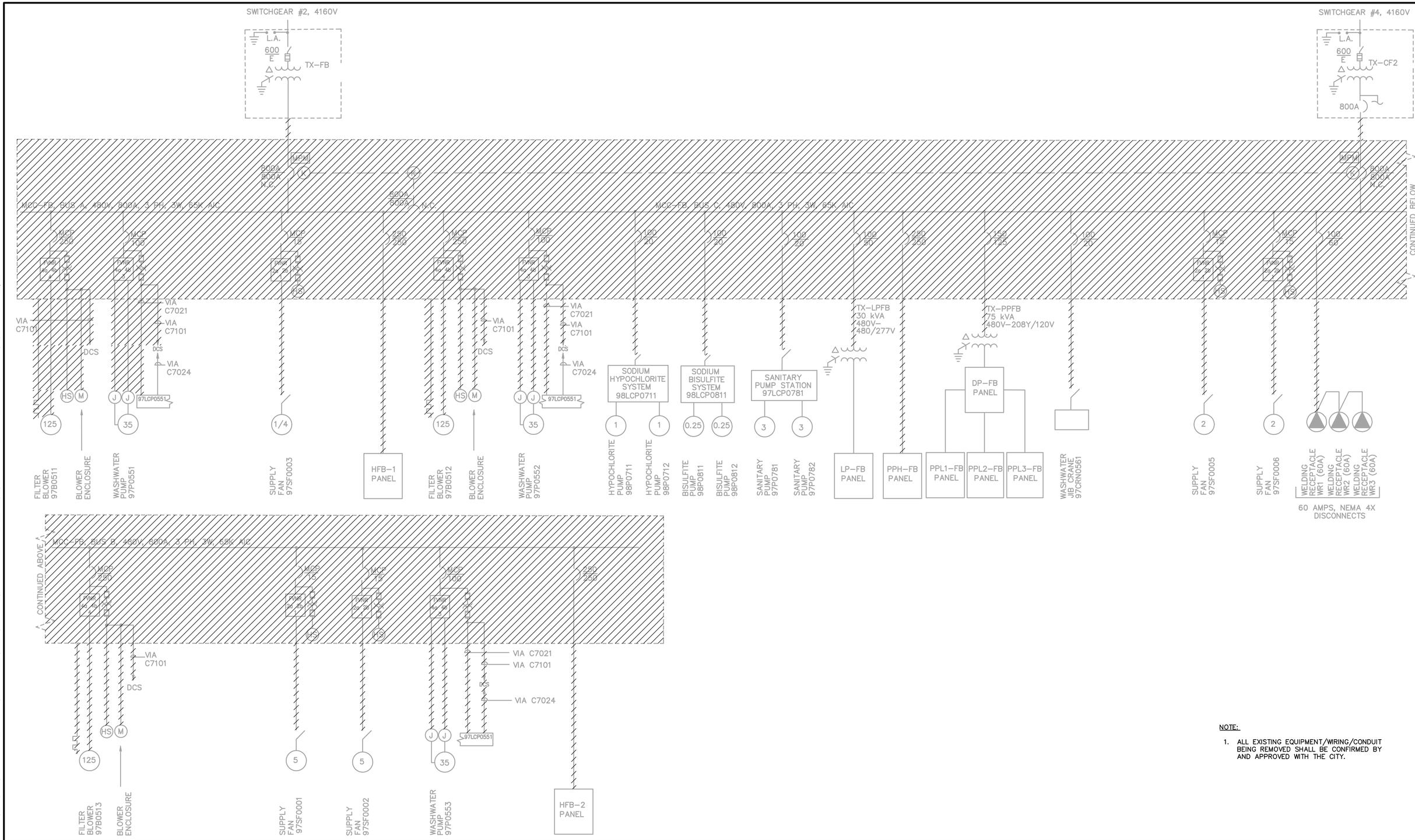

NOTE:

1. ALL EXISTING EQUIPMENT/WIRING/CONDUIT BEING REMOVED SHALL BE CONFIRMED BY AND APPROVED WITH THE CITY.

COPYRIGHT: ARCADIS U.S., INC. 2016

IF THIS BAR IS NOT 1" INDICATED SCALE IS INCORRECT

NO.	DATE	ISSUED FOR	BY
0	JUL 2019	BIDDING	HG

SEALS

GEORGIA REGISTERED No. 013444 PROFESSIONAL ENGINEER IVAN M. GONZALEZ July 31, 2019

ARCADIS BPA A Joint Venture
2839 Paces Ferry Road
Suite 900
Atlanta, GA 30339
Tel: 770-431-8666
Fax: 770-435-2666
www.arcadis-us.com

ATLANTA, GEORGIA
CITY OF ATLANTA
DEPARTMENT OF WATERSHED MANAGEMENT

EAST AREA WATER QUALITY CONTROL FACILITY IMPROVEMENTS

W.01.02.0085

SHEET TITLE

SINGLE LINE DIAGRAM FILTER BUILDING MCC-FB DEMOLITION

DATE:	JULY 2019
PROJECT NO.:	GABPA134
DESIGNED BY:	S. PATEL
DRAWN BY:	C. MARTINI
CHECKED BY:	I. GONZALEZ

SCALE: NONE

E-011

SHEET 91 OF 150

User: TTHOMAS Spec: AUS-NCSM0D File: I:\ACAD\PROJ\GABPA134 - CSO GROUP 1\BID PACKAGE 2\SHEETS\ELECTRICAL\E-011.DWG Scale: 1:1 SavedDate: 2/21/2019 Time: 13:52 Plot Date: Thomas, Travis; 7/31/2019, 10:48 :: Layout: 91

User:TTHOMAS Spec:AUS-NCSMOD File:I:\ACAD\PROJ\GABPA134 - CSO GROUP 1\BID PACKAGE 2\SHEETS\ELECTRICAL\E-012.DWG Scale:1:1 SavedDate:2/21/2019 Time:16:25 Plot Date: Thomas, Travis; 7/31/2019; 10:49 ; Layout:92

SWITCHGEAR #2, 4160V

L.A.
600
E
T32

SWITCHGEAR #4, 4160V

L.A.
600
E
TX-CF2
800A

800A
800A

800A
800A

MCC-CF, 480V, 800A, 3PH, 3W, 42K AIC (NOTE 1)

CONTINUED BELOW

100A
20A

250A
250A

400A
CL J

MCP
PWR
1a 1b

150A
150A

MCP
PWR
1a 1b

MCP
PWR
1a 1b

MCP
PWR
1a 1b

MCP
PWR
1a 1b

HCF

30 KVA
480-120/208V

LCF

AREA LIGHTING

0.75

SUPPLY FAN
SF-5-1

0.75

SUPPLY FAN
SF-5-2

HCP-2

15 KVA
480-120/208V

LCP-2

3

EXHAUST FAN
EF-5-1

3

EXHAUST FAN
EF-5-2

CONTINUED ABOVE

NOTE B

100
20

100
20

400
400

100
70

MCP
3
PWR
2a 2b

MCP
3
PWR
2a 2b

100
20

(HS)

(LS)

75 KVA
TRANS

HEAT
TRACE
PANEL
(HTP1)

WASTE CHEMICAL STATION
94LCP3118

1.5

1.5

WASTE CHEMICAL
94P3118

WASTE CHEMICAL
94P3119

SUMP PUMPS

MCC-SP FEEDER

VORTEX SEPARATOR
95LCP0111

20

SUBMERSIBLE PUMP
95P0111

1

GENERAL EXHAUST
94EF0003

ML

LOUVER

1

GENERAL EXHAUST
94EF0004

ML

LOUVER

MONORAIL

MONORAIL W/
HOIST &
TROLLEY
95HST0131

NOTE:

1. ALL EXISTING EQUIPMENT/WIRING/CONDUIT BEING REMOVED SHALL BE CONFIRMED BY AND APPROVED WITH THE CITY.

COPYRIGHT:
ARCADIS U.S., INC.
2016

IF THIS BAR IS NOT 1" INDICATED SCALE IS INCORRECT

NO.	DATE	ISSUED FOR	BY
0	JUL 2019	BIDDING	HG

SEALS

GEORGIA REGISTERED No. 013444 PROFESSIONAL ENGINEER IVAN M. GONZALEZ July 31, 2019

ARCADIS
BPA
A Joint Venture

2839 Paces Ferry Road
Suite 900
Atlanta, GA 30339
Tel: 770-431-8666
Fax: 770-435-2666
www.arcadis-us.com

ATLANTA, GEORGIA
CITY OF ATLANTA
DEPARTMENT OF WATERSHED MANAGEMENT

EAST AREA WATER QUALITY CONTROL FACILITY IMPROVEMENTS

W.01.02.0085

SHEET TITLE

SINGLE LINE DIAGRAM
CHEMICAL BUILDING
MCC-CF DEMOLITION

DATE:	JULY 2019
PROJECT NO.:	GABPA134
DESIGNED BY:	S. PATEL
DRAWN BY:	C. MARTINI
CHECKED BY:	I. GONZALEZ

SCALE: NONE

E-012

SHEET 92 OF 150

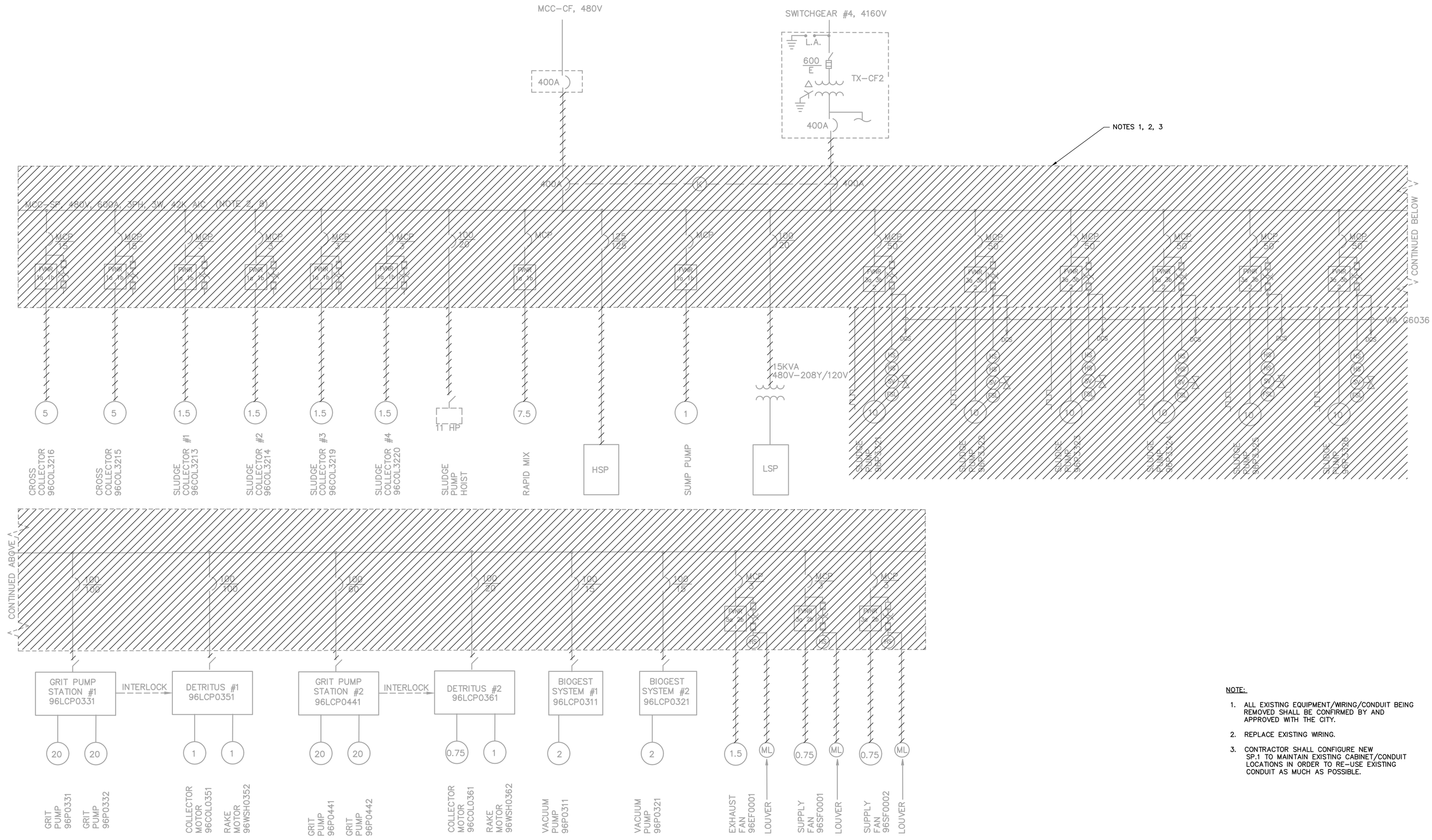

NOTE:

1. ALL EXISTING EQUIPMENT/WIRING/CONDUIT BEING REMOVED SHALL BE CONFIRMED BY AND APPROVED WITH THE CITY.
2. REPLACE EXISTING WIRING.
3. CONTRACTOR SHALL CONFIGURE NEW SP.1 TO MAINTAIN EXISTING CABINET/CONDUIT LOCATIONS IN ORDER TO RE-USE EXISTING CONDUIT AS MUCH AS POSSIBLE.

COPYRIGHT: ARCADIS U.S., INC. 2016

IF THIS BAR IS NOT 1" INDICATED SCALE IS INCORRECT

NO.	DATE	ISSUED FOR	BY
0	JUL 2019	BIDDING	HG

SEALS

GEORGIA REGISTERED No. 013444 PROFESSIONAL ENGINEER M. GONZALEZ July 31, 2019

ARCADIS A Joint Venture
BPA
2839 Paces Ferry Road
Suite 900
Atlanta, GA 30339
Tel: 770-431-8666
Fax: 770-435-2666
www.arcadis-us.com

ATLANTA, GEORGIA
CITY OF ATLANTA
DEPARTMENT OF WATERSHED MANAGEMENT

EAST AREA WATER QUALITY CONTROL FACILITY IMPROVEMENTS

W.01.02.0085

SHEET TITLE

SINGLE LINE DIAGRAM SLUDGE PUMPING STATION MCC-SP DEMOLITION

DATE:	JULY 2019
PROJECT NO.:	GABPA134
DESIGNED BY:	S. PATEL
DRAWN BY:	C. MARTINI
CHECKED BY:	I. GONZALEZ

SCALE: NONE

E-013

SHEET 93 OF 150

User: TTHOMAS Spec: AUS-NCSMOD File: I:\ACAD\PROJ\GABPA134 - CSO GROUP 1\BID PACKAGE 2\SHEETS\ELECTRICAL\E-013.DWG Scale: 1:1 SavedDate: 3/4/2019 Date: 3/4/2019 Time: 19:34 Plot Date: Thomas, Travis; 7/31/2019; 10:50 ; Layout: 93

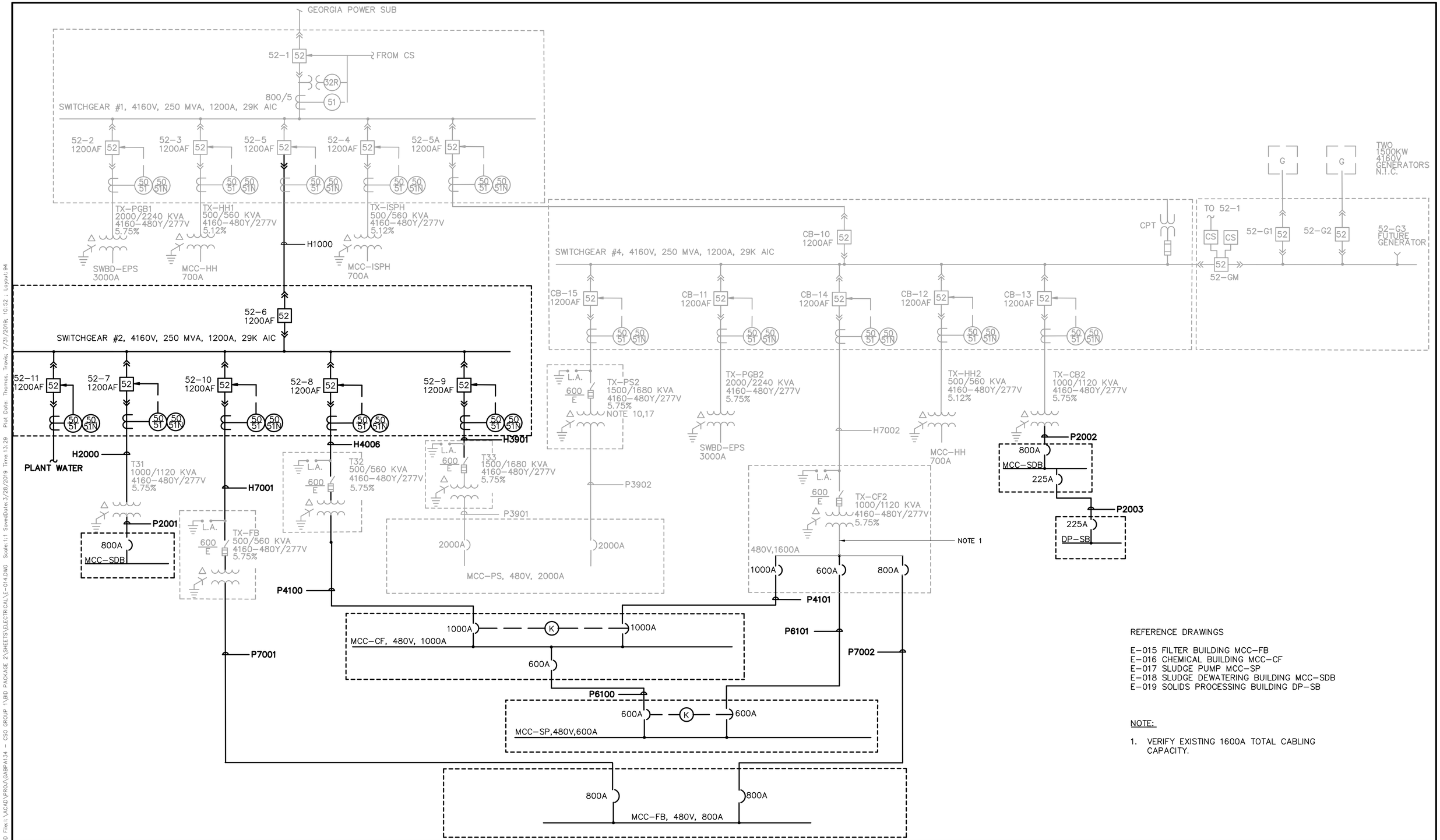

REFERENCE DRAWINGS

E-015 FILTER BUILDING MCC-FB
E-016 CHEMICAL BUILDING MCC-CF
E-017 SLUDGE PUMP MCC-SP
E-018 SLUDGE DEWATERING BUILDING MCC-SDB
E-019 SOLIDS PROCESSING BUILDING DP-SB

NOTE:

1. VERIFY EXISTING 1600A TOTAL CABLING CAPACITY.

COPYRIGHT: ARCADIS U.S., INC. 2016

IF THIS BAR IS NOT 1" INDICATED SCALE IS INCORRECT

NO.	DATE	ISSUED FOR	BY
0	JUL 2019	BIDDING	HG

SEALS

GEORGIA REGISTERED No. 013444 PROFESSIONAL ENGINEER IVAN M. GONZALEZ July 31, 2019

ARCADIS A Joint Venture
BPA
2839 Paces Ferry Road
Suite 900
Atlanta, GA 30339
Tel: 770-431-8666
Fax: 770-435-2666
www.arcadis-us.com

ATLANTA, GEORGIA
CITY OF ATLANTA
DEPARTMENT OF WATERSHED MANAGEMENT

EAST AREA WATER QUALITY CONTROL FACILITY IMPROVEMENTS

W.01.02.0085

SHEET TITLE

SINGLE LINE DIAGRAM
MAIN SINGLE LINE 1
PROPOSED

DATE:	JULY 2019
PROJECT NO.:	GABPA134
DESIGNED BY:	C. ATKINS
DRAWN BY:	C. MARTINI
CHECKED BY:	I. GONZALEZ

SCALE: NONE

E-014

SHEET 94 OF 150

User: TTHOMAS Spec: AUS-NCSMOD File:I:\ACAD\PROJ\GABPA134 - CSO GROUP 1\BID PACKAGE 2\SHEETS\ELECTRICAL\E-014.DWG Scale:1:1 SavedDate:3/28/2019 Plot Date: Thomas, Travis; 7/31/2019; 10:52 - Layout: 94 Time:13:29

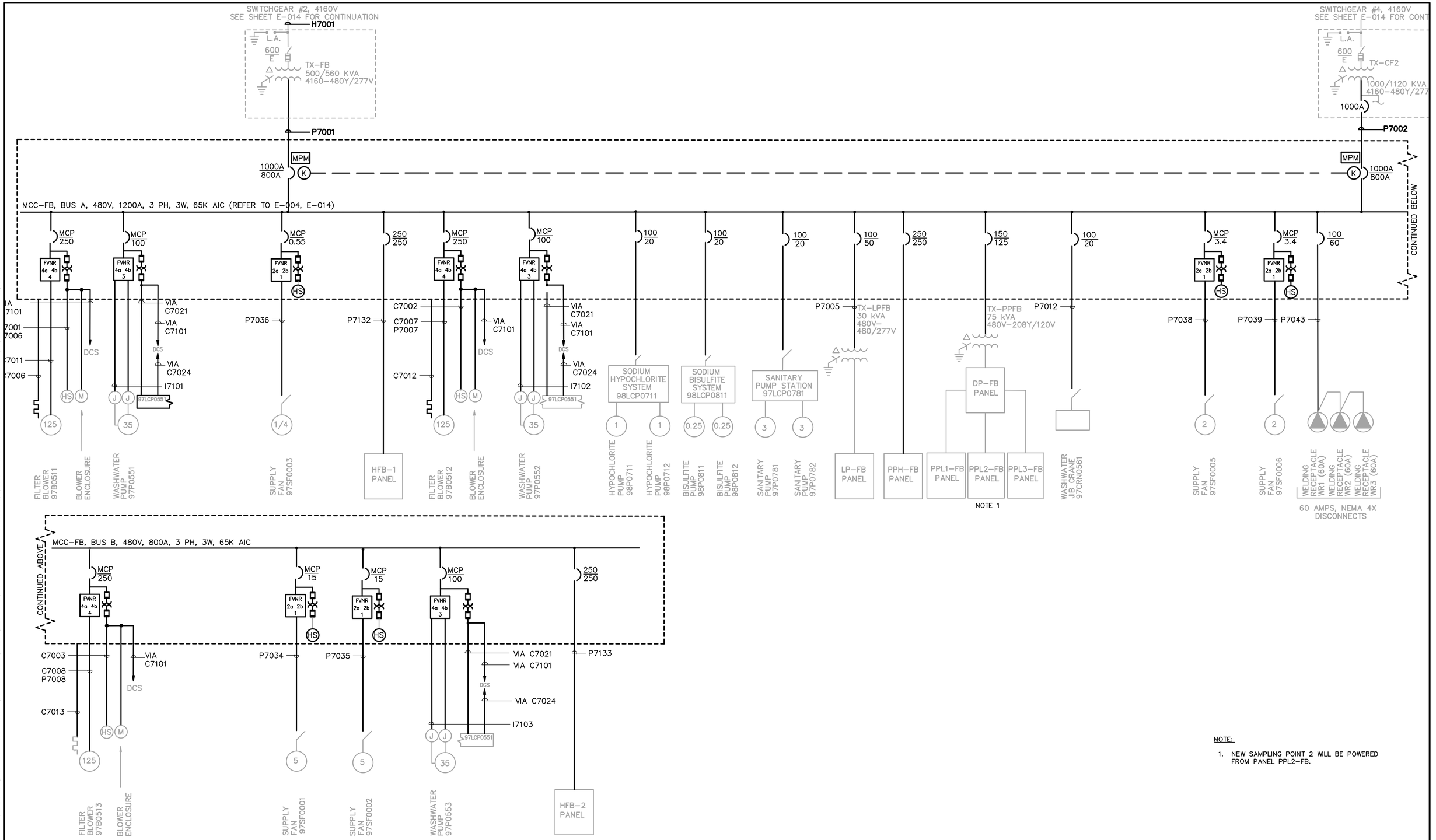

NOTE:

1. NEW SAMPLING POINT 2 WILL BE POWERED FROM PANEL PPL2-FB.

COPYRIGHT: ARCADIS U.S., INC. 2016

IF THIS BAR IS NOT 1" INDICATED SCALE IS INCORRECT

NO.	DATE	ISSUED FOR	BY
0	JUL 2019	BIDDING	HG

SEALS

GEORGIA REGISTERED No. 013444 PROFESSIONAL ENGINEER IVAN M. GONZALEZ July 31, 2019

ARCADIS A Joint Venture
BPA
2839 Paces Ferry Road
Suite 900
Atlanta, GA 30339
Tel: 770-431-8666
Fax: 770-435-2666
www.arcadis-us.com

ATLANTA, GEORGIA
CITY OF ATLANTA
DEPARTMENT OF WATERSHED MANAGEMENT

EAST AREA WATER QUALITY CONTROL FACILITY IMPROVEMENTS

W.01.02.0085

SHEET TITLE

SINGLE LINE DIAGRAM
FILTER BUILDING
MCC-FB PROPOSED

DATE:	JULY 2019
PROJECT NO.:	GABPA134
DESIGNED BY:	S. PATEL
DRAWN BY:	C. MARTINI
CHECKED BY:	I. GONZALEZ

SCALE: NONE

E-015

SHEET 95 OF 150

User: TTHOMAS Spec: AUS-NCSMOD File: I:\ACAD\PROJ\GABPA134 - CSO GROUP 1\BID PACKAGE 2\SHEETS\ELECTRICAL\E-015.DWG Scale: 1:1 SavedDate: 3/8/2019 Time: 18:11 Plot Date: Thomas, Travis; 7/31/2019; 10:54 ; Layout: 95

SWITCHGEAR #2, 4160V
SEE SHEET E-014 FOR CONTINUATION

SWITCHGEAR #4, 4160V
SEE SHEET E-014 FOR CONTINUATION

H4006

L.A.
600
E
T32
500/560 KVA
4160-480Y/277

L.A.
600
E
TX-CF2
1000/1120 KVA
4160-480Y/277

1000A

P4001

P4101

1000A
1000A

K

1000A
1000A

MCC-CF, 480V, 1200A, 3PH, 3W, 65K AIC (REFER TO E-003, E-014)

CONTINUED BELOW

100A
20A
SPD

250A
250A
400A
CL. J.

MCP
1.6
FVNR
1a 1b
1

MCP
1.6
FVNR
1a 1b
1

150A
150A

MCP
FVNR
1a 1b
1

MCP
4.8
FVNR
1a 1b
1

MCP
4.8
FVNR
1a 1b
1

P4016

HCF

30 KVA
480-120/208V

LCF

AREA
LIGHTING

P4017

0.75

SUPPLY FAN
SF-5-1

P4018

0.75

SUPPLY FAN
SF-5-2

P4015

HCP-2

15 KVA
480-120/208V

LCP-2

P4012

3

EXHAUST FAN
EF-5-1

P4013

3

EXHAUST FAN
EF-5-2

CONTINUED ABOVE

100
20

100
20

P4012

75 kVA
TRANS

HEAT
TRACE
PANEL

WASTE CHEMICAL STATION
94LCP3118

1.5

WASTE
CHEMICAL
94P3118

1.5

WASTE
CHEMICAL
94P3119

P40

SUMP
PUMPS

100
70

P5001

VORTEX
SEPARATOR
95LCP0111

20

SUBMERSIBLE
PUMP
95P0111

MCP
2.1
FVNR
2a 2b
1
HS

P4010

1

ML

LOUVER

GENERAL
EXHAUST
94EF0003

MCP
2.1
FVNR
2a 2b
1
HS

P4001

1

ML

LOUVER

GENERAL
EXHAUST
94EF0004

100
20

P4001

P4001

MONORAIL

MONORAIL W/
HOIST &
TROLLEY
95HST0131

600
600

P6100

MCC-SP
FEEDER

COPYRIGHT:
ARCADIS U.S., INC.
2016

IF THIS BAR IS NOT 1" INDICATED SCALE IS INCORRECT

NO.	DATE	ISSUED FOR	BY
0	JUL 2019	BIDDING	HG

SEALS

GEORGIA REGISTERED No. 013444 PROFESSIONAL ENGINEER IVAN M. GONZALEZ July 31, 2019

ARCADIS
BPA
A Joint Venture

2839 Paces Ferry Road
Suite 900
Atlanta, GA 30339
Tel: 770-431-8666
Fax: 770-435-2666
www.arcadis-us.com

RESURGENS ISO 9001 ATLANTA, GA

ATLANTA, GEORGIA
CITY OF ATLANTA
DEPARTMENT OF WATERSHED MANAGEMENT

EAST AREA WATER QUALITY CONTROL
FACILITY IMPROVEMENTS

W.01.02.0085

SHEET TITLE

SINGLE LINE DIAGRAM CHEMICAL BUILDING MCC-CF PROPOSED

DATE: JULY 2019
PROJECT NO.: GABPA134
DESIGNED BY: S. PATEL
DRAWN BY: C. MARTINI
CHECKED BY: I. GONZALEZ

SCALE: NONE

E-016

SHEET 96 OF 150

User:TTHOMAS Spec:AUS-NCSMOD File:I:\ACAD\PROJ\GABPA134 - CSO GROUP 1\BID PACKAGE 2\SHEETS\ELECTRICAL\E-016.DWG Scale:1:1 SavedDate:3/8/2019 Time:17:21 Plot Date: Thomas, Travis; 7/31/2019; 10:58 ; Layout:96

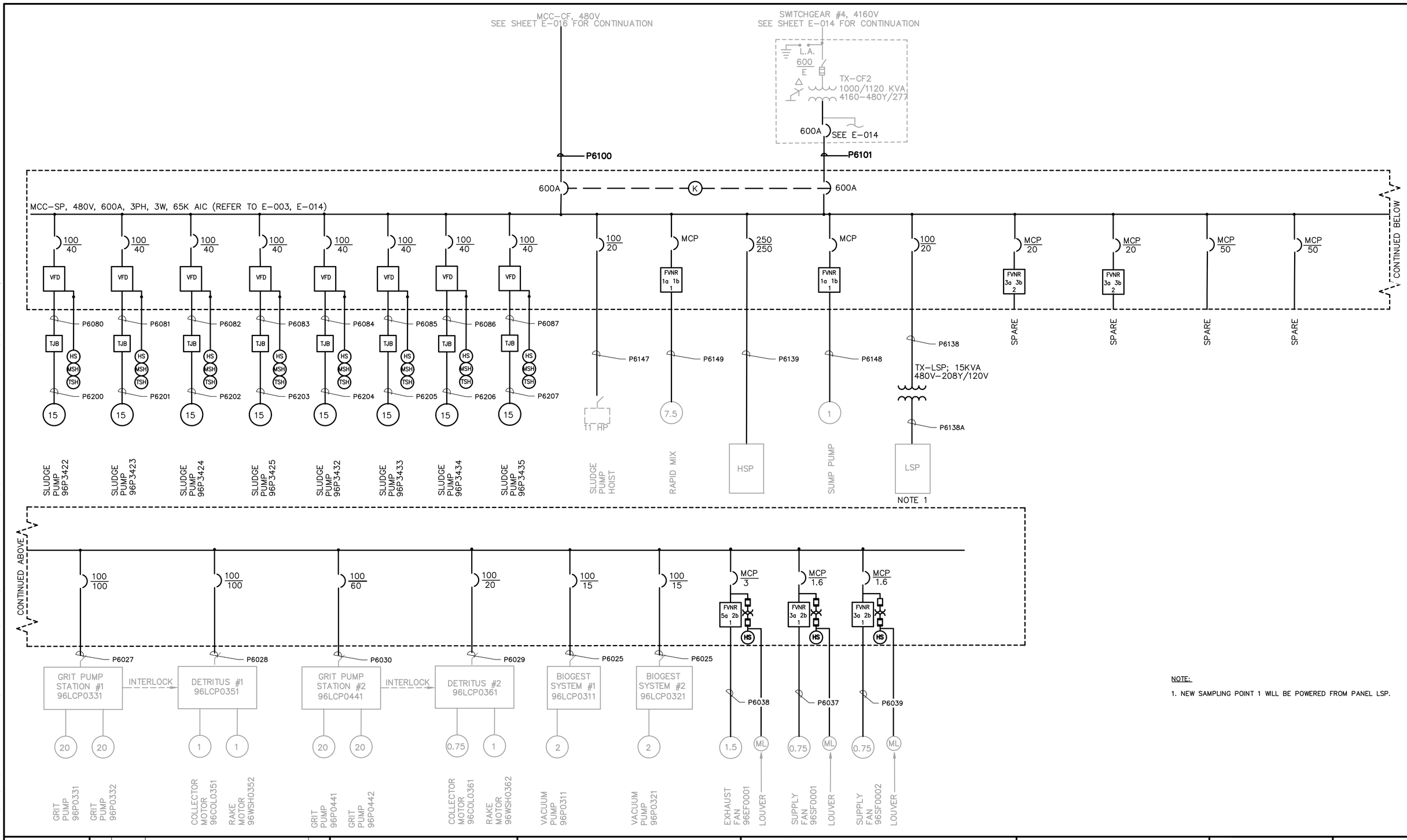

NOTE:

1. NEW SAMPLING POINT 1 WILL BE POWERED FROM PANEL LSP.

COPYRIGHT:
ARCADIS U.S., INC.
2016

IF THIS BAR IS NOT 1" INDICATED SCALE IS INCORRECT

NO.	DATE	ISSUED FOR	BY
0	JUL 2019	BIDDING	HG

SEALS

GEORGIA REGISTERED No. 013444 PROFESSIONAL ENGINEER IVAN M. GONZALEZ July 31, 2019

ARCADIS
BPA
A Joint Venture
2839 Paces Ferry Road
Suite 900
Atlanta, GA 30339
Tel: 770-431-8666
Fax: 770-435-2666
www.arcadis-us.com

ATLANTA, GEORGIA
CITY OF ATLANTA
DEPARTMENT OF WATERSHED MANAGEMENT

EAST AREA WATER QUALITY CONTROL FACILITY IMPROVEMENTS

W.01.02.0085

SHEET TITLE

SINGLE LINE DIAGRAM SLUDGE PUMPING STATION MCC-SP PROPOSED

DATE:	JULY 2019
PROJECT NO.:	GABPA134
DESIGNED BY:	S. PATEL
DRAWN BY:	C. MARTINI
CHECKED BY:	I. GONZALEZ

SCALE: NONE

E-017

SHEET 97 OF 150

User: TTHOMAS Spec: AUS-NCSM00 File:\\ACAD\PROJ\GABPA134 - CSO GROUP 1\BID PACKAGE 2\SHEETS\ELECTRICAL\E-017.DWG Scale:1:1 SavedDate:3/20/2019 Time:10:33 Plot Date: Thomas, Travis; 7/31/2019; 11:00 ; Layout:97

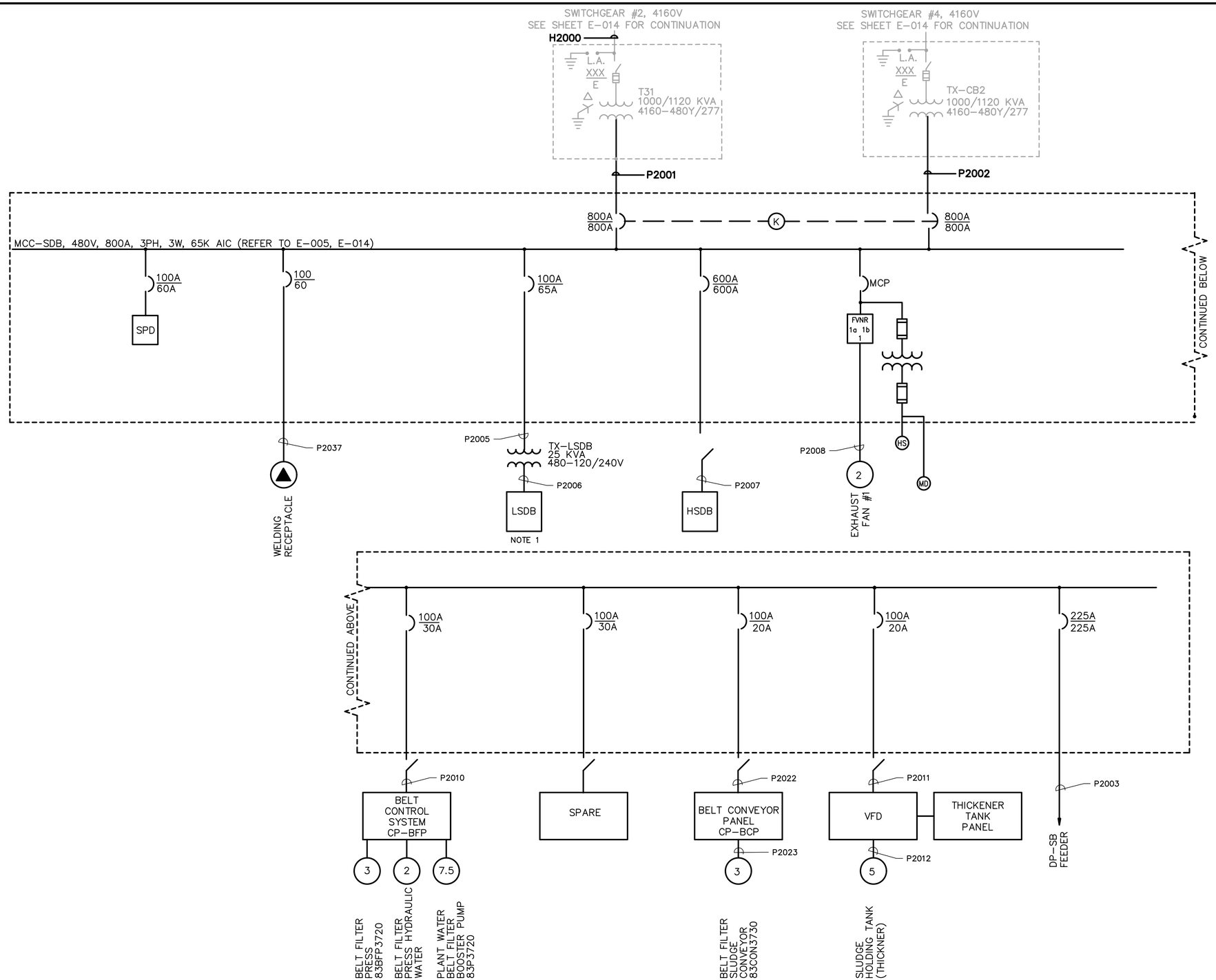

NOTE:

1. POLYMER SYSTEM POWERED FROM PANEL LSDB.

User: TTHOMAS Spec: AUS-NCSMOD File: I:\ACAD\PROJ\GABPA134 - CSO GROUP 1\BID PACKAGE 2\SHEETS\ELECTRICAL\E-018.DWG Scale: 1:1 SavedDate: 2/22/2019 Time: 15:56 Plot Date: Thomas, Travis; 7/31/2019; 11:01 ; Layout: 98

COPYRIGHT:
ARCADIS U.S., INC.
2016

IF THIS BAR IS NOT 1" INDICATED SCALE IS INCORRECT

NO.	DATE	ISSUED FOR	BY
0	JUL 2019	BIDDING	HG

SEALS

GEORGIA REGISTERED No. 013444 PROFESSIONAL ENGINEER NANM. GONZALEZ July 31, 2019

ARCADIS BPA
A Joint Venture

ATLANTA, GEORGIA
CITY OF ATLANTA
DEPARTMENT OF WATERSHED MANAGEMENT

EAST AREA WATER QUALITY CONTROL
FACILITY IMPROVEMENTS

W.01.02.0085

SHEET TITLE

SINGLE LINE DIAGRAM
SLUDGE DEWATERING
BUILDING MCC-SDB
PROPOSED

DATE:	JULY 2019
PROJECT NO.:	GABPA134
DESIGNED BY:	S. PATEL
DRAWN BY:	C. MARTINI
CHECKED BY:	I. GONZALEZ

SCALE: NONE

E-018

SHEET 98 OF 150

User: TTHOMAS Spec: AUS-NCSMOD File I: \ACAD\PROJ\GABPA134 - CSO GROUP 1\BID PACKAGE 2\SHEETS\ELECTRICAL\E-019.DWG Scale: 1:1 SavedDate: 3/28/2019 Time: 13:29 Plot Date: Thomas, Travis; 7/31/2019; 11:03 ; Layout: 99

MCC-SDB, 480V
SEE SHEET E-018 FOR CONTINUATION

P2003

225A / 225A

DP-SB, 480V, 400A, 3PH, 3W, 65K AIC

100A / 60A	100 / 20	100 / 20	100 / 30	100 / 30	100A / 100A	100 / 20	100 / 20
SPD	P1201	P1202	P1203	P1204	P1205	SPARE	SPARE
	GRINDER PUMP PANEL	GRINDER PUMP PANEL	VFD	VFD	HSB		
	P1201A	P1202A	P1203A	P1204A	P1205A		
	3	3	10	10	TX-LSB 15 KVA 480-120/208V		
			HS PSH PSL	HS PSH PSL	P1205B		
	GRINDER PUMP 82P3612	GRINDER PUMP 82P3614	BFP FEED PUMP 82P3602	BFP FEED PUMP 82P3604	LSB NOTE 1		

COPYRIGHT: ARCADIS U.S., INC. 2016

IF THIS BAR IS NOT 1" INDICATED SCALE IS INCORRECT

NO.	DATE	ISSUED FOR	BY
0	JUL 2019	BIDDING	HG

SEALS

GEORGIA REGISTERED No. 013444 PROFESSIONAL ENGINEER IVAN M. GONZALEZ July 31, 2019

ARCADIS A Joint Venture
BPA
2839 Paces Ferry Road
Suite 900
Atlanta, GA 30339
Tel: 770-431-8666
Fax: 770-435-2666
www.arcadis-us.com

ATLANTA, GEORGIA
CITY OF ATLANTA
DEPARTMENT OF WATERSHED MANAGEMENT

EAST AREA WATER QUALITY CONTROL FACILITY IMPROVEMENTS

W.01.02.0085

SHEET TITLE

SINGLE LINE DIAGRAM SOLIDS PROCESSING BUILDING DP-SB PROPOSED

DATE: JULY 2019
PROJECT NO.: GABPA134
DESIGNED BY: C. ATKINS
DRAWN BY: C. MARTINI
CHECKED BY: I. GONZALEZ

SCALE: NONE

E-019

SHEET 99 OF 150

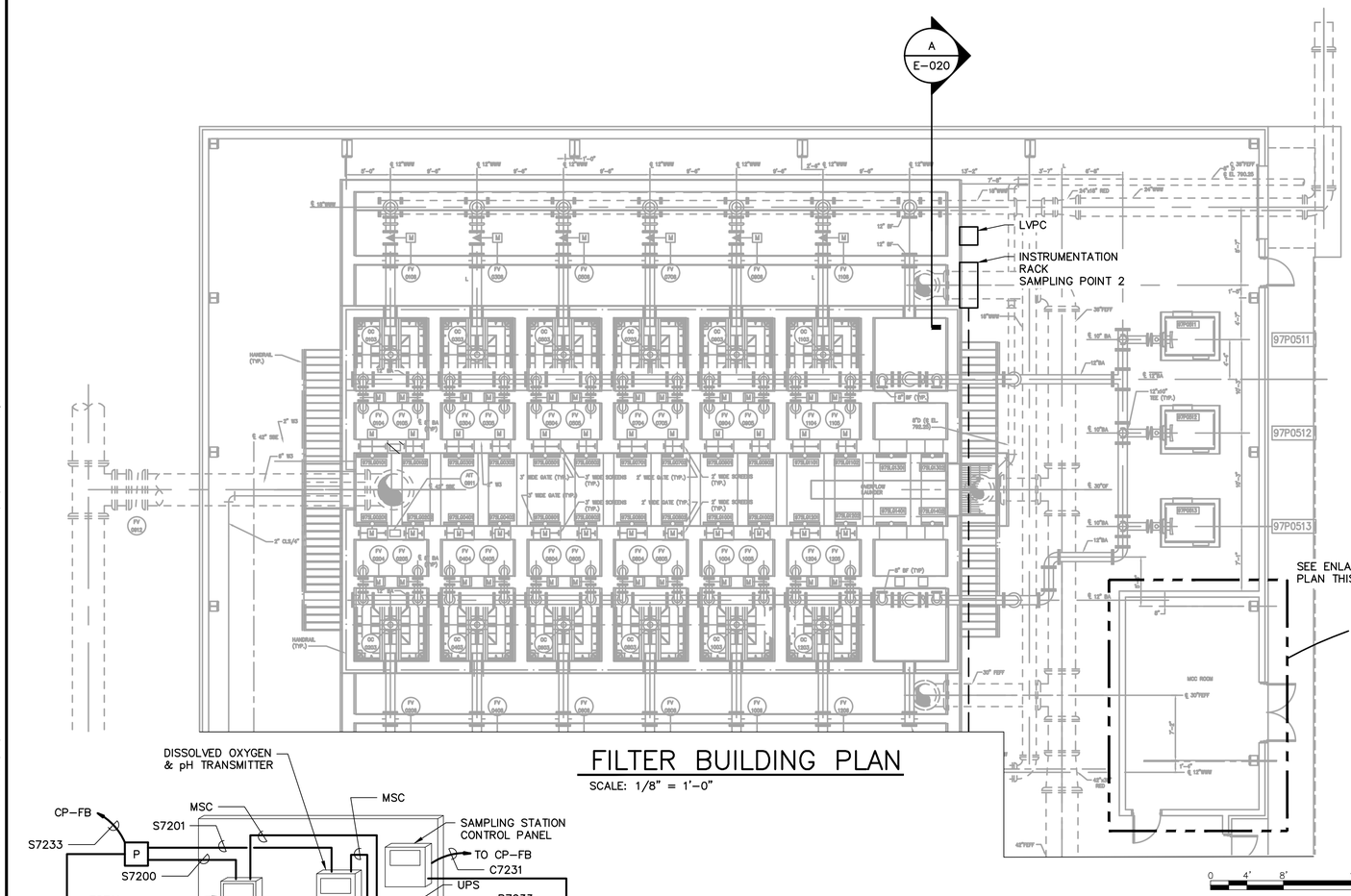

FILTER BUILDING PLAN

SCALE: 1/8" = 1'-0"

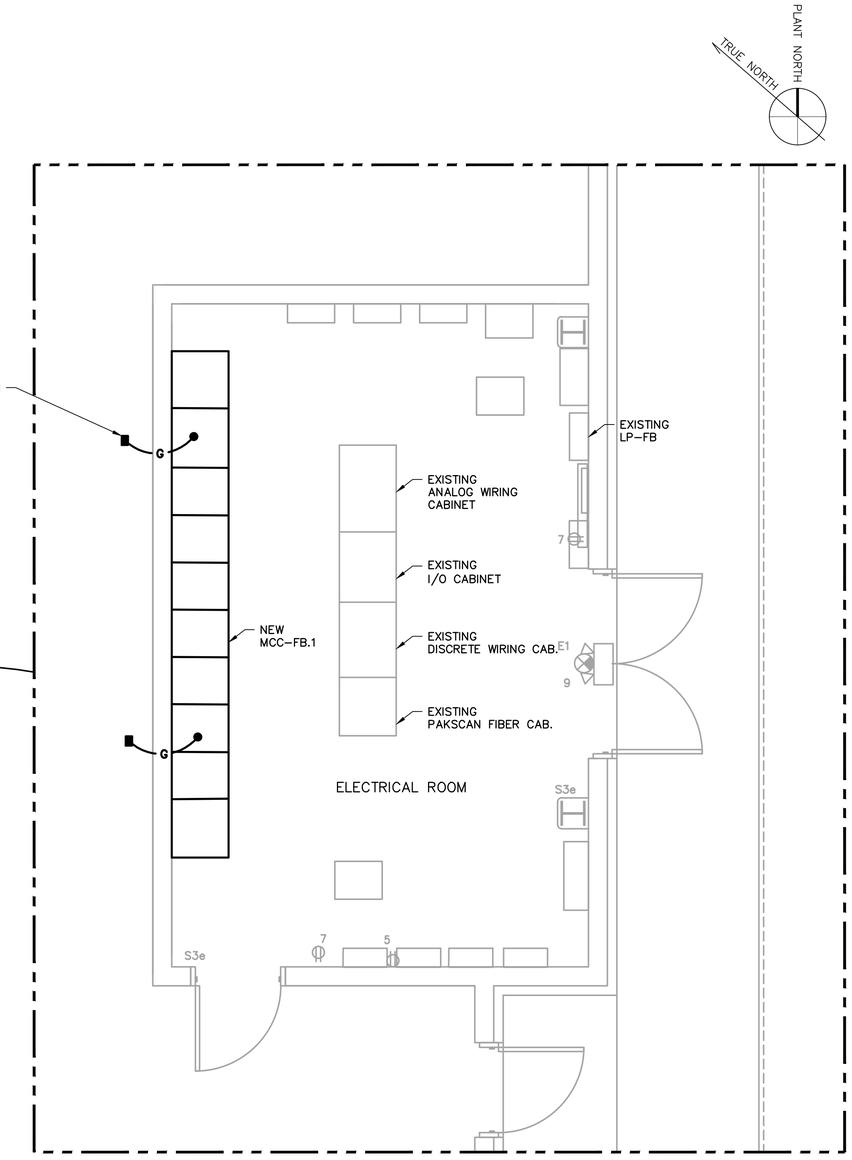

ELECTRICAL ROOM

SCALE: 3/8" = 1'-0"

NOTES:

1. CONNECT TO EXISTING GROUNDING SYSTEM. MATCH EXISTING GROUND WIRE SIZE.

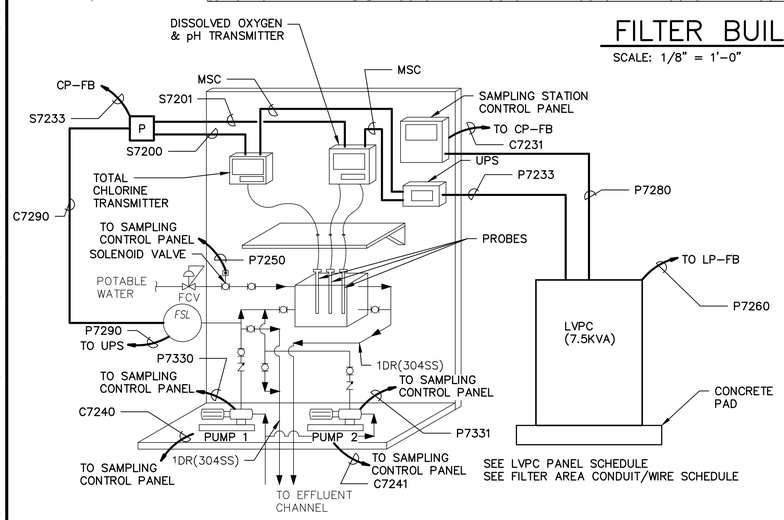

A E-020 INSTRUMENT RACK SCHEMATIC SAMPLING POINT 2

SCALE: N.T.S.

COPYRIGHT: ARCADIS U.S., INC. 2016

IF THIS BAR IS NOT 1" INDICATED SCALE IS INCORRECT

NO.	DATE	ISSUED FOR	BY
0	JUL 2019	BIDDING	HG

SEALS

GEORGIA REGISTERED No. 013444 PROFESSIONAL ENGINEER M. GONZALEZ July 31, 2019

ARCADIS BPA A Joint Venture
2839 Paces Ferry Road
Suite 900
Atlanta, GA 30339
Tel: 770-431-8666
Fax: 770-435-2666
www.arcadis-us.com

ATLANTA, GEORGIA
CITY OF ATLANTA
DEPARTMENT OF WATERSHED MANAGEMENT

EAST AREA WATER QUALITY CONTROL FACILITY IMPROVEMENTS

W.01.02.0085

SHEET TITLE

FILTER BUILDING ELECTRICAL PLAN

DATE:	JULY 2019
PROJECT NO.:	GABPA134
DESIGNED BY:	S. PATEL
DRAWN BY:	C. MARTINI
CHECKED BY:	I. GONZALEZ

SCALE: AS SHOWN

E-020

SHEET 100 OF 150

User: TTHOMAS Spec: AUS-NCSMOD File: I:\ACAD\PROJ\GABPA134 - CSO GROUP 1\BID PACKAGE 2\SHEETS\ELECTRICAL\E-020.DWG Scale: 1:1 SavedDate: 7/23/2019 Time: 17:50 Plot Date: Thomas, Travis; 7/31/2019; 11:06 ; Layout: 100

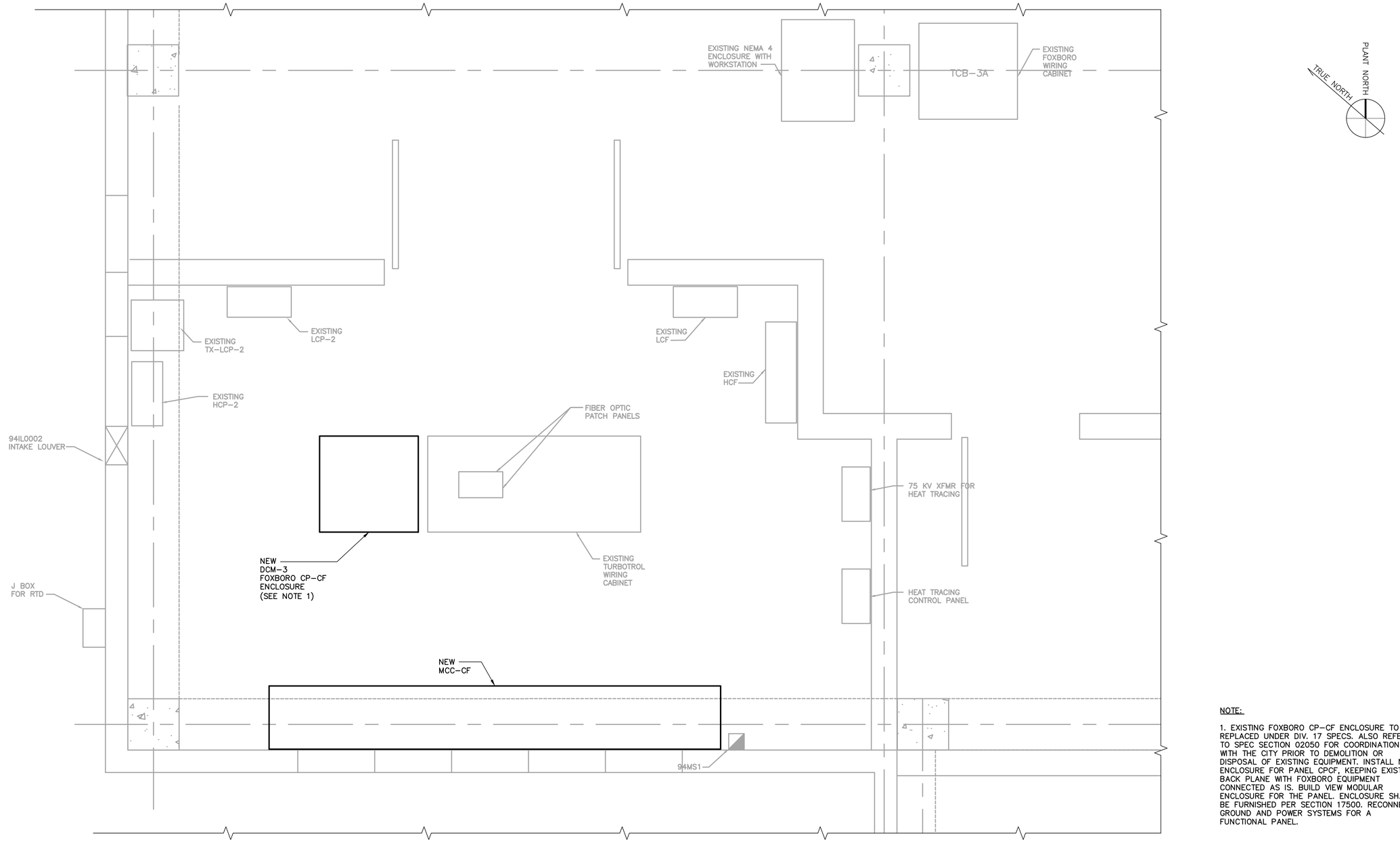

NOTE:

1. EXISTING FOXBORO CP-CF ENCLOSURE TO BE REPLACED UNDER DIV. 17 SPECS. ALSO REFER TO SPEC SECTION 02050 FOR COORDINATION WITH THE CITY PRIOR TO DEMOLITION OR DISPOSAL OF EXISTING EQUIPMENT. INSTALL NEW ENCLOSURE FOR PANEL CPCF, KEEPING EXISTING BACK PLANE WITH FOXBORO EQUIPMENT CONNECTED AS IS. BUILD VIEW MODULAR ENCLOSURE FOR THE PANEL. ENCLOSURE SHALL BE FURNISHED PER SECTION 17500. RECONNECT GROUND AND POWER SYSTEMS FOR A FUNCTIONAL PANEL.

User: TTHOMAS Spec: AUS-NCSM0D File: I: \ACAD\PROJ\GABPA134 - CSO GROUP 1\BID PACKAGE 2\SHEETS\ELECTRICAL\E-021.DWG Scale: 1:1 SavedDate: 7/29/2019 Time: 17:05 Plot Date: Thomas, Travis; 7/31/2019; 11:07 : Layout: 101

COPYRIGHT:
ARCADIS U.S., INC.
2016

IF THIS BAR IS NOT 1" INDICATED SCALE IS INCORRECT

NO.	DATE	ISSUED FOR	BY
0	JUL 2019	BIDDING	HG

SEALS

GEORGIA REGISTERED No. 013444 PROFESSIONAL ENGINEER IVAN M. GONZALEZ July 31, 2019

ARCADIS
BPA
A Joint Venture
2839 Paces Ferry Road
Suite 900
Atlanta, GA 30339
Tel: 770-431-8666
Fax: 770-435-2666
www.arcadis-us.com

ATLANTA, GEORGIA
CITY OF ATLANTA
DEPARTMENT OF WATERSHED MANAGEMENT

EAST AREA WATER QUALITY CONTROL FACILITY IMPROVEMENTS

W.01.02.0085

SHEET TITLE

CHEMICAL BUILDING ELECTRICAL PLAN

DATE:	JULY 2019
PROJECT NO.:	GABPA134
DESIGNED BY:	S. PATEL
DRAWN BY:	J. BROWN
CHECKED BY:	I. GONZALEZ

SCALE: 3/4" = 1'-0"

E-021

SHEET 101 OF 150

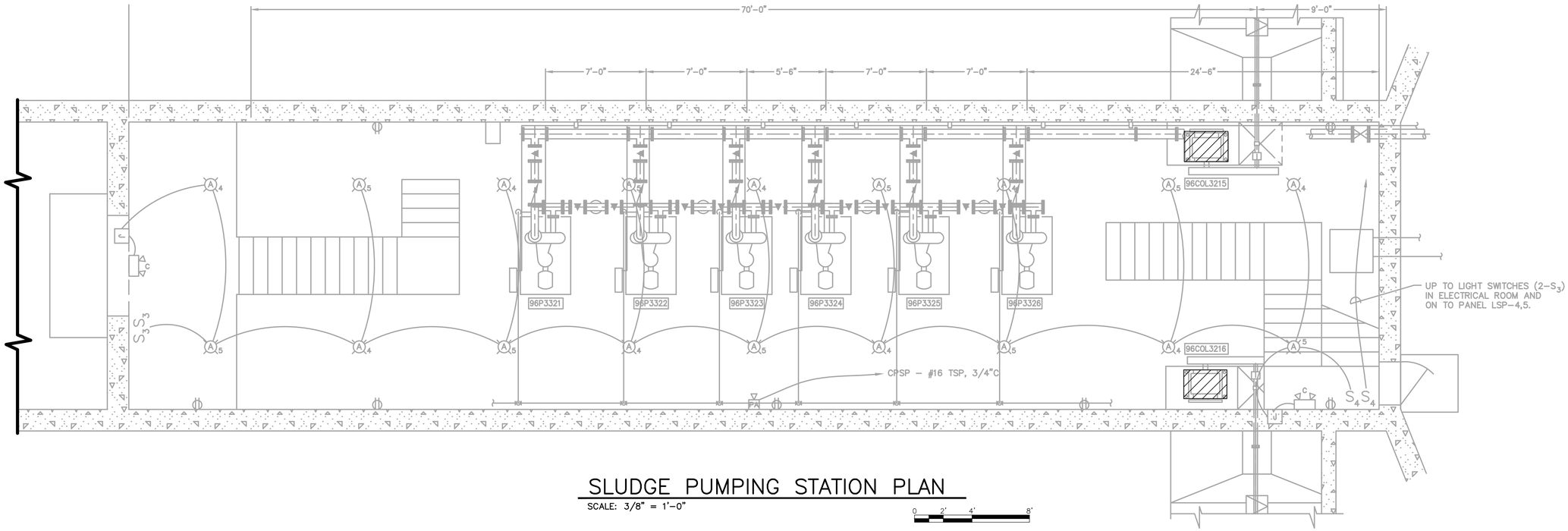

SLUDGE PUMPING STATION PLAN

SCALE: 3/8" = 1'-0"

0 2' 4' 8'

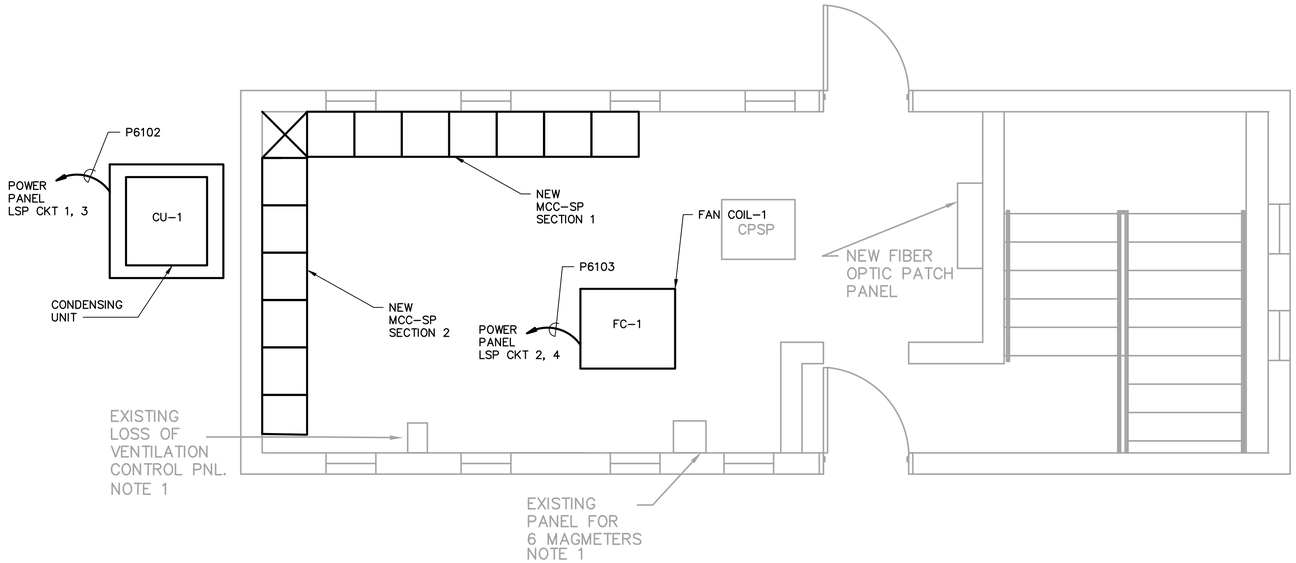

SLUDGE PUMPING STATION ELECTRICAL ROOM

SCALE: 3/8" = 1'-0"

0 2' 4' 6'

COPYRIGHT: ARCADIS U.S., INC. 2016

IF THIS BAR IS NOT 1" INDICATED SCALE IS INCORRECT

NO.	DATE	ISSUED FOR	BY
0	JUL 2019	BIDDING	HG

SEALS

GEORGIA REGISTERED No. 013444 PROFESSIONAL ENGINEER NAN M. GONZALEZ July 31, 2019

ARCADIS BPA A Joint Venture
2839 Paces Ferry Road
Suite 900
Atlanta, GA 30339
Tel: 770-431-8666
Fax: 770-435-2666
www.arcadis-us.com

ATLANTA, GEORGIA
CITY OF ATLANTA
DEPARTMENT OF WATERSHED MANAGEMENT

EAST AREA WATER QUALITY CONTROL FACILITY IMPROVEMENTS

W.01.02.0085

SHEET TITLE

SLUDGE PUMPING STATION ELECTRICAL PLAN

DATE:	JULY 2019
PROJECT NO.:	GABPA134
DESIGNED BY:	S. PATEL
DRAWN BY:	J. BROWN
CHECKED BY:	I. GONZALEZ

SCALE: 3/8" = 1'-0"

E-022

SHEET 102 OF 150

User:TTHOMAS Spec:AUS-NCSMOD File:I:\ACAD\PROJ\GABPA134 - CSO GROUP 1\BID PACKAGE 2\SHEETS\ELECTRICAL\E-022.DWG Scale:1:1 SavedDate:7/30/2019 Time:12:33 Plot Date: Thomas, Travis; 7/31/2019; 11:09 ; Layout:102

NOTES:

1. EXPOSED 4" PIPE TO BE HEAT TRACED. REFER TO E-033 FOR SCHEDULE, TAG # HT-1-1 AND HT-2-1.
2. EXPOSED 8" PIPE TO BE HEAT TRACED. REFER TO E-033 FOR HEAT TRACE SCHEDULE, TAG NUMBER HT-4-1.
3. SED. BASIN 1 TOP PLAN TYP. OF SED. BASIN 2. REFER TO INSTRUMENTATION DRAWINGS FOR DEVICE LOOP NUMBERS.

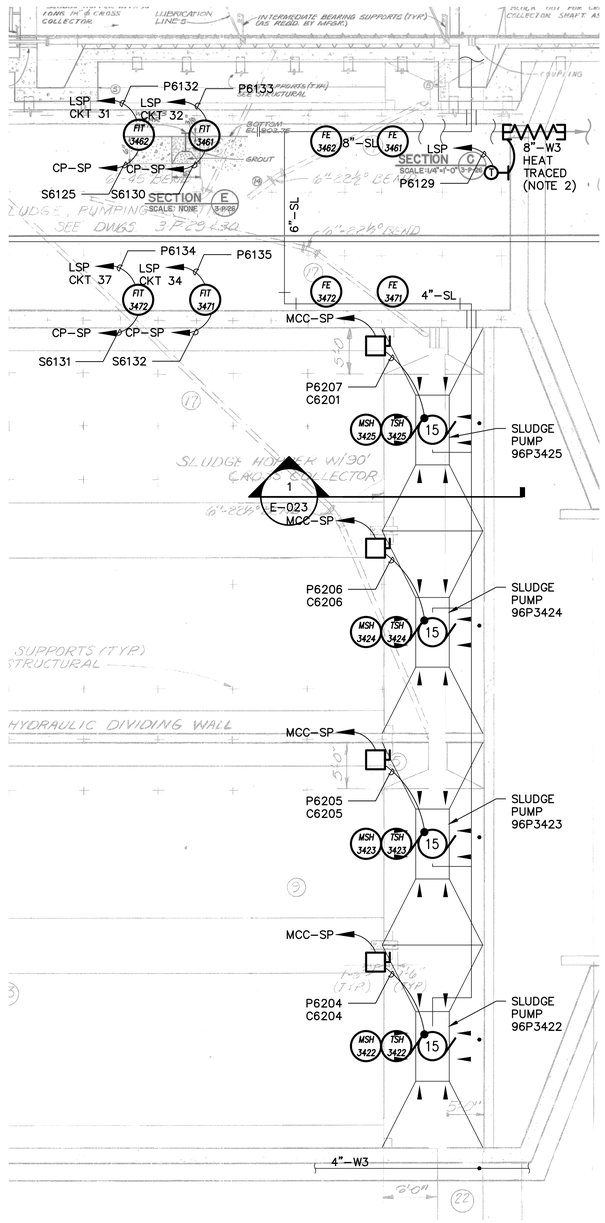

SED. BASIN 1 SLUDGE COLL. SUMPS BOTTOM PLAN

SCALE: 1/8"=1'-0"

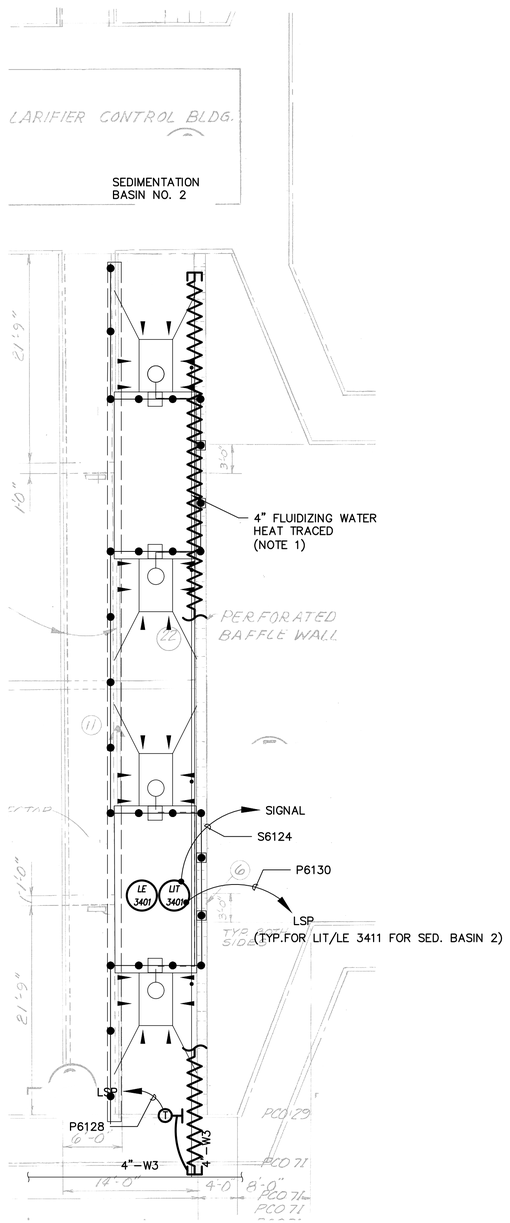

SED. BASIN 1 SLUDGE COLL. SUMPS TOP PLAN (TYP. FOR 2)

SCALE: 1/8"=1'-0"

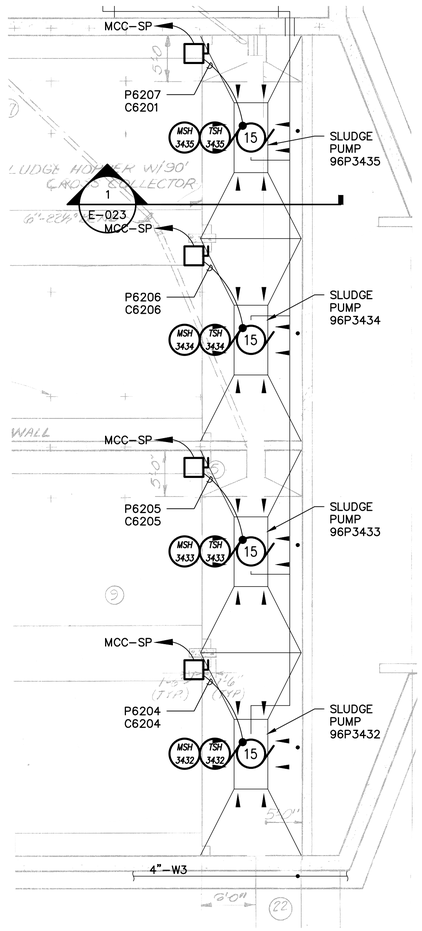

SED. BASIN 2 SLUDGE COLL. SUMPS BOTTOM PLAN

SCALE: 1/8"=1'-0"

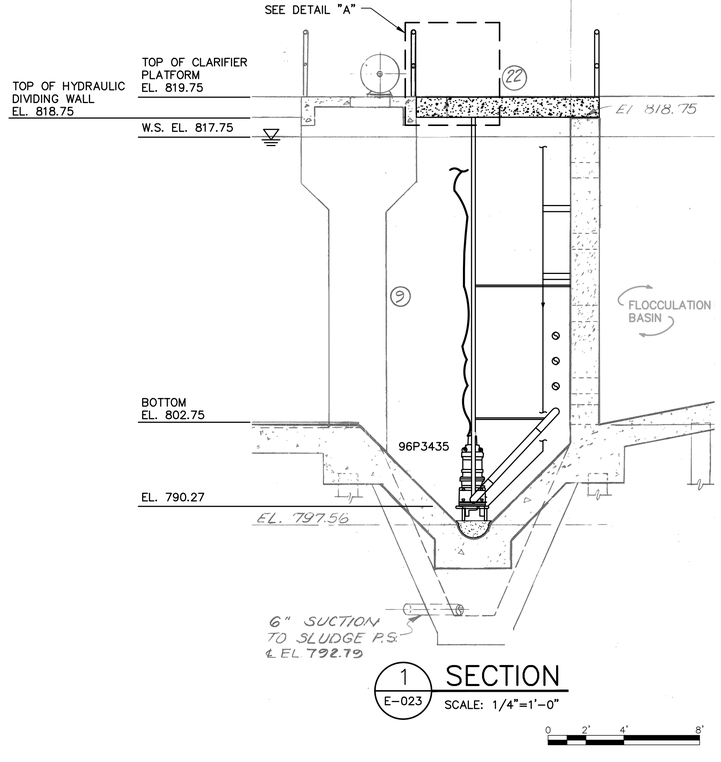

1 SECTION

E-023 SCALE: 1/4"=1'-0"

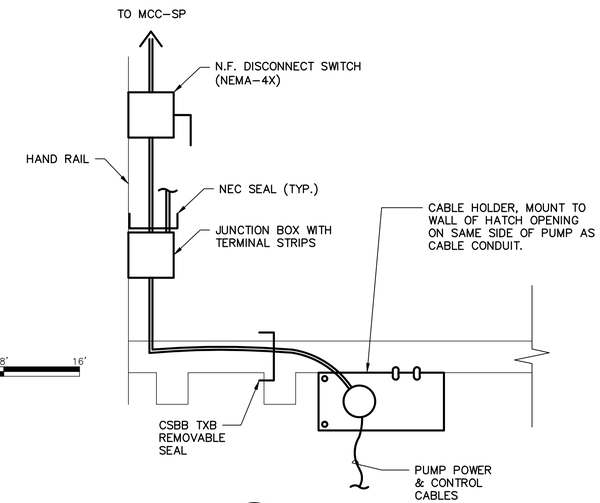

A DETAIL

E-023 SCALE: N.T.S.

COPYRIGHT: ARCADIS U.S., INC. 2016

IF THIS BAR IS NOT 1" INDICATED SCALE IS INCORRECT

NO.	DATE	ISSUED FOR	BY
0	JUL 2019	BIDDING	HG

SEALS

GEORGIA REGISTERED No. 013444 PROFESSIONAL ENGINEER IVAN M. GONZALEZ July 31, 2019

ARCADIS A Joint Venture
BPA
2839 Paces Ferry Road
Suite 900
Atlanta, GA 30339
Tel: 770-431-8666
Fax: 770-435-2666
www.arcadis-us.com

ATLANTA, GEORGIA
CITY OF ATLANTA
DEPARTMENT OF WATERSHED MANAGEMENT

EAST AREA WATER QUALITY CONTROL FACILITY IMPROVEMENTS

W.01.02.0085

SHEET TITLE

SEDIMENTATION BASIN & SLUDGE PUMPING EQUIPMENT, POWER & CONTROLS

DATE:	JULY 2019
PROJECT NO.:	GABPA134
DESIGNED BY:	S. PATEL
DRAWN BY:	J. BROWN
CHECKED BY:	I. GONZALEZ

SCALE: AS SHOWN

E-023

SHEET 103 OF 150

User: TTHOMAS Spec: AUS--NCSMOD File: I:\ACAD\PROJ\GABPA134 - CSO GROUP 1\BID PACKAGE 2\SHEETS\ELECTRICAL\E-023.DWG Scale: 1:1 Saved Date: 7/30/2019 Time: 17:53 Plot Date: Thomas, Travis; 7/31/2019; 11:11 : Layout: 103

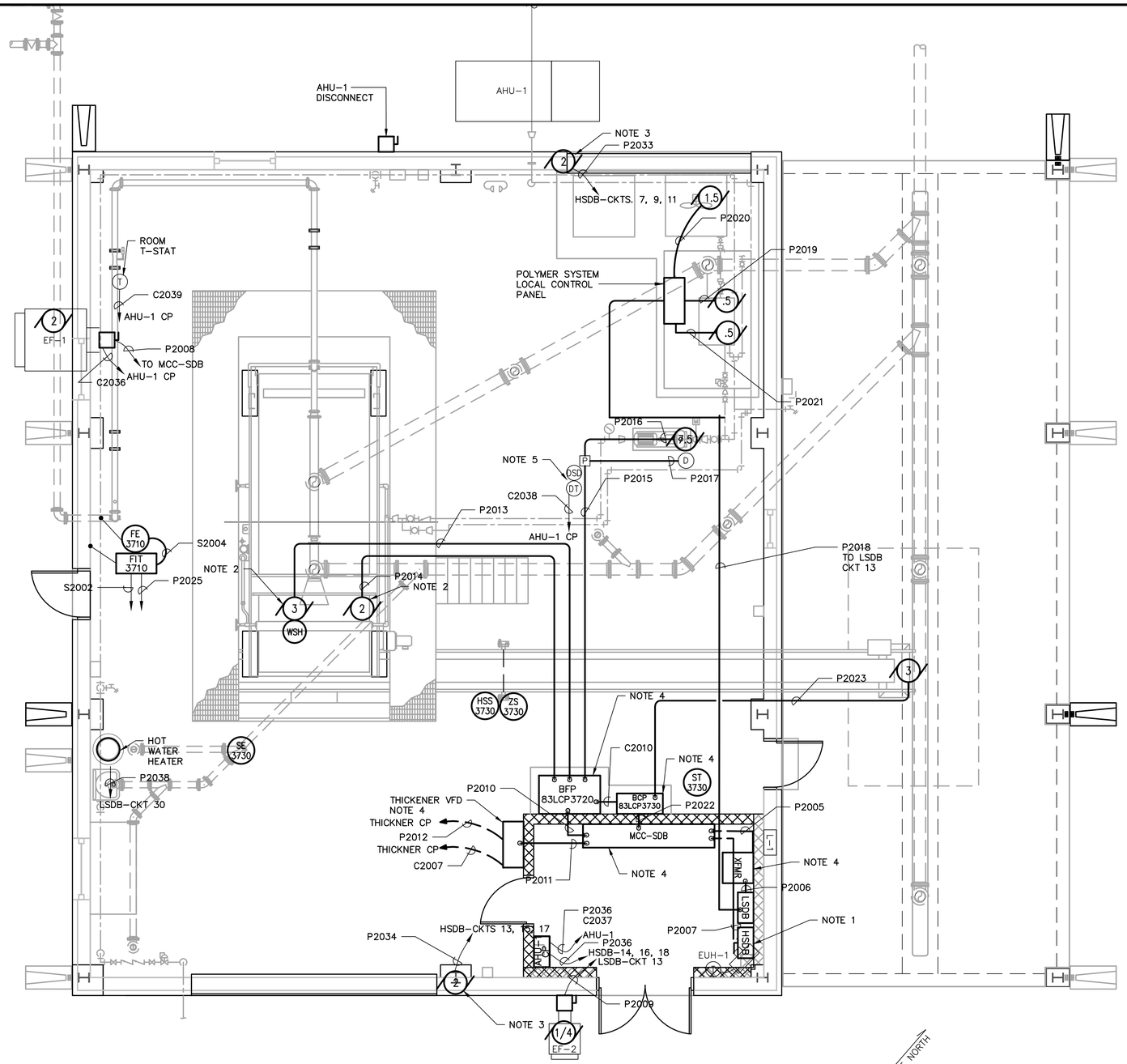

SLUDGE DEWATERING BUILDING

SCALE: 1/4" = 1'-0"

NOTES:

1. ALL ELECTRICAL EQUIPMENT LOCATIONS SHALL BE COORDINATED WITH OTHER DISCIPLINES TO AVOID ANY CONFLICT.
2. MOTOR LOCATED ABOVE FINISHED FLOOR (ON TOP OF BELT FILTER PRESS).
3. MOTOR LOCATED ABOVE FINISHED FLOOR (ON TOP OF ROLL UP DOOR).
4. GROUND MOUNTED CABINETS/ENCLOSURES MUST BE MOUNTED ON A 4" THICK CONCRETE PAD.
5. DUCT THERMOSTAT DUCT SMOKE DETECTOR TO BE PLACED IN AHU-1 AIR DUCT. SEE HP-002.
6. THE CONTRACTOR SHALL PROVIDE CONDUIT AND WIRING FOR HVAC CONTROL CIRCUITS AS REQUIRED IN COORDINATION WITH EQUIPMENT PROVIDED.
7. ZS: MOTION SWITCH, HSS: PULL CORD, SE: ZERO MOTION, ST: SIGNED TRANSMITTER.
8. COORDINATE LOCATIONS OF DEVICES WITH VENDOR SHOP DRAWINGS.

COPYRIGHT: ARCADIS U.S., INC. 2016

IF THIS BAR IS NOT 1" INDICATED SCALE IS INCORRECT

NO.	DATE	ISSUED FOR	BY
0	JUL 2019	BIDDING	HG

SEALS

GEORGIA REGISTERED No. 013444 PROFESSIONAL ENGINEER IVAN M. GONZALEZ July 31, 2019

ARCADIS A Joint Venture
BPA
2839 Paces Ferry Road
Suite 900
Atlanta, GA 30339
Tel: 770-431-8666
Fax: 770-435-2666
www.arcadis-us.com

ATLANTA, GEORGIA
CITY OF ATLANTA
DEPARTMENT OF WATERSHED MANAGEMENT

EAST AREA WATER QUALITY CONTROL FACILITY IMPROVEMENTS

W.01.02.0085

SHEET TITLE

SLUDGE DEWATERING BUILDING POWER AND CONTROL

DATE:	JULY 2019
PROJECT NO.:	GABPA134
DESIGNED BY:	S. PATEL
DRAWN BY:	C. MARTINI
CHECKED BY:	I. GONZALEZ

SCALE: 1/4" = 1'-0"

E-024

SHEET 104 OF 150

User: TTHOMAS Spec: AUS-NCSMOD File: I:\ACAD\PROJ\GABPA134 - CSO GROUP 1\BID PACKAGE 2\SHEETS\ELECTRICAL\E-024.DWG Scale: 1:1 SavedDate: 7/30/2019 Time: 17:53 Plot Date: Thomas, Travis; 7/31/2019; 11:13 : Layout:104

User:THOMAS Spec:AUS-NCSMOD File:I:\ACAD\PROJ\GABPA134 - CSO GROUP 1\BID PACKAGE 2\SHEETS\ELECTRICAL\E-025.DWG Scale:1:1 SavedDate:2/25/2019 Time:17:02 Plot Date: Thomas, Travis; 7/31/2019; 11:15 ; Layout:105

LUMINAIRE SCHEDULE

TYPE	QTY	DESCRIPTION	MOUNTING		LAMPS			VOLTAGE	POWER DRAW		DESIGN BASIS MANUFACTURER / CATALOG NO.	REMARKS
			TYPE	HEIGHT (FT.)	QUANTITY	WATTS-EA	TYPE		TOTAL WATTAGE	TOTAL VA		
A	8	CONFIGURED FROM CREE EDGE AREA, TYPE III MEDIUM, 60 LEDs, 700mA, 4000K	SURFACE	20	40	68		120	544	680	CREE INC. / CAN-EDG-3M-**-04-E-525-40K	SEE NOTE 1
B	7	LED LIGHT FIXTURE	PENDANT	SEE NOTE 2	1	60.6		120	424.2	530.25	EG3-4-S-LED-HO-CW-UE	SEE NOTE 1
BE	6	LED LIGHT FIXTURE	PENDANT	SEE NOTE 2	1	60.6		120	363.6	454.5	EG3-4-S-LED-HO-CW-UE	SAME AS "B" WITH EMERGENCY OPTION, SEE NOTE 1
C3	3	EXIT LIGHTING	SURFACE	8' ABOVE DOOR	1	12	HALOGEN	120	36	45	LHXC	
D	2	WALLPACK	SURFACE	8' ABOVE DOOR	2	94	FLUORESCENT	120	188	235	TWH 70S	

NOTES:

1. COORDINATE FIXTURE LOCATION WITH EXHAUST FANS, HEATING SYSTEMS, CONVEYOR HEIGHT. ADJUST LOCATION AS REQUIRED.
2. MOUNT FIXTURE AS HIGH AS POSSIBLE BELOW ROOF.

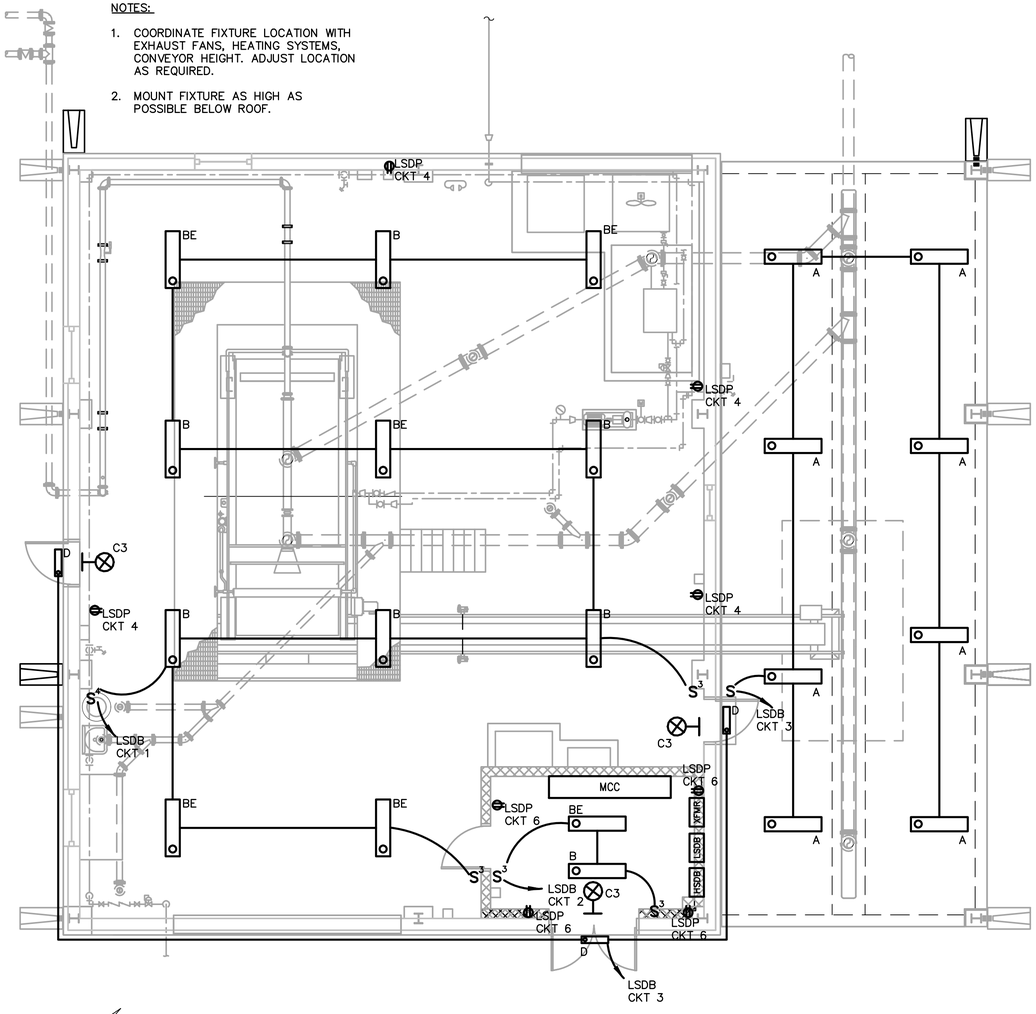

TRUE NORTH
PLANT NORTH

PROPOSED LIGHTING AND RECEPTACLES PLAN

SCALE: 3/16" = 1'-0"

0 4' 8' 12'

LIGHTNING PROTECTION SYSTEM NOTES

1. THE COMPLETED INSTALLATION SHALL MEET THE "INSTALLATION REQUIREMENTS FOR LIGHTNING PROTECTION SYSTEMS, UL96A" OF UNDERWRITERS LABORATORIES – LATEST EDITION. THE UL MASTER LABEL SHALL BE FURNISHED TO THE OWNER UPON COMPLETION.
2. METAL BODIES WITHIN 6' OF THE LIGHTNING PROTECTION SYSTEM SHALL BE BONDED TO THE SYSTEM IN ACCORDANCE WITH UL96A – LATEST REQUIREMENTS.
3. UNDERGROUND METALLIC PIPING ENTERING THE BUILDING SHALL BE BONDED TO THE NEAREST DOWN CONDUCTOR OR GROUND ELECTRODE.
4. AIR TERMINALS SHALL BE LOCATED ON THE ROOF TOP EQUIPMENT AS REQUIRED. IF THE METAL THICKNESS OF AN OBJECT IS 3/16" OR GREATER, AIR TERMINALS MAY BE ELIMINATED IF THE OBJECT IS PROPERLY CONNECTED TO THE SYSTEM.
5. ROOF TOP EQUIPMENT NOT SHOWN ON THIS DRAWING SHALL BE PROTECTED AS REQUIRED TO MEET THE REQUIREMENTS LISTED ABOVE INCLUDING THE INSTALLATION OF AIR TERMINALS AND OR BONDING. IF THE METAL THICKNESS OF AN OBJECT IS 3/16 OR GREATER, AIR TERMINALS MAY BE ELIMINATED IF THE OBJECT IS PROPERLY CONNECTED TO THE SYSTEM.
6. ALL LIGHTNING CONDUCTORS ARE TO MAINTAIN A HORIZONTAL OR DOWNWARD PATH. ALL BENDS IN THE CONDUCTOR SHALL HAVE A RADIUS BEND OF 8" OR GREATER.

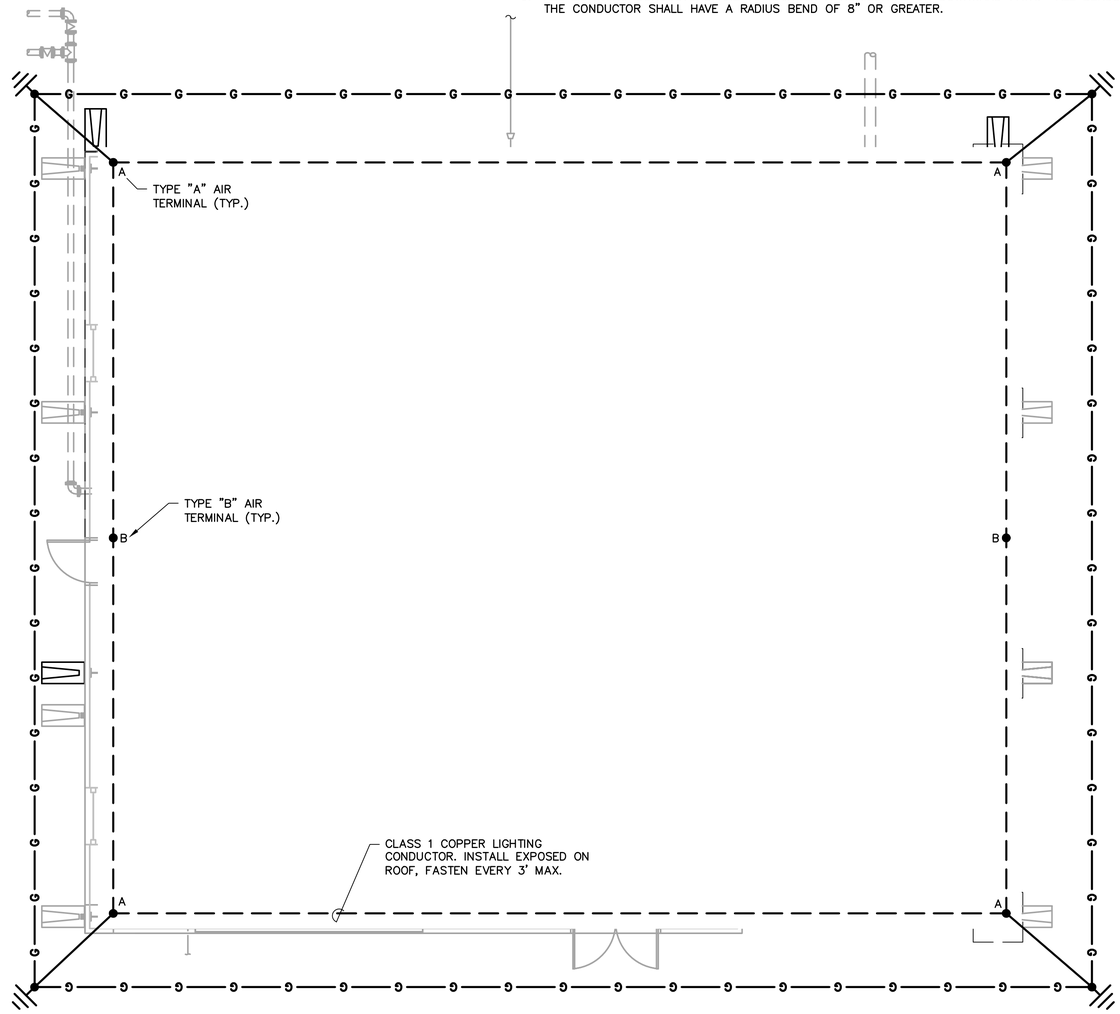

TRUE NORTH
PLANT NORTH

PROPOSED LIGHTNING PROTECTION SYSTEM

SCALE: 3/16" = 1'-0"

0 4' 8' 12'

COPYRIGHT: ARCADIS U.S., INC. 2016

IF THIS BAR IS NOT 1" INDICATED SCALE IS INCORRECT

NO.	DATE	ISSUED FOR	BY
0	JUL 2019	BIDDING	HG

SEALS

GEORGIA REGISTERED No. 013444 PROFESSIONAL ENGINEER IVAN M. GONZALEZ July 31, 2019

ARCADIS A Joint Venture
BPA
2839 Paces Ferry Road
Suite 900
Atlanta, GA 30339
Tel: 770-431-8666
Fax: 770-435-2666
www.arcadis-us.com

RESURGENS 1901 ATLANTA, GA 2001

ATLANTA, GEORGIA
CITY OF ATLANTA
DEPARTMENT OF WATERSHED MANAGEMENT

EAST AREA WATER QUALITY CONTROL FACILITY IMPROVEMENTS

W.01.02.0085

SHEET TITLE

SLUDGE DEWATERING BUILDING ELEC LIGHTING AND PROTECTION

DATE:	JULY 2019
PROJECT NO.:	GABPA134
DESIGNED BY:	S. PATEL
DRAWN BY:	C. MARTINI
CHECKED BY:	I. GONZALEZ

SCALE: 3/16" = 1'-0"

E-025

SHEET 105 OF 150

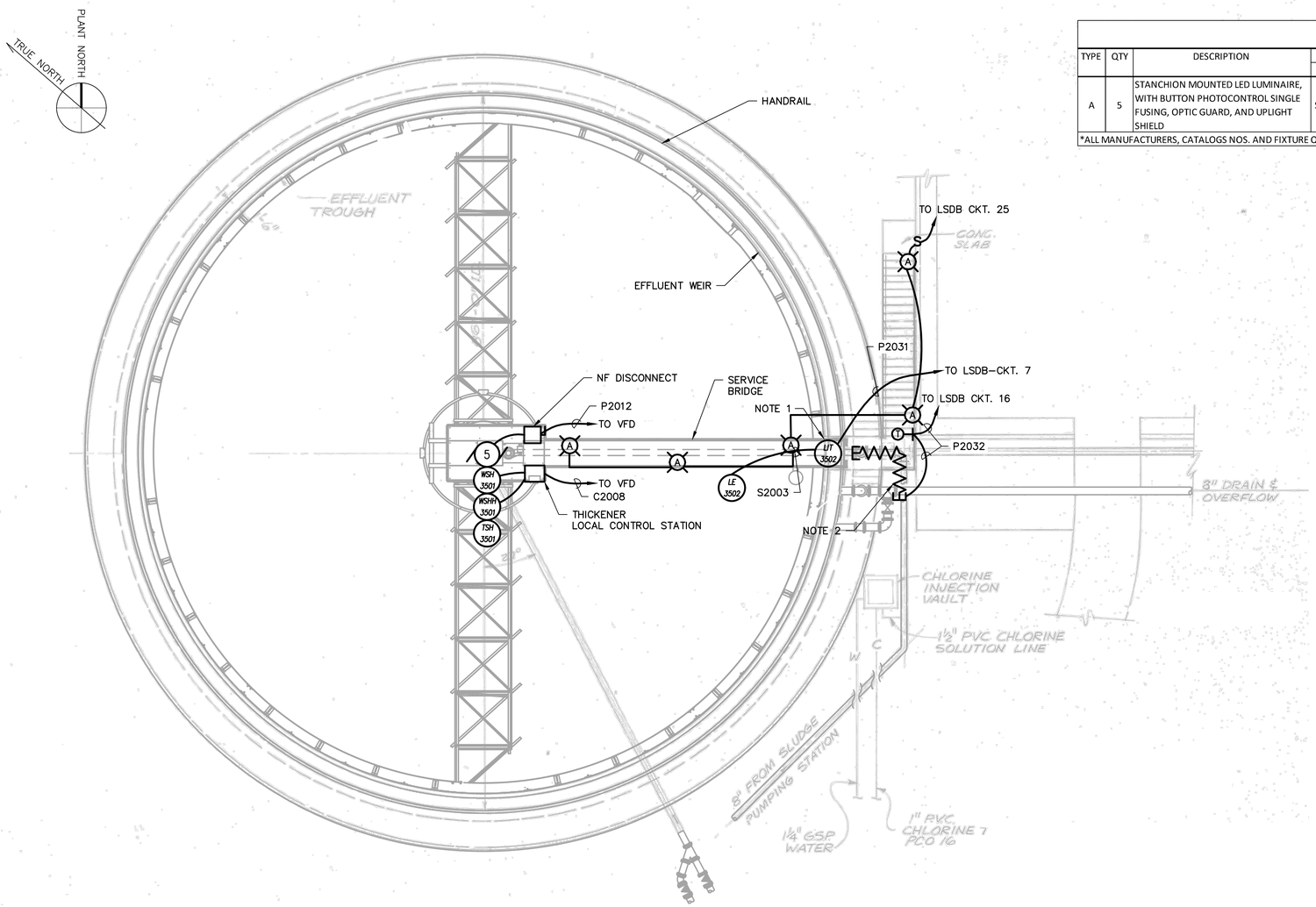

SLUDGE HOLDING TANK PLAN

SCALE: 1/8" = 1'-0"

0 4' 8' 16'

LUMINAIRE SCHEDULE

TYPE	QTY	DESCRIPTION	MOUNTING		LAMPS			VOLTAGE	POWER DRAW		DESIGN BASIS MANUFACTURER / CATALOG NO.	REMARKS
			TYPE	HEIGHT (FT.)	QUANTITY	WATTS-EA	TYPE		TOTAL WATTAGE	TOTAL VA		
A	5	STANCHION MOUNTED LED LUMINAIRE, WITH BUTTON PHOTOCONTROL SINGLE FUSING, OPTIC GUARD, AND UPLIGHT SHIELD	STANCHION	8	1	68	LED	120	340	425	HOLOPHANE, PETROLUX / PLED2-05L-**-AS-P3US-NA-**-**-BP-F1-GD-SH	

*ALL MANUFACTURERS, CATALOGS NOS. AND FIXTURE QUANTITIES ARE SUBJECT TO BE EVALUATED AS EQUAL TO OTHER COMPETITIVE BRANDS.

NOTES:

1. REPLACE EXISTING LIT. CONNECT TO EXISTING CONDUIT/WIRE.
2. 8" SLUDGE LINE TO BE HEAT TRACED. REFER TO E-033 FOR HEAT TRACE SCHEDULE.
3. REFER TO E-043 FOR TANK LUMINARIES DETAIL.

COPYRIGHT: ARCADIS U.S., INC. 2016

IF THIS BAR IS NOT 1" INDICATED SCALE IS INCORRECT

NO.	DATE	ISSUED FOR	BY
0	JUL 2019	BIDDING	HG

SEALS

GEORGIA REGISTERED No. 013444 PROFESSIONAL ENGINEER IVAN M. GONZALEZ July 31, 2019

ARCADIS A Joint Venture
BPA
2839 Paces Ferry Road
Suite 900
Atlanta, GA 30339
Tel: 770-431-8666
Fax: 770-435-2666
www.arcadis-us.com

ATLANTA, GEORGIA
CITY OF ATLANTA
DEPARTMENT OF WATERSHED MANAGEMENT

EAST AREA WATER QUALITY CONTROL FACILITY IMPROVEMENTS

W.01.02.0085

SHEET TITLE

SLUDGE HOLDING TANK POWER AND CONTROL PLAN

DATE: JULY 2019
PROJECT NO.: GABPA134
DESIGNED BY: S. PATEL
DRAWN BY: R. KUNZ
CHECKED BY: I. GONZALEZ

SCALE: 1/8" = 1'-0"

E-026

SHEET 106 OF 150

User: TTHOMAS Spec: AUS-NCSMOD File: I:\ACAD\PROJ\GABPA134 - CSO GROUP 1\BID PACKAGE 2\SHEETS\ELECTRICAL\E-026.DWG Scale:1:1 SavedDate:2/25/2019 Time:18:23 Plot Date: Thomas, Travis; 7/31/2019; 11:17 ; Layout:106

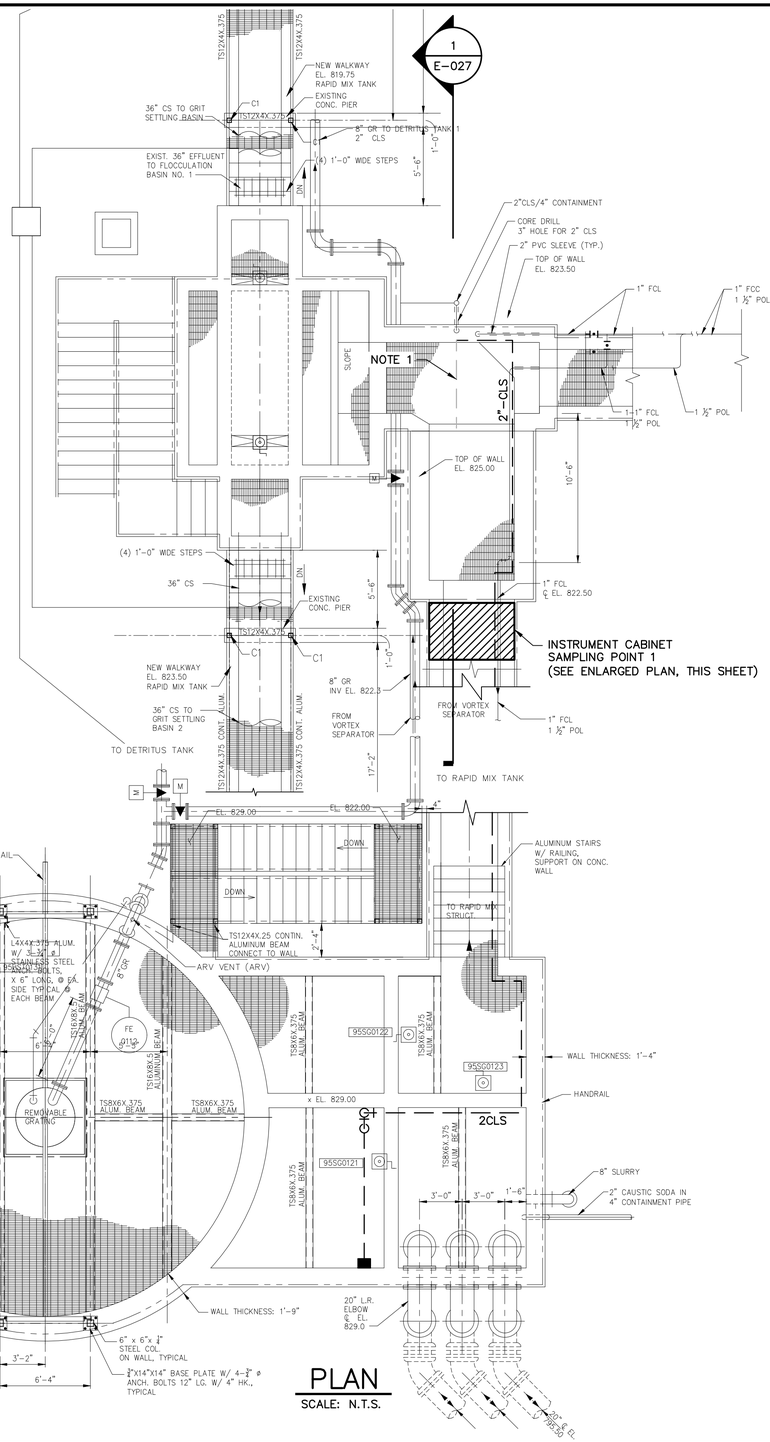

PLAN
SCALE: N.T.S.

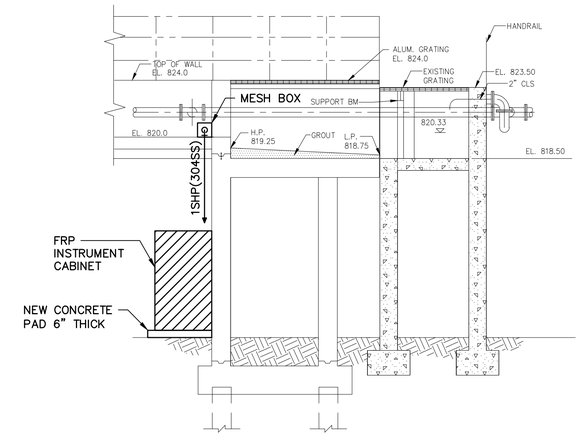

1 E-027 **SECTION**
SCALE: 3/16" = 1'-0"

0 4' 8' 12'

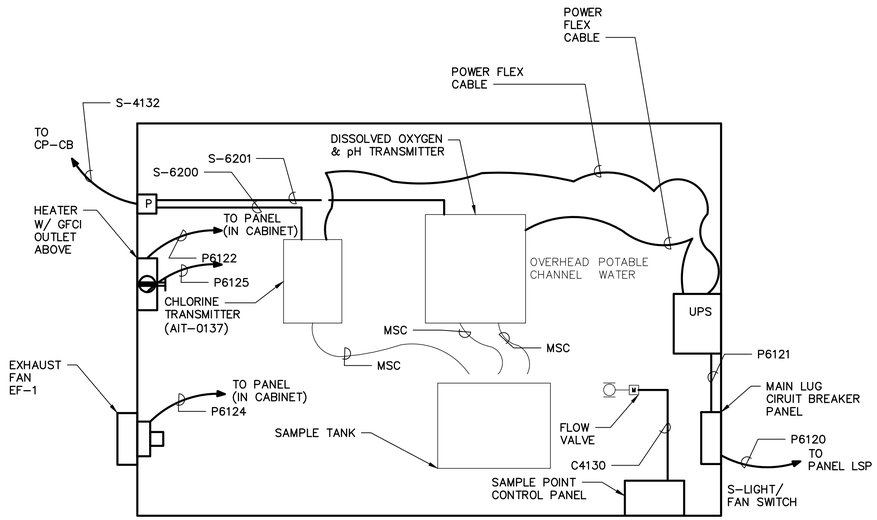

A E-027 **PLAN: SAMPLING POINT 1**
SCALE: N.T.S.

NOTE:

1. REFER TO WIRING SCHEMATIC FOR DETAILS. SHEET E-032.
2. M.L.O -MAINS LUGS ONLY.

REFERENCE DRAWINGS: S-14, M-14, M-15, M-16, M-17 (2008, CITY OF ATLANTA INTRENCHMENT CREEK CS TREATMENT PLANT

COPYRIGHT:
ARCADIS U.S., INC.
2016

IF THIS BAR IS NOT 1" INDICATED SCALE IS INCORRECT

NO.	DATE	ISSUED FOR	BY
0	JUL 2019	BIDDING	HG

SEALS

GEORGIA REGISTERED No. 013444 PROFESSIONAL ENGINEER IVANM. GONZALEZ July 31, 2019

ARCADIS
BPA
A Joint Venture
2839 Paces Ferry Road
Suite 900
Atlanta, GA 30339
Tel: 770-431-8666
Fax: 770-435-2666
www.arcadis-us.com

RESURGENS 1870 ATLANTA,GA. 1961

ATLANTA, GEORGIA
CITY OF ATLANTA
DEPARTMENT OF WATERSHED MANAGEMENT

EAST AREA WATER QUALITY CONTROL FACILITY IMPROVEMENTS

W.01.02.0085

SHEET TITLE

SODIUM HYPOCHLORITE DOSING AND SAMPLING POINT POWER PLAN

DATE:	JULY 2019
PROJECT NO.:	GABPA134
DESIGNED BY:	S. PATEL
DRAWN BY:	J. BROWN
CHECKED BY:	I. GONZALEZ

SCALE: AS SHOWN

E-027

SHEET 107 OF 150

User: TTHOMAS Spec: AUS-NCSMOD File: I:\ACAD\PROJ\GABPA134 - CSO GROUP 1\BID PACKAGE 2\SHEETS\ELECTRICAL\E-027.DWG Scale: 1:1 SavedDate: 2/26/2019 Time: 19:52 Plot Date: Thomas, Travis; 7/31/2019; 12:20 ; Layout:107

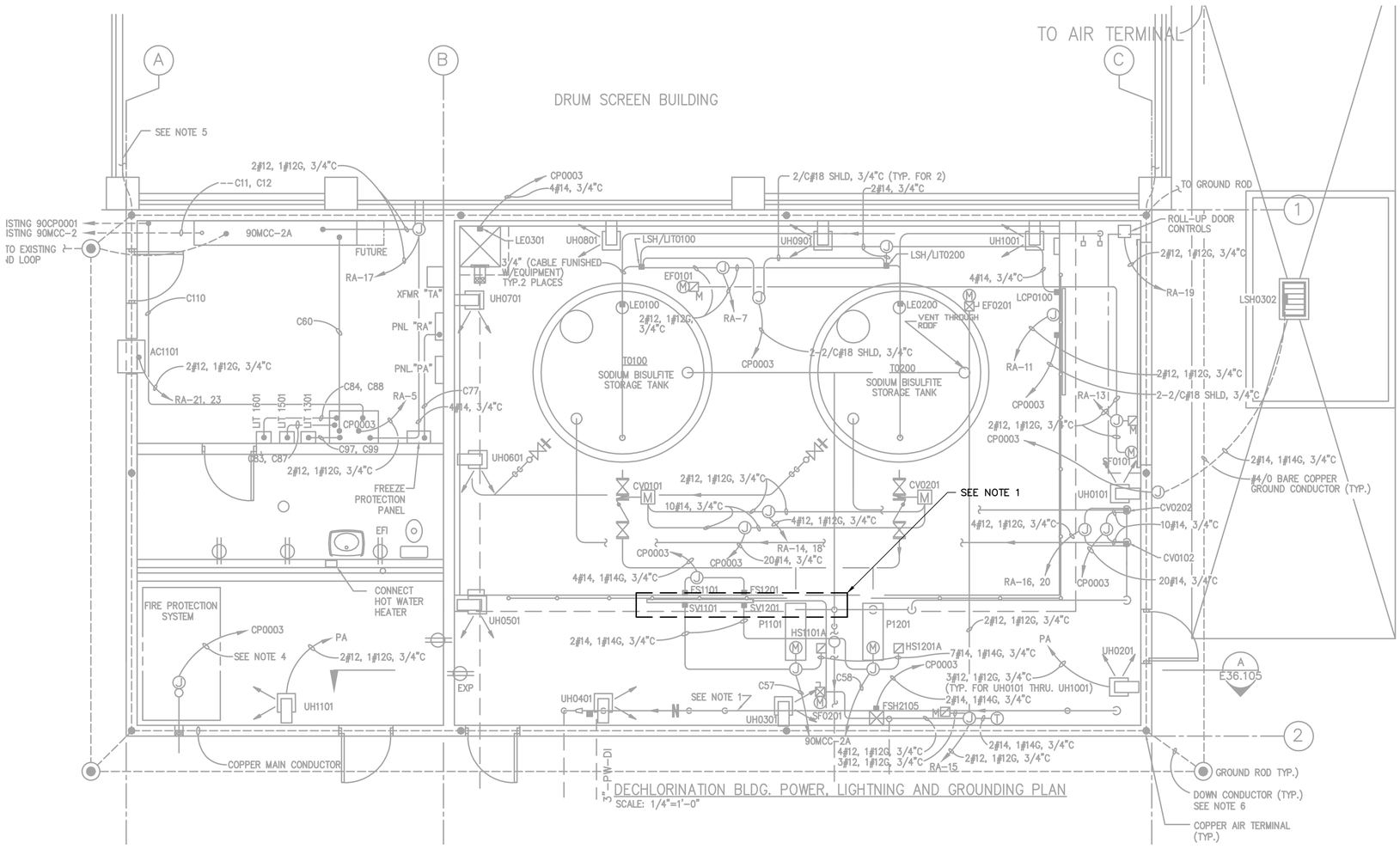

DECHLORINATION BLDG. POWER, LIGHTNING AND GROUNDING PLAN

SCALE: 1/4"=1'-0"

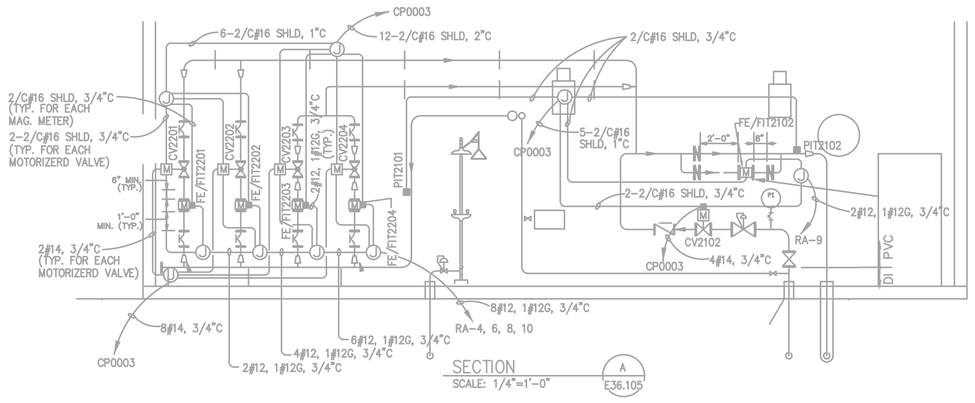

SECTION

SCALE: 1/4"=1'-0"

A E36.105

NOTES:
1. DISCONNECT EXISTING WIRING FOR SV1101 AND SV1201. RECONNECT TO NEW SV1101 AND SV1201 USING EXISTING WIRING.

COPYRIGHT: ARCADIS U.S., INC. 2016

IF THIS BAR IS NOT 1" INDICATED SCALE IS INCORRECT

NO.	DATE	ISSUED FOR	BY
0	JUL 2019	BIDDING	HG

SEALS

GEORGIA REGISTERED No. 013444 PROFESSIONAL ENGINEER IVAN M. GONZALEZ July 31, 2019

ARCADIS A Joint Venture
BPA
2839 Paces Ferry Road
Suite 900
Atlanta, GA 30339
Tel: 770-431-8666
Fax: 770-435-2666
www.arcadis-us.com

RESURGENS 1901 ATLANTA, GA 2001

ATLANTA, GEORGIA
CITY OF ATLANTA
DEPARTMENT OF WATERSHED MANAGEMENT

EAST AREA WATER QUALITY CONTROL FACILITY IMPROVEMENTS

W.01.02.0085

SHEET TITLE

CUSTER AVENUE – POWER & LIGHTING PLAN CHEMICAL STORAGE

DATE:	JULY 2019
PROJECT NO.:	GABPA134
DESIGNED BY:	S. PATEL
DRAWN BY:	J. BROWN
CHECKED BY:	I. GONZALEZ

SCALE: 1/4" = 1'-0"

E-028

SHEET 108 OF 150

User:THOMAS Spec:AUS-NCSMOD File:I:\ACAD\PROJ\GABPA134 – CSO GROUP 1\BID PACKAGE 2\SHEETS\ELECTRICAL\E-028.DWG Scale:1:1 SavedDate:3/28/2019 Time:13:29 Plot Date: Thomas, Travis; 7/31/2019; 11:22 ; Layout:108

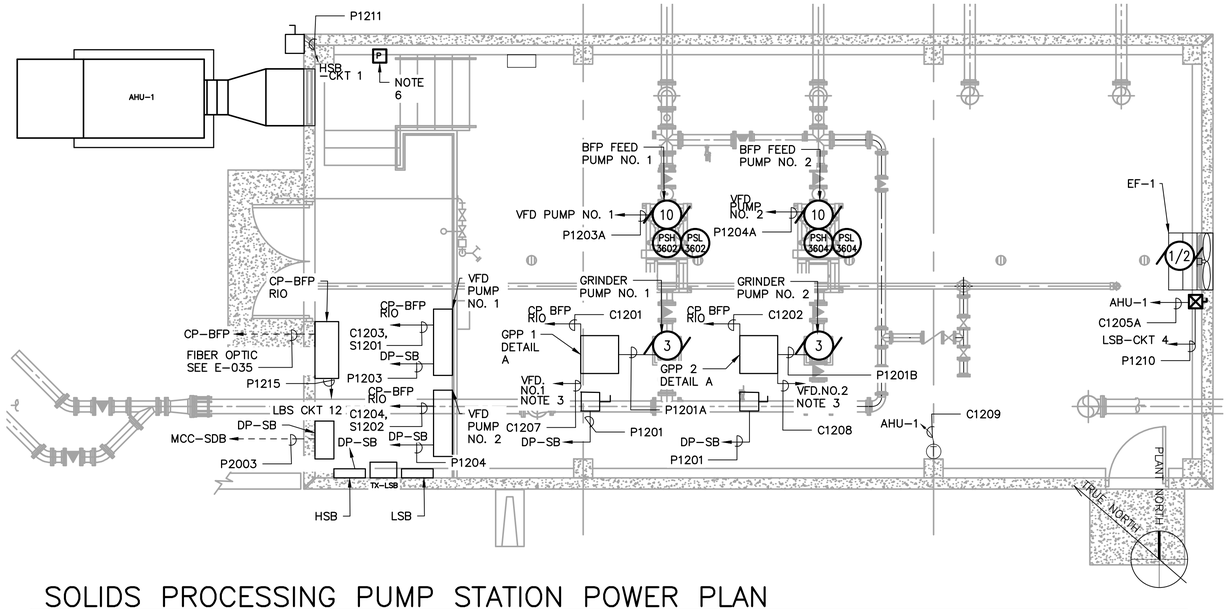

SOLIDS PROCESSING PUMP STATION POWER PLAN

SCALE: 1/4" = 1'-0"

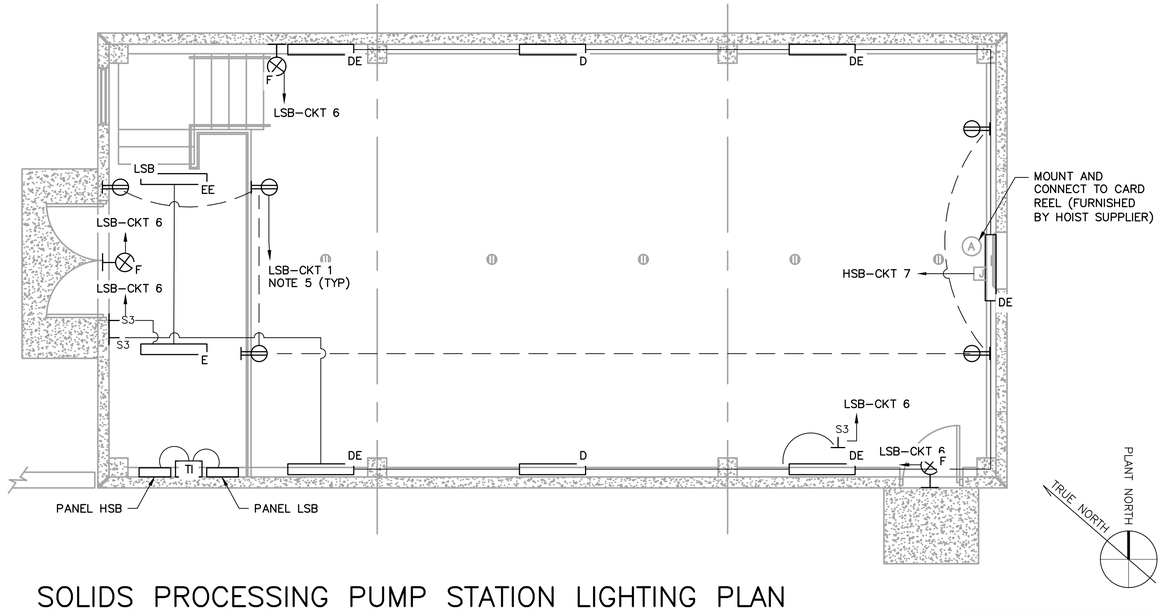

SOLIDS PROCESSING PUMP STATION LIGHTING PLAN

SCALE: 1/4" = 1'-0"

NOTES:
1. REFER TO INTERCONNECTION DIAGRAM SHEET E-034 FOR ADDITIONAL WIRING INFORMATION. REFER TO CONDUIT SCHEDULE SHEET E-042
2. CONTRACT TO FIELD VERIFY ALL EXISTING CONDUIT CONNECTIONS, AND PERFORM INSPECTION OF ALL EXISTING CONDUIT.
3. INTERLOCK W/ VFD CONTROL. SEE SHEET I-018.
4. REFER TO SLUDGE DEWATERING BUILDING.
5. PROVIDE NEW OUTLETS, UTILIZE EXISTING CONDUIT.
6. PULL BOX IS INTENDED TO REROUTE ALL EXISTING CONDUIT & WIRING FROM THE DELETED LSB PANEL TO THE RELOCATED LSB PANEL. CONTRACTOR SHALL TEST EXISTING CONDUIT FOR CONTINUITY AND INTEGRITY, BEFORE REWIRING LOADS TO THEIR END DESTINATION.

LUMINAIRE SCHEDULE

TYPE	QTY	DESCRIPTION	MOUNTING		LAMPS			VOLTAGE	POWER DRAW		DESIGN BASIS MANUFACTURER / CATALOG NO.	REMARKS
			TYPE	HEIGHT(FT.)	QUANTITY	WATTS-EA	TYPE		TOTAL WATTAGE	TOTAL VA		
D	2	FAILSAFE HVSL 4' LED FIXTURE WITH A OPAL LENS	WALL	10	1	44.2	LED	120	88.4	110.5	EATON - FAIL-SAFE (FORMER COOPER LIGHTING) / HVSL4-4-LD4-1HI-40-UNC-O-ED1C	
DE	5	FAILSAFE HVSL 4' LED FIXTURE WITH A OPAL LENS	WALL	10	1	44.2	LED	120	221	276.3	EATON - FAIL-SAFE (FORMER COOPER LIGHTING) / HVSL4-4-LD4-1HI-40-UNC-O-ED1C-EL7W	SAME AS "D" WITH EMERGENCY OPTION
E	1	FAILSAFE HVSL 4' LED FIXTURE WITH A OPAL LENS	PENDANT	10*	1	44.2	LED	120	44.2	55.25	EATON - FAIL-SAFE (FORMER COOPER LIGHTING) / HVSL4-4-LD4-1HI-40-UNC-O-ED1C-PMSC	
EE	1	FAILSAFE HVSL 4' LED FIXTURE WITH A OPAL LENS	PENDANT	10*	1	44.2	LED	120	44.2	55.25	EATON - FAIL-SAFE (FORMER COOPER LIGHTING) / HVSL4-4-LD4-1HI-40-UNC-O-ED1C-EL7W/PMSC	SAME AS "E" WITH EMERGENCY OPTION
F	3	MAGELLAN MEX	SURFACE	10	1	0.81	LED	120	2.43	3	MEX S 1 R SD	

*ALL MANUFACTURERS, CATALOGS NOS. AND FIXTURE QUANTITIES ARE SUBJECT TO BE EVALUATED AS EQUAL TO OTHER COMPETITIVE BRANDS. HEIGHT IS NOTED ABOVE FINISHED FLOOR SURFACE. *HEIGHT ABOVE MEZZANINE

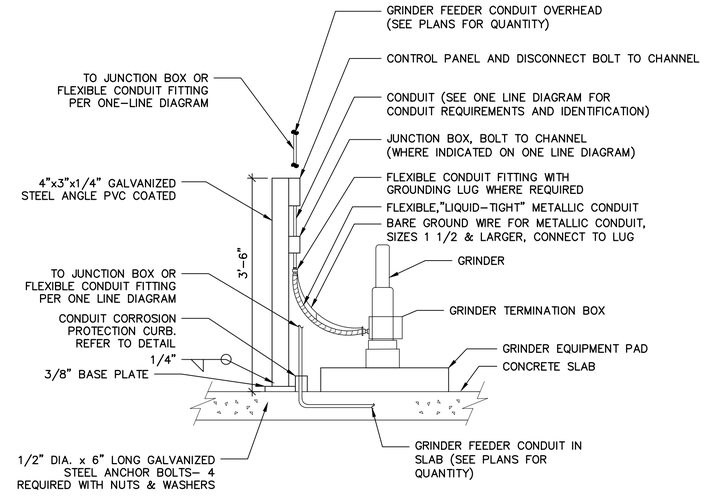

GRINDER TERMINATION AND DEVICE MOUNTING DETAIL

A / E-029

(NTS)

COPYRIGHT: ARCADIS U.S., INC. 2016

IF THIS BAR IS NOT 1" INDICATED SCALE IS INCORRECT

NO.	DATE	ISSUED FOR	BY
0	JUL 2019	BIDDING	HG

SEALS

GEORGIA REGISTERED No. 013444 PROFESSIONAL ENGINEER IVAN M. GONZALEZ July 31, 2019

ARCADIS BPA A Joint Venture
2839 Paces Ferry Road
Suite 900
Atlanta, GA 30339
Tel: 770-431-8666
Fax: 770-435-2666
www.arcadis-us.com

ATLANTA, GEORGIA
CITY OF ATLANTA
DEPARTMENT OF WATERSHED MANAGEMENT

EAST AREA WATER QUALITY CONTROL FACILITY IMPROVEMENTS

W.01.02.0085

SHEET TITLE

SOLIDS PROCESSING BUILDING POWER AND CONTROL

DATE: JULY 2019
PROJECT NO.: GABPA134
DESIGNED BY: C. ATKINS
DRAWN BY: R. KUNZ
CHECKED BY: I. GONZALEZ

SCALE: 1/4" = 1'-0"

E-029

SHEET 109 OF 150

User:TTHOMAS Spec:AUS-NCSMOD File:I:\ACAD\PROJ\GABPA134 - CSO GROUP 1\BID PACKAGE 2\SHEETS\ELECTRICAL\E-029.DWG Scale:1:1 SavedDate:7/30/2019 Time:17:53 Plot Date: Thomas, Travis; 7/31/2019; 11:24 ; Layout:109

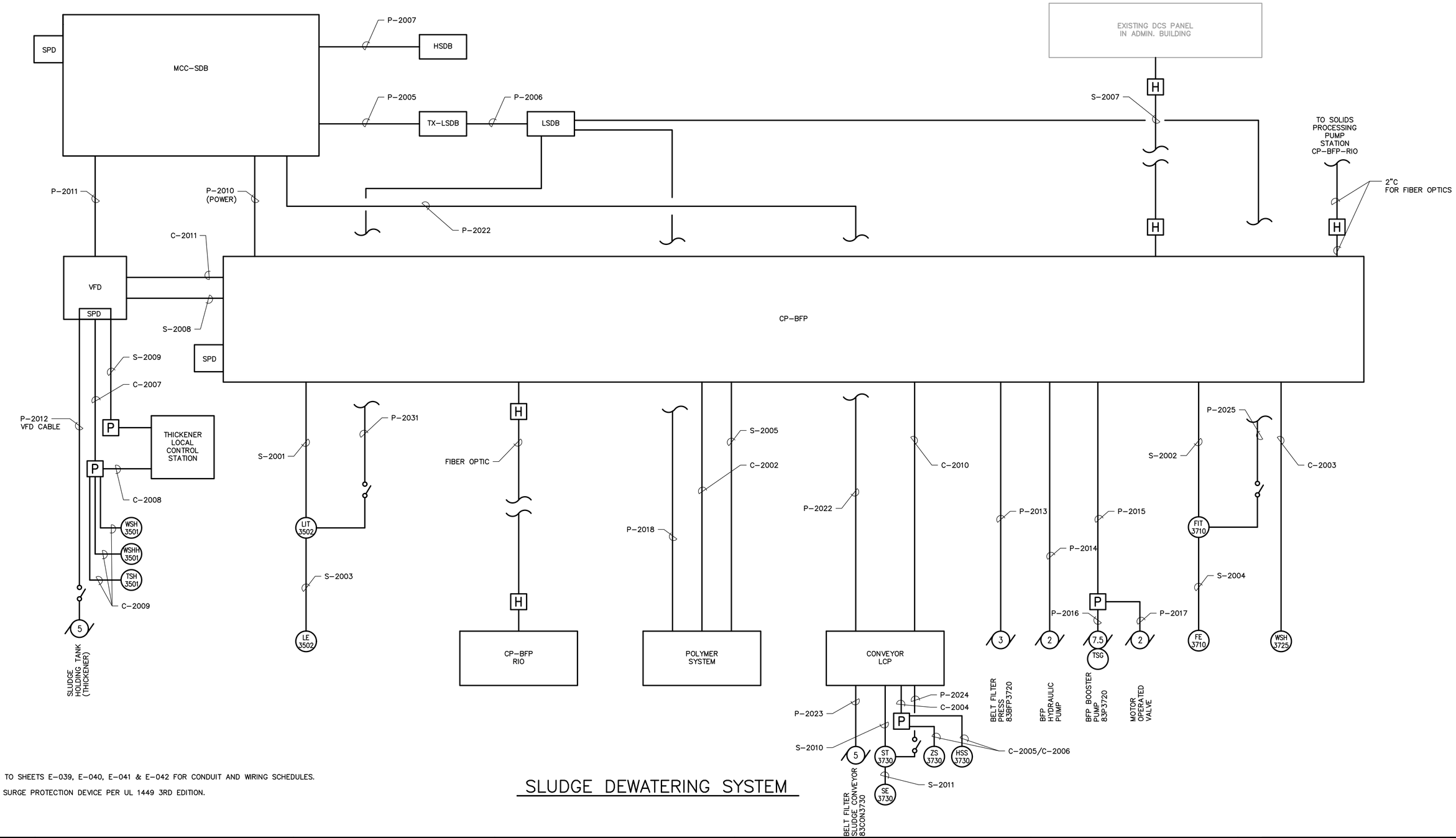

NOTES:

1. REFER TO SHEETS E-039, E-040, E-041 & E-042 FOR CONDUIT AND WIRING SCHEDULES.
2. "SPD" SURGE PROTECTION DEVICE PER UL 1449 3RD EDITION.

SLUDGE DEWATERING SYSTEM

COPYRIGHT:
ARCADIS U.S., INC.
2016

IF THIS BAR IS NOT 1" INDICATED SCALE IS INCORRECT

NO.	DATE	ISSUED FOR	BY
0	JUL 2019	BIDDING	HG

SEALS

GEORGIA REGISTERED No. 013444 PROFESSIONAL ENGINEER IVAN M. GONZALEZ July 31, 2019

ARCADIS
BPA
A Joint Venture
2839 Paces Ferry Road
Suite 900
Atlanta, GA 30339
Tel: 770-431-8666
Fax: 770-435-2666
www.arcadis-us.com

ATLANTA, GEORGIA
CITY OF ATLANTA
DEPARTMENT OF WATERSHED MANAGEMENT

EAST AREA WATER QUALITY CONTROL FACILITY IMPROVEMENTS

W.01.02.0085

SHEET TITLE

EAWQCF CONTROL WIRING INTERCONNECTION PLANS AND DETAILS 1

DATE:	JULY 2019
PROJECT NO.:	GABPA134
DESIGNED BY:	S. PATEL
DRAWN BY:	J. BROWN
CHECKED BY:	I. GONZALEZ

SCALE: NONE

E-030

SHEET 110 OF 150

User:CATKINS Spec:AUS-NCSMOD File:G:\GA02DATA\AUTOCAD\ACAD\PROJ\GABPA134 - CSO GROUP 1\BID PACKAGE 2\SHEETS\ELECTRICAL\E-030.DWG Scale:1:1 SavedDate:7/29/2019 Time:17:04 Plot Date: Atkins, Carlos; 7/31/2019; 16:47 ; Layout:110

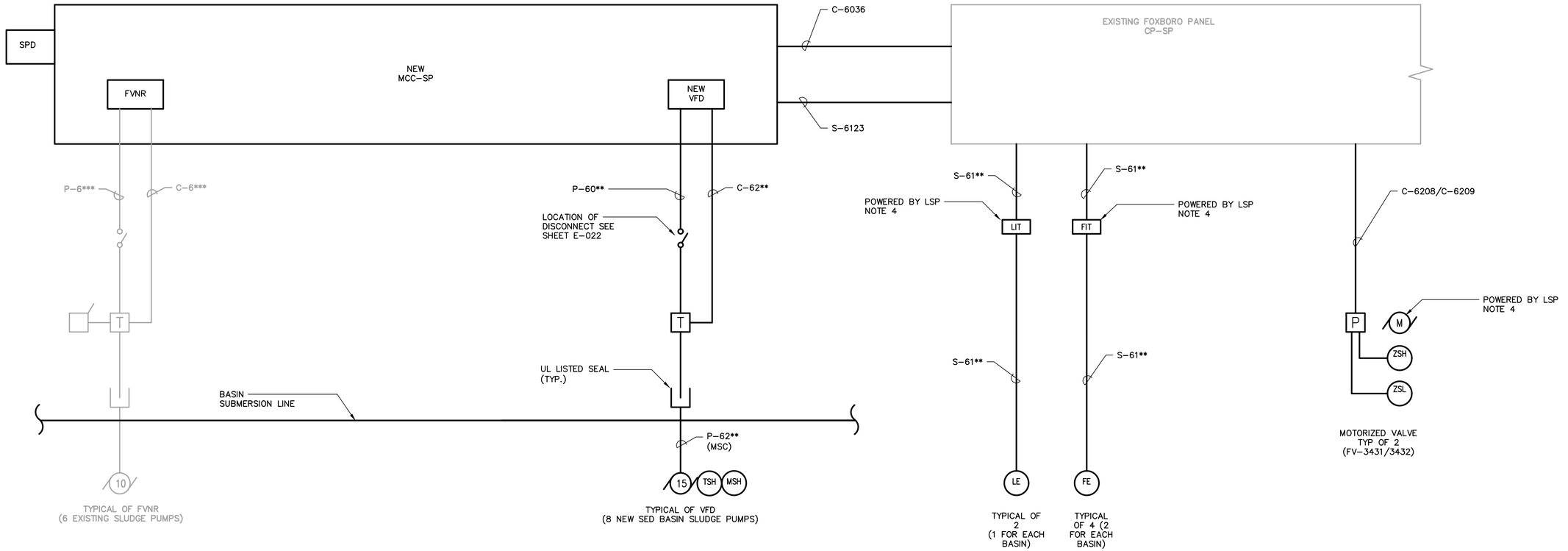

	PUMP	TSH/MSH	LE	FE	ZH
SED. BASIN 1	96P3422 TO 96P3425	3422 TO 3425	3401	3461, 3462	3431
SED. BASIN 2	96P3432 TO 96P3435	3432 TO 3435	3411	3471, 3472	3441

SLUDGE PUMPING SYSTEM

NOTES:

1. TYPICAL CONDUIT NUMBERS (REFER TO E-040 FOR CONDUIT TABLES)
   - P6***= P6031 TO P6036
   - C6***= C6030 TO C6035
   - P60**= P6080 TO P6087
   - S61**= S6124 TO S6135
   - P62**= P6200 TO P6207
   - C62**= C6200 TO C6207
2. PROVIDE CLASS 1 DIV 2 UL LISTED SEAL
3. "SPD" – SURGE PROTECTION DEVICE PER UL 1449.
4. 120,1PH,20/1 CB, FROM LSP

COPYRIGHT:
ARCADIS U.S., INC.
2016

IF THIS BAR IS NOT 1" INDICATED SCALE IS INCORRECT

NO.	DATE	ISSUED FOR	BY
0	JUL 2019	BIDDING	HG

SEALS

GEORGIA REGISTERED No. 013444 PROFESSIONAL ENGINEER IVAN M. GONZALEZ July 31, 2019

ARCADIS
BPA
A Joint Venture
2839 Paces Ferry Road
Suite 900
Atlanta, GA 30339
Tel: 770-431-8666
Fax: 770-435-2666
www.arcadis-us.com

ATLANTA, GEORGIA
CITY OF ATLANTA
DEPARTMENT OF WATERSHED MANAGEMENT

EAST AREA WATER QUALITY CONTROL FACILITY IMPROVEMENTS

W.01.02.0085

SHEET TITLE

EAWQCF CONTROL WIRING INTERCONNECTION PLANS AND DETAILS 2

DATE: JULY 2019
PROJECT NO.: GABPA134
DESIGNED BY: S. PATEL
DRAWN BY: J. BROWN
CHECKED BY: I. GONZALEZ

SCALE: NONE

E-031

SHEET 111 OF 150

User:TTHOMAS Spec:AUS-NCSMOD File:I:\ACAD\PROJ\GABPA134 – CSO GROUP 1\BID PACKAGE 2\SHEETS\ELECTRICAL\E-031.DWG Scale:1:1 SavedDate:7/29/2019 Time:17:03 Plot Date: Thomas, Travis; 7/31/2019; 11:28 ; Layout:111

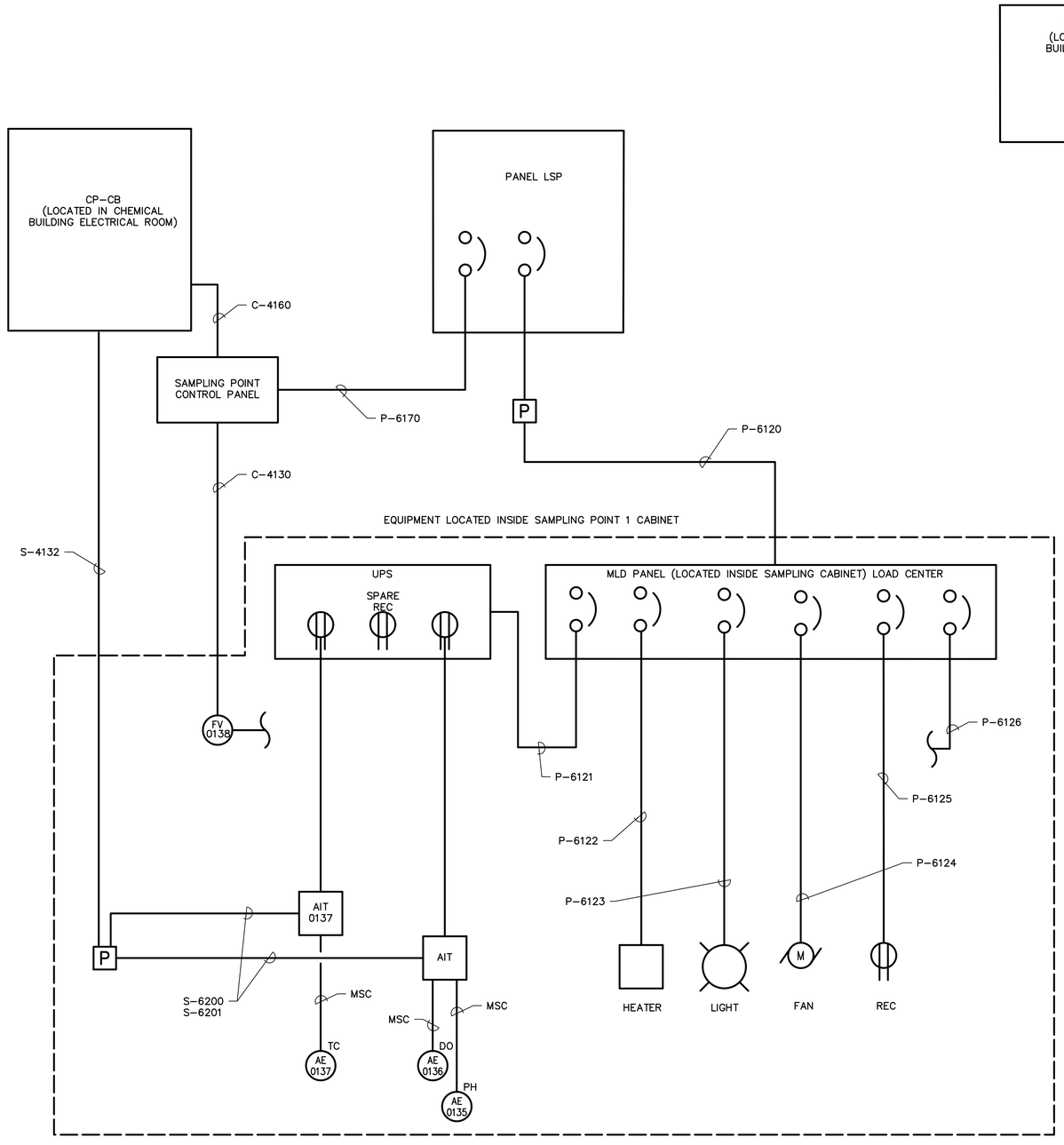

PROPOSED SAMPLING POINT 1 SYSTEM

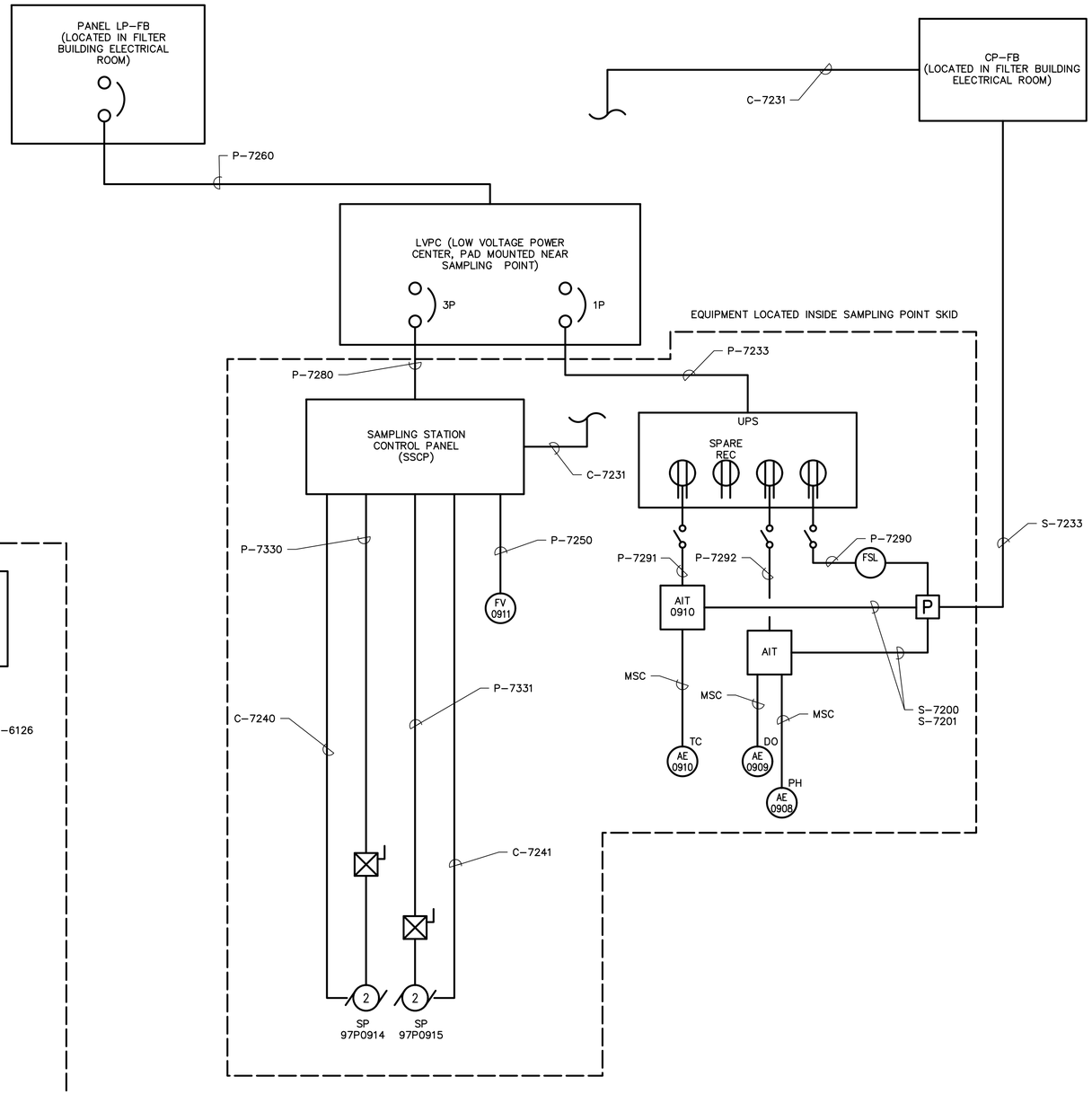

PROPOSED FILTER BUILDING SAMPLING POINT 2 SYSTEM

NOTES:

1. SP – SAMPLING PUMP
2. REFER TO SHEET E–039, E–040 & E–041 FOR CONDUIT/WIRING SCHEDULE

COPYRIGHT:
ARCADIS U.S., INC.
2016

IF THIS BAR IS NOT 1" INDICATED SCALE IS INCORRECT

NO.	DATE	ISSUED FOR	BY
0	JUL 2019	BIDDING	HG

SEALS

GEORGIA REGISTERED No. 013444 PROFESSIONAL ENGINEER IVAN M. GONZALEZ July 31, 2019

ARCADIS
BPA
A Joint Venture
2839 Paces Ferry Road
Suite 900
Atlanta, GA 30339
Tel: 770–431–8666
Fax: 770–435–2666
www.arcadis–us.com

ATLANTA, GEORGIA
CITY OF ATLANTA
DEPARTMENT OF WATERSHED MANAGEMENT

EAST AREA WATER QUALITY CONTROL FACILITY IMPROVEMENTS

W.01.02.0085

SHEET TITLE

EAWQCF CONTROL WIRING INTERCONNECTION PLANS AND DETAILS 3

DATE: JULY 2019
PROJECT NO.: GABPA134
DESIGNED BY: S. PATEL
DRAWN BY: J. BROWN
CHECKED BY: I. GONZALEZ

SCALE: NONE

E–032

SHEET 112 OF 150

User:TTHOMAS Spec:AUS–NCSMOD File:I:\ACAD\PROJ\GABPA134 – CSO GROUP 1\BID PACKAGE 2\SHEETS\ELECTRICAL\E–032.DWG Scale:1:1 SavedDate:2/26/2019 Time:21:21 Plot Date: Thomas, Travis; 7/31/2019; 11:30 ; Layout:112

HEAT TRACING SYSTEM DESCRIPTION

HT TAG / LOOP NO.	LOCN./SERV	PIPING					DESIGN PARAMETERS						CABLE AND CB SELECTION			
		NOM SIZE*	MATERIAL*	INSUL TYPE/THICKNESS*	LIN. FEET*	COMMENTS	Delta T	Thickness	W/Ft	Adj.	Min W/Ft	Tot W	Qty.	W/Ft	V	CB
HT-1-1	SED BASIN 1/FLUIDIZING	4"	DI	FIBERGLASS / 2"	125	HEAT TRACE INSULATED PIPING	70 F	2"	4.60	1.10	5.06	633	1	8	120	20**
HT-2-1	SED BASIN 2/FLUIDIZING	4"	DI	FIBERGLASS / 2"	125	HEAT TRACE INSULATED PIPING	70 F	2"	4.60	1.10	5.06	633	1	8	120	20**
HT-3-1	SLUDGE TANK/SLUDGE PIPE	8"	DI	FIBERGLASS / 2"	20	HEAT TRACE INSULATED PIPING	70 F	2"	7.80	1.10	8.58	172	1	10	120	20***
HT-4-1	SED BASIN/SLUDGE	8"	DI	FIBERGLASS / 2"	10	HEAT TRACE INSULATED PIPING	70 F	2"	7.80	1.10	8.58	86	1	10	120	20**

* REFER TO MECHANICAL DRAWINGS FOR MATERIAL DETAILS AND PIPING LAYOUT.
PIPE SIZE, MATERIALS AND LENGTH SHALL BE CONFIRMED
WITH APPROVED SHOP DRAWINGS AND PIPING CHOICES.

** SEE PANEL LSP
*** SEE PANEL LSDB FOR CIRCUIT REQUIREMENTS
****30 mA GFI

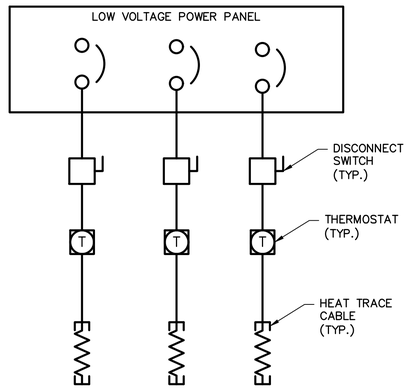

TYPICAL HEAT TRACE

SCALE: N.T.S.

User:TTHOMAS Spec:AUS-NCSMOD File:I:\ACAD\PROJ\GABPA134 - CSO GROUP 1\BID PACKAGE 2\SHEETS\ELECTRICAL\E-033.DWG Scale:1:1 SavedDate:2/26/2019 Time:19:27 Plot Date: Thomas, Travis; 7/31/2019; 11:32 ; Layout:113

COPYRIGHT: ARCADIS U.S., INC. 2016

IF THIS BAR IS NOT 1" INDICATED SCALE IS INCORRECT

NO.	DATE	ISSUED FOR	BY
0	JUL 2019	BIDDING	HG

SEALS

GEORGIA REGISTERED No. 013444 PROFESSIONAL ENGINEER IVAN M. GONZALEZ July 31, 2019

ARCADIS A Joint Venture
BPA
2839 Paces Ferry Road
Suite 900
Atlanta, GA 30339
Tel: 770-431-8666
Fax: 770-435-2666
www.arcadis-us.com

ATLANTA, GEORGIA
CITY OF ATLANTA
DEPARTMENT OF WATERSHED MANAGEMENT

EAST AREA WATER QUALITY CONTROL FACILITY IMPROVEMENTS

W.01.02.0085

SHEET TITLE

EAWQCF CONTROL WIRING INTERCONNECTION PLANS AND DETAILS 4

DATE: JULY 2019
PROJECT NO.: GABPA134
DESIGNED BY: S. PATEL
DRAWN BY: J. BROWN
CHECKED BY: I. GONZALEZ

SCALE: NONE

E-033

SHEET 113 OF 150

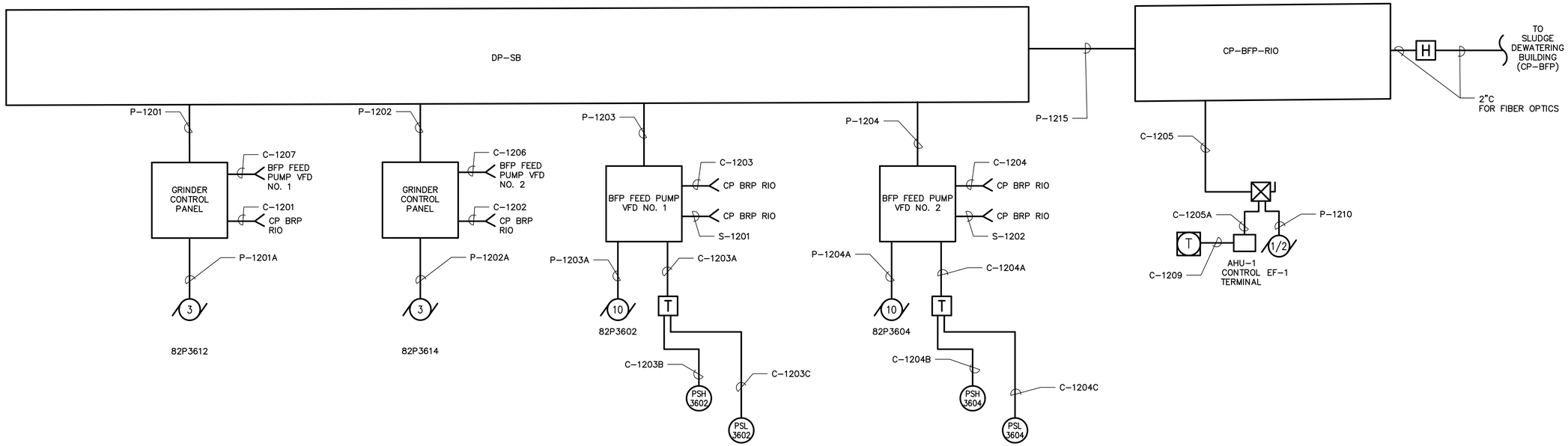

SOLIDS PROCESSING PUMP STATION

COPYRIGHT: ARCADIS U.S., INC. 2016

IF THIS BAR IS NOT 1" INDICATED SCALE IS INCORRECT

NO.	DATE	ISSUED FOR	BY
0	JUL 2019	BIDDING	HG

SEALS

GEORGIA REGISTERED No. 013444 PROFESSIONAL ENGINEER IVAN M. GONZALEZ July 31, 2019

ARCADIS A Joint Venture
BPA
2839 Paces Ferry Road
Suite 900
Atlanta, GA 30339
Tel: 770-431-8666
Fax: 770-435-2666
www.arcadis-us.com

ATLANTA, GEORGIA
CITY OF ATLANTA
DEPARTMENT OF WATERSHED MANAGEMENT

EAST AREA WATER QUALITY CONTROL FACILITY IMPROVEMENTS

W.01.02.0085

SHEET TITLE

EAWQCF CONTROL WIRING INTERCONNECTION PLANS AND DETAILS 5

DATE: JULY 2019
PROJECT NO.: GABPA134
DESIGNED BY: C. ATKINS
DRAWN BY: J. BROWN
CHECKED BY: I. GONZALEZ

SCALE: NONE

E-034

SHEET 114 OF 150

User:TTHOMAS Spec:AUS-NCSMOD File:I:\ACAD\PROJ\GABPA134 - CSO GROUP 1\BID PACKAGE 2\SHEETS\ELECTRICAL\E-034.DWG Scale:1:1 SavedDate:7/30/2019 Time:17:53 Plot Date: Thomas, Travis; 7/31/2019; 11:34 ; Layout:114

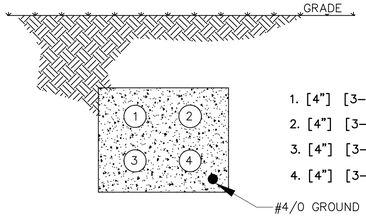

1. [4"] [3–350KCMIL, 1#1/0G] TO MCC–CF (P4101)
2. [4"] [3–350KCMIL, 1#1/0G] TO MCC–CF (P4101)
3. [4"] [3–350KCMIL, 1#1/0G] TO MCC–CF (P4101)
4. [4"] [3–350KCMIL, 1#1/0G] TO MCC–CF (P4101)

H E–003 SECTION
SCALE: N.T.S.

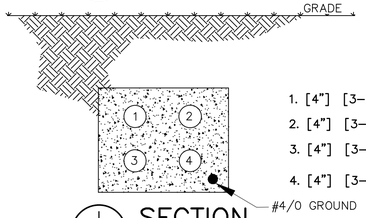

1. [4"] [3–350KCMIL, 1#1/0G] TO MCC–CF (P4100)
2. [4"] [3–350KCMIL, 1#1/0G] TO MCC–CF (P4100)
3. [4"] [3–350KCMIL, 1#1/0G] TO MCC–CF (P4100)
4. [4"] [3–350KCMIL, 1#1/0G] TO MCC–CF (P4100)

I E–004 SECTION
SCALE: N.T.S.

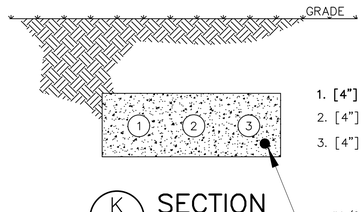

1. [4"] [3#1, 5 kV, 1#6G] TO TX–FB (H7001)
2. [4"] SPARE
3. [4"] SPARE

K E–003 SECTION
SCALE: N.T.S.

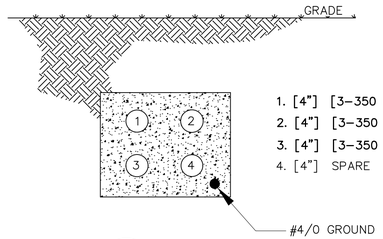

1. [4"] [3–350 KCMIL,1#2/0G] TO NEW MCC–FB (P7001)
2. [4"] [3–350 KCMIL,1#2/0G] TO NEW MCC–FB (P7001)
3. [4"] [3–350 KCMIL,1#2/0G] TO NEW MCC–FB (P7001)
4. [4"] SPARE

L E–004 SECTION
SCALE: N.T.S.

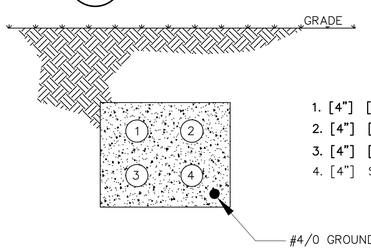

1. [4"] [3–350 KCMIL,1#1/0G] TO NEW MCC–FB (P7002)
2. [4"] [3–350 KCMIL,1#1/0G] TO NEW MCC–FB (P7002)
3. [4"] [3–350 KCMIL,1#1/0G] TO NEW MCC–FB (P7002)
4. [4"] SPARE

M E–004 SECTION
SCALE: N.T.S.

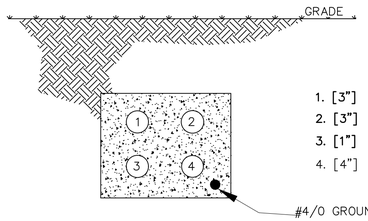

1. [3"] [3–350 KCMIL,1#1/0G] TO MCC SP (P6100)
2. [3"] [3–350 KCMIL,1#1/0G] TO MCC SP (P6100)
3. [1"] [3–#8,1#10G] TO SAMPLING POINT 1
4. [4"] SPARE

T1 E–003 SECTION
SCALE: N.T.S.

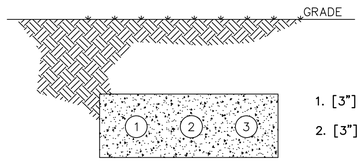

1. [3"] [3–350 KCMIL,1#1/0G] TO MCC SP (P6101)
2. [3"] [3–350 KCMIL,1#1/0G] TO MCC SP (P6101)

T2 E–003 SECTION
SCALE: N.T.S.

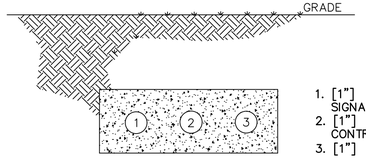

1. [1"] [3 TSP] TO PBOX FOR SIGNAL TO SAMPLING POINT 1
2. [1"] [12– #14, 1#14G] FOR CONTROLS TO SAMPLING POINT 1
3. [1"] SPARE

T3 E–003 SECTION
SCALE: N.T.S.

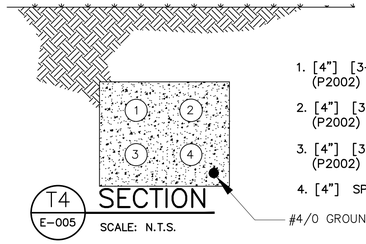

1. [4"] [3–350 KCMIL, 1#1/0G] TO MCC–SDB. (P2002)
2. [4"] [3–350 KCMIL, 1#1/0G] TO MCC–SDB. (P2002)
3. [4"] [3–350 KCMIL, 1#1/0G] TO MCC–SDB. (P2002)
4. [4"] SPARE

T4 E–005 SECTION
SCALE: N.T.S.

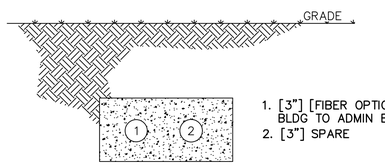

1. [3"] [FIBER OPTIC] FROM DEWATERING BLDG TO ADMIN BLDG DCS
2. [3"] SPARE

T5 E–005 SECTION
SCALE: N.T.S.

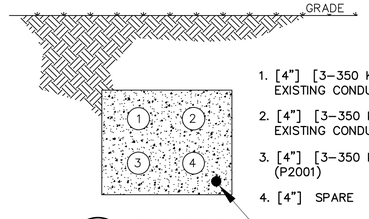

1. [4"] [3–350 KCMIL, 1#1/0G] TO MCC–SDB. USE EXISTING CONDUIT WITH NEW CABLE. (P2001)
2. [4"] [3–350 KCMIL, 1#1/0G] TO MCC–SDB. USE EXISTING CONDUIT WITH NEW CABLE. (P2001)
3. [4"] [3–350 KCMIL, 1#1/0G] TO MCC–SDB. (P2001)
4. [4"] SPARE

T6 E–005 SECTION
SCALE: N.T.S.

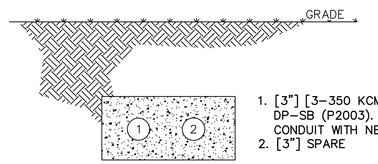

1. [3"] [3–350 KCMIL,1#4G] TO NEW DP–SB (P2003). USE EXISTING CONDUIT WITH NEW CABLE. (P2003)
2. [3"] SPARE

T7 E–004 SECTION
SCALE: N.T.S.

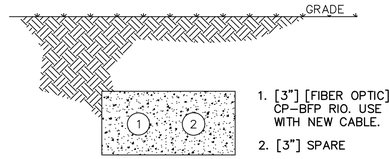

1. [3"] [FIBER OPTIC] FROM CP–BFP TO CP–BFP RIO. USE EXISTING CONDUIT WITH NEW CABLE.
2. [3"] SPARE

T8 E–004 SECTION
SCALE: N.T.S.

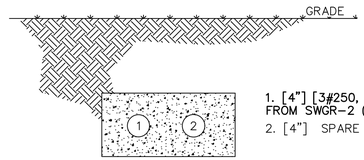

1. [4"] [3#250, 5 kV, 1#4G] TO TX–33 FROM SWGR–2 (H3901)
2. [4"] SPARE

T9 E–004 SECTION
SCALE: N.T.S.

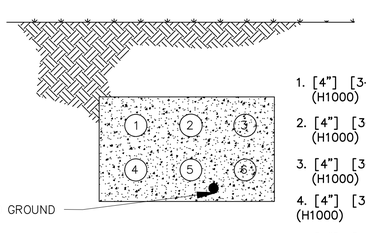

1. [4"] [3–350 KCMIL, 1#3/0G] TO SWGR–2. (H1000)
2. [4"] [3–350 KCMIL, 1#3/0G] TO SWGR–2. (H1000)
3. [4"] [3–350 KCMIL, 1#3/0G] TO SWGR–2. (H1000)
4. [4"] [3–350 KCMIL, 1#3/0G] TO SWGR–2. (H1000)
5. [4"] [3–350 KCMIL, 1#3/0G] TO SWGR–2. (H1000)
6. [4"] SPARE

T10 E–003 SECTION
SCALE: N.T.S.

COPYRIGHT:
ARCADIS U.S., INC.
2016

IF THIS BAR IS NOT 1" INDICATED SCALE IS INCORRECT

NO.	DATE	ISSUED FOR	BY
0	JUL 2019	BIDDING	HG

SEALS

GEORGIA REGISTERED No. 013444 PROFESSIONAL ENGINEER IVAN M. GONZALEZ July 31, 2019

ARCADIS BPA A Joint Venture
2839 Paces Ferry Road
Suite 900
Atlanta, GA 30339
Tel: 770–431–8666
Fax: 770–435–2666
www.arcadis–us.com

ATLANTA, GEORGIA
CITY OF ATLANTA
DEPARTMENT OF WATERSHED MANAGEMENT

EAST AREA WATER QUALITY CONTROL FACILITY IMPROVEMENTS

W.01.02.0085

SHEET TITLE

DUCT BANK SECTIONS

DATE:	JULY 2019
PROJECT NO.:	GABPA134
DESIGNED BY:	C. ATKINS
DRAWN BY:	J. BROWN
CHECKED BY:	I. GONZALEZ

SCALE: NONE

E–035

SHEET 115 OF 150

User: TTHOMAS Spec: AUS–NCSM0D File: I:\ACAD\PROJ\GABPA134 – CSO GROUP 1\BID PACKAGE 2\SHEETS\ELECTRICAL\E–035.DWG Scale:1:1 SavedDate:3/11/2019 Time:16:57 Plot Date: Thomas, Travis; 7/31/2019, 11:36 ; Layout:115

PANELBOARD	NEW DISTRIBUTION PANEL HSDB				LOCATION: SDB BLDG.; WALL, ELECTRICAL ROOM								
TYPE	BOLT-ON CB'S				BRANCHES	20/1 UNLESS NOTED							
SERVICE	480 V,3PH,4W				BUSSING	400A		AIC(AMPS):	100,000 A, SHORT CIRCUIT CAPACITY				
MAINS	MLO				FEED	TOP							
CABINET	NEMA1				MOUNTING	SURFACE			TRIP=AS NOTED				
LOAD DESCRIPTION	TRIP	POLE	CKT	CD	L- 1	L- 2	L- 3	CD	CKT	POLE	TRIP	LOAD DESCRIPTION	
			1	4	3.25			2	2	3	20	ELECTRIC UNIT HEATER #1	
			3	4		3.25		2	4				
			5	4			3.25	2	6				
12' x 14' ROLL-UP DOOR	20	3	7	4	2.85			2	8				
			9	4		2.85		2	10				
			11	4			2.85	2	12				
20' X 14' ROLL-UP DOOR	20	3	13	4	2.85	37.50		2	14	3	60	AIR CONDITIONER UNIT	
			15	2		2.85	37.50	2	16				
			17	2			2.85 37.50	2	18				
			19	2				2	20				
			21	2				2	22				
			23	2				2	24				
			25	4				6	26				
			27	4				6	28				
			29	4				6	30				
SPARE			31						32			SPARE	
SPARE			33						34			SPARE	
SPARE			35						36			SPARE	
SPARE			37						38			SPARE	
SPARE			39						40			SPARE	
SPARE			41						42			SPARE	
TOTAL PHASE KVA					46.45	46.45	46.45						
TOTAL KVA					139.35								
MAXIMUM CONNECTED AMPS					167								
PHASE VOLTAGE					480								

DEMAND KVA:	143.63
DEMAND AMPS:	173

PANELBOARD	LSDB****				LOCATION:	SDB ELECTRICAL ROOM - WALL MTED							
TYPE:	BOLT-ON CB'S				BRANCHES:	AS NOTED							
SERVICE:	120/240V , 1 PH, 3 W				BUSSING:	200 A	AIC(AMPS):	22,000 A, SHORT CIRCUIT CAPACITY					
MAINS:	150 A MCB				FEED:	TOP							
CABINET:	NEMA 1				MOUNTING:	SURFACE			TRIP=AS NOTED				
LOAD DESCRIPTION	TRIP	POLE	CKT	CD	L- 1	L- 2	CD	CKT	POLE	TRIP	LOAD DESCRIPTION		
LIGHTS (BUILDING)	20	1	1	1	0.90	0.15	1	2	1	20	LIGHTS (ELECTRICAL ROOM)		
LIGHTS (CANOPY)	20	1	3	1		0.60 0.72	5	4	1	20	RECEPTACLES (BELT PRESS AREA)		
LOUVER #1	20	1	5	4	1.00	0.72	5	6	1	20	RECEPTACLES (ELECTRICAL ROOM)		
MAGNOMETER	20	1	7	6		1.00 0.70	4	8	1	20	EXHAUST FAN 2		
ELECTRIC UNIT HEATER	20	2	9	2	3.25			10					
			11	2		3.25 0.20		12	1	20	EXIT LIGHTING		
POLYMER LCP	30	1	13	4	2.35			14					
			15			0.18		16			HEAT TRACE (SLUDGE TANK)		
			17					18					
			19			1.65	7	20	1	30	WATER HEATER		
			21					22					
SPARE	20	1	23			0.24	1	24	1	20	WALLPACKS		
TANK LIGHTS	20	1	25	1	0.50			26	1	20	SPARE		
SPARE	20	1	27					28			SPACES		
SPARE	20	1	29					30			SPACES		
TOTAL PHASE KVA					8.872	8.535							
TOTAL KVA					17.407								
MAXIMUM CONNECTED AMPS					74								
PHASE VOLTAGE					120								

DEMAND KVA:	19.06625
DEMAND AMPS:	79

* 5 mA GFCI ** 30 mA GFCI *** SE RATED **** PROVIDE SURGE PROTECTION DEVICE

CABINET	NEW DISTRIBUTION PANEL HSP.1				LOCATION: SP.BLDG.; MCC, ELECTRICAL ROOM								
TYPE	BOLT-ON CB'S				BRANCHES	20/1 UNLESS NOTED							
SERVICE	480V,3PH,4W				BUSSING	225A		AIC(AMPS):	22,000 A, SHORT CIRCUIT CAPACITY				
MAINS	225A MCB				FEED	TOP							
CABINET	NEMA1				MOUNTING	SURFACE			TRIP=AS NOTED				
LOAD DESCRIPTION	TRIP	POLE	CKT	CD	L- 1	L- 2	L- 3	CD	CKT	POLE	TRIP	LOAD DESCRIPTION	
ELECTRIC UNIT HEATER 1	20	3	1		10.00	1.00			2	3	20	CLARIFIER SCUM 1	
			3			10.00	1.00		4				
			5				10.00 1.00		6				
ELECTRIC UNIT HEATER 2	20	3	7		10.00	1.00			8	3	20	CLARIFIER SCUM 2	
			9			10.00	1.00		10				
			11				10.00 1.00		12				
ELECTRIC UNIT HEATER 3	20	3	13		10.00	1.00			14	3	20	PIPE VALVE	
			15			10.00	1.00		16				
			17				10.00 1.00		18				
			19		2.00				20	3	20	RAPID MIX GATES	
			21			2.00			22				
			23				2.00		24				
			25						26				
			27						28				
			29						30				
SPARE			31						32			SPARE	
SPARE			33						34			SPARE	
SPARE			35						36			SPARE	
SPARE			37						38			SPARE	
SPARE			39						40			SPARE	
SPARE			41						42			SPARE	
TOTAL PHASE KVA					35	35	35						
TOTAL KVA					105								
MAXIMUM CONNECTED AMPS					73								
PHASE VOLTAGE					480								

DEMAND KVA:	108.75
DEMAND AMPS:	76

CABINET	NEW DISTRIBUTION PANEL LSP				LOCATION: SP.BLDG.; MCC, ELECTRICAL ROOM								
TYPE	BOLT-ON CB'S				BRANCHES	20/1 UNLESS NOTED							
SERVICE	120/208 V,1PH,3W				BUSSING	225A		AIC(AMPS):	22,000 A, SHORT CIRCUIT CAPACITY				
MAINS	100A MCB				FEED	TOP							
CABINET	NEMA1				MOUNTING	SURFACE			TRIP=AS NOTED				
LOAD DESCRIPTION	TRIP	POLE	CKT	CD	L- 1	L- 2	L- 3	CD	CKT	POLE	TRIP	LOAD DESCRIPTION	
FC-1	20	2	1	5	1.83	1.83		5	2	2	20	CU-1	
			3	5		1.83	1.83	5	4				
RECEPTACLE	20	1	5	5			1.08 1.79	1	6	1	20	LIGHTS - P.S. BSMT	
RECEPTACLE	20	1	7	5	1.26	1.69		1	8	1	20	LIGHTS - P.S. BSMT	
RECEPTACLE	20	1	9	5		1.62	0.78	1	10	1	20	LIGHTS - CONTROL ROOM	
RECEPTACLE - BSMT	20	1	11	5			1.26 0.20	4	12	1	30	EXHAUST FAN 8	
EXHAUST FAN 1	20	1	13	4	0.36	0.50		1	14	1	20	AREA LIGHTS	
INSTRUMENTS	20	1	15	6		0.30		6	16	1	20	INSTRUMENTS	
INSTRUMENTS	20	1	17	6			0.40	6	18	1	20	CHLORINE INJECTOR	
CPSP	20	1	19	6				6	20	1	20	BLANKET DETECTOR	
HT-1-1 (HEAT TRACE SYSTEM)	20	1	21	7		0.79	0.79	7	22	1	20	HT-2-1 (HEAT TRACE SYSTEM)	
			23				6.73		24	1	40	SAMPLING POINT 1 LOAD CENTER	
HT-4-1 (HEAT TRACE SYSTEM)	20	1	25		0.11				26				
LIT-3401	20	1	27			0.60	0.60		28	1	20	LIT-3411	
			29						30				
FIT-3461	20	1	31		0.60	0.60			32	1	20	FIT-3462	
SPARE			33						34	1	20	FIT-3472	
SPARE			35						36			SPARE	
FIT-3471	20	1	37						38			SPARE	
SPARE			39						40			SPARE	
SPARE			41						42			SPARE	
TOTAL PHASE KVA					8.777	9.141	11.46						
TOTAL KVA					29.378								
MAXIMUM CONNECTED AMPS					96								
PHASE VOLTAGE					120								

DEMAND KVA:	25.74
DEMAND AMPS:	62

COPYRIGHT: ARCADIS U.S., INC. 2016

IF THIS BAR IS NOT 1" INDICATED SCALE IS INCORRECT

NO.	DATE	ISSUED FOR	BY
0	JUL 2019	BIDDING	HG

SEALS

GEORGIA REGISTERED No. 013444 PROFESSIONAL ENGINEER IVAN M. GONZALEZ July 31, 2019

ARCADIS BPA A Joint Venture
2839 Paces Ferry Road
Suite 900
Atlanta, GA 30339
Tel: 770-431-8666
Fax: 770-435-2666
www.arcadis-us.com

ATLANTA, GEORGIA
CITY OF ATLANTA
DEPARTMENT OF WATERSHED MANAGEMENT

EAST AREA WATER QUALITY CONTROL FACILITY IMPROVEMENTS

W.01.02.0085

SHEET TITLE

ELECTRICAL PANELBOARD SCHEDULES DRAWING 1

DATE: JULY 2019
PROJECT NO.: GABPA134
DESIGNED BY: S. PATEL
DRAWN BY: J. BROWN
CHECKED BY: I. GONZALEZ

SCALE: NONE

E-036

SHEET 116 OF 150

User:THOMAS Spec:AUS-NCSMOD File:I:\ACAD\PROJ\GABPA134 - CSO GROUP 1\BID PACKAGE 2\SHEETS\ELECTRICAL\E-036.DWG Scale:1:1 SavedDate:5/10/2019 Time:17:04 Plot Date: Thomas, Travis; 7/31/2019; 12:01 : Layout:116

CABINET	EXISTING DISTRIBUTION PANEL LP-FB				LOCATION: FILTER BUILDING, ELECTRICAL ROOM								
TYPE	BOLT-ON CB'S				BRANCHES	20/1 UNLESS NOTED							
SERVICE	480/277 V,3PH,4W				BUSSING	100A		AIC(AMPS):	22,000 A, SHORT CIRCUIT CAPACITY				
MAINS	**100A MCB**				FEED	TOP							
CABINET	NEMA 1				MOUNTING	SURFACE							TRIP=AS NOTED
LOAD DESCRIPTION	TRIP	POLE	CKT	CD	L- 1	L- 2	L- 3	CD	CKT	POLE	TRIP	LOAD DESCRIPTION	
LIGHTING-FILTER OPERATION AREA	20	1	1	1	**2.38**	**1.80**		1	2	1	20	LIGHTING-FILTER OPERATION AREA	
LIGHTING-FILTER OPERATION AREA	20	1	3	1		**2.85**	**2.61**	1	4	1	20	LIGHTING-FILTER OPERATION AREA	
LIGHTING-FILTER OPERATION AREA	20	1	5	1			**2.38** **1.80**	1	6	1	20	LIGHTING-FILTER OPERATION AREA	
LIGHTING-CHEM. STORAGE ROOMS	20	1	7	1	**2.40**	**1.50**		1	8	1	20	LIGHTING-LAB	
SPARE	20	1	9	0		**0.00**	**0.00**	0	10	1	20	SPARE	
EMERGENCY LIGHTS	20	1	11	1			**0.00** **0.00**	1	12	1	30	ELECTRICAL ROOM	
SPACE		1	13			**2.50**		6	14	3	30	**LVPC (SAMPLING POINT 2)**	
SPACE		1	15				**2.50**	6	16				
SPACE		1	17				**2.50**	6	18				
SPACE		1	19						20	1		SPACE	
SPACE		1	21						22	1		SPACE	
SPACE		1	23						24	1		SPACE	
			25						26				
			27						28				
			29						30				
			31						32				
			33						34				
			35						36				
			37						38				
			39						40				
			41						42				
TOTAL PHASE KVA					**10.575**	**7.96**	**6.675**						
TOTAL KVA					**25.21**								
MAXIMUM CONNECTED AMPS					**22**								
PHASE VOLTAGE					**480**								

DEMAND KVA:	**28.99**		
DEMAND AMPS:	**35**		

PANELBOARD	SPCBP****				LOCATION: SODIUM DOSING SAMPLING POINT 1 MAIN BREAKER								
TYPE	BOLT-ON CB'S				BRANCHES: AS NOTED								
SERVICE	120/240 V, 1PH, 3W				BUSSING: 100 A		AIC(AMPS):	18,000 A, SHORT CIRCUIT CAPACITY					
MAINS	125A MAIN LUGS				FEED: TOP								
CABINET	NEMA1			KVA	MOUNTING: SURFACE								TRIP=AS NOTED
LOAD DESCRIPTION	TRIP	POLE	CKT	CD	L- 1	L- 2	CD	CKT	POLE	TRIP	LOAD DESCRIPTION		
SPARE	20	1	1	0				2					
			3			**1.50**	6	4	1	20	**UPS**		
FAN	20	1	5	4	**0.20**			6					
RECEPTACLE	20	1	7	5		**1.80**		8	1	20			
LIGHT	20	1	9	1	**0.08**			10					
			11					12					
HEATER	30	1	13	2	**2.50**			14					
			15			**0.20**		16					
			17					18					
			19					20					
SPARE			21					22			SPARE		
SPARE			23					24			SPARE		
SPARE			25					26			SPARE		
SPARE			27					28			SPARE		
TOTAL PHASE KVA					**2.78**	**3.5**							
TOTAL KVA					**6.28**								
MAXIMUM CONNECTED AMPS					**52**								
PHASE VOLTAGE					**120**								

DEMAND KVA:	**6.53**
DEMAND AMPS:	**27**

PANELBOARD	SPCBP****				LOCATION: FILTER BUILDING SAMPLING POINT 2 LVPC PANEL								
TYPE	BOLT-ON CB'S				BRANCHES	20/1 UNLESS NOTED							
SERVICE	120/240 V, 3PH, 3W				BUSSING	100A		AIC(AMPS):	18,000 A, SHORT CIRCUIT CAPACITY				
MAINS	40A MCB				FEED	TOP							
CABINET	NEMA1			KVA	MOUNTING	SURFACE							TRIP=AS NOTED
LOAD DESCRIPTION	TRIP	POLE	CKT	CD	L- 1	L- 2	L- 3	CD	CKT	POLE	TRIP	LOAD DESCRIPTION	
UPS	20	1	1	6	**1.50**	**3.70**		6	2	3	30	**SAMPLING STATION CONTROL PANE**	
			3				**3.70**		4				
			5						6				
			7										
			9										
			11										
			13										
			15										
			17										
			19										
			21										
			23										
			25						26				
			27						28				
TOTAL PHASE KVA					**5.2**	**3.7**	**3.7**						
TOTAL KVA					**12.6**								
MAXIMUM CONNECTED AMPS					**43**								
PHASE VOLTAGE					**120**								

DEMAND KVA:	**14.49**
DEMAND AMPS:	**35**

User: TTHOMAS Spec: AUS-NCSMOD File: I:\ACAD\PROJ\GABPA134 - CSO GROUP 1\BID PACKAGE 2\SHEETS\ELECTRICAL\E-037.DWG Scale: 1:1 SavedDate: 2/26/2019 Time: 19:29 Plot Date: Thomas, Travis; 7/31/2019; 12:03 ; Layout: 117

COPYRIGHT: ARCADIS U.S., INC. 2016

IF THIS BAR IS NOT 1" INDICATED SCALE IS INCORRECT

NO.	DATE	ISSUED FOR	BY
0	JUL 2019	BIDDING	HG

SEALS

GEORGIA REGISTERED No. 013444 PROFESSIONAL ENGINEER IVAN M. GONZALEZ July 31, 2019

ARCADIS A Joint Venture
BPA
2839 Paces Ferry Road
Suite 900
Atlanta, GA 30339
Tel: 770-431-8666
Fax: 770-435-2666
www.arcadis-us.com

ATLANTA, GEORGIA
CITY OF ATLANTA
DEPARTMENT OF WATERSHED MANAGEMENT

EAST AREA WATER QUALITY CONTROL FACILITY IMPROVEMENTS

W.01.02.0085

SHEET TITLE

ELECTRICAL PANELBOARD SCHEDULES DRAWING 2

DATE: JULY 2019
PROJECT NO.: GABPA134
DESIGNED BY: S. PATEL
DRAWN BY: J. BROWN
CHECKED BY: I. GONZALEZ

SCALE: NONE

E-037

SHEET 117 OF 150

CABINET	NEW DISTRIBUTION PANEL HSB				LOCATION: SB BLDG.; MEZZANINE								
TYPE	BOLT-ON CB'S				BRANCHES	20/1 UNLESS NOTED							
SERVICE	277/480V,3PH,4W				BUSSING	225A		AIC(AMPS):	22,000 A, SHORT CIRCUIT CAPACITY				
MAINS	100A MCB				FEED	TOP							
CABINET	NEMA1				MOUNTING	SURFACE							TRIP=AS NOTED

LOAD DESCRIPTION	TRIP	POLE	CKT	CD	KVA L-1	KVA L-2	KVA L-3	CD	CKT	POLE	TRIP	LOAD DESCRIPTION
AHU-1	100	3	1		**22.00**	**5.00**			2	3	20	**STEP DOWN XFMR T1**
			3				**22.00**	**5.00**	4			
			5					**22.00**	**5.00**	6			
SPARE	20	3	7		**1.00**				8	3	20	**HOIST**
			9			**1.00**			10			
			11				**1.00**		12			
			13						14			
			15						16			
			17						18			
			19						20			
			21						22			
			23						24			
			25						26			
			27						28			
			29						30			
			31						32			
			33						34			
			35						36			
			37						38			
			39						40			
			41						42			
TOTAL PHASE KVA					**28**	**28**	**28**					
TOTAL KVA					**84**			DEMAND KVA:				**84.75**
MAXIMUM CONNECTED AMPS					**58**			DEMAND AMPS:				**59**
PHASE VOLTAGE					**480**							

CABINET	NEW DISTRIBUTION PANEL LSB				LOCATION: SB BLDG.; MEZZANINE								
TYPE	BOLT-ON CB'S				BRANCHES	20/1 UNLESS NOTED							
SERVICE	120/208 V,3PH,4W				BUSSING	100A		AIC(AMPS):	18,000 A, SHORT CIRCUIT CAPACITY				
MAINS	40A MCB				FEED	TOP							
CABINET	NEMA1				MOUNTING	SURFACE							TRIP=AS NOTED

LOAD DESCRIPTION	TRIP	POLE	CKT	CD	KVA L-1	KVA L-2	KVA L-3	CD	CKT	POLE	TRIP	LOAD DESCRIPTION
RECEPTACLES	20	1	1		**0.90**				2			
LIGHTS- PUMP AREA	20	1	3			**0.44**	**0.91**		4	1	20	**EXHAUST FAN #5**
SPARE	20	1	5				**0.13**	**0.50**	6	1	20	**LIGHTS - MEZZANINE**
									8			
			9						10			
			11						12			
			13						14			
			15						16			
			17						18			
			19						20			
			21						22			
			23						24			
			25						26			
			27						28			
			29						30			
SPACE			31						32			SPACE
SPACE			33						34			SPACE
SPACE			35						36			SPACE
SPACE			37						38			SPACE
SPACE			39						40			SPACE
SPACE			41						42			SPACE
TOTAL PHASE KVA					**0.9**	**1.355**	**0.625**					
TOTAL KVA					**2.88**			DEMAND KVA:				**3.22**
MAXIMUM CONNECTED AMPS					**4**			DEMAND AMPS:				**9**
PHASE VOLTAGE					**208**							

COPYRIGHT:
ARCADIS U.S., INC.
2016

IF THIS BAR IS NOT 1" INDICATED SCALE IS INCORRECT

NO.	DATE	ISSUED FOR	BY
0	JUL 2019	BIDDING	HG

SEALS

GEORGIA REGISTERED No. 013444 PROFESSIONAL ENGINEER IVAN M. GONZALEZ July 31, 2019

ARCADIS
BPA
A Joint Venture
2839 Paces Ferry Road
Suite 900
Atlanta, GA 30339
Tel: 770-431-8666
Fax: 770-435-2666
www.arcadis-us.com

ATLANTA, GEORGIA
CITY OF ATLANTA
DEPARTMENT OF WATERSHED MANAGEMENT

EAST AREA WATER QUALITY CONTROL FACILITY IMPROVEMENTS

W.01.02.0085

SHEET TITLE

ELECTRICAL PANELBOARD SCHEDULES DRAWING 3

DATE: JULY 2019
PROJECT NO.: GABPA134
DESIGNED BY: C. ATKINS
DRAWN BY: J. BROWN
CHECKED BY: I. GONZALEZ

SCALE: NONE

E-038

SHEET 118 OF 150

User:TTHOMAS Spec:AUS-NCSMOD File:I:\ACAD\PROJ\GABPA134 - CSO GROUP 1\BID PACKAGE 2\SHEETS\ELECTRICAL\E-038.DWG Scale:1:1 SavedDate:3/28/2019 Time:13:31 Plot Date: Thomas, Travis; 7/31/2019; 12:05 ; Layout:118

TAG	CONDUIT	CABLE								EQUIPMENT FROM		EQUIPMENT TO		REMARKS
		POWER		GROUND		CONTROL		INSTR.	VOLTAGE	TAG NUMBER	NAME	TAG NUMBER	NAME	
	SIZE (IN)	QTY	SIZE	QTY	SIZE	QTY	SIZE							
4160 SWITCHGEAR #2														
H1000	REFER TO DUCT BANK DETAILS FOR INFORMATION								4160	SWGR 2	SWITCHGEAR #2	SWGR 1	SWITCHGEAR #1	
H2000	REFER TO DUCT BANK DETAILS FOR INFORMATION								4160	SWGR 2	SWITCHGEAR #2	TX-31	1000/1120 KVA 4160-480Y/277V	
H7001	REFER TO DUCT BANK DETAILS FOR INFORMATION								4160	SWGR 2	SWITCHGEAR #2	TX-CF2	500/560 KVA 4160-480Y/277V	
H4006	REFER TO DUCT BANK DETAILS FOR INFORMATION								4160	SWGR 2	SWITCHGEAR #2	TX-32	500/560 KVA 4160-480Y/277V	
H3901	REFER TO DUCT BANK DETAILS FOR INFORMATION								4160	SWGR 2	SWITCHGEAR #2	TX-33	500/560 KVA 4160-480Y/277V	
C1000	2"					10	#12		120	SWGR 2	SWITCHGEAR #2	SWGR 1	SWITCHGEAR #1	
C4110	2"					5	#16 TSP		120	SWGR 2	SWITCHGEAR #2	CB	CHEMICAL BUILDING	

TAG	CONDUIT	CABLE								EQUIPMENT FROM		EQUIPMENT TO		REMARKS
		POWER		GROUND		CONTROL		INSTR.	VOLTAGE	TAG NUMBER	NAME	TAG NUMBER	NAME	
	SIZE (IN)	QTY	SIZE	QTY	SIZE	QTY	SIZE							
AREA 97: FILTER BUILDING														
C7001	3/4"			1	#14	6	#14			MCC-FB	MOTOR CONTROL CENTER	HS 97B0511	HAND-OFF-AUTO BLOWER 1	NEW WIRE
C7002	3/4"			1	#14	6	#14			MCC-FB	MOTOR CONTROL CENTER	HS 97B0512	HAND-OFF-AUTO BLOWER 2	NEW WIRE
C7003	3/4"			1	#14	6	#14			MCC-FB	MOTOR CONTROL CENTER	HS 97B0513	HAND-OFF-AUTO BLOWER 3	NEW WIRE
C7006	3/4"			1	#14	2	#14			MCC-FB	MOTOR CONTROL CENTER	97B0511	FILTER BLOWER 1/ SPACE HEATER	NEW WIRE
C7007	3/4"			1	#12	2	#12			MCC-FB	MOTOR CONTROL CENTER	97B0512	FILTER BLOWER 2/ SPACE HEATER	NEW WIRE
C7008	3/4"			1	#12	2	#12			MCC-FB	MOTOR CONTROL CENTER	97B0513	FILTER BLOWER 3/ SPACE HEATER	NEW WIRE
C7011	3/4"			1	#12	2	#12			MCC-FB	MOTOR CONTROL CENTER	97B0511	COOLING FAN 1	NEW WIRE
C7012	3/4"			1	#12	2	#12			MCC-FB	MOTOR CONTROL CENTER	97B0512	COOLING FAN 2	NEW WIRE
C7013	3/4"			1	#12	2	#12			MCC-FB	MOTOR CONTROL CENTER	97B0513	COOLING FAN 3	NEW WIRE
C7014	3/4"			1	#14	2	#14			MCC-FB STARTER 97EF0002	MOTOR CONTROL CENTER	97UH0001	ELECTRIC HEATER 1	NEW WIRE
C7015	3/4"			1	#14	2	#14			MCC-FB STARTER 97EF0001	MOTOR CONTROL CENTER	97UH0002	ELECTRIC HEATER 2	NEW WIRE
C7016	3/4"			1	#14	2	#14			MCC-FB STARTER 97EF0001	MOTOR CONTROL CENTER	97UH0003	ELECTRIC HEATER 3	NEW WIRE
C7017	3/4"			1	#14	2	#14			MCC-FB STARTER 97EF0004	MOTOR CONTROL CENTER	97UH0004	ELECTRIC HEATER 4	NEW WIRE
C7018	3/4"			1	#14	2	#14			MCC-FB STARTER 97EF0004	MOTOR CONTROL CENTER	97UH0005	ELECTRIC HEATER 5	NEW WIRE
C7019	3/4"			1	#14	2	#14			MCC-FB STARTER 97EF0002	MOTOR CONTROL CENTER	97UH0006	ELECTRIC HEATER 6	NEW WIRE
C7021	2"			1	#14	50	#14			MCC-FB	MOTOR CONTROL CENTER	97LCP0551	WASHWATER PUMP LOCAL CONTROL PANEL	NEW WIRE
C7024										DCS		97LCP0551	WASHWATER PUMP LOCAL CONTROL PANEL	NEW WIRE
C7101	2"			1	#14	80	#14			MCC-FB	MOTOR CONTROL CENTER	DCS		NEW WIRE
C7104	3/4"			1	#14	2	#14			MCC-FB	MOTOR CONTROL CENTER	97PSH0511	BLOWER 1 DISCHARGE PRESSURE SWITCH	NEW WIRE
C7105	3/4"			1	#14	2	#14			MCC-FB	MOTOR CONTROL CENTER	97PSH0512	BLOWER 2 DISCHARGE PRESSURE SWITCH	NEW WIRE
C7106	3/4"			1	#14	2	#14			MCC-FB	MOTOR CONTROL CENTER	97PSH0513	BLOWER 3 DISCHARGE PRESSURE SWITCH	NEW WIRE
C7201	1"			1	#12	10	#12			PPL2-FB	LOW VOLTAGE POWER PANEL PPL2-FB 120/208	MCC-FB	PUMP & BLOWER MOTORS (5) SPACE HEATERS	NEW WIRE
C7208	3/4"			1	#12	6	#12			PPL2-FB	LOW VOLTAGE POWER PANEL PPL2-FB 120/208	MCC-FB	3 BLOWERS STARTER CONTACTS FOR ENCLOSURE BLOWERS	NEW WIRE
C7215	3/4"			1	#12	2	#12			PPL2-FB	LOW VOLTAGE POWER PANEL PPL2-FB 120/208	MCC-FB	HYDRAULIC FITRATION PUMP STARTER CONTACTS FOR HYDRAULIC UNIT COOLING FAN	NEW WIRE
C7230	3/4"			1	#12	2	#12			PPL2-FB	LOW VOLTAGE POWER PANEL PPL2-FB 120/208	MCC-FB	HYDRAULIC FITRATION PUMP STARTER CONTACTS FOR HYDRAULIC UNIT COOLING FAN	NEW WIRE
C7231	3/4"			1	#14	6	#14			CP-FB	I/O CABINET CP-FB	SSCP	SAMPLING STATION CONTROL PANEL	NEW
C7240	3/4"			1	#14	8	#14			SSCP	SAMPLE STATION CONTROL PANEL	MOTOR #1	MOTOR 1 MONITORING DEVICES	NEW
C7241	3/4"			1	#14	8	#14			SSCP	SAMPLE STATION CONTROL PANEL	MOTOR #2	MOTOR 2 MONITORING DEVICES	NEW
C7250	3/4"			1	#14	12	#14			PB-SAMPLING CAB 2	PULL BOX FOR MOTOR CONTROL DEVICES	FCV-0911	MOTORIZED VALVE	NEW
C7290	3/4"			1	#14	12	#14			PB-SAMPLING CAB 2	PULL BOX FOR MOTOR CONTROL DEVICES	FSL	MOTORIZED VALVE	NEW
I7101	3/4"			1	#14	5		#14		MCC-FB	MOTOR CONTROL CENTER	U-97P0551	WASHWATER PUMP 1 CTR. JUNCTION BOX(TS,MS)	NEW WIRE
I7102	3/4"			1	#14	5		#14		MCC-FB	MOTOR CONTROL CENTER	U-97P0552	WASHWATER PUMP 2 CTR. JUNCTION BOX(TS,MS)	NEW WIRE
I7103	3/4"			1	#14	5		#14		MCC-FB	MOTOR CONTROL CENTER	U-97P0553	WASHWATER PUMP 3 CTR. JUNCTION BOX(TS,MS)	NEW WIRE
P7001	REFER TO DUCT BANK DETAIL FOR INFORMATION								480	TX-FB	500/560 KVA, 4160-480V FILTER BUILDING XFMR	MCC-FB	MOTOR CONTROL CENTER	NEW WIRE
P7002	REFER TO DUCT BANK DETAIL FOR INFORMATION								480	TX-CF2	1000/1120 KVA, 4160-480V CHEMICAL-SLUDGE PUMP/FILTER BUILDING XFMR	MCC-FB	MOTOR CONTROL CENTER	NEW WIRE
P7003	2-1/2"	3	250 KMCIL	1	#4					MCC-FB	MOTOR CONTROL CENTER	PPH-FB	480V 3-PHASE POWER PANEL PPH-FB	NEW WIRE

TAG	CONDUIT	CABLE								EQUIPMENT FROM		EQUIPMENT TO		REMARKS
		POWER		GROUND		CONTROL		INSTR.	VOLTAGE	TAG NUMBER	NAME	TAG NUMBER	NAME	
	SIZE (IN)	QTY	SIZE	QTY	SIZE	QTY	SIZE							
AREA 97: FILTER BUILDING														
P7004	2"	3	#1/0	1	#6				480	MCC-FB	MOTOR CONTROL CENTER	TX-PPFB	480-208/120V XFMR	NEW WIRE
P7005	1"	3	#6	1	#10				480	MCC-FB	MOTOR CONTROL CENTER	TX-LPFB	480-480/277V XFMR	NEW WIRE
P7006	2"	3	#2/0	1	#6					MCC-FB	MOTOR CONTROL CENTER	97B0511	FILTER BLOWER 1	NEW WIRE
P7007	2"	3	#2/0	1	#6					MCC-FB	MOTOR CONTROL CENTER	97B0512	FILTER BLOWER 2	NEW WIRE
P7008	2"	3	#2/0	1	#6					MCC-FB	MOTOR CONTROL CENTER	97B0513	FILTER BLOWER 3	NEW WIRE
P7012	3/4"	3	#12	1	#12					MCC-FB	MOTOR CONTROL CENTER	97CRN0561	WASHWATER JB CRANE	NEW WIRE
P7013	3/4"	3	#12	1	#12					MCC-FB	MOTOR CONTROL CENTER	96LCP0781	SANITARY PUMP STATION LOCAL PANEL	NEW WIRE
P7031	3/4"	3	#12	1	#12					MCC-FB	MOTOR CONTROL CENTER	97EF0001	EXHAUST FAN 1 DISCONNECT	NEW WIRE
P7032	3/4"	3	#12	1	#12					MCC-FB	MOTOR CONTROL CENTER	97EF0002	EXHAUST FAN 2 DISCONNECT	NEW WIRE
P7033	3/4"	3	#12	1	#12					MCC-FB	MOTOR CONTROL CENTER	97EF0004	EXHAUST FAN 4 DISCONNECT	NEW WIRE
P7034	3/4"	3	#12	1	#12					MCC-FB	MOTOR CONTROL CENTER	97SF0001	SUPLLY FAN 1	NEW WIRE
P7035	3/4"	3	#12	1	#12					MCC-FB	MOTOR CONTROL CENTER	97SF0002	SUPLLY FAN 2	NEW WIRE
P7036	3/4"	3	#12	1	#12					MCC-FB	MOTOR CONTROL CENTER	97SF0003	SUPLLY FAN 3	NEW WIRE
P7037	3/4"	3	#12	1	#12					MCC-FB	MOTOR CONTROL CENTER	97SF0004	SUPLLY FAN 4	NEW WIRE
P7038	3/4"	3	#12	1	#12					MCC-FB	MOTOR CONTROL CENTER	97SF0005	SUPLLY FAN 5	NEW WIRE
P7039	3/4"	3	#12	1	#12					MCC-FB	MOTOR CONTROL CENTER	97SF0006	SUPLLY FAN 6	NEW WIRE
P7043	1"	3	#6	1	#10					MCC-FB	MOTOR CONTROL CENTER	WR1, WR2, WR3	WELDING RECPTACLES	NEW WIRE
P7044	2"	3	#4	1	#6					MCC-FB	MOTOR CONTROL CENTER	PJ-97P0551	WASHWATER PUMP 1 CTR. JUNCTION BOX	NEW WIRE
P7045	2"	3	#4	1	#6					MCC-FB	MOTOR CONTROL CENTER	PJ-97P0552	WASHWATER PUMP 2 CTR. JUNCTION BOX	NEW WIRE
P7046	2"	3	#4	1	#6					MCC-FB	MOTOR CONTROL CENTER	PJ-97P0553	WASHWATER PUMP 3 CTR. JUNCTION BOX	NEW WIRE
P7046	2-1/2"	3	250 KMCIL	1	#4	1	#4		480	MCC-FB	MOTOR CONTROL CENTER	HFB-1	480V 3 PHASE POWER PANEL HFB-1	NEW WIRE
P7047	2-1/2"	3	250 KMCIL	1	#4	1	#4		480	MCC-FB	MOTOR CONTROL CENTER	HFB-2	480V 3 PHASE POWER PANEL HFB-2	NEW WIRE
P7130	1"	6	#10	1	#10					MCC-FB	MOTOR CONTROL CENTER	PJ-97P0553	WASHWATER PUMP 3 CTR. JUNCTION BOX	NEW WIRE
P7132	3/4"	3	#10	1	#10					MCC-FB	MOTOR CONTROL CENTER	HFB-1	480V 3 PHASE POWER PANEL HFB-1	NEW WIRE
P7133	3/4"	2	12	1	#12					MCC-FB	MOTOR CONTROL CENTER	HFB-2	480V 3 PHASE POWER PANEL HFB-2	NEW WIRE
P7233	3/4"	2	#12	1	#12				120	LVPC	LOW VOLTAGE POWER CENTER	UPS	UNINTERUPTIBLE POWER SUPPLY	NEW
P7250	3/4"	2	#12	1	#12				120	SSCP	SAMPLE STATION CONTROL PANEL	FV-0911	MOTORIZED VALVE	NEW
P7260	3/4"	3	#10	1	#10				480	LP-FB	LOW VOLTAGE POWER PANEL LP-FB 480/277	LVPC	LOW VOLTAGE POWER CENTER	NEW
P7280	3/4"	3	#10	1	#10				120	LVPC	LOW VOLTAGE POWER CENTER	SSCP	SAMPLING STATION CONTROL PANEL	NEW
P7290	3/4"	2	#12	1	#12				120	UPS	UNINTERRUPTIBLE POWER SUPPLY	FSL	MOTORIZED VALVE	NEW
P7291	3/4"	2	#12	1	#12				120	UPS	UNINTERRUPTIBLE POWER SUPPLY	AIT	CHLORINE TRANSMITTER	
P7292	3/4"	2	#12	1	#12				120	UPS	UNINTERRUPTIBLE POWER SUPPLY	AIT	DISSOLVED OXYGEN AND PH TRANSMITTER	
P7330	3/4"	2	#10	1	#10				120	SSCP	SAMPLE STATION CONTROL PANEL	PUMP #1	SAMPLING PUMP 1	NEW
P7331	3/4"	2	#10	1	#10				120	SSCP	SAMPLE STATION CONTROL PANEL	PUMP #2	SAMPLING PUMP 2	NEW
S7200	3/4"					1 1 SPARE		TSP		PB-SAMPLING CAB 2	PULL BOX FOR SAMPLING TRANSMITTERS	AIT	CHLORINE TRANSMITTER	NEW
S7201	3/4"					1 1 SPARE		TSP		PB-SAMPLING CAB 2	PULL BOX FOR SAMPLING TRANSMITTERS	AIT	DISSOLVED OXYGEN AND PH TRANSMITTER	NEW
S7233	3/4"					2 1 SPARE		TSP		CP-FB	I/O CABINET CP-FB	PB-SAMPLING CAB 2	PULL BOX FOR SAMPLING TRANSMITTERS	NEW

COPYRIGHT:
ARCADIS U.S., INC.
2016

IF THIS BAR IS NOT 1" INDICATED SCALE IS INCORRECT

NO.	DATE	ISSUED FOR	BY
0	JUL 2019	BIDDING	HG

SEALS

GEORGIA REGISTERED No. 013444 PROFESSIONAL ENGINEER NAYM. GONZALEZ July 31, 2019

ARCADIS
BPA
A Joint Venture
2839 Paces Ferry Road
Suite 900
Atlanta, GA 30339
Tel: 770-431-8666
Fax: 770-435-2666
www.arcadis-us.com

ATLANTA, GEORGIA
CITY OF ATLANTA
DEPARTMENT OF WATERSHED MANAGEMENT

EAST AREA WATER QUALITY CONTROL FACILITY IMPROVEMENTS

W.01.02.0085

SHEET TITLE

CONDUIT SCHEDULE NO. 1

DATE: JULY 2019
PROJECT NO.: GABPA134
DESIGNED BY: S. PATEL
DRAWN BY: J. BROWN
CHECKED BY: I. GONZALEZ

SCALE: NONE

E-039

SHEET 119 OF 150

User: TTHOMAS Spec: AUS-NCSM0D File I: \ACAD\PROJ\GABPA134 - CSO GROUP 1\BID PACKAGE 2\SHEETS\ELECTRICAL\E-039.DWG Scale: 1:1 SavedDate: 7/29/2019 Time: 17:01 Plot Date: Thomas, Travis; 7/31/2019; 12:07 ; Layout: 119

TAG	CONDUIT	CABLE								EQUIPMENT FROM		EQUIPMENT TO		REMARKS
		POWER		GROUND		CONTROL		INSTR.	VOLTAGE					
	SIZE (IN)	QTY	SIZE	QTY	SIZE	QTY	SIZE			TAG NUMBER	NAME	TAG NUMBER	NAME	
AREA 96: SLUDGE PUMP STATION														
C6030	1"			1	#14	12	#14			MCC-SP	MOTOR CONTROL CENTER	96HS3321, HS3331, SV3331, FSL3341	CONTROL/HAND SWITHCES, SOLENOID VALVES, SEAL	EXISTING CONTROL VIA MOTOR STARTER
C6031	1"			1	#14	12	#14			MCC-SP	MOTOR CONTROL CENTER	96HS3322, HS3332, SV3332, FSL3342	CONTROL/HAND SWITHCES, SOLENOID VALVES, SEAL	EXISTING CONTROL VIA MOTOR STARTER
C6032	1"			1	#14	12	#14			MCC-SP	MOTOR CONTROL CENTER	96HS3323, HS3333, SV3333, FSL3343	CONTROL/HAND SWITHCES, SOLENOID VALVES, SEAL	EXISTING CONTROL VIA MOTOR STARTER
C6033	1"			1	#14	12	#14			MCC-SP	MOTOR CONTROL CENTER	96HS3324, HS3334, SV3334, FSL3344	CONTROL/HAND SWITHCES, SOLENOID VALVES, SEAL	EXISTING CONTROL VIA MOTOR STARTER
C6034	1"			1	#14	12	#14			MCC-SP	MOTOR CONTROL CENTER	96HS3325, HS3335, SV3335, FSL3345	CONTROL/HAND SWITHCES, SOLENOID VALVES, SEAL	EXISTING CONTROL VIA MOTOR STARTER
C6035	1"			1	#14	12	#14			MCC-SP	MOTOR CONTROL CENTER	96HS3326, HS3336, SV3336, FSL3346	CONTROL/HAND SWITHCES, SOLENOID VALVES, SEAL	EXISTING CONTROL VIA MOTOR STARTER
C6036	2 1/2"			1	#14	168	#14			MCC-SP	MOTOR CONTROL CENTER	CP-SP	I/O CABINET CP-SP	EXISTING CONTROL VIA MOTOR STARTER
C6037	1"			1	#12	4	#12			MCC-SP	MOTOR CONTROL CENTER	SMOKE DETECTOR ALARM/BEACON	SMOKE DETECTOR & ALARM BEACON/SLUDGE PUMPING	EXISTING CONTROL VIA MOTOR STARTER
C6200	3/4"			1	#14	4	#14			MCC-SP	MOTOR CONTROL CENTER	TB-000	TERMINAL BOX	NEW CONTROL VIA MOTOR VFD
C6201	3/4"			1	#14	4	#14			MCC-SP	MOTOR CONTROL CENTER	TB-001	TERMINAL BOX	NEW CONTROL VIA MOTOR VFD
C6202	3/4"			1	#14	4	#14			MCC-SP	MOTOR CONTROL CENTER	TB-002	TERMINAL BOX	NEW CONTROL VIA MOTOR VFD
C6203	3/4"			1	#14	4	#14			MCC-SP	MOTOR CONTROL CENTER	TB-003	TERMINAL BOX	NEW CONTROL VIA MOTOR VFD
C6204	3/4"			1	#14	4	#14			MCC-SP	MOTOR CONTROL CENTER	TB-004	TERMINAL BOX	NEW CONTROL VIA MOTOR VFD
C6205	3/4"			1	#14	4	#14			MCC-SP	MOTOR CONTROL CENTER	TB-005	TERMINAL BOX	NEW CONTROL VIA MOTOR VFD
C6206	3/4"			1	#14	4	#14			MCC-SP	MOTOR CONTROL CENTER	TB-006	TERMINAL BOX	NEW CONTROL VIA MOTOR VFD
C6207	3/4"			1	#14	4	#14			MCC-SP	MOTOR CONTROL CENTER	TB-007	TERMINAL BOX	NEW CONTROL VIA MOTOR VFD
C6208	3/4"			1	#14	4	#14			CP-SP	CONTROL PANEL	FV-3431	MOTORIZED VALVE BA SIN 1	
C6209	3/4"			1	#14	4	#14			CP-SP	CONTROL PANEL	FV-3432	MOTORIZED VALVE BA SIN 2	
P6025	3/4"	3	#12	1	#12					MCC-SP	MOTOR CONTROL CENTER	96LCP0311	LOCAL PANEL - BIOJECT 1	NEW WIRE
P6026	3/4"	3	#12	1	#12					MCC-SP	MOTOR CONTROL CENTER	96LCP0312	LOCAL PANEL - BIOJECT 2	NEW WIRE
P6027	3/4"	3	#3	1	#8					MCC-SP	MOTOR CONTROL CENTER	96LCP0331	LOCAL PANEL - N. GRIT PUMP STATION 1	NEW WIRE
P6028	3/4"	3	#12	1	#12					MCC-SP	MOTOR CONTROL CENTER	96LCP0351	LOCAL PANEL - DETRITUS 1	NEW WIRE
P6029	3/4"	3	#12	1	#12					MCC-SP	MOTOR CONTROL CENTER	96LCP0361	LOCAL PANEL DETRITUS 2	NEW WIRE
P6030	3/4"	3	#3	1	#8					MCC-SP	MOTOR CONTROL CENTER	96LCP0441	LOCAL PANEL - S. GRIT PUMP STATION 2	NEW WIRE
P6080	3/4"	3	#10	1	#10				480	MCC-SP	MOTOR CONTROL CENTER	TB-000	TERMINAL BOX	NEW POWER VIA MOTOR VFD
P6081	3/4"	3	#10	1	#10				480	MCC-SP	MOTOR CONTROL CENTER	TB-001	TERMINAL BOX	NEW POWER VIA MOTOR VFD
P6082	3/4"	3	#10	1	#10				480	MCC-SP	MOTOR CONTROL CENTER	TB-002	TERMINAL BOX	NEW POWER VIA MOTOR VFD
P6083	3/4"	3	#10	1	#10				480	MCC-SP	MOTOR CONTROL CENTER	TB-003	TERMINAL BOX	NEW POWER VIA MOTOR VFD
P6084	3/4"	3	#10	1	#10				480	MCC-SP	MOTOR CONTROL CENTER	TB-004	TERMINAL BOX	NEW POWER VIA MOTOR VFD
P6085	3/4"	3	#10	1	#10				480	MCC-SP	MOTOR CONTROL CENTER	TB-005	TERMINAL BOX	NEW POWER VIA MOTOR VFD
P6086	3/4"	3	#10	1	#10				480	MCC-SP	MOTOR CONTROL CENTER	TB-006	TERMINAL BOX	NEW POWER VIA MOTOR VFD
P6087	3/4"	3	#10	1	#10				480	MCC-SP	MOTOR CONTROL CENTER	TB-007	TERMINAL BOX	NEW POWER VIA MOTOR VFD
P6200	3/4"		MSC						480	TB-000	TERMINAL BOX	96P3422	SLUDGE PUMP 1	NEW
P6201	3/4"		MSC						480	TB-001	TERMINAL BOX	96P3423	SLUDGE PUMP 2	NEW
P6202	3/4"		MSC						480	TB-002	TERMINAL BOX	96P3424	SLUDGE PUMP 3	NEW
P6203	3/4"		MSC						480	TB-003	TERMINAL BOX	96P3425	SLUDGE PUMP 4	NEW
P6204	3/4"		MSC						480	TB-004	TERMINAL BOX	96P3432	SLUDGE PUMP 5	NEW
P6205	3/4"		MSC						480	TB-005	TERMINAL BOX	96P3433	SLUDGE PUMP 6	NEW
P6206	3/4"		MSC						480	TB-006	TERMINAL BOX	96P3434	SLUDGE PUMP 7	NEW
P6207	3/4"		MSC						480	TB-007	TERMINAL BOX	96P3435	SLUDGE PUMP 8	NEW
P6037	3/4"	3	#12	1	#12	2	#14			MCC-SP	MOTOR CONTROL CENTER	96SF0001	SUPPLY FAN 1	NEW WIRE
P6038	3/4"	3	#12	1	#12	2	#14			MCC-SP	MOTOR CONTROL CENTER	96EF0001	EXHAUST FAN 1	NEW WIRE
P6039	3/4"	3	#12	1	#12	2	#14			MCC-SP	MOTOR CONTROL CENTER	96SF0002	SUPPLY FAN 2	NEW WIRE
P6102	3/4"	2	#12	1	#12	2	#14			LSP	LOW VOLTAGE POWER PANEL	96CU	CU-1 (COOLING UNIT)	NEW
P6103	3/4"	2	#12	1	#12	2	#14			LSP	LOW VOLTAGE POWER PANEL	96FC	FC-1	NEW
P6100	REFER TO DUCT BANK DETAILS FOR MORE INFORMATION								480	MCC-CF	MOTOR CONTROL CENTER	MCC-SP	MOTOR CONTROL CENTER	NEW WIRE
P6101	REFER TO DUCT BANK DETAILS FOR MORE INFORMATION								480	TX-CF2	1000/1120 KVA 4160-480Y/277V	MCC-SP	MOTOR CONTROL CENTER	NEW WIRE
	REFER TO DUCT BANK DETAILS FOR MORE INFORMATION								120	MCC-SP	MOTOR CONTROL CENTER	ML-PANEL	LOAD CENTER	IN SAMPLING CAB

TAG	CONDUIT	CABLE								EQUIPMENT FROM		EQUIPMENT TO		REMARKS
		POWER		GROUND		CONTROL		INSTR.	VOLTAGE					
	SIZE (IN)	QTY	SIZE	QTY	SIZE	QTY	SIZE			TAG NUMBER	NAME	TAG NUMBER	NAME	
AREA 96: SLUDGE PUMP STATION														
P6121		2	#12	1	#12				120	ML-PANEL	LOAD CENTER		UPS	IN SAMPLING CAB
P6122		2	#12	1	#12				120	ML-PANEL	LOAD CENTER		HEATER	IN SAMPLING CAB
P6123		2	#12	1	#12				120	ML-PANEL	LOAD CENTER		LIGHT	IN SAMPLING CAB
P6124		2	#12	1	#12				120	ML-PANEL	LOAD CENTER		FAN	IN SAMPLING CAB
P6125		2	#12	1	#12				120	ML-PANEL	LOAD CENTER		RECEPTACLE	IN SAMPLING CAB
P6126		2	#12	1	#12				120	ML-PANEL	LOAD CENTER	FCV-0138	MOTORIZED VALVE	IN SAMPLING CAB
P6127	3/4"	2	#12	1	#12				120	LSP	120/208V LOW VOLTAGE PANEL		HEAT TRACE	HT-1-1
P6128	3/4"	2	#12	1	#12				120	LSP	120/208V LOW VOLTAGE PANEL		HEAT TRACE	HT-2-1
P6129	3/4"	2	#12	1	#12				120	LSP	120/208V LOW VOLTAGE PANEL		HEAT TRACE	HT-4-1
P6130	3/4"	2	#12	1	#12				120	LSP	120/208V LOW VOLTAGE PANEL	LIT-3401	LEVEL INDICATING TRANSMITTER	SED BASIN 1
P6131	3/4"	2	#12	1	#12				120	LSP	120/208V LOW VOLTAGE PANEL	LIT-3411	LEVEL INDICATING TRANSMITTER	SED BASIN 2
P6132	3/4"	2	#12	1	#12				120	LSP	120/208V LOW VOLTAGE PANEL	FIT-3461	FLOW INDICATING TRANSMITTER	SED BASIN 1
P6133	3/4"	2	#12	1	#12				120	LSP	120/208V LOW VOLTAGE PANEL	FIT-3462	FLOW INDICATING TRANSMITTER	SED BASIN 1
P6134	3/4"	2	#12	1	#12				120	LSP	120/208V LOW VOLTAGE PANEL	FIT-3471	FLOW INDICATING TRANSMITTER	SED BASIN 2
P6135	3/4"	2	#12	1	#12				120	LSP	120/208V LOW VOLTAGE PANEL	FIT-3472	FLOW INDICATING TRANSMITTER	SED BASIN 2
P6136	3/4"	2	#12	1	#12				120	LSP	120/208V LOW VOLTAGE PANEL	FV-3431	MOTORIZED VALVE BASIN 1	
P6137	3/4"	2	#12	1	#12				120	LSP	120/208V LOW VOLTAGE PANEL	FV-3432	MOTORIZED VALVE BASIN 2	
P6138	3/4"	3	#8	1	#10				480	MCC-SP	MOTOR CONTROL CENTER	TX-LSP	480-120/208V XFMR	NEW
P6138A	3/4"	3	#8	1	#10				208	TX-LSP	480-120/208V XFMR	LSP	120/208V PANEL	NEW
P6139	2	3	#4/0	1	#4				480	MCC-SP	MOTOR CONTROL CENTER	HSP	480V PANEL	NEW
P6140	3/4"	3	#12	1	#12				480	HSP	480V PANEL	EUH 1	ELECTRIC UNIT HEATER 1	NEW
P6141	3/4"	3	#12	1	#12				480	HSP	480V PANEL	EUH 2	ELECTRIC UNIT HEATER 2	NEW
P6142	3/4"	3	#12	1	#12				480	HSP	480V PANEL	EUH 3	ELECTRIC UNIT HEATER 3	NEW
P6143	3/4"	3	#12	1	#12				480	HSP	480V PANEL	CS 1	CLARIFIER SCUM 1	NEW WIRE
P6144	3/4"	3	#12	1	#12				480	HSP	480V PANEL	CS 2	CLARIFIER SCUM 2	NEW WIRE
P6145	3/4"	3	#12	1	#12				480	HSP	480V PANEL	-	PIP VALVE	NEW WIRE
P6146	3/4"	3	#12	1	#12				480	HSP	480V PANEL	-	RAPID MIX GATES	NEW WIRE
P6147	3/4"	3	#12	1	#12				480	MCC-SP	MOTOR CONTROL CENTER	-	SUMP PUMP HOIST	NEW WIRE
P6148	3/4"	3	#12	1	#12				480	MCC-SP	MOTOR CONTROL CENTER	-	SUMP PUMP	NEW WIRE
	REFER TO DUCT BANK DETAILS FOR MORE INFORMATION									LSP	MCC-SP	SSCP	SAMPLING STATION CONTROL PANEL	
S6200						2 1 SPARE			TSP		PB-SAMPLING CAB 1	PULL BOX FOR SAMPLING TRANSMITTERS	AIT	CHLORINE TRANSMITTER	IN SAMPLING CAB
S6201						2 1 SPARE			TSP		PB-SAMPLING CAB 1	PULL BOX FOR SAMPLING TRANSMITTERS	AIT	DISSOLVED OXYGEN AND PH TRANSMITTER	IN SAMPLING CAB
S6123	2 1/2"	3	#8	1	#10	16			TSP		MCC-SP	MOTOR CONTROL CENTER	CP-SP	I/O CABINET CP-SP	NEW
S6124	3/4"					1			TSP		CP-SP	CONTROL PANEL	LIT-3401	LEVEL INDICATING TRANSMITTER	NEW
S6125	3/4"					1			TSP		CP-SP	CONTROL PANEL	FIT-3461	FLOW INDICATING TRANSMITTER	NEW
S6126	3/4"					1			MSC		LIT	LEVEL INDICATING TRANSMITTER	LE-3401	LEVEL ELEMENT	NEW
S6127	3/4"					1			MSC		FIT	FLOW INDICATING TRANSMITTER	FE-3461	FLOW ELEMENT	NEW
S6128	3/4"					1			TSP		CP-SP	CONTROL PANEL	LIT-3411	LEVEL INDICATING TRANSMITTER	NEW
S6129	3/4"					1			MSC		LIT	LEVEL INDICATING TRANSMITTER	LE-3411	LEVEL ELEMENT	NEW
S6130	3/4"					1			TSP		CP-SP	CONTROL PANEL	FIT-3462	FLOW INDICATING TRANSMITTER	NEW
S6131	3/4"					1			TSP		CP-SP	CONTROL PANEL	FIT-3471	FLOW INDICATING TRANSMITTER	NEW
S6132	3/4"					1			TSP		CP-SP	CONTROL PANEL	FIT-3472	FLOW INDICATING TRANSMITTER	NEW
S6133	3/4"					1			MSC		FIT	FLOW INDICATING TRANSMITTER	FIT-3462	FLOW ELEMENT	NEW
S6134	3/4"					1			MSC		FIT	FLOW INDICATING TRANSMITTER	FIT-3471	FLOW ELEMENT	NEW
S6135	3/4"					1			MSC		FIT	FLOW INDICATING TRANSMITTER	FIT-3472	FLOW ELEMENT	NEW

COPYRIGHT: ARCADIS U.S., INC. 2016

IF THIS BAR IS NOT 1" INDICATED SCALE IS INCORRECT

NO.	DATE	ISSUED FOR	BY
0	JUL 2019	BIDDING	HG

SEALS

GEORGIA REGISTERED No. 013444 PROFESSIONAL ENGINEER IVAN M. GONZALEZ July 31, 2019

ARCADIS BPA A Joint Venture
2839 Paces Ferry Road
Suite 900
Atlanta, GA 30339
Tel: 770-431-8666
Fax: 770-435-2666
www.arcadis-us.com

ATLANTA, GEORGIA
CITY OF ATLANTA
DEPARTMENT OF WATERSHED MANAGEMENT

EAST AREA WATER QUALITY CONTROL FACILITY IMPROVEMENTS

W.01.02.0085

SHEET TITLE

CONDUIT SCHEDULE NO. 2

DATE: JULY 2019
PROJECT NO.: GABPA134
DESIGNED BY: S. PATEL
DRAWN BY: J. BROWN
CHECKED BY: I. GONZALEZ

SCALE: NONE

E-040

SHEET 120 OF 150

User: TTHOMAS Spec: AUS-NCSM0D File: I:\ACAD\PROJ\GABPA134 - CSO GROUP 1\BID PACKAGE 2\SHEETS\ELECTRICAL\E-040.DWG Scale:1:1 SavedDate:3/18/2019 Time:14:44 Plot Date: Thomas, Travis; 7/31/2019; 12:08 ; Layout:120

TAG	CONDUIT	CABLE								EQUIPMENT FROM		EQUIPMENT TO		REMARKS
		POWER		GROUND		CONTROL		INSTR.	VOLTAGE	TAG NUMBER	NAME	TAG NUMBER	NAME	
	SIZE (IN)	QTY	SIZE	QTY	SIZE	QTY	SIZE							
AREA 83: SLUDGE DEWATERING BUILDING														
P2001	REFER TO DUCT BANK DETAIL FOR INFORMATION								480	TX-31	1000/1120 KVA 4160-480Y/277	MCC-SDB	MOTOR CONTROL CENTER	
P2002	REFER TO DUCT BANK DETAIL FOR INFORMATION								480	TX-CB2	1000/1120 KVA 4160-480Y/277	MCC-SDB	MOTOR CONTROL CENTER	
P2003	REFER TO DUCT BANK DETAIL FOR INFORMATION								480	MCC-SDB	MOTOR CONTROL CENTER	DP-SB	MOTOR CONTROL CENTER	
P2004	REFER TO DUCT BANK DETAIL FOR INFORMATION									CP-BFP	BFP LOCAL CONTROL PANEL	CP-BFP RIO	BFP REMOTE I/O CONTROL PANEL	FIBER OPTIC
P2005	3/4"	2	#6	1	#8				480	MCC-SDB	MOTOR CONTROL CENTER	TX-LSDB	480-120/240V XFMR	
P2006	2"	3	1/0	1	#6				240	TX-LSDB	480-120/240V XFMR	LSDB	120/240V 1 PHASE POWER PANEL	
P2007	3	6	250MCM	1	#3				480	MCC-SDB	MOTOR CONTROL CENTER	HSDB	480V 3 PHASE POWER PANEL	
P2008	3/4"	3	#12	1	#12				480	MCC-SDB	MOTOR CONTROL CENTER	EF-1	EXHAUST FAN 1	
P2009	3/4"	2	#12	1	#12				120	LSDB	120/240V 1 PHASE POWER PANEL	EF-2	EXHAUST FAN 2	
P2010	3/4"	3	#10	1	#10				480	MCC-SDB	MOTOR CONTROL CENTER	CP-BFP	BFP LOCAL CONTROL PANEL	
P2011	3/4"	3	#10	1	#10				480	MCC-SDB	MOTOR CONTROL CENTER	*	SLUDGE THICKENER MIXER VFD	
P2012	3/4"	3	#10	1	#10				480	CP-BFP	BFP LOCAL CONTROL PANEL	81T3501	SLUDGE THICKENER MIXER	VFD CABLE
P2013	3/4"	3	#12	1	#12				480	CP-BFP	BFP LOCAL CONTROL PANEL	83BFP3720	BELT FILTER PRESS	
P2014	3/4"	3	#12	1	#12				480	CP-BFP	BFP LOCAL CONTROL PANEL	83BFP3720	BFP HYDRAULIC PUMP	
P2015	3/4"	6	#12	2	#12				480	CP-BFP	BFP LOCAL CONTROL PANEL	*	PULL BOX	
P2016	3/4"	3	#12	1	#12				480	*	PULL BOX	83P3720	BFP BOOSTER PUMP	
P2017	3/4"	3	#12	1	#12				480	*	PULL BOX	*	MOTORIZED BALL VALVE	
P2018	3/4"	2	#10	1	#10				120	LSDB	120/240V 1 PHASE POWER PANEL	83POLY3701	POLYMER SYSTEM LOCAL CONTROL PANEL	
P2019	3/4"	2	#12	1	#12			MSC	120	83POLY3701	POLYMER SYSTEM LOCAL CONTROL PANEL	*	POLYMER FEED SYSTEM	
P2020	3/4"	2	#12	1	#12			MSC	120	83POLY3701	POLYMER SYSTEM LOCAL CONTROL PANEL	*	POLYMER TOTE MIXER	
P2021	3/4"	2	#12	1	#12			MSC	120	83POLY3701	POLYMER SYSTEM LOCAL CONTROL PANEL	*	POLYMER MIXER	
P2022	3/4"	3	#12	1	#12				480	MCC-SDB	MOTOR CONTROL CENTER	CP-BCP	BELT CONVEYOR PANEL	
P2023	3/4"	3	#12	1	#12				480	CP-BCP	BELT CONVEYOR PANEL	83CON3730	BF SLUDGE CONVEYOR	
P2024	3/4"	2	#12	1	#12				120	CP-BCP	BELT CONVEYOR PANEL	ST3730	SPEED TRANSMITTER	
P2025	3/4"	2	#12	1	#12				120	LSDB	120/240V 1 PHASE POWER PANEL	FIT3710	FIT	
P2026	3/4"	2	#12	1	#12				120	LSDB	120/240V 1 PHASE POWER PANEL	*	RECEPTACLES - BFP	
P2027	3/4"	2	#12	1	#12				120	LSDB	120/240V 1 PHASE POWER PANEL	*	RECEPTACLES - ELEC. ROOM	
P2028	3/4"	2	#10	1	#12				120	LSDB	120/240V 1 PHASE POWER PANEL	*	LIGHTING - BFP	
P2029	3/4"	2	#12	1	#12				120	LSDB	120/240V 1 PHASE POWER PANEL	*	LIGHTING - CANOPY	
P2030	3/4"	2	#12	1	#12				120	LSDB	120/240V 1 PHASE POWER PANEL	*	LIGHTING - ELEC. ROOM	
P2031	3/4"	2	#12	1	#12				120	LSDB	120/240V 1 PHASE POWER PANEL	LIT3502	LIT	
P2032	3/4"	2	#12	1	#12				120	LSDB	120/240V 1 PHASE POWER PANEL	*	HEAT TRACE SLUDGE TANK, OVERFLOW PIPE	HT-3-1 ON HEAT TRACE SCHEDULE
P2033	3/4"	3	#12	1	#12				480	HSDB	480/V 3 PHASE POWER PANEL	*	12X14 ROLL-UP DOOR	
P2034	3/4"	3	#12	1	#12				480	HSDB	480/V 3 PHASE POWER PANEL	*	20X14 ROLL-UP DOOR	
P2035	3/4"	3	#12	1	#12				480	HSDB	480/V 3 PHASE POWER PANEL	EUH-1	ELETRICAL UNIT HEATER #1	
P2036	1 1/2"	3	#3/0	1	#3/0				480	HSDB	480/V 3 PHASE POWER PANEL	AHU-1	AIR CONDITIONER UNIT	
P2037	1"	3	#6	1	#10				480	MCC-SDB	MOTOR CONTROL CENTER	WR8	WELDING RECEPTACLE	
S2001	3/4"							1 TSP		CP-BFP	BFP LOCAL CONTROL PANEL	LIT3502	LIT	
S2002	3/4"							1 TSP		CP-BFP	BFP LOCAL CONTROL PANEL	FIT3710	FIT	
S2003	3/4"							MSC		LIT3502	LIT	LE3502	LE	
S2004	3/4"							MSC		FIT3710	FIT	FE3710	FE	
S2005	3/4"							2 TSP		CP-BCP	BFP LOCAL CONTROL PANEL	83POLY3701	POLYMER SYSTEM LOCAL CONTROL PANEL	
S2007	2"							1 FO		*	EXISTING DCS PANEL IN ADMIN BUILDING	CP-BCP	BFP LOCAL CONTROL PANEL	
S2008	3/4"							2 TSP		*	SLUDGE THICKENER MIXER VFD	CP-BCP	BFP LOCAL CONTROL PANEL	
S2009	3/4"							2 TSP		*	SLUDGE THICKENER MIXER VFD	*	SLUDGE THICKENER LOCAL CONTROL STATION	
S2010	3/4"							1 TSP		CP-BCP	BELT CONVEYOR PANEL	ST3730	SPEED TRANSMITTER	
S2011	3/4"							MSC		ST3730	SPEED TRANSMITTER	SE3730	SPEED ELEMENT	
C2002	1"			1	#14	10	#14			CP-BFP	BFP LOCAL CONTROL PANEL	83POLY3701	POLYMER SYSTEM LOCAL CONTROL PANEL	
C2003	3/4"			1	#14	2	#14			CP-BFP	BFP LOCAL CONTROL PANEL	WSH3725	WEIGHT SWITCH	
C2004	3/4"			2	#14	4	#14			CP-BCP	BELT CONVEYOR PANEL	*	PULL BOX	
C2005	3/4"			1	#14	2	#14			*	PULL BOX	ZS	POSITION SWITCH	
C2006	3/4"			1	#14	2	#14			*	PULL BOX	HSS	HAND SWITCH	

TAG	CONDUIT	CABLE								EQUIPMENT FROM		EQUIPMENT TO		REMARKS
		POWER		GROUND		CONTROL		INSTR.	VOLTAGE	TAG NUMBER	NAME	TAG NUMBER	NAME	
	SIZE (IN)	QTY	SIZE	QTY	SIZE	QTY	SIZE							
AREA 83: SLUDGE DEWATERING BUILDING														
C2007	1"			1	#14	26	#14			*	SLUDGE THICKENER MIXER VFD	*	PULL BOX	
C2008	1"			1	#14	20	#14			*	PULL BOX	*	SLUDGE THICKENER LOCAL CONTROL STATION	
C2009	3/4"			1	#14	6	#14			*	PULL BOX	WSH/WSHH/TSH3501	CONTROL SWITCHES	
C2010	3/4"			1	#14	14	#14			CP-BFP	BFP LOCAL CONTROL PANEL	CP-BCP	BELT CONVEYOR PANEL	
C2011	1"			1	#14	24	#14			*	SLUDGE THICKENER MIXER VFD	CP-BFP	BFP LOCAL CONTROL PANEL	

TAG	CONDUIT	CABLE								EQUIPMENT FROM		EQUIPMENT TO		REMARKS
		POWER		GROUND		CONTROL		INSTR.	VOLTAGE	TAG NUMBER	NAME	TAG NUMBER	NAME	
	SIZE (IN)	QTY	SIZE	QTY	SIZE	QTY	SIZE							
AREA 94: SCREEN/CHEMICAL BUILDING														
C4022	3/4"			1	#12	4	#12		120	MCC-CF	MOTOR CONTROL CENTER	94IL0003	INTAKE LOUVER CHEMICAI BUILDING	NEW WIRE
C4023	3/4"			1	#12	4	#12		120	MCC-CF	MOTOR CONTROL CENTER	94IL0004	INTAKE LOUVER CHEMICA BUILDING	NEW WIRE
C4130	3/4"			1	#14	12	#14		120	SSCP	SAMPLING STATION CONTROL PANEL	SV-0138	MOTORIZED VALVE	NEW WIRE
P4010	3/4"	3	#12	1	#12					MCC-CF	MOTOR CONTROL CENTER	94EF0003	GENERAL EXHAUST FAN CHEMICAL BUILDING	NEW WIRE
P4011	3/4"	3	#12	1	#12					MCC-CF	MOTOR CONTROL CENTER	94EF0004	GENERAL EXHAUST FAN CHEMICAL BUILDING	NEW WIRE
P4012	3/4"	3	#12	1	#12					MCC-CF	MOTOR CONTROL CENTER	EF-5-1	EXHAUST FAN	NEW WIRE
P4013	3/4"	3	#12	1	#12					MCC-CF	MOTOR CONTROL CENTER	EF-5-2	EXHAUST FAN	NEW WIRE
P4015	1-1/2"	3	#1/0	1	#1/0					MCC-CF	MOTOR CONTROL CENTER		HCP-2	NEW WIRE
P4016	2-1/2"	3	#250	1	#4					MCC-CF	MOTOR CONTROL CENTER		HCF	NEW WIRE
P4017	3/4"	3	#12	1	#12					MCC-CF	MOTOR CONTROL CENTER	SF-5-1	SUPPLY FAN	NEW WIRE
P4018	3/4"	3	#12	1	#12					MCC-CF	MOTOR CONTROL CENTER	SF-5-2	SUPPLY FAN	NEW WIRE
P4100	REFER TO DUCK BANK DETAILS FOR MORE INFORMATION								480	TX-32	500/560 KVA 4160-480Y/277V	MCC-CF	MOTOR CONTROL CENTER	NEW
P4101	REFER TO DUCK BANK DETAILS FOR MORE INFORMATION								480	TX-FB	1000/1120 KVA 4160-480Y/277V	MCC-CF	MOTOR CONTROL CENTER	NEW WIRE
P5001	1"	3	#6	1	#10					MCC-CF	MOTOR CONTROL CENTER	95LCP0111	VORTEX LOCAL CONTROL PANEL	NEW WIRE
P5004	3/4"	3	#12	1	#12					MCC-CF	MOTOR CONTROL CENTER	95HST0131	NEW VORTEX SEPARATOR MONO. W/ HOIST & TROLLEY	NEW WIRE

COPYRIGHT:
ARCADIS U.S., INC.
2016

IF THIS BAR IS NOT 1" INDICATED SCALE IS INCORRECT

NO.	DATE	ISSUED FOR	BY
0	JUL 2019	BIDDING	HG

SEALS

GEORGIA REGISTERED No. 013444 PROFESSIONAL ENGINEER I.N.M. GONZALEZ July 31, 2019

ARCADIS
BPA
A Joint Venture
2839 Paces Ferry Road
Suite 900
Atlanta, GA 30339
Tel: 770-431-8666
Fax: 770-435-2666
www.arcadis-us.com

RESURGENS PLAZA ATLANTA, GA. 30301

ATLANTA, GEORGIA
CITY OF ATLANTA
DEPARTMENT OF WATERSHED MANAGEMENT

EAST AREA WATER QUALITY CONTROL FACILITY IMPROVEMENTS

W.01.02.0085

SHEET TITLE

CONDUIT SCHEDULE NO. 3

DATE: JULY 2019
PROJECT NO.: GABPA134
DESIGNED BY: S. PATEL
DRAWN BY: J. BROWN
CHECKED BY: I. GONZALEZ

SCALE: X" = XX'

E-041

SHEET 121 OF 150

User: TTHOMAS Spec: AUS-NCSM0D File: \\ACAD\PROJ\GABPA134 - CSO GROUP 1\BID PACKAGE 2\SHEETS\ELECTRICAL\E-041.DWG Scale: 1:1 SavedDate: 7/30/2019 Time: 17:53 Plot Date: Thomas, Travis; 7/31/2019, 12:23 ; Layout: 121

TAG	CONDUIT	CABLE								EQUIPMENT FROM		EQUIPMENT TO		REMARKS
		POWER		GROUND		CONTROL		INSTR.	VOLTAGE	TAG NUMBER	NAME	TAG NUMBER	NAME	
	SIZE (IN)	QTY	SIZE	QTY	SIZE	QTY	SIZE							
AREA 82: SOLIDS PROCESSING BUILDING														
P2003	REFER TO DUCT BANK DETAIL FOR INFORMATION								480	MCC-SDB	MOTOR CONTROL CENTER	DP-SB	DISTRIBUTION PANEL	
P2004	REFER TO DUCT BANK DETAIL FOR INFORMATION									CP-BFP	BFP LOCAL CONTROL PANEL	CP-BFP-RIO	BFP REMOTE I/O CONTROL PANEL	
P1201	3/4"	3	#12	1	#12				480	DP-SB	DISTRIBUTION PANEL	GPP 1	GRINDER PUMP PANEL 1	LOCAL CONTROL PANEL
P1201A	3/4"	3	#12	1	#12				480	GPP 1	GRINDER PUMP PANEL 1	82P3612	GRINDER PUMP	
P1202	3/4"	3	#12	1	#12				480	DP-SB	DISTRIBUTION PANEL	GPP 2	GRINDER PUMP PANEL 2	LOCAL CONTROL PANEL
P1202A	3/4"	3	#12	1	#12				480	GPP 2	GRINDER PUMP PANEL 2	82P3614	GRINDER PUMP	
P1203	3/4"	3	#10	1	#10				480	DP-SB	DISTRIBUTION PANEL		BFP FEED PUMP NO.1 VFD	TO VFD
P1203A	3/4"	3	#10	1	#10				480		BFP FEED PUMP NO.1 VFD	82P3602	BFP FEED PUMP NO.1	
P1204	3/4"	3	#10	1	#10				480	DP-SB	DISTRIBUTION PANEL		BFP FEED PUMP NO.2 VFD	TO VFD
P1204A	3/4"	3	#10	1	#10				480		BFP FEED PUMP NO.2 VFD	82P3604	BFP FEED PUMP NO.2	
P1205	1-1/2"	4	#3	1	#8				480	DP-SB	DISTRIBUTION PANEL	HSB	480/277V PANEL	
P1205A	3/4"	3	#10	1	#10				480	HSB	480/277V PANEL	TX-LSB	480-120/208V 9KVA XFMR	
P1205B	3/4"	4	#8	1	#10				208	TX-LSB	480-120/208V XFMR	LSB	120/208V PANEL	
P1206	3/4"	2	#12	1	#12				120	LSB	120/208V PANEL	-	RECEPTACLES	
P1207	3/4"	2	#12	1	#12				120	LSB	120/208V PANEL	-	LIGHTS-PUMP AREA	
P1208	3/4"	2	#12	1	#12				120	LSB	120/208V PANEL	-	EMERGENCY LIGHTS	
P1209	3/4"	2	#12	1	#12				120	LSB	120/208V PANEL	-	LIGHTS-MEZZANINE	
P1210	3/4"	2	#12	1	#12				120	LSB	120/208V PANEL	EF-1	EXHAUST FAN #1	
P1211	1- 1/4"	3	#3	1	#3				480	HSB	480/277V PANEL	AHU-1	AIR HANDLING UNIT #1	VIA DISCONNECT SWITCH
P1213	3/4"	3	#12	1	#12				480	HSB	480/277V PANEL	T1 XFMR	480-120/208V STEP DOWN XFMR	
P1214	3/4"	3	#12	1	#12				480	HSB	480/277V PANEL	-	HOIST	
P1215	1"	3	#8	1	#8				480	LSB	480/277V PANEL	CP-BFP-RIO	BELT FILTER PRESS REMOTE IO CONTROL PANEL	
P1216	1"	3	#8	1	#8				480	HSB	480/277V PANEL	-	A/C VFD NO. 1	
P1217	1"	3	#8	1	#8				480	HSB	480/277V PANEL	-	A/C VFD NO. 2	
C1201	1"			1	#14	12	#14			CP-BFP-RIO	BELT FILTER PRESS REMOTE IO CONTROL PANEL	GPP 1	GRINDER PUMP PANEL 1	LOCAL CONTROL PANEL
C1202	1"			1	#14	12	#14			CP-BFP-RIO	BELT FILTER PRESS REMOTE IO CONTROL PANEL	GPP 2	GRINDER PUMP PANEL 2	LOCAL CONTROL PANEL

TAG	CONDUIT	CABLE								EQUIPMENT FROM		EQUIPMENT TO		REMARKS
		POWER		GROUND		CONTROL		INSTR.	VOLTAGE	TAG NUMBER	NAME	TAG NUMBER	NAME	
	SIZE (IN)	QTY	SIZE	QTY	SIZE	QTY	SIZE							
AREA 82: SOLIDS PROCESSING BUILDING														
C1203	1"			1	#14	16	#14			CP-BFP-RIO	BELT FILTER PRESS REMOTE IO CONTROL PANEL	82P3602	BFP FEED PUMP NO.1 VFD	TO VFD
C1203A	1"			1	#14	4	#14			82P3602	BFP FEED PUMP NO.1 VFD		TERMINAL BOX	
C1203B	1"			1	#14	2	#14				TERMINAL BOX		PSH 3602	
C1203C	1"			1	#14	2	#14				TERMINAL BOX		PSL 3602	
C1204	1"			1	#14	16	#14			CP-BFP-RIO	BELT FILTER PRESS REMOTE IO CONTROL PANEL	82P3604	BFP FEED PUMP NO.2 VFD	TO VFD
C1204A	1"			1	#14	4	#14			82P3604	BFP FEED PUMP NO.2 VFD		TERMINAL BOX	
C1204B	1"			1	#14	2	#14				TERMINAL BOX		PSH 3604	
C1204C	1"			1	#14	2	#14				TERMINAL BOX		PSL 3604	
C1205	1"			1	#14	2	#14			CP-BFP-RIO	BELT FILTER PRESS REMOTE IO CONTROL PANEL	EF-1	EF-1 MAGNETIC STARTER PANEL	
C1205A	1"			1	#14	2	#14			EF-1	EF-1 MAGNETIC STARTER PANEL	AHU-1	AIR HANDLING UNIT #1	
C1207	1"			1	#14	2	#14			82P3602	BFP FEED PUMP NO.1 VFD	GPP 1	GRINDER PUMP PANEL 1	LOCAL CONTROL PANEL
C1208	1"			1	#14	2	#14			82P3604	BFP FEED PUMP NO.2 VFD	GPP 2	GRINDER PUMP PANEL 2	LOCAL CONTROL PANEL
C1209	1"			1	#14	4	#14 2 TSP			T-1	ROOM THERMOSTAT	AHU-1	AIR HANDLING UNIT #1	
S1201	1"			1	#14		3 TSP			CP-BFP-RIO	BELT FILTER PRESS REMOTE IO CONTROL PANEL	82P3602	BFP FEED PUMP NO.1 VFD	TO VFD
S1202	1"			1	#14		3 TSP			CP-BFP-RIO	BELT FILTER PRESS REMOTE IO CONTROL PANEL	82P3604	BFP FEED PUMP NO.2 VFD	TO VFD

COPYRIGHT:
ARCADIS U.S., INC.
2016

IF THIS BAR IS NOT 1" INDICATED SCALE IS INCORRECT

NO.	DATE	ISSUED FOR	BY
0	JUL 2019	BIDDING	HG

SEALS

GEORGIA REGISTERED No. 013444 PROFESSIONAL ENGINEER IVAN M. GONZALEZ July 31, 2019

ARCADIS BPA
A Joint Venture
2839 Paces Ferry Road
Suite 900
Atlanta, GA 30339
Tel: 770-431-8666
Fax: 770-435-2666
www.arcadis-us.com

ATLANTA, GEORGIA
CITY OF ATLANTA
DEPARTMENT OF WATERSHED MANAGEMENT

EAST AREA WATER QUALITY CONTROL FACILITY IMPROVEMENTS

W.01.02.0085

SHEET TITLE

CONDUIT SCHEDULE NO. 4

DATE: JULY 2019
PROJECT NO.: GABPA134
DESIGNED BY: S. PATEL
DRAWN BY: J. BROWN
CHECKED BY: I. GONZALEZ

SCALE: X" = XX'

E-042

SHEET 122 OF 150

User:THOMAS Spec:AUS-NCSMOD File:I:\ACAD\PROJ\GABPA134 - CSO GROUP 1\BID PACKAGE 2\SHEETS\ELECTRICAL\E-042.DWG Scale:1:1 SavedDate:7/30/2019 Time:15:47 Plot Date: Thomas, Travis; 7/31/2019; 12:24 ; Layout:122

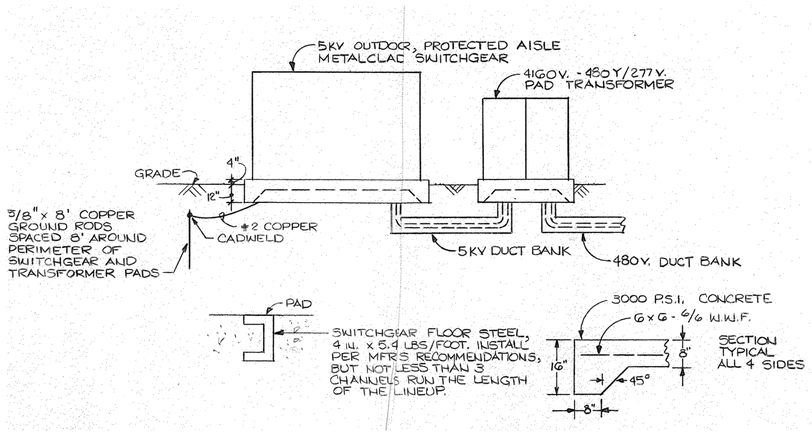

SWITCHGEAR AND PAD TRANSFORMER FOUNDATIONS

SCALE: N.T.S.

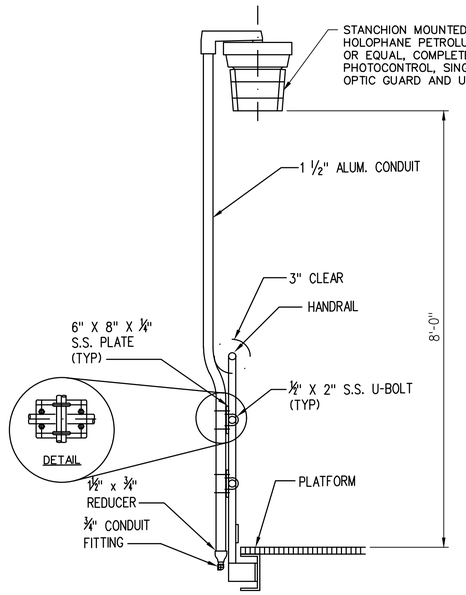

TYPICAL STANCHION MOUNTED LUMINAIRE DETAIL

SCALE: NTS

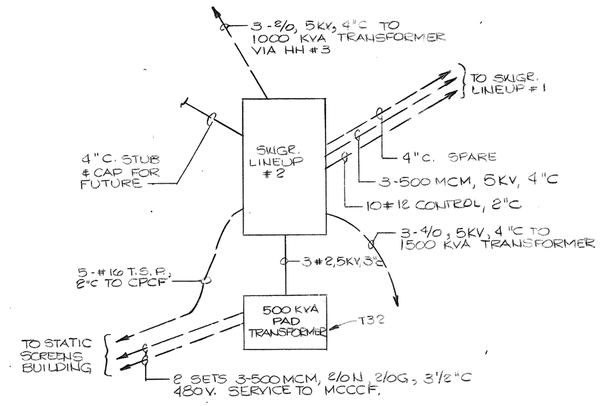

4160V. SWITCHGEAR LINEUP #2 DUCT BANK SCHEDULE

SCALE: N.T.S.

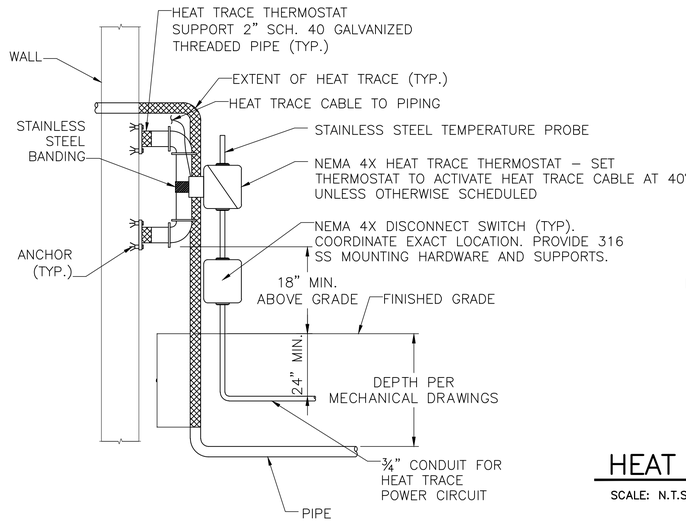

HEAT TRACE EQUIPMENT MOUNTING DETAIL (TYP.)

SCALE: N.T.S.

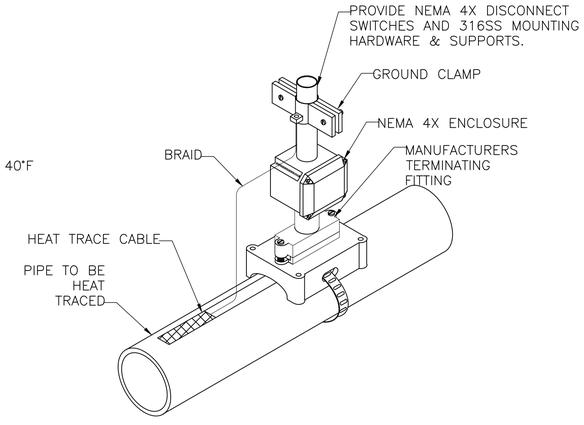

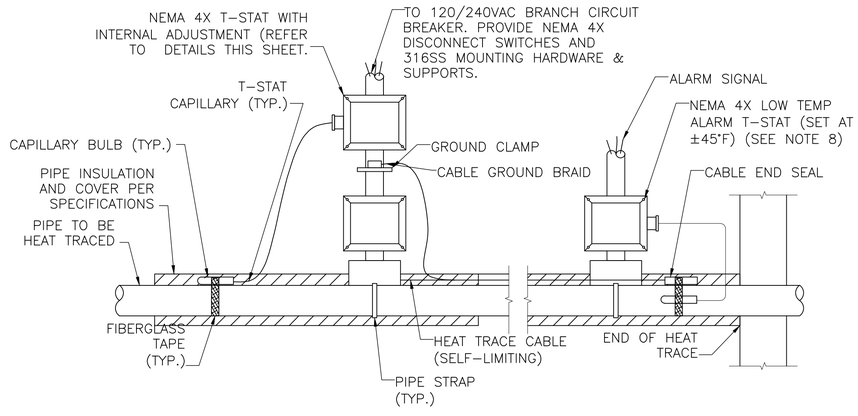

TYPICAL HEAT TRACE INSTALLATION DETAIL

SCALE: N.T.S.

User:THOMAS Spec:AUS-NCSMOD File:I:\ACAD\PROJ\GABPA134 - CSO GROUP 1\BID PACKAGE 2\SHEETS\ELECTRICAL\E-043.DWG Scale:1:1 SavedDate:2/26/2019 Time:20:36 Plot Date: Thomas, Travis: 7/31/2019; 12:26 ; Layout:123

COPYRIGHT: ARCADIS U.S., INC. 2016

IF THIS BAR IS NOT 1" INDICATED SCALE IS INCORRECT

NO.	DATE	ISSUED FOR	BY
0	JUL 2019	BIDDING	HG

SEALS

GEORGIA REGISTERED No. 013444 PROFESSIONAL ENGINEER IVAN M. GONZALEZ July 31, 2019

ARCADIS BPA A Joint Venture
2839 Paces Ferry Road
Suite 900
Atlanta, GA 30339
Tel: 770-431-8666
Fax: 770-435-2666
www.arcadis-us.com

ATLANTA, GEORGIA
CITY OF ATLANTA
DEPARTMENT OF WATERSHED MANAGEMENT

EAST AREA WATER QUALITY CONTROL FACILITY IMPROVEMENTS

W.01.02.0085

SHEET TITLE

ELECTRICAL DETAILS 1

DATE:	JULY 2019
PROJECT NO.:	GABPA134
DESIGNED BY:	S. PATEL
DRAWN BY:	J. BROWN
CHECKED BY:	I. GONZALEZ

SCALE: NONE

E-043

SHEET 123 OF 150

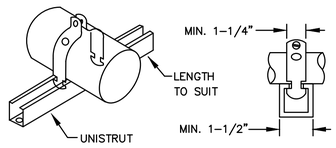

CONDUIT SUPPORT DETAIL

SCALE: NTS

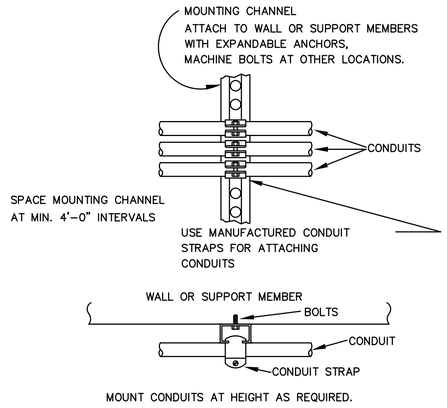

MOUNT CONDUITS AT HEIGHT AS REQUIRED.

CONDUIT MOUNTING DETAIL

USE FOR TWO OR MORE CONDUITS RUN PARALLEL

SCALE: NTS

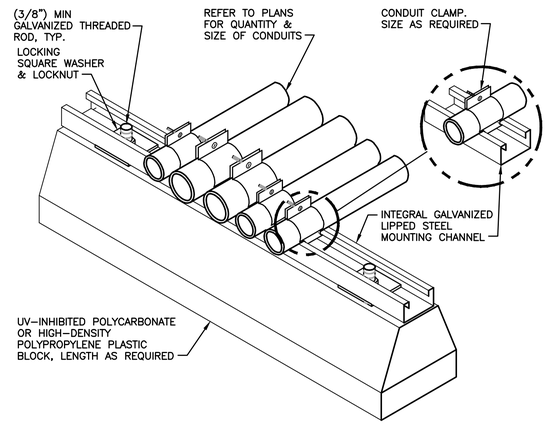

ROOF CONDUIT SUPPORT DETAIL

SCALE: NTS

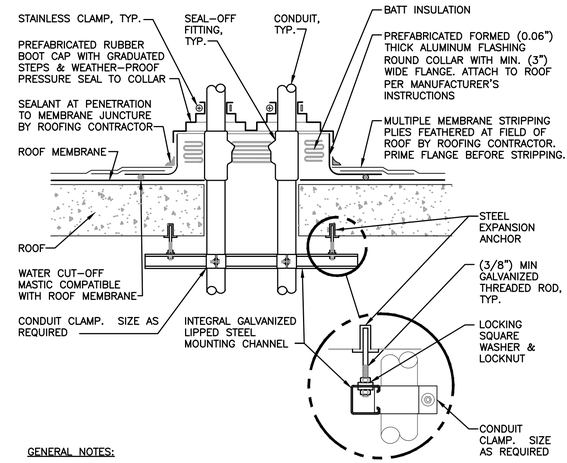

GENERAL NOTES:

1. MAINTAIN A MINIMUM CLEARANCE OF (12") ON ALL SIDES OF ROOF PENETRATION FROM WALLS, CURBS, AND OTHER PROJECTIONS TO FACILITATE PROPER FLASHING.
2. FLANGES OF ADJACENT FLASHINGS SHALL NOT BE CUT OR OVERLAPPED.
3. VERIFY ROOF & STRUCTURAL SYSTEM WITH ARCHITECT.
4. COORDINATE FLASHING INSTALLATION WITH ROOFING CONTRACTOR TO ENSURE PROPER METHODS & MATERIALS ARE USED TO MAINTAIN ROOF WARRANTY.

CONDUIT ROOF PENETRATION DETAIL

SCALE: NTS

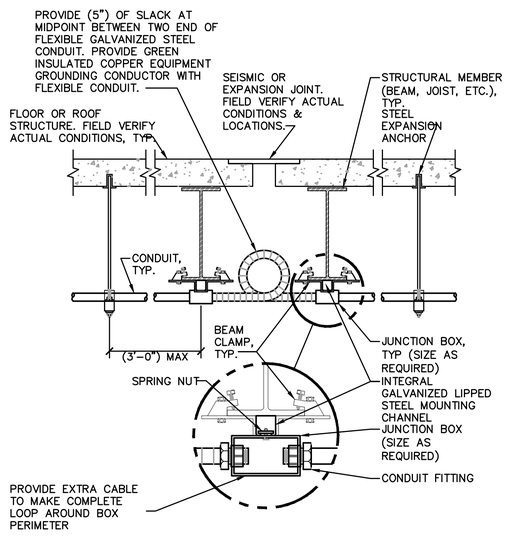

CONDUIT EXPANSION JOINT CROSSING DETAIL FLEXIBLE CONDUIT

SCALE: NTS

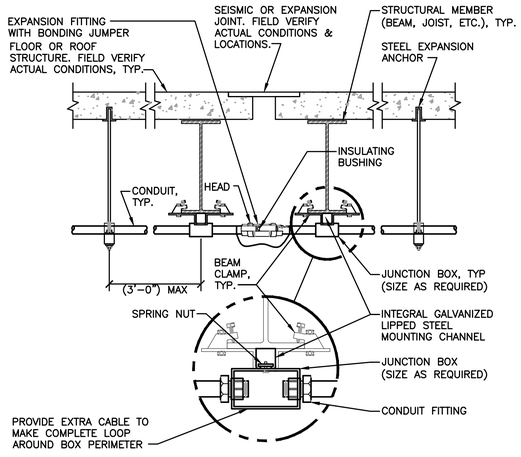

CONDUIT EXPANSION JOINT CROSSING DETAIL EXPANSION FITTING

SCALE: NTS

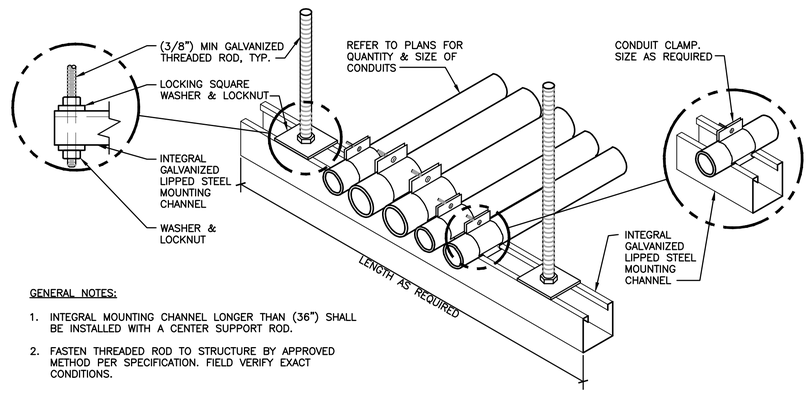

GENERAL NOTES:

1. INTEGRAL MOUNTING CHANNEL LONGER THAN (36") SHALL BE INSTALLED WITH A CENTER SUPPORT ROD.
2. FASTEN THREADED ROD TO STRUCTURE BY APPROVED METHOD PER SPECIFICATION. FIELD VERIFY EXACT CONDITIONS.

CONDUIT TRAPEZE MOUNTING DETAIL

SCALE: NTS

COPYRIGHT: ARCADIS U.S., INC. 2016

IF THIS BAR IS NOT 1" INDICATED SCALE IS INCORRECT

NO.	DATE	ISSUED FOR	BY
0	JUL 2019	BIDDING	HG

SEALS

GEORGIA REGISTERED No. 013444 PROFESSIONAL ENGINEER IVAN M. GONZALEZ July 31, 2019

ARCADIS A Joint Venture
BPA
2839 Paces Ferry Road
Suite 900
Atlanta, GA 30339
Tel: 770-431-8666
Fax: 770-435-2666
www.arcadis-us.com

ATLANTA, GEORGIA
CITY OF ATLANTA
DEPARTMENT OF WATERSHED MANAGEMENT

EAST AREA WATER QUALITY CONTROL FACILITY IMPROVEMENTS

W.01.02.0085

SHEET TITLE

ELECTRICAL DETAILS 2

DATE:	JULY 2019
PROJECT NO.:	GABPA134
DESIGNED BY:	S. PATEL
DRAWN BY:	J. BROWN
CHECKED BY:	I. GONZALEZ

SCALE: NONE

E-044

SHEET 124 OF 150

User:TTHOMAS Spec:AUS-NCSMOD File:I:\ACAD\PROJ\GABPA134 - CSO GROUP 1\BID PACKAGE 2\SHEETS\ELECTRICAL\E-044.DWG Scale:1:1 SavedDate:2/26/2019 Time:20:38 Plot Date: Thomas, Travis; 7/31/2019; 12:27 ; Layout:124

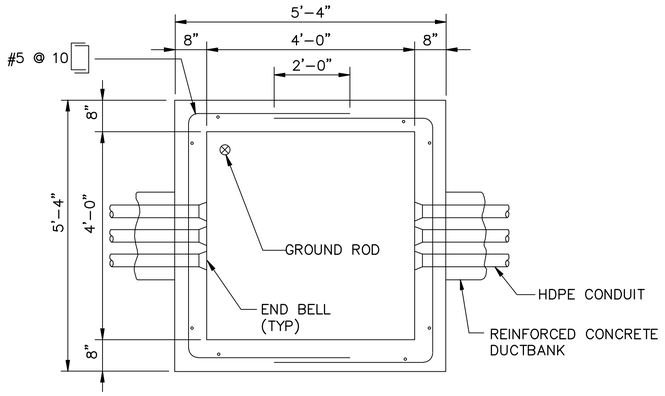

4'-0" SQUARE HANDHOLE DETAIL

SCALE: NTS

NOTE:
ALL MANHOLES AND HANDHOLES LOCATED IN (CAR AND TRUCK) TRAFFIC AREAS SHALL HAVE COVERS RATED FOR HS 20 LOADING.

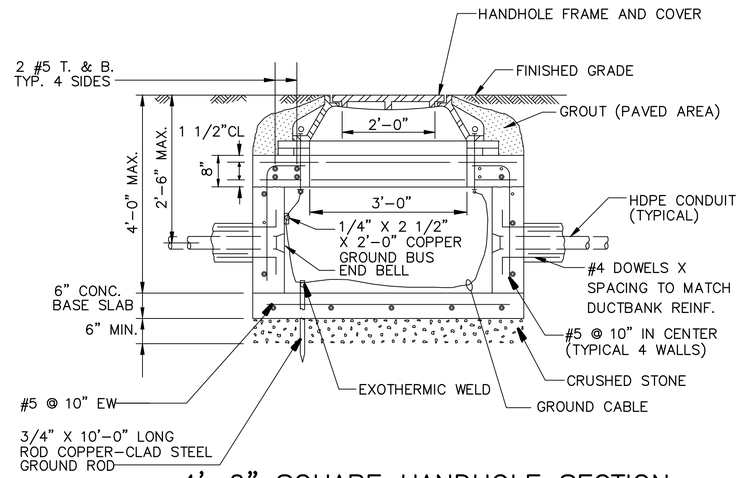

4'-0" SQUARE HANDHOLE SECTION

SCALE: NTS

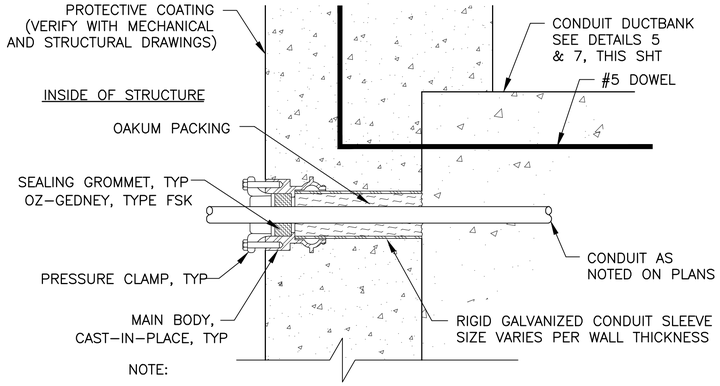

SINGLE ENDED TYPE CONDUIT SEAL DETAIL

SCALE: NTS

(FOR USE WHERE CONDUIT OUTSIDE THE STRUCTURE IS ENCASED IN CONCRETE)

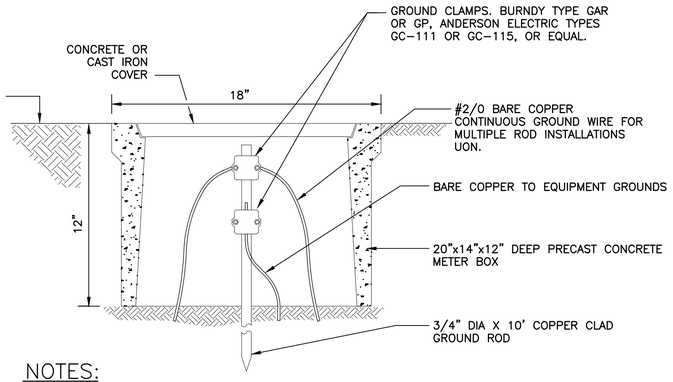

NOTES:

1. COVER SHALL BE INSCRIBED WITH THE WORD "GROUND" IN LETTERS.
2. DIMENSIONS ARE IN INCHES.

GROUND ROD AND WELL

SCALE: NTS

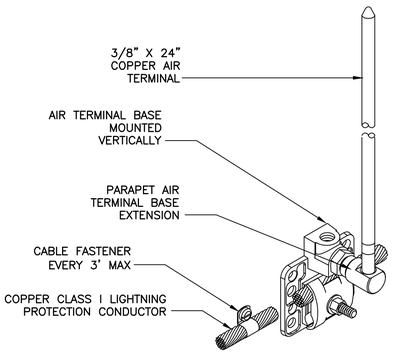

TYPE 'A' AIR TERMINAL BASE DETAIL

SCALE: NTS

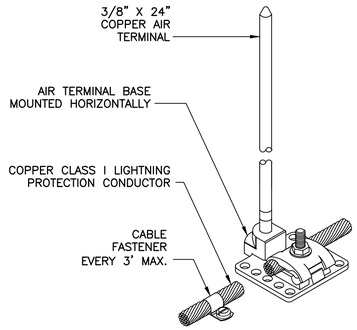

TYPE 'B' AIR TERMINAL BASE DETAIL

SCALE: NTS

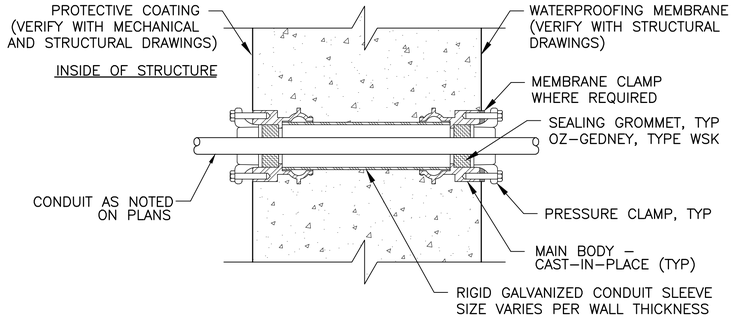

DOUBLE ENDED TYPE CONDUIT SEAL DETAIL

SCALE: NTS

(FOR USE WHERE CONDUIT OUTSIDE THE STRUCTURE IS NOT ENCASED IN CONCRETE)

User: TTHOMAS Spec: AUS--NCSMOD File: I:\ACAD\PROJ\GABPA134 - CSO GROUP 1\BID PACKAGE 2\SHEETS\ELECTRICAL\E-045.DWG Scale: 1:1 Saved Date: 2/26/2019 Time: 20:38 Plot Date: Thomas, Travis; 7/31/2019; 12:28 ; Layout:125

COPYRIGHT:
ARCADIS U.S., INC.
2016

IF THIS BAR IS NOT 1" INDICATED SCALE IS INCORRECT

NO.	DATE	ISSUED FOR	BY
0	JUL 2019	BIDDING	HG

SEALS

GEORGIA REGISTERED No. 013444 PROFESSIONAL ENGINEER IVAN M. GONZALEZ July 31, 2019

ARCADIS
BPA
A Joint Venture
2839 Paces Ferry Road
Suite 900
Atlanta, GA 30339
Tel: 770-431-8666
Fax: 770-435-2666
www.arcadis-us.com

ATLANTA, GEORGIA
CITY OF ATLANTA
DEPARTMENT OF WATERSHED MANAGEMENT

EAST AREA WATER QUALITY CONTROL FACILITY IMPROVEMENTS

W.01.02.0085

SHEET TITLE

ELECTRICAL DETAILS 3

DATE:	JULY 2019
PROJECT NO.:	GABPA134
DESIGNED BY:	S. PATEL
DRAWN BY:	J. BROWN
CHECKED BY:	I. GONZALEZ

SCALE: NONE

E-045

SHEET 125 OF 150

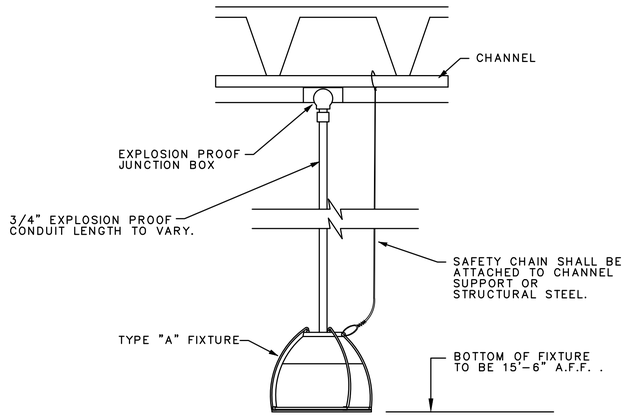

TYPICAL PENDANT MOUNTED LUMINAIRE DETAIL

SCALE: NTS

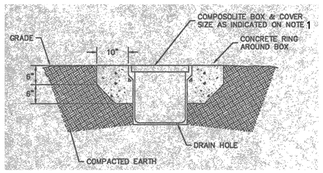

PULL BOX INSTALLATION IN COMPACTED EARTH

SCALE: NTS

NOTES:

1. FURNISH AND INSTALL UNDERGROUND PULLBOXES APPROXIMATELY EVERY 500 FEET FROM CSCF TO FIELD INSTRUMENTS. PULL BOXES SHALL BE COMPOSOLITE WITH BASE AS MANUFACTURED BY "QUAZITE" OR APPROVED EQUAL. BOXES AND COVERS SHALL BE CONCRETE GRAY AND SUSTAIN A LOAD OF 1500 POUNDS OVER A 10" SQUARE. BOX SIZE SHALL BE 12"Wx18"Lx18"D WITH GASKETED HEAVY-DUTY COVER. STAINLESS STEEL SCREWS AND "ELECTRIC" LOGO ON COVER; CATALOG NUMBER PC 1118DG18 DRILL 3/4" DRAIN HOLE IN BOX BASE.

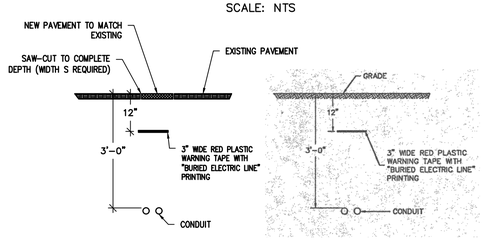

SECTION BURIED CONDUIT

SCALE: NTS

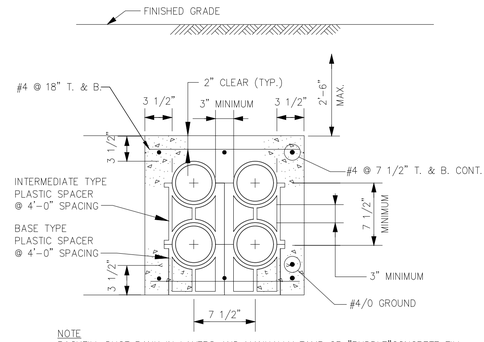

NOTE
BACKFILL DUCT BANK IN LAYERS AND MANUALLY TAMP OR "PUDDLE"CONCRETE FILL. PROVIDE YELLOW DUCT BANK MARKER TAPES, READING "CAUTION – ELECTRICAL LINES BELOW", OVER ENTIRE LENGTH OF DUCTLINE. LOCATE TAPES 12 INCHES BELOW GRADE. PROVIDE A TAPE FOR EVERY 12 INCHES OF WIDTH OF DUCTLINE.

DUCTBANK SECTION

SCALE: NTS

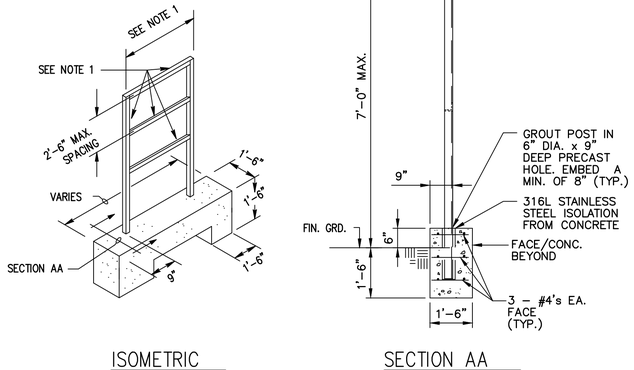

ISOMETRIC

SECTION AA

NOTES FOR ELECTRICAL EQUIPMENT RACK:

1. COORDINATE W/SHOP DWGS. OF EQUIP. USED. MAX. HORIZ. SPAN SHALL BE 5'-0" WITHOUT ADDITIONAL VERT. SUPPORTS.
2. FABRICATE FROM ALUMINUM WELDED CONSTRUCTION.

EQUIPMENT RACK DETAIL

SCALE: NTS

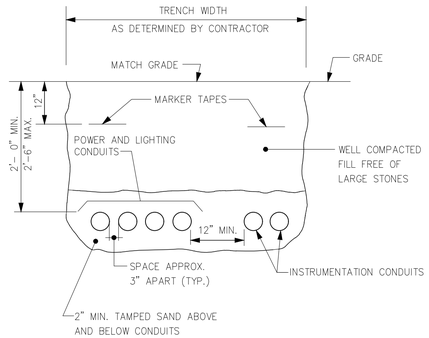

UNDERGROUND CONDUIT TRENCH FOR MULTIPLE CONDUITS

SCALE: NTS

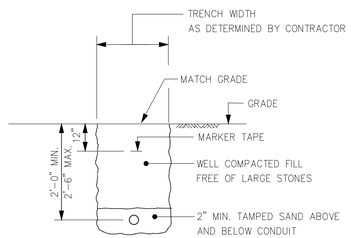

UNDERGROUND CONDUIT TRENCH FOR SINGLE CONDUITS

SCALE: NTS

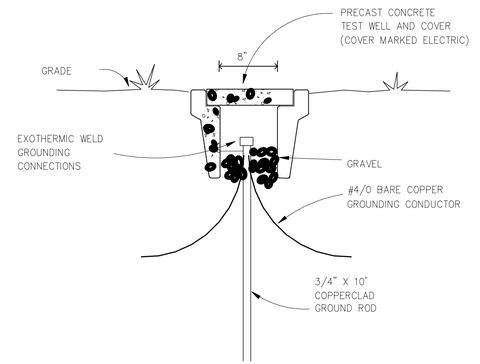

GROUND TEST WELL

SCALE: NTS

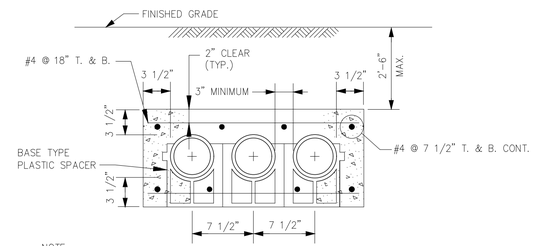

NOTE
BACKFILL DUCT BANK IN LAYERS AND MANUALLY TAMP OR "PUDDLE" CONCRETE FILL. PROVIDE YELLOW DUCT BANK MARKER TAPES, READING "CAUTION – ELECTRICAL LINES BELOW", OVER ENTIRE LENGTH OF DUCTLINE. LOCATE TAPES 12 INCHES BELOW GRADE. PROVIDE A TAPE FOR EVERY 12 INCHES OF WIDTH OF DUCTLINE.

SINGLE LAYER DUCTBANK SECTION

SCALE: NTS

User:THOMAS Spec:AUS-NCSMOD File:I:\ACAD\PROJ\GABPA134 – CSO GROUP 1\BID PACKAGE 2\SHEETS\ELECTRICAL\E-046.DWG Scale:1:1 SavedDate:2/26/2019 Time:20:37 Plot Date: Thomas, Travis: 7/31/2019; 12:29 ; Layout:126

COPYRIGHT: ARCADIS U.S., INC. 2016

IF THIS BAR IS NOT 1" INDICATED SCALE IS INCORRECT

NO.	DATE	ISSUED FOR	BY
0	JUL 2019	BIDDING	HG

SEALS

GEORGIA REGISTERED No. 013444 PROFESSIONAL ENGINEER IVAN M. GONZALEZ July 31, 2019

ARCADIS BPA A Joint Venture
2839 Paces Ferry Road
Suite 900
Atlanta, GA 30339
Tel: 770-431-8666
Fax: 770-435-2666
www.arcadis-us.com

RESURGENS 1870 ATLANTA, GA 2001 ®

ATLANTA, GEORGIA
CITY OF ATLANTA
DEPARTMENT OF WATERSHED MANAGEMENT

EAST AREA WATER QUALITY CONTROL FACILITY IMPROVEMENTS

W.01.02.0085

SHEET TITLE

ELECTRICAL DETAILS 4

DATE:	JULY 2019
PROJECT NO.:	GABPA134
DESIGNED BY:	S. PATEL
DRAWN BY:	J. BROWN
CHECKED BY:	I. GONZALEZ

SCALE: NONE

E-046

SHEET 126 OF 150

MEANINGS OF IDENTIFICATION LETTERS

THIS TABLE APPLIES ONLY TO THE FUNCTIONAL IDENTIFICATION OF INSTRUMENTS

	FIRST LETTER		SUCCEEDING LETTERS		
	MEASURED OR INITIATING VARIABLE	MODIFIER	READOUT OR PASSIVE FUNCTION	OUTPUT FUNCTION	MODIFIER
A	ANALYSIS	ANALOG	ALARM		
B	BURNER FLAME		USER'S CHOICE	CLOSE, STOP, OR DEC.	USER'S CHOICE
C	CONDUCTIVITY (ELECTRICAL)			CONTROL	
D	DENSITY (MASS) OR SPECIFIC GRAVITY	DIFFERENTIAL OR DIGITAL		OPEN, START OR INC.	
E	VOLTAGE (EMF)		PRIMARY ELEMENT		
F	FLOW RATE	RATIO (FRACTION)			FAIL
G	GATE		GLASS		
H	HAND (MANUALLY INITIATED)				HIGH OR OPENED
I	CURRENT (ELECTRICAL)		INDICATE OR INPUT		
J	POWER	SCAN			
K	TIME OR TIME SCHEDULE			CONTROL STATION	
L	LEVEL		LIGHT (PILOT)		LOW OR CLOSED
M	MOTOR, MOTION				MIDDLE OR INTERMEDIATE
N	USER'S CHOICE		USER'S CHOICE	USER'S CHOICE	ON OR OPERATE
O	POSITION		ORIFICE (RESTRICTION)		OVERLOAD
P	PRESSURE OR VACUUM		POINT (TEST CONNECTION)		
Q	QUANTITY OR EVENT	INTEGRATE OR TOTALIZE			
R	RADIOACTIVITY	RELIEF	RECORD OR PRINT		
S	SPEED OR FREQUENCY	SAFETY		SWITCH	
T	TEMPERATURE			TRANSMIT	
U	MULTIVARIABLE		MULTIFUNCTION	MULTIFUNCTION	MULTIFUNCTION
V	VALVE, DAMPER OR LOUVER			VALVE, DAMPER OR LOUVER	
W	WEIGHT OR FORCE		WELL		
X	UNCLASSIFIED		UNCLASSIFIED	UNCLASSIFIED	UNCLASSIFIED
Y	COMPUTER			RELAY OR COMPUTE	
Z	POSITION			DRIVE, ACTUATE OR UNCLASSIFIED FINAL CONTROL ELEMENT	

THE FOLLOWING DESIGNATIONS ARE USED TO BETTER IDENTIFY AN INSTRUMENT CONTROL FUNCTION

I/P	CURRENT TO PNEUMATIC CONVERTER	pH	HYDROGEN ION CONCENTRATION
E/I	VOLTAGE TO CURRENT CONVERTER	LCP	LOCAL CONTROL PANEL
I/I	CURRENT TO CURRENT CONVERTER	(I)	FURNISHED BY INSTRUMENTATION
DO	DISSOLVED OXYGEN	(M)	FURNISHED BY MECHANICAL
CL	CHLORINE RESIDUAL	(E)	FURNISHED BY ELECTRICAL
		(O)	FURNISHED BY OTHERS

INTERFACE SYMBOLS

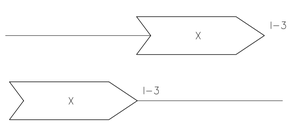

X PROCESS CONTINUATION DESTINATION DESCRIPTION

I-3 DESTINATION DRAWINGS NO.

X PROCESS CONTINUATION SOURCE DESCRIPTION

SYMBOLS

VALVES

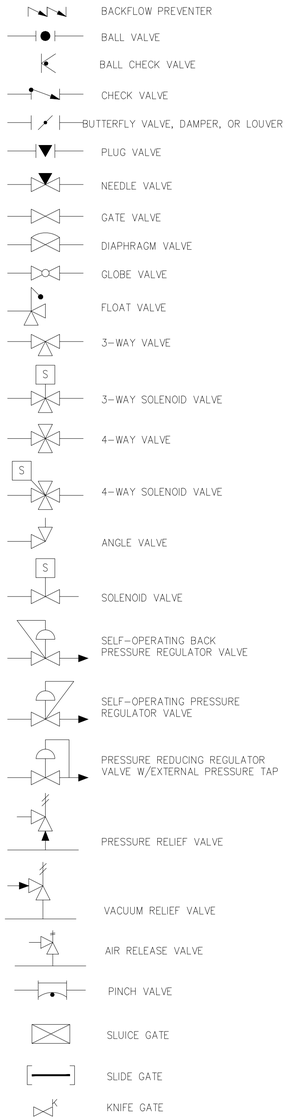

ACTUATORS

VALVES SHOWN WITHOUT ACTUATORS ARE MANUALLY OPERATED

EQUIPMENT

INSTRUMENTS

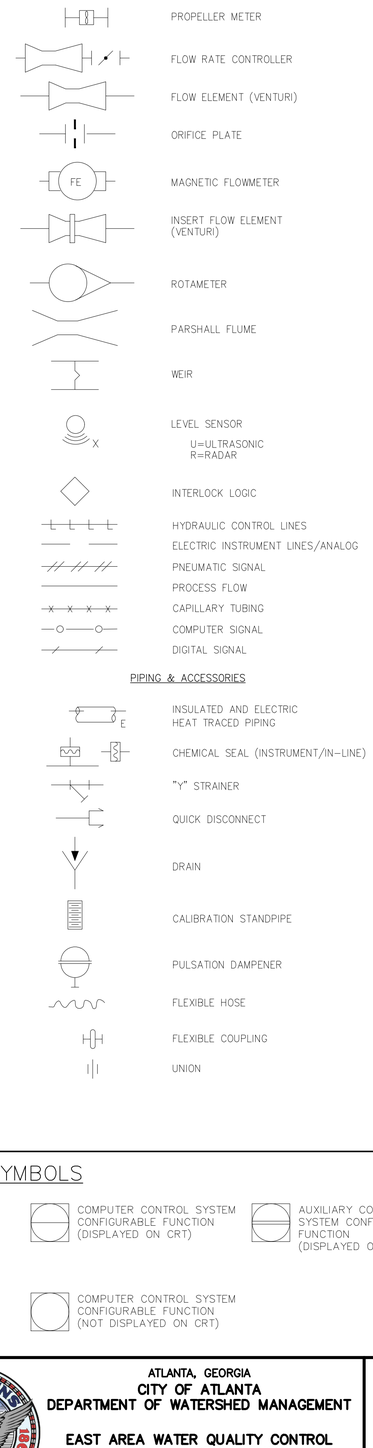

PIPING & ACCESSORIES

INSTRUMENT SYMBOLS

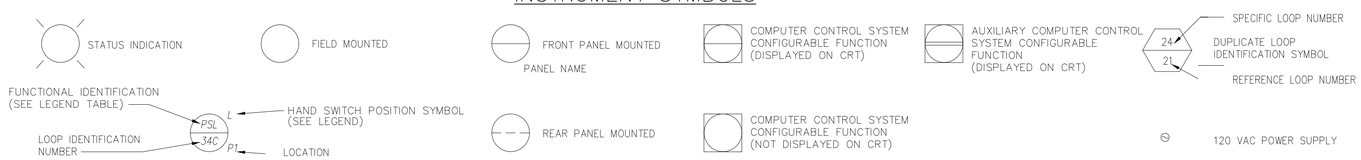

PIPING ABBREVIATIONS

BA	BACKWASH AIR
CMD	CHEMICAL DRAIN
CLS	CHLORINE SOLUTION
CPVC	CHLORINATED POLYVINYL CHLORIDE PIPE
CSO	CSO INFLUENT
CW	COLD WATER
DR	DRAIN
DTO	DETRITUS TANK OVERFLOW
FCL	FERRIC CHLORIDE
FEFF	FINAL EFFLUENT
GR	GRIT
HYD	HYDRAULIC FLUID
HW	HOT WATER
NaOCL	SODIUM HYPOCHLORITE
NBS	SODIUM BISULFITE
OF	OVERFLOW
PD	PUMPED DRAINAGE
PS	PRESSURE SWITCH
POL	POLYMER
REC	RECIRCULATION
SAN	SANITARY SEWER
SBE	SEDIMENTATION BASIN EFFLUENT
SFW	SOFTENED WATER
SG	SIGHT GLASS
SL	SLUDGE
SW	SEAL WATER
TS	THICKENED SLUDGE
VAC	VACUUM
VT	VENT
W1	WATER (POTABLE)
W2	WATER (POTABLE-BACKFLOW PREVENTED)
W3	WATER (NON-POTABLE PLANT WATER)
WWW	WASTE WASHWATER

PIPE MATERIALS

CP	COPPER
DI	DUCTILE IRON
PE	POLYETHELENE
PVC	POLYVINYL CHLORIDE
RCP	REINFORCED CONCRETE
SS	304 STAINLESS STEEL
STL	CARBON STEEL
TR	TROUGH

GENERAL NOTES

1. COMPONENTS AND PANELS SHOWN WITH A ( ) ARE SPECIFIED UNDER SECTION INSTRUMENTATION CONTROL AND MONITORING SYSTEM.
2. COMPONENTS AND PANELS SHOWN WITH A DOUBLE ASTERISK (**) ARE PART OF A PACKAGE SYSTEM; SEE EQUIPMENT SPECIFICATIONS.
3. THIS LEGEND IS PROJECT SPECIFIC. HOWEVER NOT ALL SYMBOLS MAY BE USED.
4. NOT ALL VALVES AND PIPING ARE SHOWN. REFER TO MECHANICAL DRAWINGS TO SEE COMPLETE PROCESS.

COMPUTER INPUT/ OUTPUT SYMBOLS

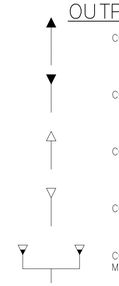

HAND SWITCH POSITION & SIGNAL SYMBOLS

(UNLABELLED SWITCHES ARE TO BE ON-OFF)

A	AUTOMATIC
C	CLOSE
CMD	COMMAND
F	FAST OR FORWARD
F/B	FEEDBACK
H	HAND
J	JOG
L	LOCAL
M	MANUAL
O	OPEN OR OFF
O/L	OVERLOAD
R	REMOTE OR REVERSE
E/S	EMERGENCY STOP
S/S	START/STOP
S	SLOW OR START

THESE SYMBOLS MAY BE COMBINED TO INDICATE MULTIPLE POSITION SELECTOR SWITCHES. E.G. L/O/R IS A LOCAL/OFF/REMOTE SELECTOR SWITCH.

EQUIPMENT LETTER PREFIX

G	GRINDER
P	PUMP
FLT	FILTER
MX	AGITATOR/MIXER
VS	VORTEX SEPARATOR
T	TANK
B	BLOWER
CON	CONVEYOR/CLASSIFIER
VFD	VARIABLE FREQUENCY DRIVE
LCS	LOCAL CONTRAL SYSTEM
BFP	BELT FILTER PRESS
POLY	POLYMER SYSTEM

PLANT AREA DESIGNATION

81	SLUDGE HOLDING TANK
82	SOLIDS PROCESSING PUMP STATION
83	DEWATERING BUILDING
93	TUNNEL PUMPING STATION
94	CHEMICAL BUILDING
95	VORTEX SEPARATOR
96	GRIT SETTLING BASIN & SEDIMENTATION BASIN
97	HIGH RATE FILTER
98	POST TREATMENT CHEMICALS

COPYRIGHT: ARCADIS U.S., INC. 2016

IF THIS BAR IS NOT 1" INDICATED SCALE IS INCORRECT

NO.	DATE	ISSUED FOR	BY
0	JUL 2019	BIDDING	HG

SEALS

GEORGIA REGISTERED No. PE039674 PROFESSIONAL ENGINEER 01/31/19

ARCADIS A Joint Venture
BPA
2839 Paces Ferry Road
Suite 900
Atlanta, GA 30339
Tel: 770-431-8666
Fax: 770-435-2666
www.arcadis-us.com

ATLANTA, GEORGIA
CITY OF ATLANTA
DEPARTMENT OF WATERSHED MANAGEMENT

EAST AREA WATER QUALITY CONTROL FACILITY IMPROVEMENTS

W.01.02.0085

SHEET TITLE

INSTRUMENTATION AND CONTROLS LEGEND AND GENERAL NOTES

DATE: JULY 2019
PROJECT NO.: GABPA134
DESIGNED BY: F. ARANGO
DRAWN BY: C. MARTINI
CHECKED BY: E. KOWALSKI

SCALE: NONE

I-001

SHEET 127 OF 150

User:TTHOMAS Spec:AUS-NCSMOD File:I:\ACAD\PROJ\GABPA134 - CSO GROUP 1\BID PACKAGE 2\SHEETS\INSTRUMENTATION\I-001.DWG Scale:1:1 SavedDate:5/31/2019 Time:14:29 Plot Date: Thomas, Travis; 7/31/2019; 13:06 ; Layout:127

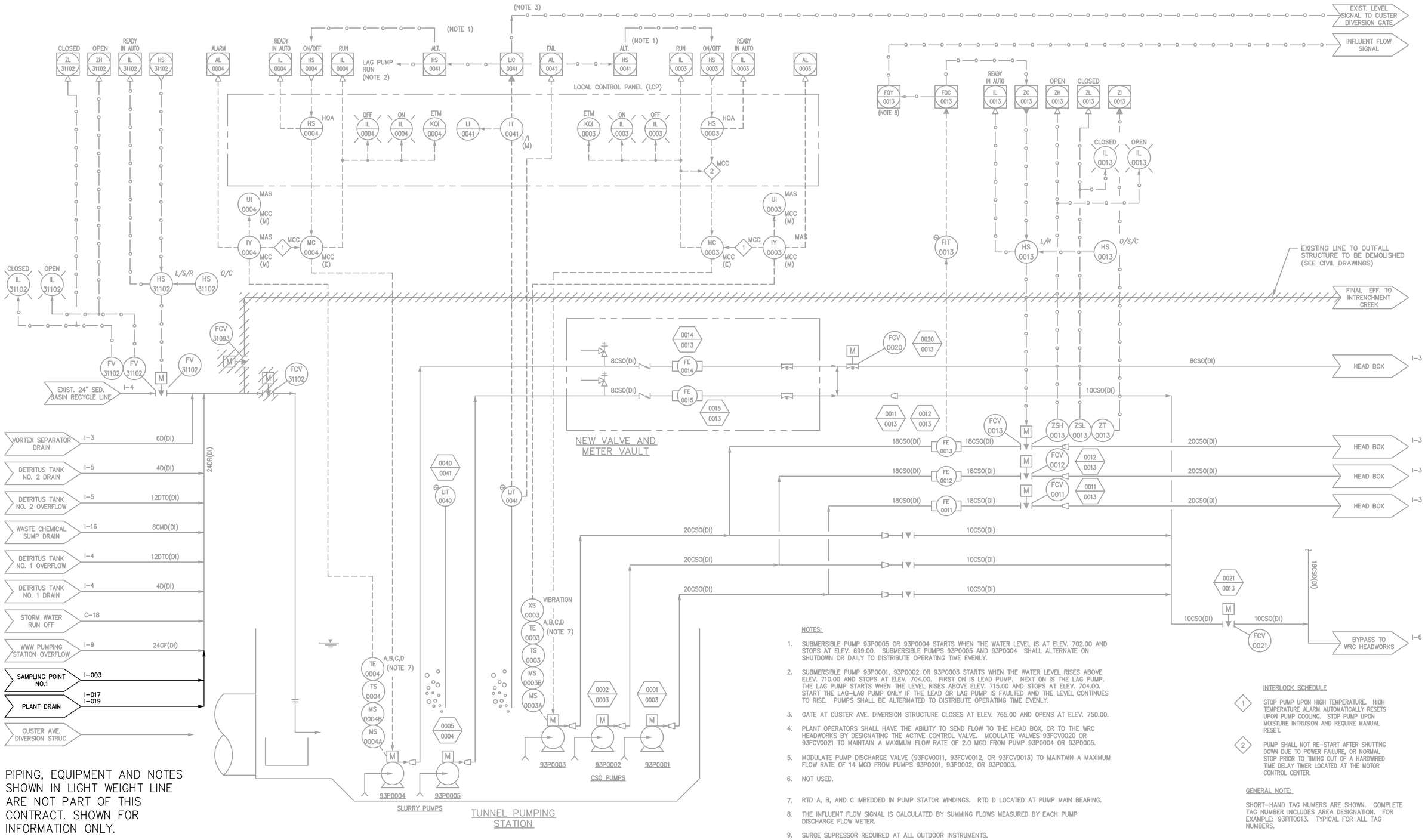

PIPING, EQUIPMENT AND NOTES SHOWN IN LIGHT WEIGHT LINE ARE NOT PART OF THIS CONTRACT. SHOWN FOR INFORMATION ONLY.

NOTES:

1. SUBMERSIBLE PUMP 93P0005 OR 93P0004 STARTS WHEN THE WATER LEVEL IS AT ELEV. 702.00 AND STOPS AT ELEV. 699.00. SUBMERSIBLE PUMPS 93P0005 AND 93P0004 SHALL ALTERNATE ON SHUTDOWN OR DAILY TO DISTRIBUTE OPERATING TIME EVENLY.
2. SUBMERSIBLE PUMP 93P0001, 93P0002 OR 93P0003 STARTS WHEN THE WATER LEVEL RISES ABOVE ELEV. 710.00 AND STOPS AT ELEV. 704.00. FIRST ON IS LEAD PUMP. NEXT ON IS THE LAG PUMP. THE LAG PUMP STARTS WHEN THE LEVEL RISES ABOVE ELEV. 715.00 AND STOPS AT ELEV. 704.00. START THE LAG-LAG PUMP ONLY IF THE LEAD OR LAG PUMP IS FAULTED AND THE LEVEL CONTINUES TO RISE. PUMPS SHALL BE ALTERNATED TO DISTRIBUTE OPERATING TIME EVENLY.
3. GATE AT CUSTER AVE. DIVERSION STRUCTURE CLOSES AT ELEV. 765.00 AND OPENS AT ELEV. 750.00.
4. PLANT OPERATORS SHALL HAVE THE ABILITY TO SEND FLOW TO THE HEAD BOX, OR TO THE WRC HEADWORKS BY DESIGNATING THE ACTIVE CONTROL VALVE. MODULATE VALVES 93FCV0020 OR 93FCV0021 TO MAINTAIN A MAXIMUM FLOW RATE OF 2.0 MGD FROM PUMP 93P0004 OR 93P0005.
5. MODULATE PUMP DISCHARGE VALVE (93FCV0011, 93FCV0012, OR 93FCV0013) TO MAINTAIN A MAXIMUM FLOW RATE OF 14 MGD FROM PUMPS 93P0001, 93P0002, OR 93P0003.
6. NOT USED.
7. RTD A, B, AND C IMBEDDED IN PUMP STATOR WINDINGS. RTD D LOCATED AT PUMP MAIN BEARING.
8. THE INFLUENT FLOW SIGNAL IS CALCULATED BY SUMMING FLOWS MEASURED BY EACH PUMP DISCHARGE FLOW METER.
9. SURGE SUPRESSOR REQUIRED AT ALL OUTDOOR INSTRUMENTS.

INTERLOCK SCHEDULE

1. STOP PUMP UPON HIGH TEMPERATURE. HIGH TEMPERATURE ALARM AUTOMATICALLY RESETS UPON PUMP COOLING. STOP PUMP UPON MOISTURE INTRUSION AND REQUIRE MANUAL RESET.
2. PUMP SHALL NOT RE-START AFTER SHUTTING DOWN DUE TO POWER FAILURE, OR NORMAL STOP PRIOR TO TIMING OUT OF A HARDWIRED TIME DELAY TIMER LOCATED AT THE MOTOR CONTROL CENTER.

GENERAL NOTE:

SHORT-HAND TAG NUMERS ARE SHOWN. COMPLETE TAG NUMBER INCLUDES AREA DESIGNATION. FOR EXAMPLE: 93FIT0013. TYPICAL FOR ALL TAG NUMBERS.

COPYRIGHT: ARCADIS U.S., INC. 2016

IF THIS BAR IS NOT 1" INDICATED SCALE IS INCORRECT

NO.	DATE	ISSUED FOR	BY
0	JUL 2019	BIDDING	HG

SEALS

GEORGIA REGISTERED No. PE039674 PROFESSIONAL ENGINEER 01/31/19

ARCADIS A Joint Venture
BPA
2839 Paces Ferry Road
Suite 900
Atlanta, GA 30339
Tel: 770-431-8666
Fax: 770-435-2666
www.arcadis-us.com

ATLANTA, GEORGIA
CITY OF ATLANTA
DEPARTMENT OF WATERSHED MANAGEMENT

EAST AREA WATER QUALITY CONTROL FACILITY IMPROVEMENTS

W.01.02.0085

SHEET TITLE

TUNNEL PUMP STATION DEWATERING P&ID

DATE:	JULY 2019
PROJECT NO.:	GABPA134
DESIGNED BY:	F. ARANGO
DRAWN BY:	C. MARTINI
CHECKED BY:	E. KOWALSKI

SCALE: NONE

I-002

SHEET 128 OF 150

User: TTHOMAS Spec: ALIS-NCSMOD File: I:\ACAD\PROJ\GABPA134 - CSO GROUP 1\BID PACKAGE 2\SHEETS\INSTRUMENTATION\I-002.DWG Scale:1:1/2 SavedDate:7/23/2019 Time:16:56 Plot Date: Thomas, Travis; 7/31/2019; 13:08 ; Layout:I28

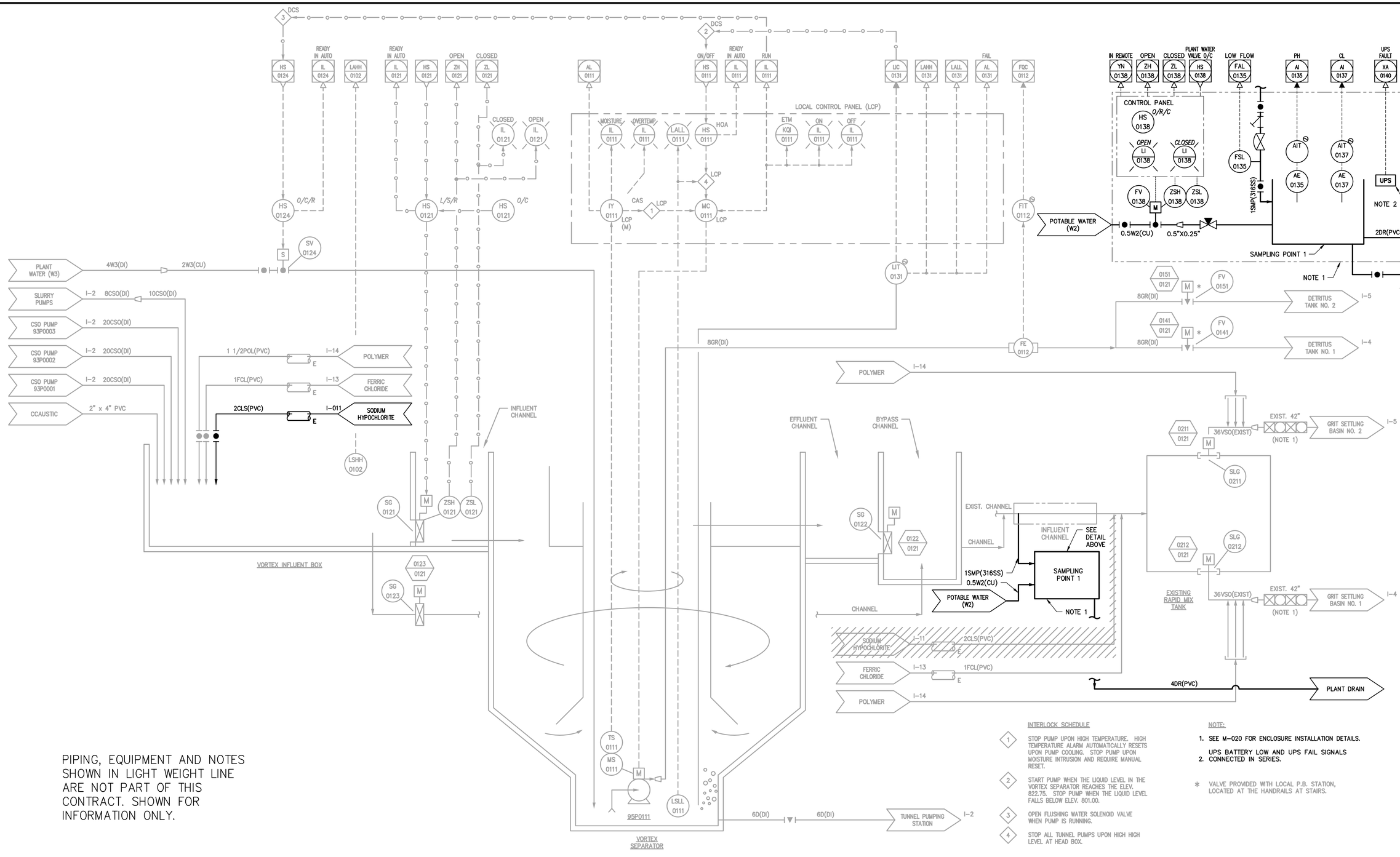

PIPING, EQUIPMENT AND NOTES SHOWN IN LIGHT WEIGHT LINE ARE NOT PART OF THIS CONTRACT. SHOWN FOR INFORMATION ONLY.

INTERLOCK SCHEDULE

1. STOP PUMP UPON HIGH TEMPERATURE. HIGH TEMPERATURE ALARM AUTOMATICALLY RESETS UPON PUMP COOLING. STOP PUMP UPON MOISTURE INTRUSION AND REQUIRE MANUAL RESET.
2. START PUMP WHEN THE LIQUID LEVEL IN THE VORTEX SEPARATOR REACHES THE ELEV. 822.75. STOP PUMP WHEN THE LIQUID LEVEL FALLS BELOW ELEV. 801.00.
3. OPEN FLUSHING WATER SOLENOID VALVE WHEN PUMP IS RUNNING.
4. STOP ALL TUNNEL PUMPS UPON HIGH HIGH LEVEL AT HEAD BOX.

NOTE:

1. SEE M-020 FOR ENCLOSURE INSTALLATION DETAILS.

   UPS BATTERY LOW AND UPS FAIL SIGNALS
2. CONNECTED IN SERIES.

* VALVE PROVIDED WITH LOCAL P.B. STATION, LOCATED AT THE HANDRAILS AT STAIRS.

COPYRIGHT: ARCADIS U.S., INC. 2016

IF THIS BAR IS NOT 1" INDICATED SCALE IS INCORRECT

NO.	DATE	ISSUED FOR	BY
0	JUL 2019	BIDDING	HG

SEALS

GEORGIA REGISTERED No. PE039674 PROFESSIONAL ENGINEER 01/31/19

ARCADIS A Joint Venture
BPA
2839 Paces Ferry Road
Suite 900
Atlanta, GA 30339
Tel: 770-431-8666
Fax: 770-435-2666
www.arcadis-us.com

RESURGENS 1878 ATLANTA, GA. 1961

ATLANTA, GEORGIA
CITY OF ATLANTA
DEPARTMENT OF WATERSHED MANAGEMENT

EAST AREA WATER QUALITY CONTROL FACILITY IMPROVEMENTS

W.01.02.0085

SHEET TITLE

VORTEX SEPARATOR P&ID

DATE: JULY 2019
PROJECT NO.: GABPA134
DESIGNED BY: F. ARANGO
DRAWN BY: C. MARTINI
CHECKED BY: E. KOWALSKI

SCALE: NONE

I-003

SHEET 129 OF 150

User:THOMAS Spec:AUS-NCSMOD File:I:\ACAD\PROJ\GABPA134 - CSO GROUP 1\BID PACKAGE 2\SHEETS\INSTRUMENTATION\I-003.DWG Scale:1:1/2 SavedDate:7/23/2019 Time:16:58 Plot Date: Thomas, Travis; 7/31/2019, 13:11 ; Layout:I29

PIPING, EQUIPMENT AND NOTES SHOWN IN LIGHT WEIGHT LINE ARE NOT PART OF THIS CONTRACT. SHOWN FOR INFORMATION ONLY.

INTERLOCK SCHEDULE

1. STOP PUMP UPON HIGH TEMPERATURE. HIGH TEMPERATURE ALARM AUTOMATICALLY RESETS UPON PUMP COOLING.
2. STOP PUMP UPON MOISTURE INTRUSION. REQUIRES MANUAL RESET.
3. STOP PUMP UPON OPERATION OF THE EMERGENCY STOP PUSHBUTTON.

NOTES:

1. SINGLE CONTROL PANEL FOR THE DETRITUS TANK RAKE MECHANISM AND CENTER DRIVE MECHANISM.
2. SEE SHEET I-15 FOR GRIT SETTLING TANK FLUSHING SYSTEM DETAILS.

COPYRIGHT: ARCADIS U.S., INC. 2016

IF THIS BAR IS NOT 1" INDICATED SCALE IS INCORRECT

NO.	DATE	ISSUED FOR	BY
0	JUL 2019	BIDDING	HG

SEALS

GEORGIA REGISTERED No. PE039674 PROFESSIONAL ENGINEER 07/31/19

ARCADIS BPA A Joint Venture
2839 Paces Ferry Road
Suite 900
Atlanta, GA 30339
Tel: 770-431-8666
Fax: 770-435-2666
www.arcadis-us.com

ATLANTA, GEORGIA
CITY OF ATLANTA
DEPARTMENT OF WATERSHED MANAGEMENT

EAST AREA WATER QUALITY CONTROL FACILITY IMPROVEMENTS

W.01.02.0085

SHEET TITLE

GRIT SETTLING AND SEDIMENTATION BASIN 1 P&ID

DATE:	JULY 2019
PROJECT NO.:	GABPA134
DESIGNED BY:	F. ARANGO
DRAWN BY:	C. MARTINI
CHECKED BY:	E. KOWALSKI

SCALE: NONE

I-004

SHEET 130 OF 150

User:THOMAS Spec:AUS-NCSMOD File:I:\ACAD\PROJ\GABPA134 - CSO GROUP 1\BID PACKAGE 2\SHEETS\INSTRUMENTATION\I-004.DWG Scale:1:1/2 SavedDate:5/31/2019 Time:14:22 Plot Date: Thomas, Travis; 7/31/2019; 13:17 ; Layout:I30

PIPING, EQUIPMENT AND NOTES SHOWN IN LIGHT WEIGHT LINE ARE NOT PART OF THIS CONTRACT. SHOWN FOR INFORMATION ONLY.

NOTES:

1. SINGLE CONTROL PANEL FOR THE DETRITUS TANK RAKE MECHANISM AND CENTER DRIVE MECHANISM.
2. SEE SHEET I–15 FOR GRIT SETTLING TANK FLUSHING SYSTEM DETAILS.

INTERLOCK SCHEDULE

1. STOP PUMP UPON HIGH TEMPERATURE. HIGH TEMPERATURE ALARM AUTOMATICALLY RESETS UPON PUMP COOLING.
2. STOP PUMP UPON MOISTURE INTRUSION. REQUIRES MANUAL RESET.
3. STOP PUMP UPON OPERATION OF THE EMERGENCY STOP PUSHBUTTON.

SEDIMENTATION BASIN 1 I–004

PLANT WATER (W3) 4W3(DI)

RAPID MIX TANK I–3 42VSO(DI)

LSH 0325 ONE PER PASS

FV 0261 M

96P0321 VACUUM PUMP ONE PER PASS

SODIUM HYPOCHLORITE I–11 2CLS(PVC)

GRIT SETTLING BASIN NO. 2

SEDIMENTATION BASIN NO. 2

FLOW THROUGH EXISTING PERFORATED BAFFLE WALL

EXIST. CHAIN AND FLIGHTS

BASIN FLUSHING SYSTEM

FV 3441 ZSH 3441 ZSL 3441

PLANT WATER W3

PLANT WATER W3

24GR(DI)

FLUIDIZING FLOWMETER PANEL (DETAIL SHOWN ON I–022)

4W3(DI)

6W3(DI)

LE 3411

LIT 3411

SI 3432 IN–REMOTE YN 3432 FAULT XA 3432 START/STOP MC 3432 SC 3432 RUN MN 3432

VFD PANEL

FAULT LI 3432 HS 3432 L/R

SI 3432 XS 3432 SC 3432 VFD HS 3432 A/M SPEED

ON LI 3432

PB 3432 S/S PB 3432 RESET

HIGH MOISTURE LI 3432 HIGH TEMP. LI 3432 E–STOP LI 3432

VFD 1 VFD 2 VFD 3 HS 3432 E–STOP

READY IN AUTO YN 3441 HS 3441 OPEN ZH 3441 CLOSED ZL 3441

CLOSED IL 3441 OPEN IL 3441

HS 3441 L/S/R HS 3441 O/C

MSH 3432 TSH 3432 MSH 3433 TSH 3433 MSH 3434 TSH 3434 MSH 3435 TSH 3435

4"X3" REDUCER (TYP.)

SLUDGE PUMP 96P3432 SLUDGE PUMP 96P3433 SLUDGE PUMP 96P3434 SLUDGE PUMP 96P3435

SEDIMENTATION BASIN NO. 2

4SL(316SS) 3433/3432 3434/3432 3435/3432

PI 3432 PI 3433 PI 3434 PI 3435

1.25W3(316SS) FI 3432 FI 3433 FI 3434 FI 3435

8SL(DI) 8SL(HDPE) SLUDGE HOLDING TANK I–017

4SL(DI) 4SL(DI) 4SL(DI)

FE 3472 FE 3471

6SL(DI)

FI 3471 FI 3472

READY IN AUTO ZSI 31083 HS 31083 OPEN ZSI 31083 CLOSED ZSI 31083

CLOSED IL 31083 OPEN IL 31083

FIT 3471 FIT 3472 HS 31083 L/S/R HS 31083 O/C

42SBE(DI) 18DR(DI)

ZSH 31083 ZSL 31083 FV 31083

42SBE(DI) 42REC(DI) 24REC(DI) RECIRCULATION TO CSO TUNNEL I–2

SED BASIN NO. 2 EFFLUENT I–5 42SBE(DI) 42SBE(DI) HIGH RATE FILTERS I–7

GRIT PUMP STATION 2 I–6

6SL(DI) SLUDGE PUMPS I–6

6SL(DI) SLUDGE PUMPS I–6

COPYRIGHT: ARCADIS U.S., INC. 2016

IF THIS BAR IS NOT 1" INDICATED SCALE IS INCORRECT

NO.	DATE	ISSUED FOR	BY
0	JUL 2019	BIDDING	HG

SEALS

GEORGIA REGISTERED No. PE039674 PROFESSIONAL ENGINEER 07/31/19

ARCADIS A Joint Venture BPA
2839 Paces Ferry Road
Suite 900
Atlanta, GA 30339
Tel: 770–431–8666
Fax: 770–435–2666
www.arcadis–us.com

ATLANTA, GEORGIA
CITY OF ATLANTA
DEPARTMENT OF WATERSHED MANAGEMENT

EAST AREA WATER QUALITY CONTROL FACILITY IMPROVEMENTS

W.01.02.0085

SHEET TITLE

GRIT SETTLING AND SEDIMENTATION BASIN 2 P&ID

DATE:	JULY 2019
PROJECT NO.:	GABPA134
DESIGNED BY:	F. ARANGO
DRAWN BY:	C. MARTINI
CHECKED BY:	E. KOWALSKI

SCALE: NONE

I–005

SHEET 131 OF 150

User:THOMAS Spec:AUS-NCSMOD File:I:\ACAD\PROJ\GABPA134 - CSO GROUP 1\BID PACKAGE 2\SHEETS\INSTRUMENTATION\I-005.DWG Scale:1:1/2 SavedDate:6/18/2019 Time:11:33 Plot Date: Thomas, Travis: 7/31/2019; 13:25 ; Layout:I31

User: TTHOMAS Spec: AUS-NCSMOD File: I:\ACAD\PROJ\GABPA134 - CSO GROUP 1\BID PACKAGE 2\SHEETS\INSTRUMENTATION\I-006D.DWG Scale:1:1/2 SavedDate:5/31/2019 Time:14:24 Plot Date: Thomas, Travis; 7/31/2019; 13:39 ; Layout:132

PIPING, EQUIPMENT AND NOTES SHOWN IN LIGHT WEIGHT LINE ARE NOT PART OF THIS CONTRACT. SHOWN FOR INFORMATION ONLY.

TUNNEL PUMPING STATION I-2 18CSO(DI)

WRC HEADWORKS

CSO SLUDGE HOLDING TANK

8WWW(DI) 12WWW(DI) WRC HEADWORKS

WASTE WASHWATER PUMPING STATION

SEAL WATER ARRANGEMENT (TYPICAL FOR SIX SLUDGE PUMPS)

PLANT WATER (W3)

96P3321 96P3322 96P3323 96P3324 96P3325 96P3326

SED. BASIN NO. 2 SUMP FAR I-4 6SL(DI)

SED. BASIN NO. 2 SUMP NEAR I-4 6SL(DI)

SED. BASIN NO. 1 SUMP FAR I-5 6SL(DI)

SED. BASIN NO. 1 SUMP NEAR I-5 6SL(DI)

INTERLOCK SCHEDULE

1. OPEN SEAL WATER SOLENOID VALVE UPON INITIATING PUMP RUN COMMAND. START PUMP AFTER HARDWIRED TIME DELAY.
2. SHUT DOWN PUMP UPON LOW SEAL WATER FLOW OR MOTOR OVERLOAD.

NO.	DATE	ISSUED FOR	BY
0	JUL 2019	BIDDING	HG

COPYRIGHT: ARCADIS U.S., INC. 2016

IF THIS BAR IS NOT 1" INDICATED SCALE IS INCORRECT

SEALS

GEORGIA REGISTERED No. PE039674 PROFESSIONAL ENGINEER 07/31/19

ARCADIS A Joint Venture BPA
2839 Paces Ferry Road
Suite 900
Atlanta, GA 30339
Tel: 770-431-8666
Fax: 770-435-2666
www.arcadis-us.com

ATLANTA, GEORGIA
CITY OF ATLANTA
DEPARTMENT OF WATERSHED MANAGEMENT

EAST AREA WATER QUALITY CONTROL FACILITY IMPROVEMENTS

W.01.02.0085

SHEET TITLE

SLUDGE PUMPING PROPOSED P&ID

DATE:	JULY 2019
PROJECT NO.:	GABPA134
DESIGNED BY:	F. ARANGO
DRAWN BY:	C. MARTINI
CHECKED BY:	E. KOWALSKI

SCALE: NONE

I-006D

SHEET 132 OF 150

PIPING, EQUIPMENT AND NOTES SHOWN IN LIGHT WEIGHT LINE ARE NOT PART OF THIS CONTRACT. SHOWN FOR INFORMATION ONLY.

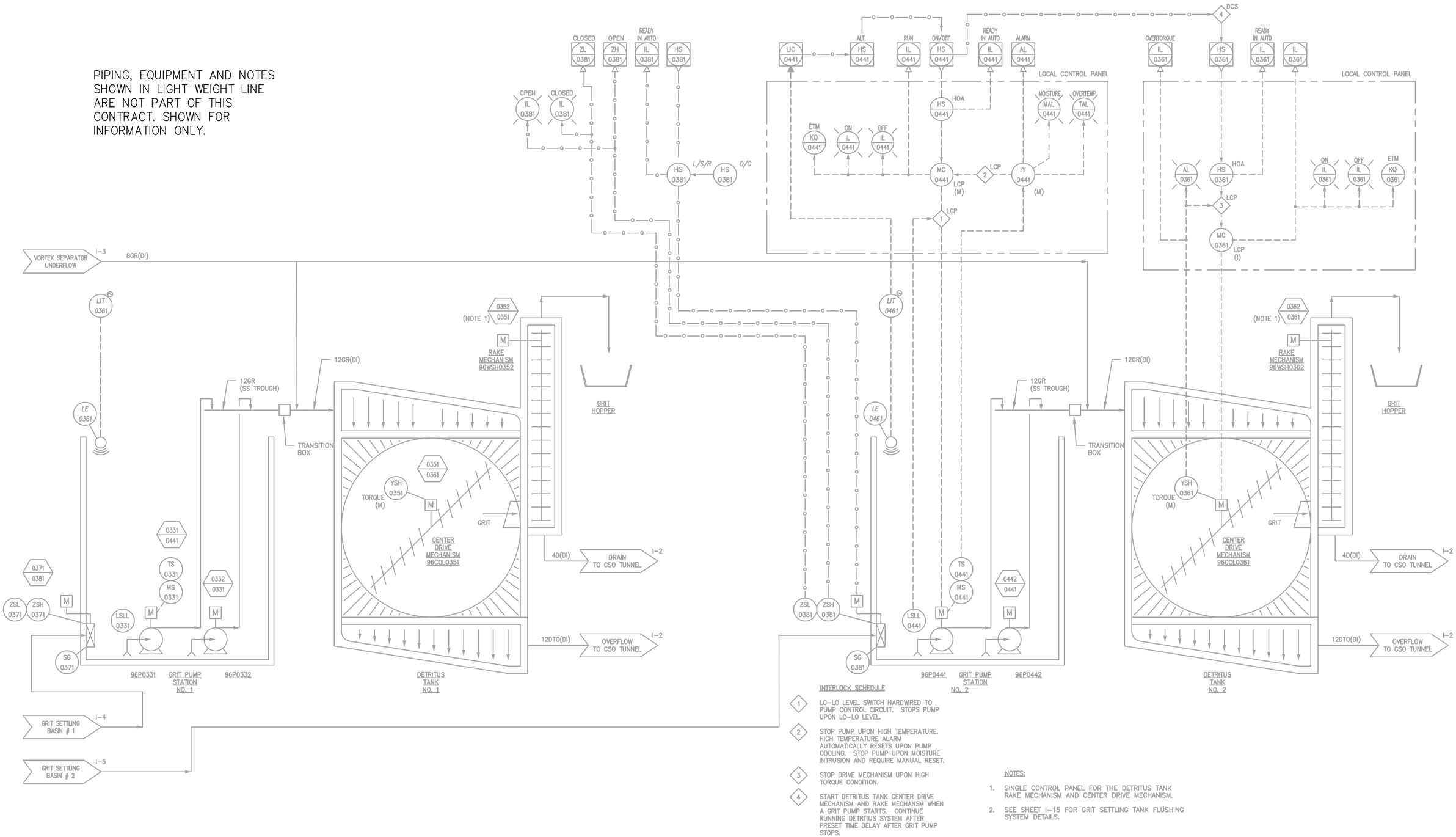

INTERLOCK SCHEDULE

1. LO-LO LEVEL SWITCH HARDWIRED TO PUMP CONTROL CIRCUIT. STOPS PUMP UPON LO-LO LEVEL.
2. STOP PUMP UPON HIGH TEMPERATURE. HIGH TEMPERATURE ALARM AUTOMATICALLY RESETS UPON PUMP COOLING. STOP PUMP UPON MOISTURE INTRUSION AND REQUIRE MANUAL RESET.
3. STOP DRIVE MECHANISM UPON HIGH TORQUE CONDITION.
4. START DETRITUS TANK CENTER DRIVE MECHANISM AND RAKE MECHANSM WHEN A GRIT PUMP STARTS. CONTINUE RUNNING DETRITUS SYSTEM AFTER PRESET TIME DELAY AFTER GRIT PUMP STOPS.

NOTES:

1. SINGLE CONTROL PANEL FOR THE DETRITUS TANK RAKE MECHANISM AND CENTER DRIVE MECHANISM.
2. SEE SHEET I-15 FOR GRIT SETTLING TANK FLUSHING SYSTEM DETAILS.

COPYRIGHT: ARCADIS U.S., INC. 2016

IF THIS BAR IS NOT 1" INDICATED SCALE IS INCORRECT

NO.	DATE	ISSUED FOR	BY
0	JUL 2019	BIDDING	HG

SEALS

GEORGIA REGISTERED No. PE039674 PROFESSIONAL ENGINEER 07/31/19

ARCADIS BPA A Joint Venture
2839 Paces Ferry Road
Suite 900
Atlanta, GA 30339
Tel: 770-431-8666
Fax: 770-435-2666
www.arcadis-us.com

ATLANTA, GEORGIA
CITY OF ATLANTA
DEPARTMENT OF WATERSHED MANAGEMENT

EAST AREA WATER QUALITY CONTROL FACILITY IMPROVEMENTS

W.01.02.0085

SHEET TITLE

GRIT PUMP STATION AND DETRITUS TANK P&ID

DATE:	JULY 2019
PROJECT NO.:	GABPA134
DESIGNED BY:	F. ARANGO
DRAWN BY:	C. MARTINI
CHECKED BY:	E. KOWALSKI

SCALE: NONE

I-006

SHEET 133 OF 150

User:TTHOMAS Spec:AUS-NCSMOD File:I:\ACAD\PROJ\GABPA134 - CSO GROUP 1\BID PACKAGE 2\SHEETS\INSTRUMENTATION\I-006.DWG Scale:1:1/2 SavedDate:5/31/2019 Time:14:17 Plot Date: Thomas, Travis; 7/31/2019; 13:31 ; Layout:133

User: TTHOMAS Spec: AUS-NCSM0D File: I: \ACAD\PROJ\GABPA134 - CSO GROUP 1\BID PACKAGE 2\SHEETS\INSTRUMENTATION\I-007.DWG Scale:1:1/2 SavedDate:5/31/2019 Time:14:24 Plot Date: Thomas, Travis; 7/31/2019; 13:49 ; Layout:134

READY IN AUTO IL 0912 | HS 0912 | OPEN ZSI 0912 | CLOSED ZSI 0912

OPEN IL 0912 | CLOSED IL 0912

HS 0912 L/S/R

HS 0912 O/C

FV 0912 | ZSH 0912 | ZSL 0912

SODIUM HYPOCHLORITE I-11

SEDIMENTATION BASIN EFFLUENT I-4 — 42SBE(DI)

PLANT WATER (W3) — 6W3(DIP) — 0914 0912

FV 31052 — EXISTING

COMBINATION AIR RELEASE/VACUUM RELIEF VALVE — 18WWW(DI) — FV 0106

AIR RELEASE VALVE — 18WWW(DI) — FV 0306

AIR RELEASE VALVE — 18WWW(DI) — FV 0506

AIR RELEASE VALVE — 18WWW(DI) — FV 0706

AIR RELEASE VALVE — 18WWW(DI) — FV 0906

AIR RELEASE VALVE — 18WWW(DI) — FV 1106

AIR RELEASE VALVE — 18WWW(DI)

24WWW(DI) — WASTE WASHWATER PUMP STATION — I-9

12WWW(DI) — 36FEFF(DI)

OC 0103 | OC 0303 | OC 0503 | OC 0703 | OC 0903 | OC 1103

FV 0104 BBA(SS) FV 0105 — FV 0304 BBA(SS) FV 0305 — FV 0504 BBA(SS) FV 0505 — FV 0704 BBA(SS) FV 0705 — FV 0904 BBA(SS) FV 0905 — FV 1104 BBA(SS) FV 1105

12BA(SS) — WASHWATER AIR FROM BLOWERS

SLG 0301 | SLG 1301 | SLG 1302

SLG 0101 SLG 0102 LIT 0107 — SLG 0301 SLG 0302 LIT 0307 — SLG 0501 SLG 0502 LIT 0507 — SLG 0701 SLG 0702 LIT 0707 — SLG 0901 SLG 0902 LIT 0907 — SLG 1101 SLG 1102 LIT 1107

SLG 0201 SLG 0202 LIT 0207 — SLG 0401 SLG 0402 LIT 0407 — SLG 0601 SLG 0602 LIT 0607 — SLG 0801 SLG 0802 LIT 0807 — SLG 1001 SLG 1002 LIT 1007 — SLG 1201 SLG 1202 LIT 1207

300F(DI)

SLG 1401 | SLG 1402

FV 0204 BBA(SS) FV 0205 — FV 0404 BBA(SS) FV 0405 — FV 0604 BBA(SS) FV 0605 — FV 0804 BBA(SS) FV 0805 — FV 1004 BBA(SS) FV 1005 — FV 1204 BBA(SS) FV 1205

OC 0203 | OC 0403 | OC 0603 | OC 0803 | OC 1003 | OC 1203

18WWW(DI) — 36FEFF(DI)

NOTES:

1. ALL MOTOR OPERATED VALVES ARE TYPICAL TO LOOP 0912.

30FEFF(DI)

FV 0206 — COMBINATION AIR RELEASE/VACUUM RELIEF VALVE — 18WWW(DI)

FV 0406 — AIR RELEASE VALVE — 18WWW(DI)

FV 0606 — AIR RELEASE VALVE — 18WWW(DI)

FV 0806 — AIR RELEASE VALVE — 18WWW(DI)

FV 1006 — AIR RELEASE VALVE — 18WWW(DI)

FV 1206 — AIR RELEASE VALVE — 18WWW(DI)

42FEFF(DI) — SODIUM BISULFITE INJECTION VAULT — I-8

42SBE(DI) — WRC TRICKLING FILTERS

PIPING, EQUIPMENT AND NOTES SHOWN IN LIGHT WEIGHT LINE ARE NOT PART OF THIS CONTRACT. SHOWN FOR INFORMATION ONLY.

COPYRIGHT: ARCADIS U.S., INC. 2016

IF THIS BAR IS NOT 1" INDICATED SCALE IS INCORRECT

NO.	DATE	ISSUED FOR	BY
0	JUL 2019	BIDDING	HG

SEALS

GEORGIA REGISTERED No. PE039674 PROFESSIONAL ENGINEER 07/31/19

ARCADIS BPA A Joint Venture
2839 Paces Ferry Road
Suite 900
Atlanta, GA 30339
Tel: 770-431-8666
Fax: 770-435-2666
www.arcadis-us.com

ATLANTA, GEORGIA
CITY OF ATLANTA
DEPARTMENT OF WATERSHED MANAGEMENT

EAST AREA WATER QUALITY CONTROL FACILITY IMPROVEMENTS

W.01.02.0085

SHEET TITLE

FILTER SYSTEM P&ID

DATE:	JULY 2019
PROJECT NO.:	GABPA134
DESIGNED BY:	F. ARANGO
DRAWN BY:	C. MARTINI
CHECKED BY:	E. KOWALSKI

SCALE: NONE

I-007

SHEET 134 OF 150

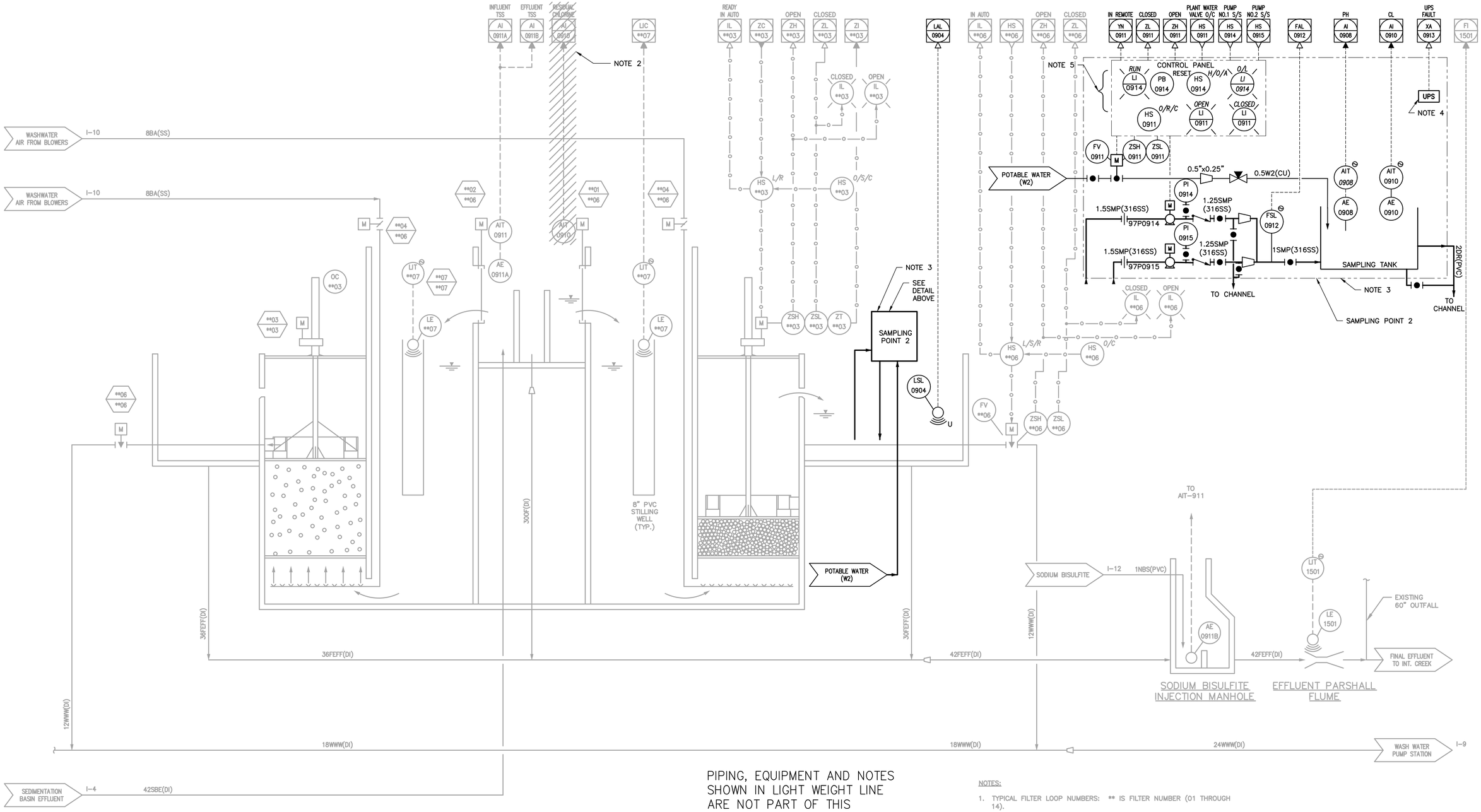

PIPING, EQUIPMENT AND NOTES SHOWN IN LIGHT WEIGHT LINE ARE NOT PART OF THIS CONTRACT. SHOWN FOR INFORMATION ONLY.

NOTES:

1. TYPICAL FILTER LOOP NUMBERS: ** IS FILTER NUMBER (01 THROUGH 14).
2. REMOVE EXISTING CHLORINE ANALYZER UNIT.
3. SEE M-002 FOR INSTALLATION DETAILS.
4. UPS BATTERY LOW AND UPS FAIL SIGNALS CONNECTED IN SERIES.
5. TYPICAL CONTROLS FOR BOTH PUMPS. SEE PANEL DETAIL ON I-022.

COPYRIGHT: ARCADIS U.S., INC. 2016

IF THIS BAR IS NOT 1" INDICATED SCALE IS INCORRECT

NO.	DATE	ISSUED FOR	BY
0	JUL 2019	BIDDING	HG

SEALS

GEORGIA REGISTERED No. PE039674 PROFESSIONAL ENGINEER
07/31/19

ARCADIS BPA
A Joint Venture
2839 Paces Ferry Road
Suite 900
Atlanta, GA 30339
Tel: 770-431-8666
Fax: 770-435-2666
www.arcadis-us.com

RESURGENS 1847 ATLANTA, GA. 1865

ATLANTA, GEORGIA
CITY OF ATLANTA
DEPARTMENT OF WATERSHED MANAGEMENT

EAST AREA WATER QUALITY CONTROL FACILITY IMPROVEMENTS

W.01.02.0085

SHEET TITLE

TYPICAL FILTER P&ID

DATE:	JULY 2019
PROJECT NO.:	GABPA134
DESIGNED BY:	F. ARANGO
DRAWN BY:	C. MARTINI
CHECKED BY:	E. KOWALSKI

SCALE: NONE

I-008

SHEET 135 OF 150

User: TTHOMAS Spec: AUS-NCSMOD File:I:\ACAD\PROJ\GABPA134 - CSO GROUP 1\BID PACKAGE 2\SHEETS\INSTRUMENTATION\I-008.DWG Scale: 1:1/2 SavedDate: 7/29/2019 Time: 09:26 Plot Date: Thomas, Travis; 7/31/2019; 13:59 ; Layout: 135

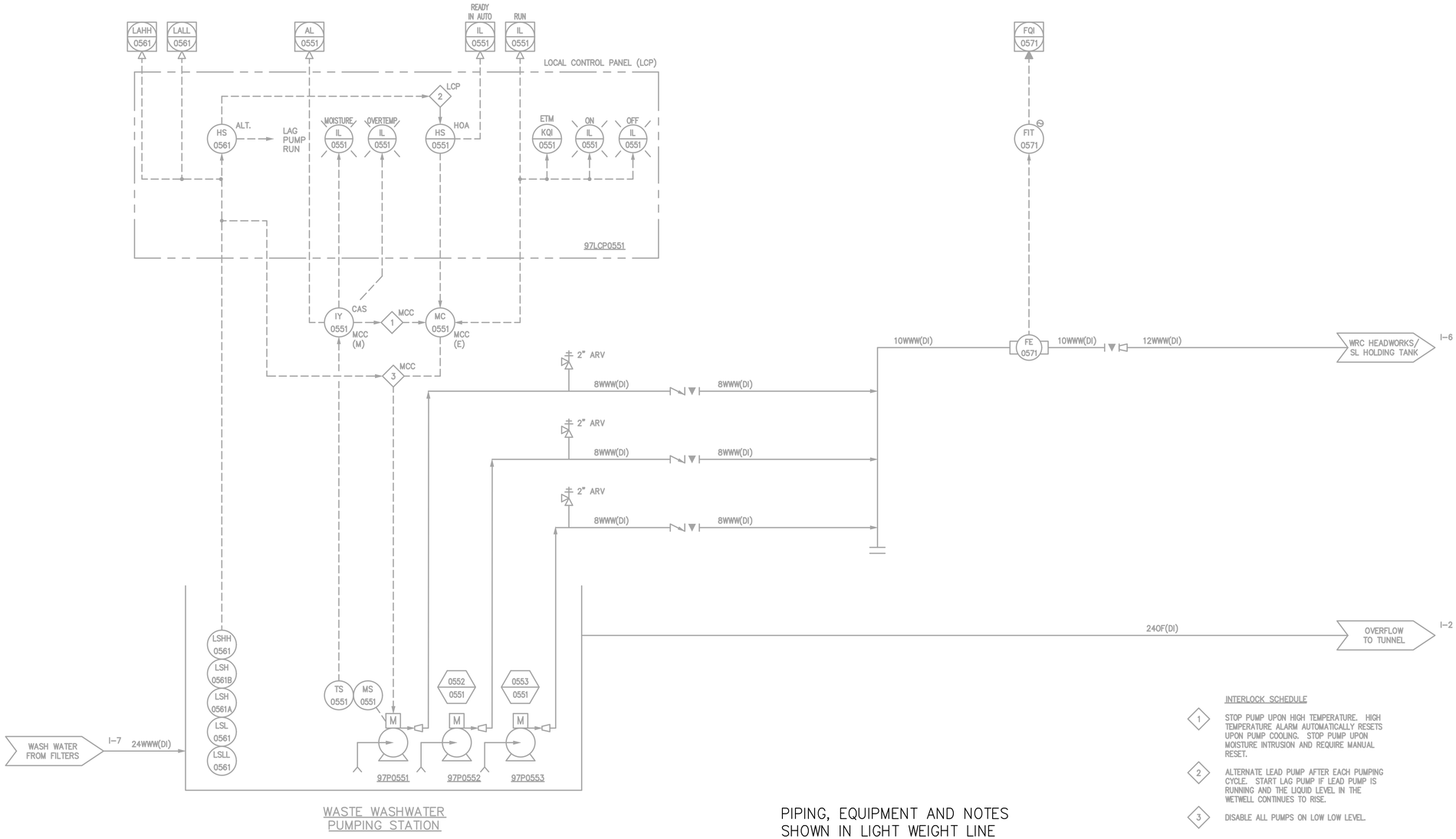

WASTE WASHWATER PUMPING STATION

INTERLOCK SCHEDULE

1. STOP PUMP UPON HIGH TEMPERATURE. HIGH TEMPERATURE ALARM AUTOMATICALLY RESETS UPON PUMP COOLING. STOP PUMP UPON MOISTURE INTRUSION AND REQUIRE MANUAL RESET.
2. ALTERNATE LEAD PUMP AFTER EACH PUMPING CYCLE. START LAG PUMP IF LEAD PUMP IS RUNNING AND THE LIQUID LEVEL IN THE WETWELL CONTINUES TO RISE.
3. DISABLE ALL PUMPS ON LOW LOW LEVEL.

PIPING, EQUIPMENT AND NOTES SHOWN IN LIGHT WEIGHT LINE ARE NOT PART OF THIS CONTRACT. SHOWN FOR INFORMATION ONLY.

COPYRIGHT: ARCADIS U.S., INC. 2016

IF THIS BAR IS NOT 1" INDICATED SCALE IS INCORRECT

NO.	DATE	ISSUED FOR	BY
0	JUL 2019	BIDDING	HG

SEALS

GEORGIA REGISTERED No. PE039674 PROFESSIONAL ENGINEER 07/31/19

ARCADIS A Joint Venture
BPA
2839 Paces Ferry Road
Suite 900
Atlanta, GA 30339
Tel: 770-431-8666
Fax: 770-435-2666
www.arcadis-us.com

ATLANTA, GEORGIA
CITY OF ATLANTA
DEPARTMENT OF WATERSHED MANAGEMENT

EAST AREA WATER QUALITY CONTROL FACILITY IMPROVEMENTS

W.01.02.0085

SHEET TITLE

WASTE WASHWATER PUMPING STATION P&ID

DATE: JULY 2019
PROJECT NO.: GABPA134
DESIGNED BY: F. ARANGO
DRAWN BY: C. MARTINI
CHECKED BY: E. KOWALSKI

SCALE: NONE

I-009

SHEET 136 OF 150

User: TTHOMAS Spec: AUS-NCSMOD File: I:\ACAD\PROJ\GABPA134 - CSO GROUP 1\BID PACKAGE 2\SHEETS\INSTRUMENTATION\I-009.DWG Scale: 1:1/2 SavedDate: 5/31/2019 Time: 14:25 Plot Date: Thomas, Travis; 7/31/2019; 14:02 ; Layout: I36

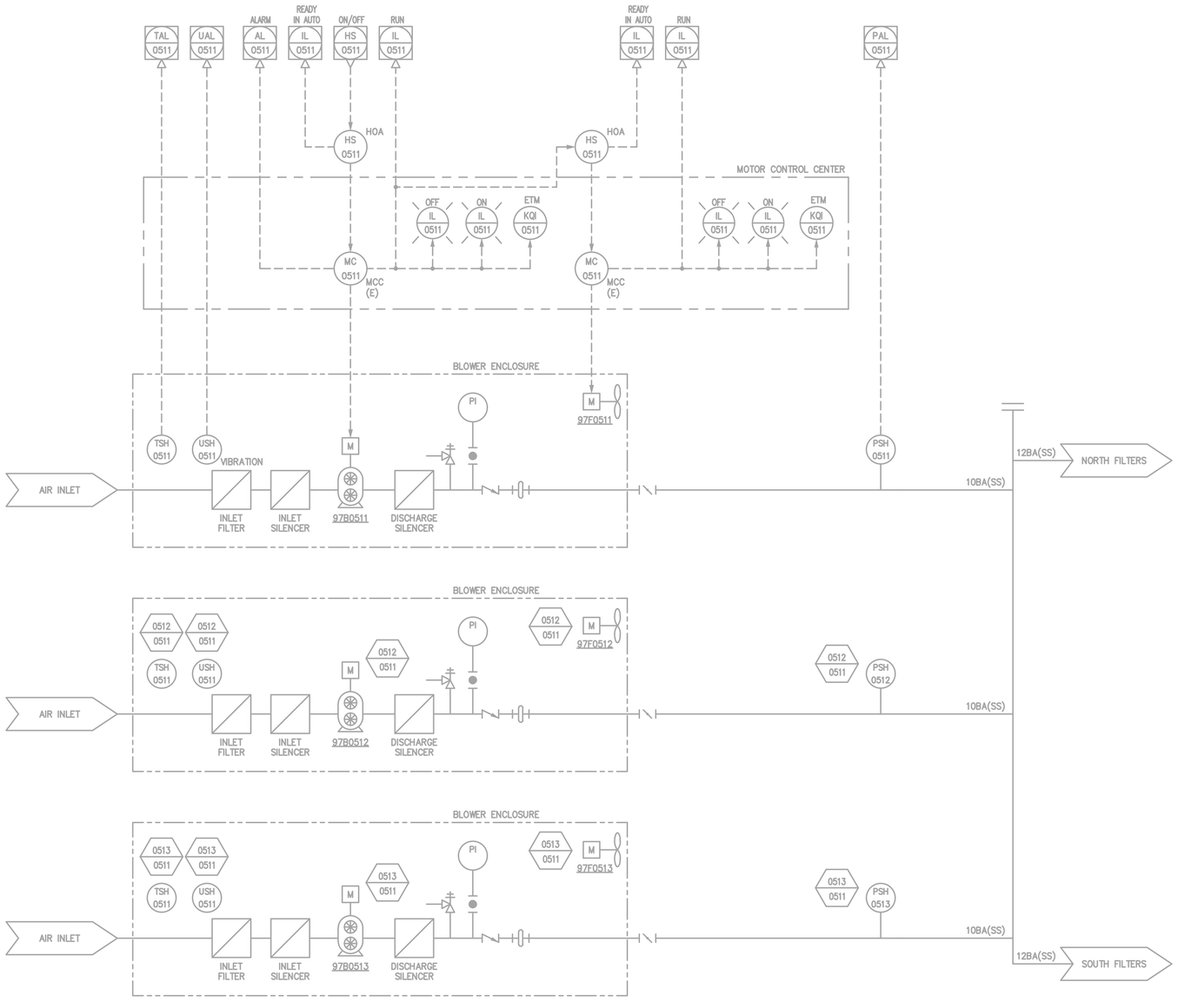

PIPING, EQUIPMENT AND NOTES SHOWN IN LIGHT WEIGHT LINE ARE NOT PART OF THIS CONTRACT. SHOWN FOR INFORMATION ONLY.

User: THOMAS Spec: AUS-NCSM0D File: I:\ACAD\PROJ\GABPA134 - CSO GROUP 1\BID PACKAGE 2\SHEETS\INSTRUMENTATION\I-010.DWG Scale:1:1/2 SavedDate:5/31/2019 Time:14:26 Plot Date: Thomas, Travis; 7/31/2019; 14:05 ; Layout:137

COPYRIGHT:
ARCADIS U.S., INC.
2016

IF THIS BAR IS NOT 1" INDICATED SCALE IS INCORRECT

NO.	DATE	ISSUED FOR	BY
0	JUL 2019	BIDDING	HG

SEALS

GEORGIA REGISTERED No. PE039674 PROFESSIONAL ENGINEER 07/31/19

ARCADIS
BPA
A Joint Venture
2839 Paces Ferry Road
Suite 900
Atlanta, GA 30339
Tel: 770-431-8666
Fax: 770-435-2666
www.arcadis-us.com

ATLANTA, GEORGIA
CITY OF ATLANTA
DEPARTMENT OF WATERSHED MANAGEMENT

EAST AREA WATER QUALITY CONTROL FACILITY IMPROVEMENTS

W.01.02.0085

SHEET TITLE

WASTE WASHWATER BLOWERS
P&ID

DATE: JULY 2019
PROJECT NO.: GABPA134
DESIGNED BY: F. ARANGO
DRAWN BY: C. MARTINI
CHECKED BY: E. KOWALSKI

SCALE: NONE

I-010

SHEET 137 OF 150

PIPING, EQUIPMENT AND NOTES SHOWN IN LIGHT WEIGHT LINE ARE NOT PART OF THIS CONTRACT. SHOWN FOR INFORMATION ONLY.

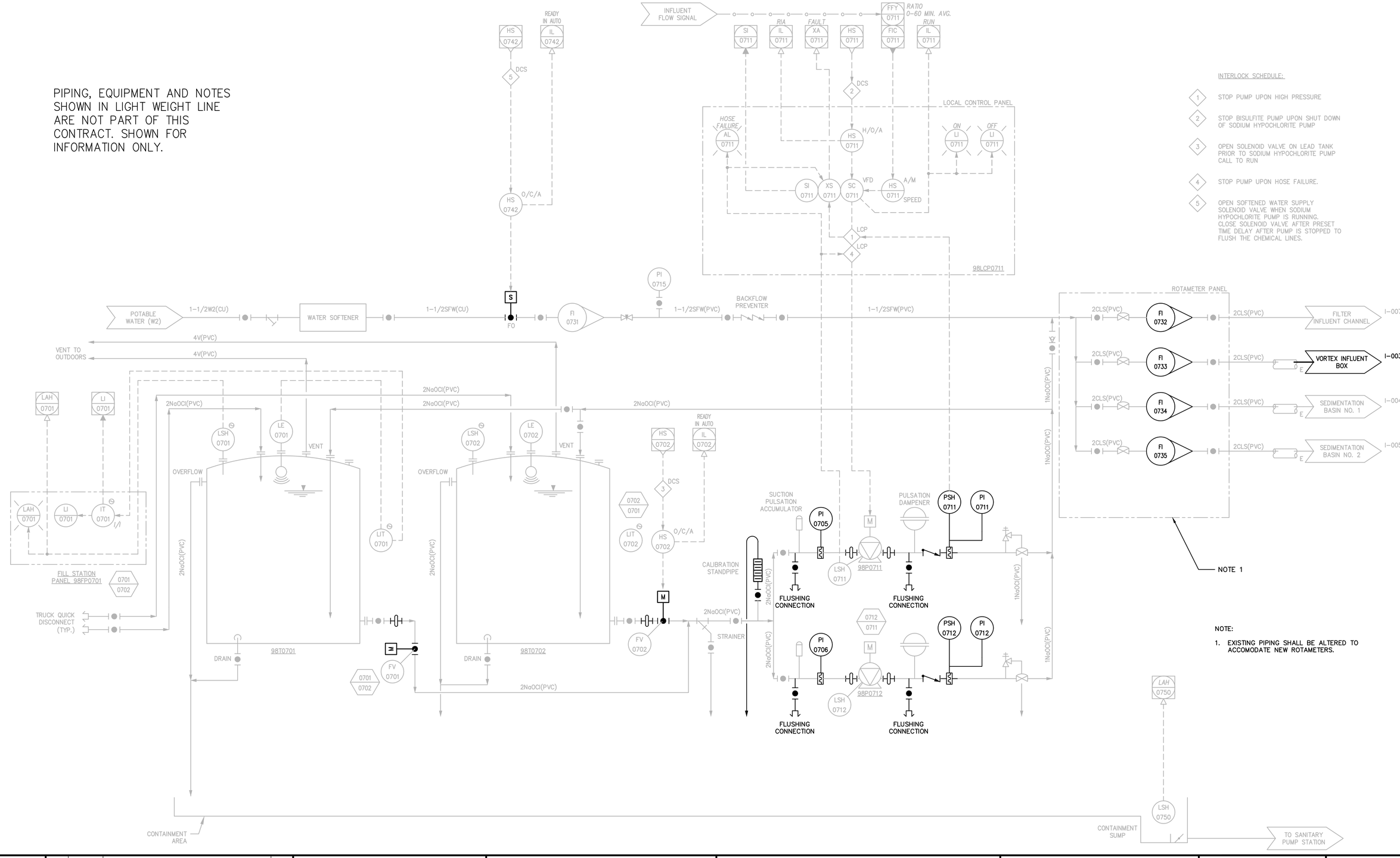

INTERLOCK SCHEDULE:

1. STOP PUMP UPON HIGH PRESSURE
2. STOP BISULFITE PUMP UPON SHUT DOWN OF SODIUM HYPOCHLORITE PUMP
3. OPEN SOLENOID VALVE ON LEAD TANK PRIOR TO SODIUM HYPOCHLORITE PUMP CALL TO RUN
4. STOP PUMP UPON HOSE FAILURE.
5. OPEN SOFTENED WATER SUPPLY SOLENOID VALVE WHEN SODIUM HYPOCHLORITE PUMP IS RUNNING. CLOSE SOLENOID VALVE AFTER PRESET TIME DELAY AFTER PUMP IS STOPPED TO FLUSH THE CHEMICAL LINES.

NOTE:

1. EXISTING PIPING SHALL BE ALTERED TO ACCOMODATE NEW ROTAMETERS.

COPYRIGHT: ARCADIS U.S., INC. 2016

IF THIS BAR IS NOT 1" INDICATED SCALE IS INCORRECT

NO.	DATE	ISSUED FOR	BY
0	JUL 2019	BIDDING	HG

SEALS

GEORGIA REGISTERED No. PE039674 PROFESSIONAL ENGINEER 01/21/19

ARCADIS A Joint Venture
BPA
2839 Paces Ferry Road
Suite 900
Atlanta, GA 30339
Tel: 770-431-8666
Fax: 770-435-2666
www.arcadis-us.com

ATLANTA, GEORGIA
CITY OF ATLANTA
DEPARTMENT OF WATERSHED MANAGEMENT

EAST AREA WATER QUALITY CONTROL FACILITY IMPROVEMENTS

W.01.02.0085

SHEET TITLE

EA WQCF SODIUM HYPOCHLORITE SYSTEM P&ID

DATE:	JULY 2019
PROJECT NO.:	GABPA134
DESIGNED BY:	H. GIACOMIN
DRAWN BY:	C. MARTINI
CHECKED BY:	E. KOWALSKI

SCALE: NONE

I-011

SHEET 138 OF 150

User: TTHOMAS Spec: AUS-NCSMOD File: I:\ACAD\PROJ\GABPA134 - CSO GROUP 1\BID PACKAGE 2\SHEETS\INSTRUMENTATION\I-011.DWG Scale:1:1/2 SavedDate:5/31/2019 Time:14:26 Plot Date: Thomas, Travis; 7/31/2019; 14:08 ; Layout:138

PIPING, EQUIPMENT AND NOTES SHOWN IN LIGHT WEIGHT LINE ARE NOT PART OF THIS CONTRACT. SHOWN FOR INFORMATION ONLY.

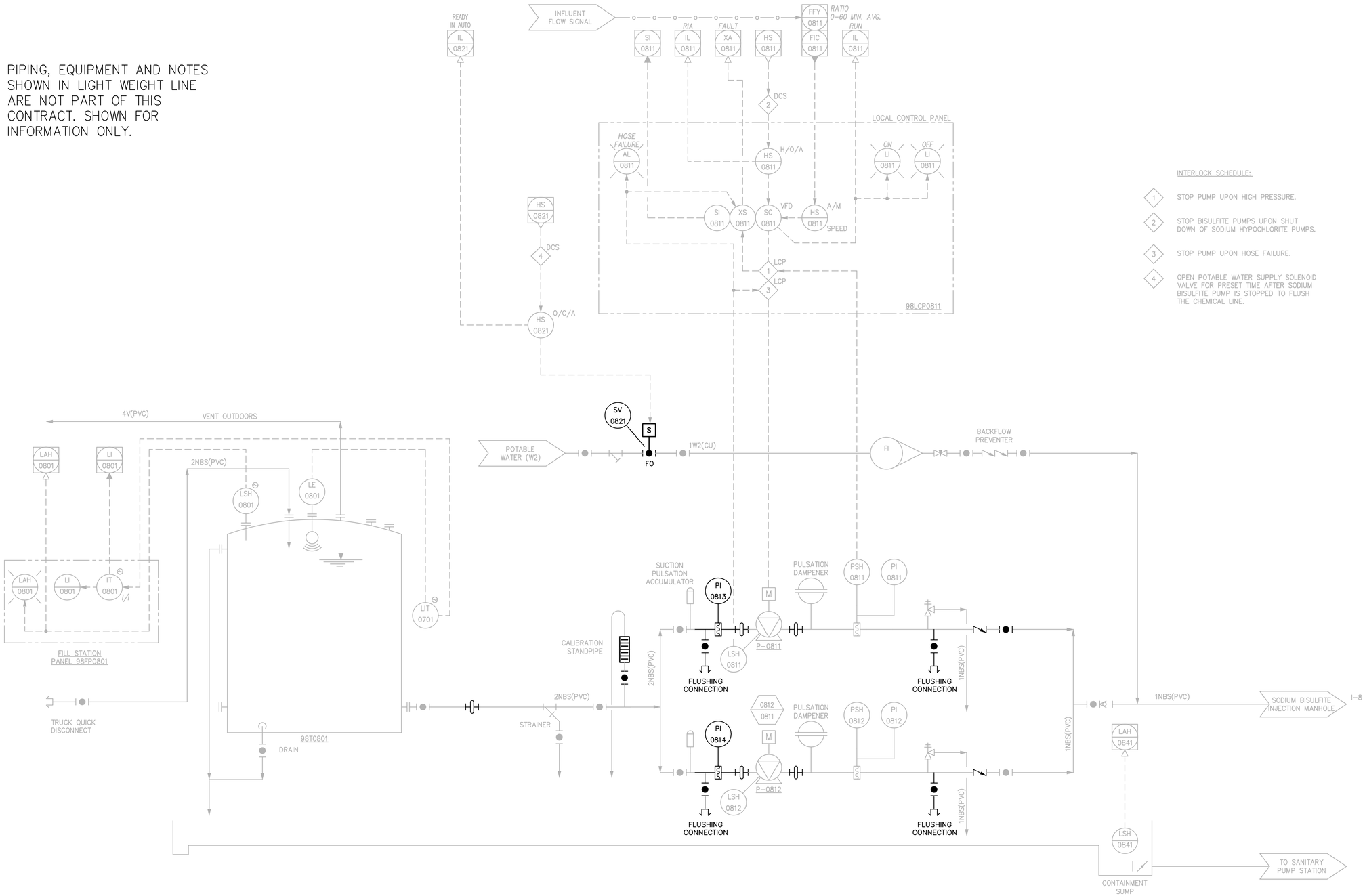

INTERLOCK SCHEDULE:

1. STOP PUMP UPON HIGH PRESSURE.
2. STOP BISULFITE PUMPS UPON SHUT DOWN OF SODIUM HYPOCHLORITE PUMPS.
3. STOP PUMP UPON HOSE FAILURE.
4. OPEN POTABLE WATER SUPPLY SOLENOID VALVE FOR PRESET TIME AFTER SODIUM BISULFITE PUMP IS STOPPED TO FLUSH THE CHEMICAL LINE.

COPYRIGHT: ARCADIS U.S., INC. 2016

IF THIS BAR IS NOT 1" INDICATED SCALE IS INCORRECT

NO.	DATE	ISSUED FOR	BY
0	JUL 2019	BIDDING	HG

SEALS

GEORGIA REGISTERED No. PE039674 PROFESSIONAL ENGINEER 07/31/19

ARCADIS A Joint Venture
BPA
2839 Paces Ferry Road
Suite 900
Atlanta, GA 30339
Tel: 770-431-8666
Fax: 770-435-2666
www.arcadis-us.com

ATLANTA, GEORGIA
CITY OF ATLANTA
DEPARTMENT OF WATERSHED MANAGEMENT

EAST AREA WATER QUALITY CONTROL FACILITY IMPROVEMENTS

W.01.02.0085

SHEET TITLE

EA WQCF SODIUM BISULFITE SYSTEM P&ID

DATE:	JULY 2019
PROJECT NO.:	GABPA134
DESIGNED BY:	H. GIACOMIN
DRAWN BY:	C. MARTINI
CHECKED BY:	E. KOWALSKI

SCALE: NONE

I-012

SHEET 139 OF 150

User:HDGILES Spec:AUS-NCSMOD File:I:\ACAD\PROJ\GABPA134 - CSO GROUP 1\BID PACKAGE 2\SHEETS\INSTRUMENTATION\I-012.DWG Scale:1:1/2 SavedDate:6/3/2019 Time:09:36 Plot Date: Giles, Hamilton; 7/31/2019, 17:43 ; Layout:139

PIPING, EQUIPMENT AND NOTES SHOWN IN LIGHT WEIGHT LINE ARE NOT PART OF THIS CONTRACT. SHOWN FOR INFORMATION ONLY.

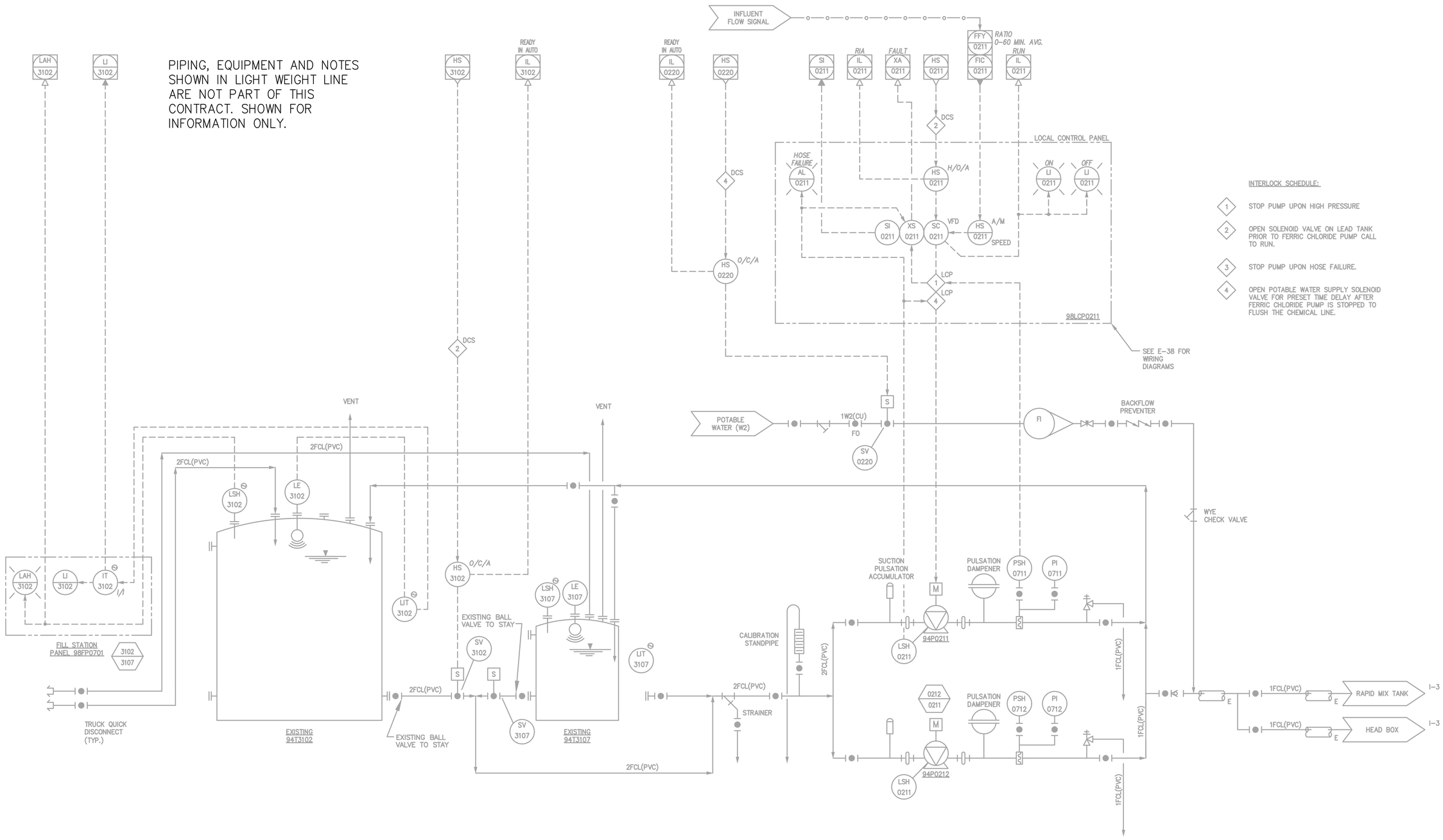

User: TTHOMAS Spec: AUS-NCSM0D File: I:\ACAD\PROJ\GABPA134 - CSO GROUP 1\BID PACKAGE 2\SHEETS\INSTRUMENTATION\I-013.DWG Scale:1:1/2 SavedDate:5/31/2019 Time:14:27 Plot Date: Thomas, Travis; 7/31/2019; 14:12 ; Layout:140

COPYRIGHT: ARCADIS U.S., INC. 2016

IF THIS BAR IS NOT 1" INDICATED SCALE IS INCORRECT

NO.	DATE	ISSUED FOR	BY
0	JUL 2019	BIDDING	HG

SEALS

GEORGIA REGISTERED No. PE039674 PROFESSIONAL ENGINEER 07/31/19

ARCADIS A Joint Venture
BPA
2839 Paces Ferry Road
Suite 900
Atlanta, GA 30339
Tel: 770-431-8666
Fax: 770-435-2666
www.arcadis-us.com

ATLANTA, GEORGIA
CITY OF ATLANTA
DEPARTMENT OF WATERSHED MANAGEMENT

EAST AREA WATER QUALITY CONTROL FACILITY IMPROVEMENTS

W.01.02.0085

SHEET TITLE

FERRIC CHLORIDE SYSTEM P&ID

DATE:	JULY 2019
PROJECT NO.:	GABPA134
DESIGNED BY:	F. ARANGO
DRAWN BY:	C. MARTINI
CHECKED BY:	E. KOWALSKI

SCALE: NONE

I-013

SHEET 140 OF 150

PIPING, EQUIPMENT AND NOTES SHOWN IN LIGHT WEIGHT LINE ARE NOT PART OF THIS CONTRACT. SHOWN FOR INFORMATION ONLY.

INTERLOCK SCHEDULE:

1. STOP PUMP UPON HIGH PRESSURE
2. STOP PUMP UPON HOSE FAILURE.
3. STOP BATCH IF EITHER OVERFLOW FLOAT SWITCH OR ULTRASONIC LSHH CONTACT IS ACTIVATED.

COPYRIGHT: ARCADIS U.S., INC. 2016

IF THIS BAR IS NOT 1" INDICATED SCALE IS INCORRECT

NO.	DATE	ISSUED FOR	BY
0	JUL 2019	BIDDING	HG

SEALS

GEORGIA REGISTERED No. PE039674 PROFESSIONAL ENGINEER 07/31/19

ARCADIS A Joint Venture
BPA
2839 Paces Ferry Road
Suite 900
Atlanta, GA 30339
Tel: 770-431-8666
Fax: 770-435-2666
www.arcadis-us.com

ATLANTA, GEORGIA
CITY OF ATLANTA
DEPARTMENT OF WATERSHED MANAGEMENT

EAST AREA WATER QUALITY CONTROL FACILITY IMPROVEMENTS

W.01.02.0085

SHEET TITLE

POLYMER SYSTEM P&ID

DATE:	JULY 2019
PROJECT NO.:	GABPA134
DESIGNED BY:	F. ARANGO
DRAWN BY:	C. MARTINI
CHECKED BY:	E. KOWALSKI

SCALE: NONE

I-014

SHEET 141 OF 150

User:TTHOMAS Spec:AUS-NCSMOD File:I:\ACAD\PROJ\GABPA134 - CSO GROUP 1\BID PACKAGE 2\SHEETS\INSTRUMENTATION\I-014.DWG Scale:1:1/2 SavedDate:5/31/2019 Time:14:27 Plot Date: Thomas, Travis; 7/31/2019; 14:14 ; Layout:141

PIPING, EQUIPMENT AND NOTES SHOWN IN LIGHT WEIGHT LINE ARE NOT PART OF THIS CONTRACT. SHOWN FOR INFORMATION ONLY.

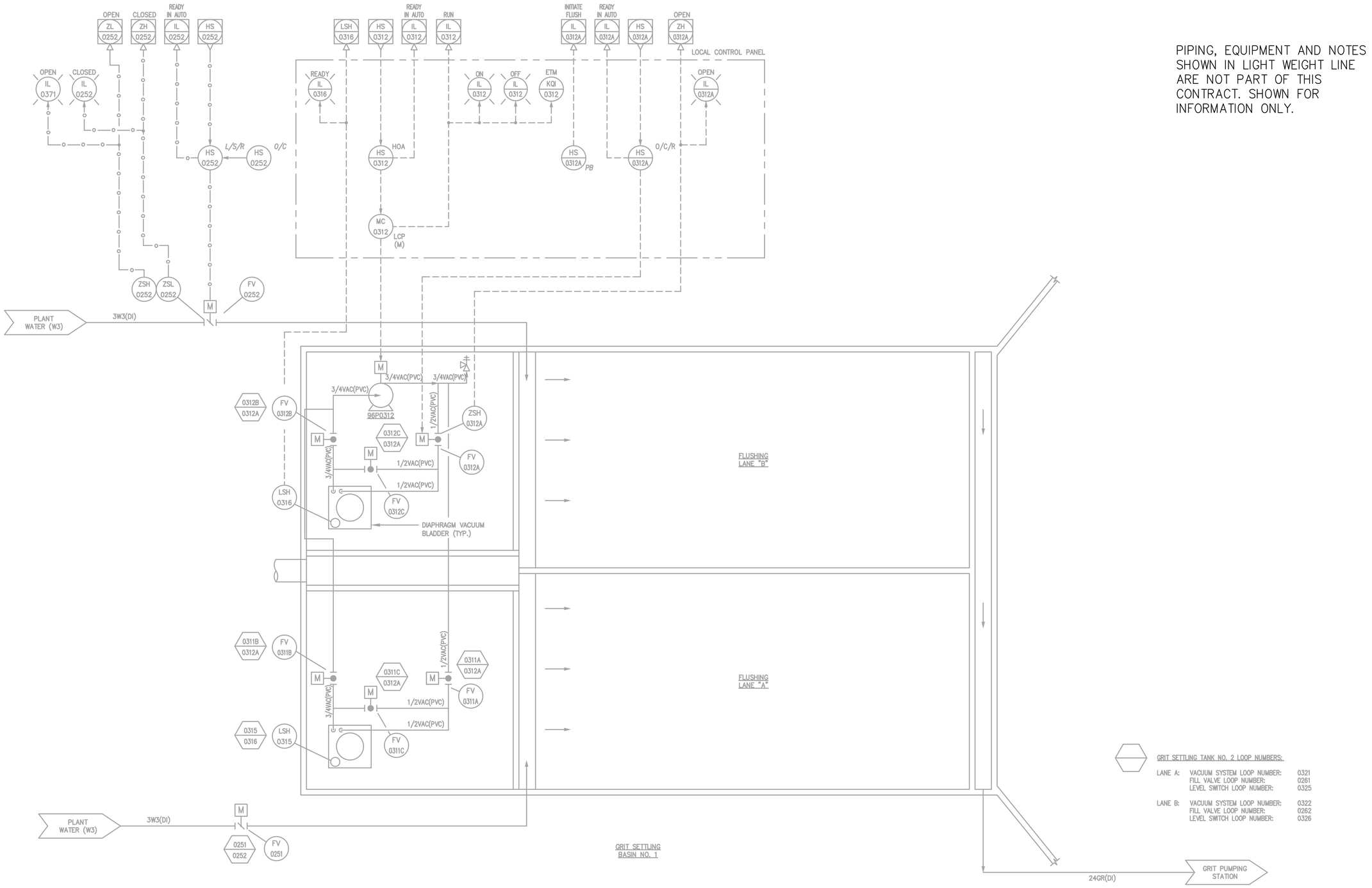

COPYRIGHT: ARCADIS U.S., INC. 2016

IF THIS BAR IS NOT 1" INDICATED SCALE IS INCORRECT

NO.	DATE	ISSUED FOR	BY
0	JUL 2019	BIDDING	HG

SEALS

GEORGIA REGISTERED No. PE039674 PROFESSIONAL ENGINEER 01/31/19

ARCADIS A Joint Venture
BPA
2839 Paces Ferry Road
Suite 900
Atlanta, GA 30339
Tel: 770-431-8666
Fax: 770-435-2666
www.arcadis-us.com

ATLANTA, GEORGIA
CITY OF ATLANTA
DEPARTMENT OF WATERSHED MANAGEMENT

EAST AREA WATER QUALITY CONTROL FACILITY IMPROVEMENTS

W.01.02.0085

SHEET TITLE

GRIT SETTLING TANK FLUSHING SYSTEM P&ID

DATE:	JULY 2019
PROJECT NO.:	GABPA134
DESIGNED BY:	F. ARANGO
DRAWN BY:	C. MARTINI
CHECKED BY:	E. KOWALSKI

SCALE: NONE

I-015

SHEET 142 OF 150

User:TTHOMAS Spec:AUS-NCSMOD File:I:\ACAD\PROJ\GABPA134 - CSO GROUP 1\BID PACKAGE 2\SHEETS\INSTRUMENTATION\I-015.DWG Scale:1:1/2 SavedDate:5/31/2019 Time:14:28 Plot Date: Thomas, Travis; 7/31/2019; 14:16 ; Layout:142

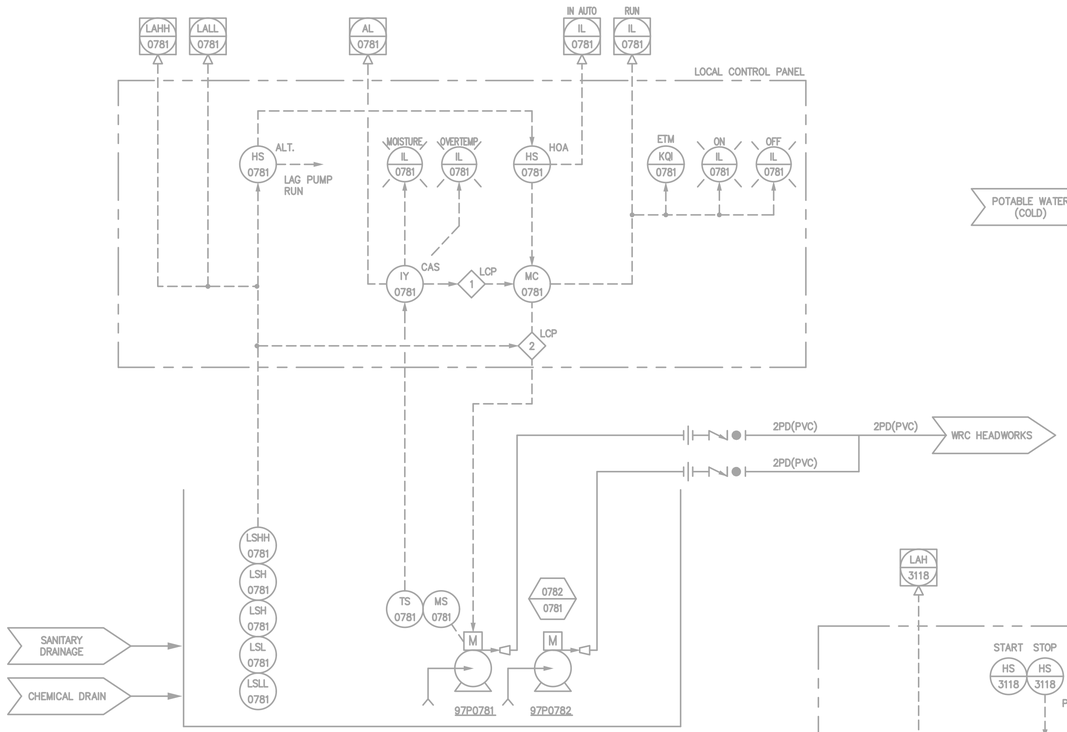

SANITARY PUMPING STATION

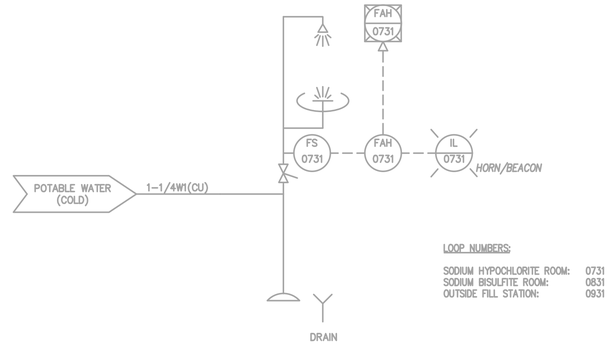

LOOP NUMBERS:

SODIUM HYPOCHLORITE ROOM: 0731
SODIUM BISULFITE ROOM: 0831
OUTSIDE FILL STATION: 0931

SAFETY SHOWER AND EYE WASH STATION

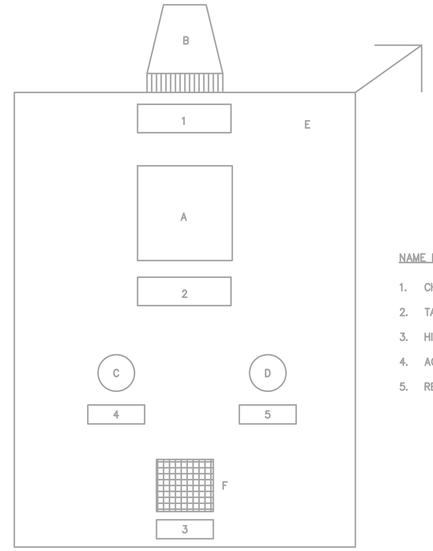

NAME PLATE LEGEND:

1. CHEMICAL FILL PANEL
2. TANK LEVEL
3. HIGH ALARM
4. ACKNOWLEDGE
5. RESET

ITEM	DESCRIPTION	MANUFACTURER	MODEL
A.	LEVEL INDICATOR	PRECISION DIGITAL	PD655-46 (WITH 4~20MA OUTPUT)
B.	BEACON	EDWARDS SIGNALING	104ST SERIES ADAPTABEACON STROBES NEMA 4X
C.	ACKNOWLEDGE PUSH BUTTON	ALLEN BRADLEY	800T SERIES 30.5MM NEMA TYPE
D.	RESET PUSH BUTTON	ALLEN BRADLEY	800T SERIES 30.5MM NEMA TYPE
E.	316 SS PANEL 18x24x12 MINIMUM		18x24x12 316SS
F.	HORN	EDWARDS SIGNALING	ADAPTAHORN VIBRATION HORN 876 & 877 SERIES NEMA 4X

CHEMICAL FILL STATION

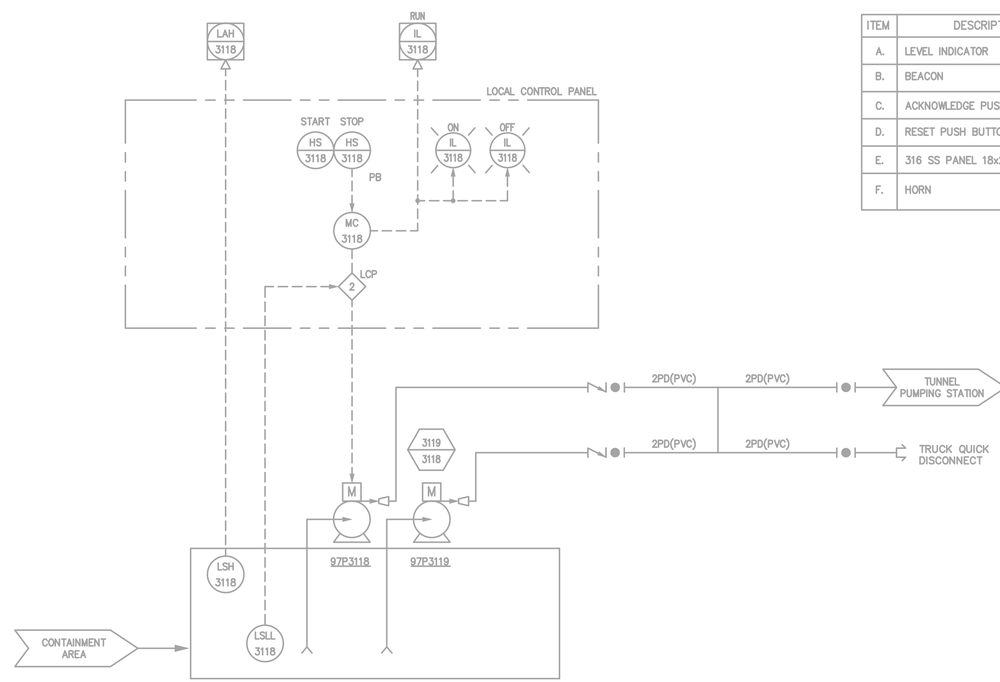

CHEMICAL BUILDING WASTE CHEMICAL PUMPS

INTERLOCK SCHEDULE

1. STOP PUMP UPON HIGH TEMPERATURE. HIGH TEMPERATURE ALARM AUTOMATICALLY RESETS UPON PUMP COOLING. STOP PUMP UPON MOISTURE INTRUSION AND REQUIRE MANUAL RESET.
2. SHUT DOWN ALL PUMP UPON LOW LOW LEVEL IN THE WETWELL OR SUMP.

PIPING, EQUIPMENT AND NOTES SHOWN IN LIGHT WEIGHT LINE ARE NOT PART OF THIS CONTRACT. SHOWN FOR INFORMATION ONLY.

COPYRIGHT: ARCADIS U.S., INC. 2016

IF THIS BAR IS NOT 1" INDICATED SCALE IS INCORRECT

NO.	DATE	ISSUED FOR	BY
0	JUL 2019	BIDDING	HG

SEALS

GEORGIA REGISTERED No. PE039674 PROFESSIONAL ENGINEER 07/31/19

ARCADIS BPA
A Joint Venture
2839 Paces Ferry Road
Suite 900
Atlanta, GA 30339
Tel: 770-431-8666
Fax: 770-435-2666
www.arcadis-us.com

ATLANTA, GEORGIA
CITY OF ATLANTA
DEPARTMENT OF WATERSHED MANAGEMENT

EAST AREA WATER QUALITY CONTROL FACILITY IMPROVEMENTS

W.01.02.0085

SHEET TITLE

MISCELLANEOUS P&ID DETAILS

DATE:	JULY 2019
PROJECT NO.:	GABPA134
DESIGNED BY:	F. ARANGO
DRAWN BY:	C. MARTINI
CHECKED BY:	E. KOWALSKI

SCALE: NONE

I-016

SHEET 143 OF 150

User: TTHOMAS Spec: AUS-NCSMOD File: G:\GA02DATA\AUTOCAD\ACAD\PROJ\GABPA134 - CSO GROUP 1\BID PACKAGE 2\SHEETS\INSTRUMENTATION\I-016.DWG Scale: 1:1/2 SavedDate: 5/31/2019 Time: 13:27 Plot Date: Thomas, Travis; 7/31/2019; 17:15 ; Layout: 143

User:THOMAS Spec:AUS-NCSMOD File:I:\ACAD\PROJ\GABPA134 - CSO GROUP 1\BID PACKAGE 2\SHEETS\INSTRUMENTATION\I-017.DWG Scale:1:1 SavedDate:7/23/2019 Time:16:50 Plot Date: Thomas, Travis; 7/31/2019; 14:19 ; Layout:144

SPEED COMMAND SC 3501 | DRIVE S/S HS 3501 | SPEED FEEDBACK SI 3501 | O/L IA 3501 | E-STOP YN 3501B | VFD FAIL XA 3501B | IN-REMOTE YN 3501 | RUN MN 3501 | TORQUE WARNING XA 3501C | TORQUE ALARM XA 3501D | HIGH MOTOR WINDING TEMPERATURE XA 3501E | SLUDGE TANK LEVEL LI 3502

→ I-018 TO FOXBORO DISPLAYS

INTERLOCK SCHEDULE

1. STOP DRIVE UPON OPERATION OF THE EMERGENCY STOP PUSHBUTTON.
2. STOP DRIVE UPON HIGH-HIGH TORQUE. REQUIRES MANUAL RESET.
3. HIGH TORQUE WARNING
4. STOP DRIVE UPON HIGH MOTOR WINDING TEMPERATURE. REQUIRES MANUAL RESET.

PIPING, EQUIPMENT AND NOTES SHOWN IN LIGHT WEIGHT LINE ARE NOT PART OF THIS CONTRACT. SHOWN FOR INFORMATION ONLY.

A

LOCAL CONTROL STATION

ON LI 3501 | HIGH-WINDING TEMP. LI 3501 | HIGH TORQUE LI 3501 | HIGH-HIGH TORQUE LI 3501

O/L IA 3501 | VFD FAIL UA 3501 | PB 3501 RESET | HS 3501 E-STOP

SI 3501 SPEED | PB 3501 S/S | SC 3501 SPEED | HS 3501 L/O/R

VFD PANEL

VFD 1 | VFD 2 | VFD 3 | VFD 4

BELT FILTER PRESS CONTROL PANEL CP-BFP

SUPPLIED UNDER SECTION 11521

CONTINUED ON I-018

LIT 3502

WSHH 3501 | WSH 3501 | TSH 3501

M

I-005 SEDIMENTATION BASIN SLUDGE PUMPS → 8SL(HDPE) 8SL(DI)

10OF(DI)

SLUDGE HOLDING TANK 81T3501

LE 3502 U

10DR(DI) 8DR(DI)

6TS(DI) 6TS(DI) 8TS(DI) → I-018 BFP FEED PUMP

6TS(HDPE)

I-019 BELT FILTER PRESS

10DR(DI) → I-002 PLANT DRAIN

COPYRIGHT: ARCADIS U.S., INC. 2016

IF THIS BAR IS NOT 1" INDICATED SCALE IS INCORRECT

NO.	DATE	ISSUED FOR	BY
0	JUL 2019	BIDDING	HG

SEALS

GEORGIA REGISTERED No. PE039674 PROFESSIONAL ENGINEER 07/31/19

ARCADIS A Joint Venture
BPA
2839 Paces Ferry Road
Suite 900
Atlanta, GA 30339
Tel: 770-431-8666
Fax: 770-435-2666
www.arcadis-us.com

ATLANTA, GEORGIA
CITY OF ATLANTA
DEPARTMENT OF WATERSHED MANAGEMENT

EAST AREA WATER QUALITY CONTROL FACILITY IMPROVEMENTS

W.01.02.0085

SHEET TITLE

SLUDGE THICKENING P&ID

DATE: JULY 2019
PROJECT NO.: GABPA134
DESIGNED BY: M. BRONSTEIN
DRAWN BY: J. BROWN
CHECKED BY: E. KOWALSKI

SCALE: NONE

I-017

SHEET 144 OF 150

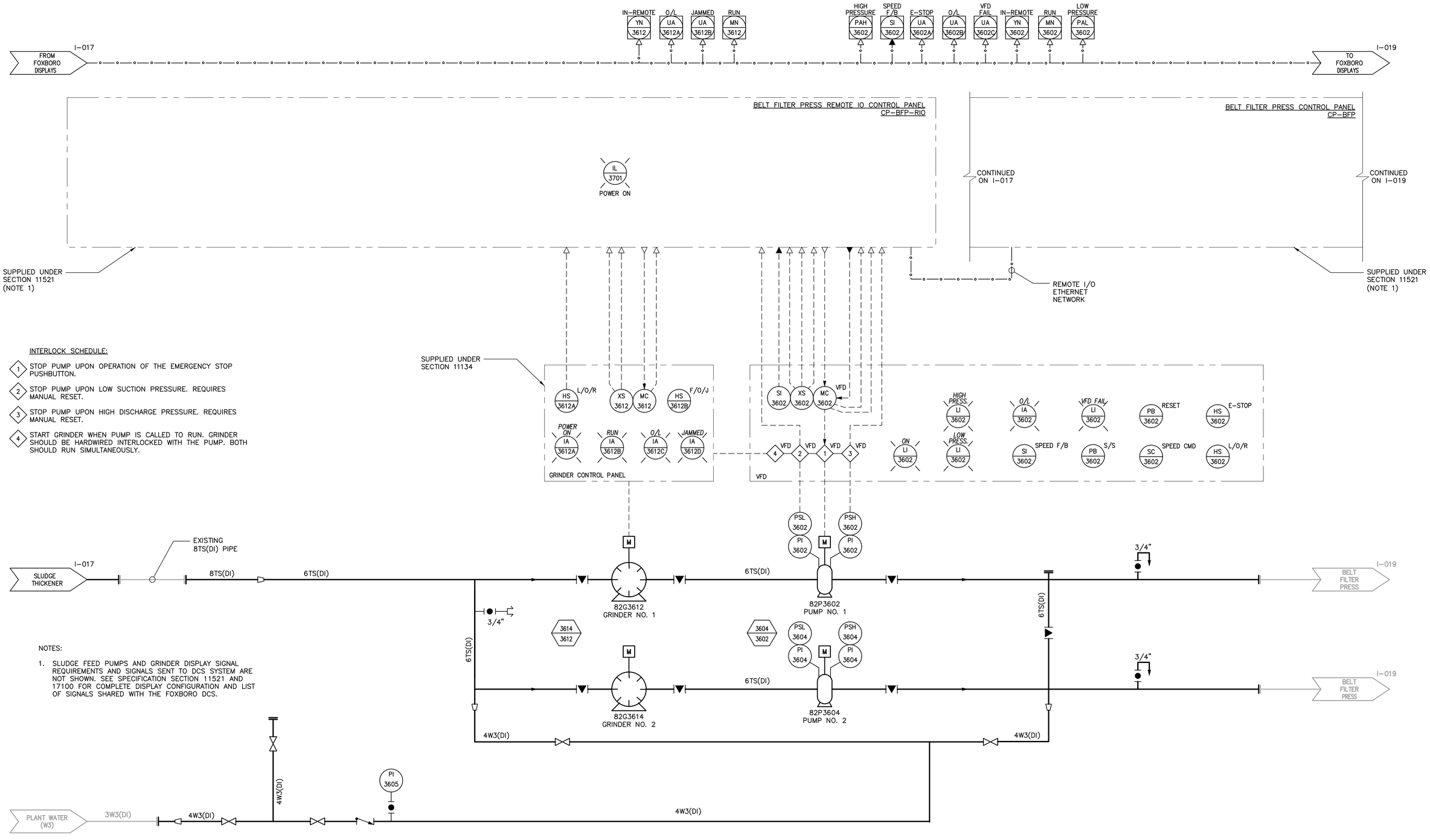

User: TTHOMAS Spec: AUS-NCSMOD File:I:\ACAD\PROJ\GABPA134 - CSO GROUP 1\BID PACKAGE 2\SHEETS\INSTRUMENTATION\I-018.DWG Scale:1:1 SavedDate:5/31/2019 Time:14:28 Plot Date: Thomas, Travis; 7/31/2019; 17:09 ; Layout:145

COPYRIGHT: ARCADIS U.S., INC. 2016

IF THIS BAR IS NOT 1" INDICATED SCALE IS INCORRECT

NO.	DATE	ISSUED FOR	BY
0	JUL 2019	BIDDING	HG

SEALS

GEORGIA REGISTERED No. PE039674 PROFESSIONAL ENGINEER 07/31/19

ARCADIS A Joint Venture
BPA
2839 Paces Ferry Road
Suite 900
Atlanta, GA 30339
Tel: 770-431-8666
Fax: 770-435-2666
www.arcadis-us.com

ATLANTA, GEORGIA
CITY OF ATLANTA
DEPARTMENT OF WATERSHED MANAGEMENT

EAST AREA WATER QUALITY CONTROL FACILITY IMPROVEMENTS

W.01.02.0085

SHEET TITLE

SOLIDS PROCESSING BUILDING P&ID

DATE:	JULY 2019
PROJECT NO.:	GABPA134
DESIGNED BY:	M. BRONSTEIN
DRAWN BY:	J. BROWN
CHECKED BY:	E. KOWALSKI

SCALE: NONE

I-018

SHEET 145 OF 150

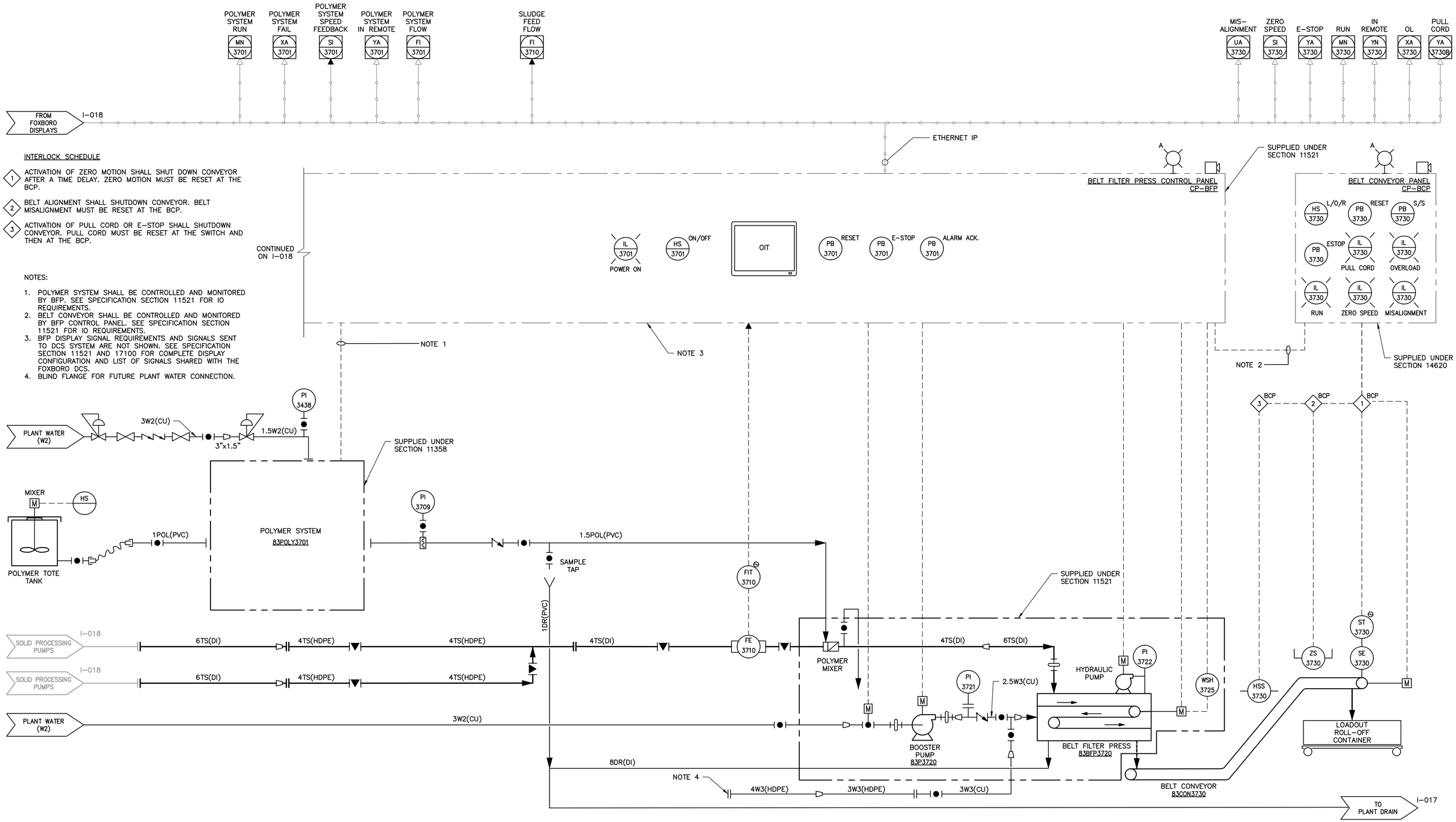

User:THOMAS Spec:AUS-NCSMOD File:I:\ACAD\PROJ\GABPA134 - CSO GROUP 1\BID PACKAGE 2\SHEETS\INSTRUMENTATION\I-019.DWG Scale:1:1 SavedDate:3/28/2019 Time:16:02 Plot Date: Thomas, Travis; 7/31/2019; 14:22 ; Layout:146

COPYRIGHT: ARCADIS U.S., INC. 2016

IF THIS BAR IS NOT 1" INDICATED SCALE IS INCORRECT

NO.	DATE	ISSUED FOR	BY
0	JUL 2019	BIDDING	HG

SEALS

GEORGIA REGISTERED No. PE039674 PROFESSIONAL ENGINEER 07/31/19

ARCADIS A Joint Venture
BPA
2839 Paces Ferry Road
Suite 900
Atlanta, GA 30339
Tel: 770-431-8666
Fax: 770-435-2666
www.arcadis-us.com

ATLANTA, GEORGIA
CITY OF ATLANTA
DEPARTMENT OF WATERSHED MANAGEMENT

EAST AREA WATER QUALITY CONTROL FACILITY IMPROVEMENTS

W.01.02.0085

SHEET TITLE

SLUDGE DEWATERING & POLYMER SYSTEM P&ID

DATE:	JULY 2019
PROJECT NO.:	GABPA134
DESIGNED BY:	F. ARANGO
DRAWN BY:	C. MARTINI
CHECKED BY:	E. KOWALSKI

SCALE: NONE

I-019

SHEET 146 OF 150

PIPING, EQUIPMENT AND NOTES SHOWN IN LIGHT WEIGHT LINE ARE NOT PART OF THIS CONTRACT. SHOWN FOR INFORMATION ONLY.

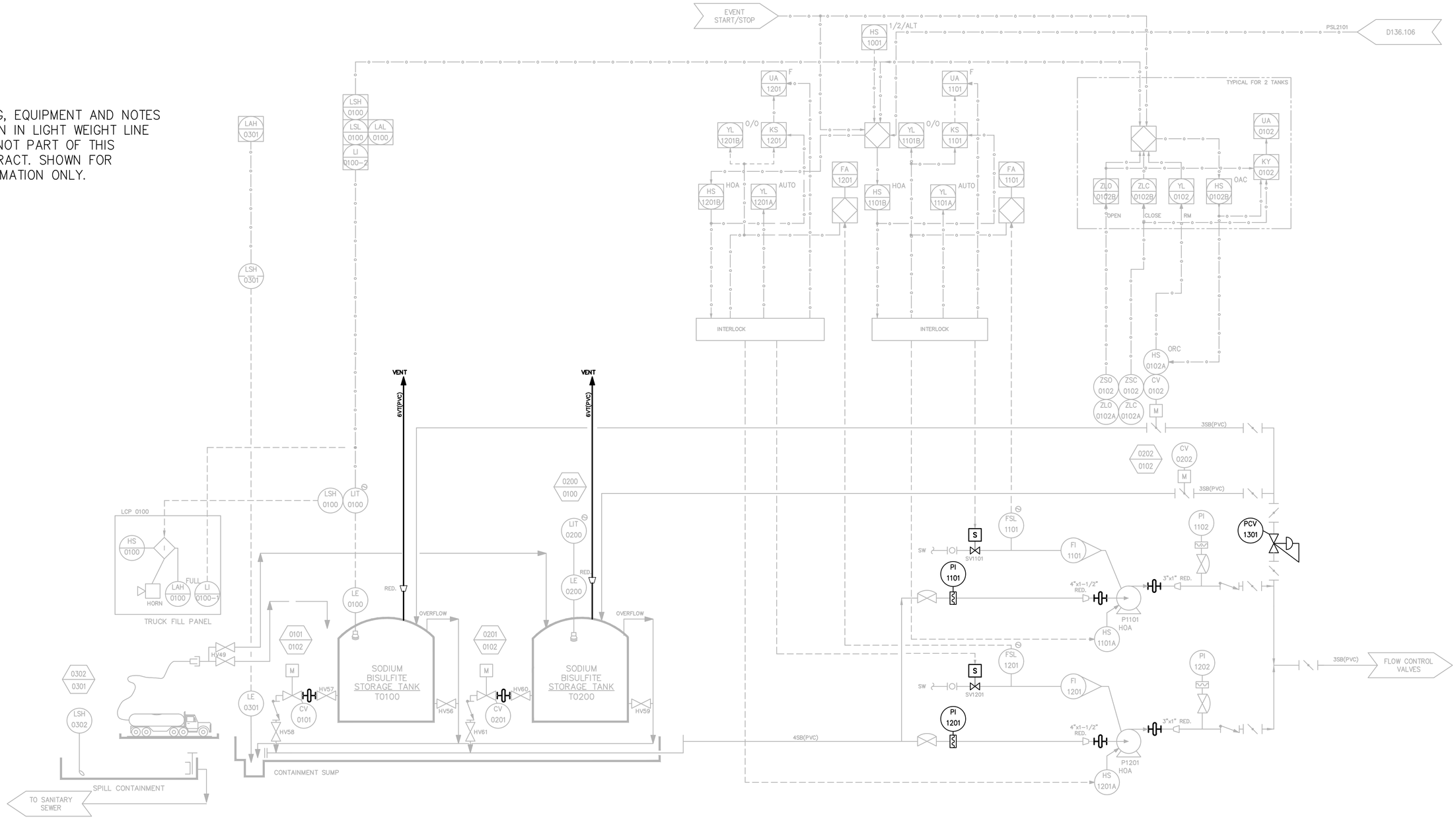

COPYRIGHT: ARCADIS U.S., INC. 2016

IF THIS BAR IS NOT 1" INDICATED SCALE IS INCORRECT

NO.	DATE	ISSUED FOR	BY
0	JUL 2019	BIDDING	HG

SEALS

GEORGIA REGISTERED No. PE039674 PROFESSIONAL ENGINEER 01/31/19

ARCADIS
BPA
A Joint Venture
2839 Paces Ferry Road
Suite 900
Atlanta, GA 30339
Tel: 770-431-8666
Fax: 770-435-2666
www.arcadis-us.com

ATLANTA, GEORGIA
CITY OF ATLANTA
DEPARTMENT OF WATERSHED MANAGEMENT

EAST AREA WATER QUALITY CONTROL FACILITY IMPROVEMENTS

W.01.02.0085

SHEET TITLE

CUSTER AVENUE – SODIUM BISULFITE AND DOSING FACILITIES P&ID

DATE:	JULY 2019
PROJECT NO.:	GABPA134
DESIGNED BY:	H. GIACOMIN
DRAWN BY:	J. BROWN
CHECKED BY:	A. SHARP

SCALE: NONE

I-020

SHEET 147 OF 150

User: TTHOMAS Spec: AUS-NCSMOD File: I:\ACAD\PROJ\GABPA134 - CSO GROUP 1\BID PACKAGE 2\SHEETS\INSTRUMENTATION\I-020.DWG Scale: 1:1 SavedDate: 3/28/2019 Time: Plot Date: Thomas, Travis; 7/31/2019; 14:24 ; Layout: I47

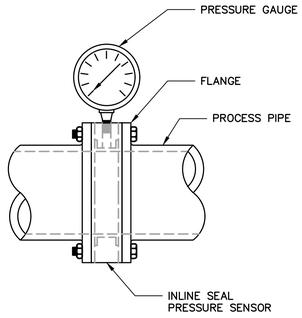

1 – IN–LINE SEAL AND PRESSURE GAUGE INSTALLATION DETAIL

NOT TO SCALE

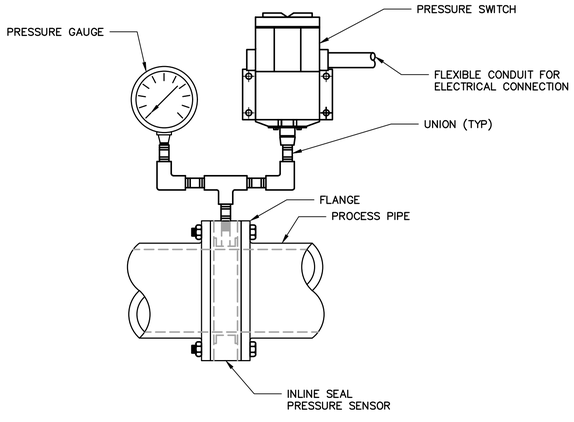

GENERAL NOTES:

A. PRESSURE GAUGE AND SWITCH ASSEMBLY SHALL BE FULLY SUPPORTED.

2 – IN–LINE SEAL WITH PRESSURE GAUGE AND PRESSURE SWITCH INSTALLATION DETAIL

NOT TO SCALE

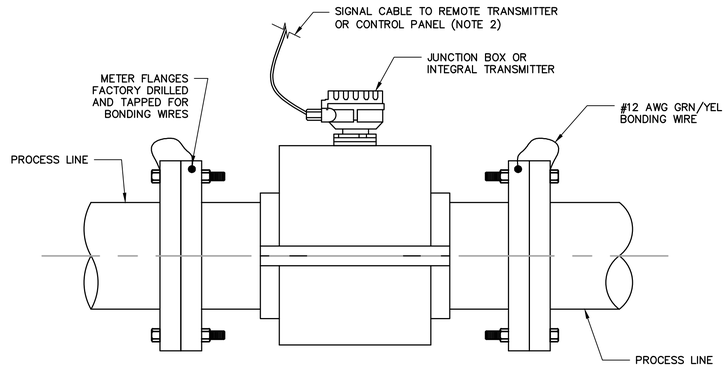

GENERAL NOTES:

A. FLOW METER DETAIL SHOWN SHALL BE USED FOR BOTH ELECTRICALLY NON–CONDUCTIVE AND CONDUCTIVE TYPE PIPELINES.
B. BOND MAGNETIC FLOW METER TO ONE OF THE FOLLOWING ACCEPTABLE GROUNDS:
   a. METALLIC WATER PIPE IF BURIED PORTION IS MORE THAN 10 FEET.
   b. STRUCTURAL STEEL
C. REMOTE TRANSMITTER SHALL BE LOCATED IN A SUITABLE LOCATION AND TRANSMITTER SHALL BE PEDESTAL MOUNTED OR WALL MOUNTED AS REQUIRED.

NOTES:

1. GROUND WIRE SHALL BE NO. 12AWG INSULATED. IF LENGTH OF GROUND WIRE IS MORE THAN 6 FEET, INSTALL CONDUCTOR IN 3/4" CONDUIT.
2. SIGNAL CABLE SHALL BE INSTALLED IN CONDUIT. CONDUIT NOT SHOWN.
3. PROVIDE POWER TO TRANSMITTER. POWER WIRING AND CONDUIT NOT SHOWN.

3 – MAGNETIC FLOW METER INSTALLATION

NOT TO SCALE

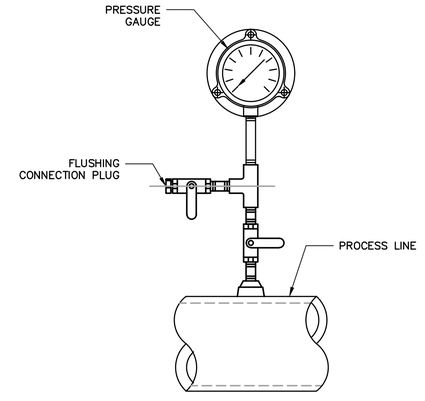

NOTE:

1. PROVIDE REDUCING BUSHINGS IN CONNECTION TO EXISTING AS NECESSARY.

4 – PRESSURE GAUGE INSTALLATION DETAIL

NOT TO SCALE

COPYRIGHT:
ARCADIS U.S., INC.
2016

IF THIS BAR IS NOT 1" INDICATED SCALE IS INCORRECT

NO.	DATE	ISSUED FOR	BY
0	JUL 2019	BIDDING	HG

SEALS

GEORGIA REGISTERED No. PE039674 PROFESSIONAL ENGINEER 07/31/19

ARCADIS
BPA
A Joint Venture
2839 Paces Ferry Road
Suite 900
Atlanta, GA 30339
Tel: 770–431–8666
Fax: 770–435–2666
www.arcadis–us.com

ATLANTA, GEORGIA
CITY OF ATLANTA
DEPARTMENT OF WATERSHED MANAGEMENT

EAST AREA WATER QUALITY CONTROL
FACILITY IMPROVEMENTS

W.01.02.0085

SHEET TITLE

INSTRUMENT
INSTALLATION DETAILS NO. 1

DATE:	JULY 2019
PROJECT NO.:	GABPA134
DESIGNED BY:	F. ARANGO
DRAWN BY:	C. MARTINI
CHECKED BY:	E. KOWALSKI

SCALE: NONE

I–021

SHEET 148 OF 150

User:TTHOMAS Spec:AUS-NCSM0D File:I:\ACAD\PROJ\GABPA134 - CSO GROUP 1\BID PACKAGE 2\SHEETS\INSTRUMENTATION\I-021.DWG Scale:1:1 SavedDate:5/31/2019 Time:14:19 Plot Date: Thomas, Travis; 7/31/2019; 14:25 ; Layout:I48

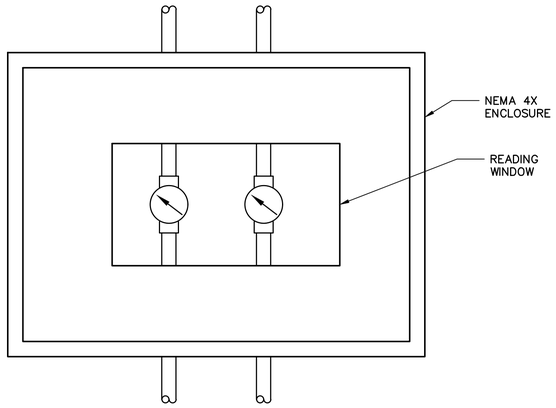

1 — FLUIDIZING FLOW METER PANEL

NOT TO SCALE

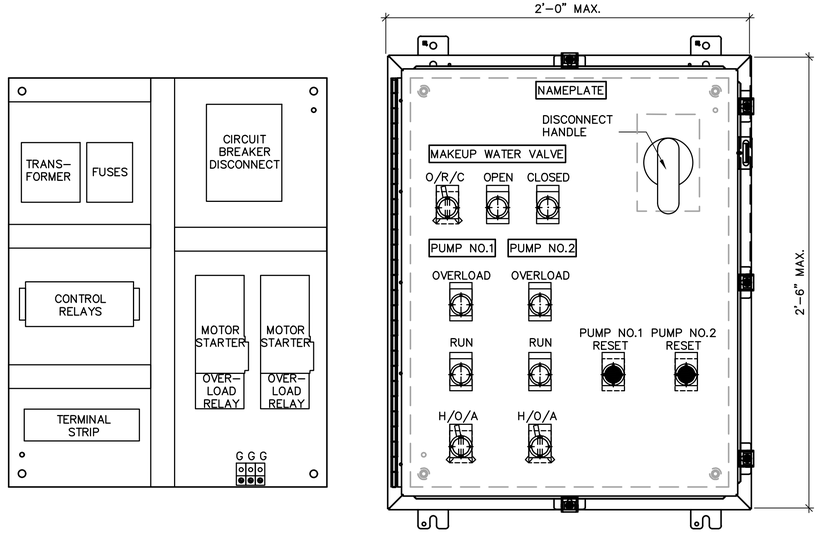

NOTE:

1. SAMPLING POINT 1 CONTROL PANEL, ONLY HAS CONTROLS RELATED TO THE MAKEUP PLANT WATER VALVE.

2 — SAMPLING POINT CONTROL PANEL

NOT TO SCALE

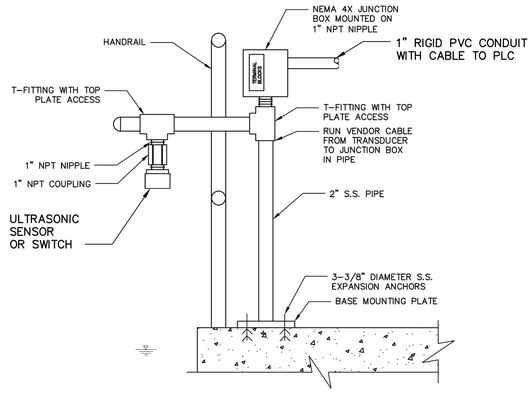

GENERAL NOTES:

A. POSTION LEVEL SWITCH 1 FOOT ABOVE MAXIMUM WATER SURFACE LEVEL.

3 — ULTRASONIC LEVEL ELEMENT MOUNTING DETAIL

NOT TO SCALE

COPYRIGHT:
ARCADIS U.S., INC.
2016

IF THIS BAR IS NOT 1" INDICATED SCALE IS INCORRECT

NO.	DATE	ISSUED FOR	BY
0	JUL 2019	BIDDING	HG

SEALS

GEORGIA REGISTERED No. PE039674 PROFESSIONAL ENGINEER 07/31/19

ARCADIS
BPA
A Joint Venture
2839 Paces Ferry Road
Suite 900
Atlanta, GA 30339
Tel: 770–431–8666
Fax: 770–435–2666
www.arcadis–us.com

ATLANTA, GEORGIA
CITY OF ATLANTA
DEPARTMENT OF WATERSHED MANAGEMENT

EAST AREA WATER QUALITY CONTROL FACILITY IMPROVEMENTS

W.01.02.0085

SHEET TITLE

INSTRUMENT INSTALLATION DETAILS 2

DATE:	JULY 2019
PROJECT NO.:	GABPA134
DESIGNED BY:	F. ARANGO
DRAWN BY:	C. MARTINI
CHECKED BY:	E. KOWALSKI

SCALE: NONE

I–022

SHEET 149 OF 150

User:TTHOMAS Spec:AUS-NCSMOD File:I:\ACAD\PROJ\GABPA134 – CSO GROUP 1\BID PACKAGE 2\SHEETS\INSTRUMENTATION\I–022.DWG Scale:1:1 SavedDate:7/29/2019 Time:11:07 Plot Date: Thomas, Travis; 7/31/2019, 14:27 : Layout:149

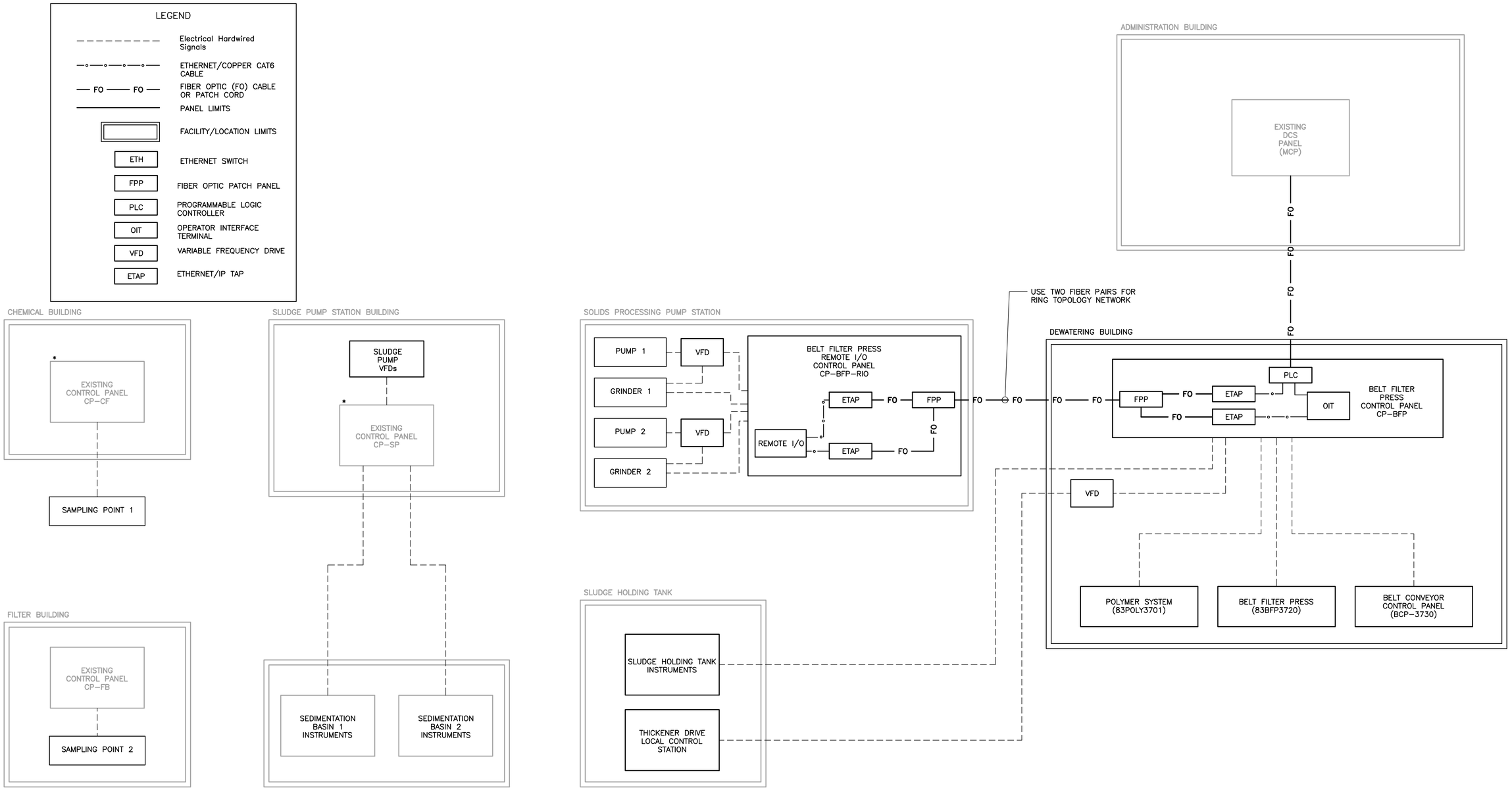

NOTES:

* PANELS TO BE RETROFIT BY SECTION 17500.

COPYRIGHT: ARCADIS U.S., INC. 2016

IF THIS BAR IS NOT 1" INDICATED SCALE IS INCORRECT

NO.	DATE	ISSUED FOR	BY
0	JUL 2019	BIDDING	HG

SEALS

GEORGIA REGISTERED No. PE039674 PROFESSIONAL ENGINEER 07/31/19

ARCADIS A Joint Venture
BPA
2839 Paces Ferry Road
Suite 900
Atlanta, GA 30339
Tel: 770–431–8666
Fax: 770–435–2666
www.arcadis–us.com

ATLANTA, GEORGIA
CITY OF ATLANTA
DEPARTMENT OF WATERSHED MANAGEMENT

EAST AREA WATER QUALITY CONTROL FACILITY IMPROVEMENTS

W.01.02.0085

SHEET TITLE

CONTROL SYSTEM BLOCK DIAGRAM

DATE:	JULY 2019
PROJECT NO.:	GABPA134
DESIGNED BY:	F. ARANGO
DRAWN BY:	Z. AMIN
CHECKED BY:	E. KOWALSKI

SCALE: X" = XX'

I–023

SHEET 150 OF 150

User: TTHOMAS Spec: AUS-NCSMOD File:i:\ACAD\PROJ\GABPA134 – CSO GROUP 1\BID PACKAGE 2\SHEETS\INSTRUMENTATION\I–023.DWG Scale:1:1 SavedDate:7/29/2019 Time:10:35 Plot Date: Thomas, Travis; 7/31/2019; 14:29 ; Layout:I50