PIPING

- GATE VALVE
- GLOBE VALVE
- BUTTERFLY VALVE
- CHECK VALVE
- STOP CHECK VALVE
- AUTOMATIC RECIRCULATION CHECK VALVE
- PLUG VALVE
- 3-WAY PLUG VALVE (2-PORT)
- 3-WAY PLUG VALVE (3-PORT)
- 4-WAY PLUG VALVE (4-PORT)
- 3-WAY VALVE
- ANGLE VALVE
- RELIEF OR SAFETY VALVE
- HOSE GATE DRAIN VALVE
- PINCH VALVE
- NEEDLE VALVE
- DIAPHRAGM VALVE
- BALL VALVE
- (P) SELF-CONTAINED PRESSURE REDUCING (REGULATING VALVE)
- (SR) SURGE RELIEF VALVE
- KNIFE GATE VALVE
- CORPORATION STOP
- (A) AIR RELEASE VALVE
- (V) VACUUM VALVE
- (AV) AIR AND VACUUM VALVE
- LOCKED OPEN
- LOCKED CLOSED

- BP BACKFLOW PREVENTER
- VB VACUUM BREAKER
- MS MOISTURE SEPARATOR
- M IN-LINE FLOW METER
- SIGHT FLOW INDICATOR
- FLEXIBLE HOSE
- EXPANSION ELEMENT (JOINT)
- FLEXIBLE BALL JOINT
- BASKET TYPE STRAINER
- TEE TYPE STRAINER
- Y-TYPE STRAINER
- CONICAL STRAINER
- DUPLEX STRAINER
- STEAM TRAP ASSEMBLY
- SLEEVE COUPLING (SC)
  HARNESSED SLEEVE COUPLING (HSC)
  INSULATED SLEEVE COUPLING (ISC)
- FLANGED COUPLING ADAPTER (FCA)
- DRAINER ASSEMBLY
- SAMPLE COOLER
- INSULATING FLANGE (I.F.)
- RESTRICTING ORIFICE
- STRAIGHTENING VANE
- RUPTURE DISK
- PIPE GUIDE
- PIPE WITH HEATING CABLE
- DRIP POCKET ASSEMBLY
- UNION
- PIPE ANCHOR
- REDUCER
- DISCHARGE ELBOW ASSEMBLY
- REMOVABLE PLUG
- REMOVABLE CAP
- WELDED CAP
- BF BLIND FLANGE
- CO CLEANOUT
- YH YARD HYDRANT
- AC AIR COCK
- HB HOSE BIBB
- WH WALL HYDRANT
- QUICK DISCONNECT COUPLING
- EXHAUST TO ATMOSPHERE (INSIDE)
- EXHAUST TO ATMOSPHERE (OUTSIDE)

VALVE OPERATORS

- (C) CYLINDER
- (D) DIAPHRAGM
- (M) MOTOR
- (S) SOLENOID
- (D) DIAPHRAGM WITH HANDWHEEL
- CHAINWHEEL
- (F) FLOAT

HEATING, VENTILATION AND AIR CONDITIONING

- C COOLING COIL
- H C HEATING COIL
- DAMPER
- FLEXIBLE DUCT CONNECTION
- RECTANGLULAR ELBOW W/ TURNING VANES (INDICATES TURNING VANES)
- TEE W/TURNING VANES
- ADJUSTABLE EXTRACTING DEVICE
- ADJUSTABLE SPLITTER DAMPER
- R RISE IN RESPECT TO AIR FLOW
- D DROP IN RESPECT TO AIR FLOW
- SPLITTER DAMPER (ADJUSTABLE)
- SQUARE OR RECTANGULAR TO ROUND TRANSITION
- SUPPLY OR OUTSIDE AIR DUCT SECTION
- RETURN AIR DUCT SECTION
- EXHAUST AIR DUCT SECTION
- CEILING DIFFUSER (W/BLANK OFF PLATE INDICATED)
- SIDEWALL (RA OR EA) REGISTER OR GRILLE
- SIDEWALL (SA) REGISTER OR GRILLE
- (3'-0") FINNED TUBE RADIATION - LENGTH OF ELEMENT SHOWN
- SQUARE OR RECTANGULAR DIFFUSER
- ROUND DIFFUSER
- LINEAR OR SLOT DIFFUSER
- ROUND FLEXIBLE DUCT

- DP DEWPOINT TRANSMITTER/SENSOR
- SP STATIC PRESSURE TRANSMITTER/SENSOR
- TT TEMPERATURE TRANSMITTER/SENSOR
- MOTOR STARTER
- SS AIR FLOW SWITCH (SAIL SWITCH)
- (M) DAMPER MOTOR
- SD SMOKE DETECTOR
- SW SELECTOR SWITCH
- PS POSITION SWITCH
- PE PNEUMATIC ELECTRIC SWITCH
- P POSITIONER
- RC RECEIVER CONTROLLER
- EP ELECTRIC PNEUMATIC SWITCH
- FS FREEZESTAT
- CD COMBUSTION DETECTOR
- C CONTROLLER
- M MANOMETER
- (TS) TEMPERATURE SENSOR
- (A) MAIN AIR SUPPLY
- (TG) TEMPERATURE GAUGE
- (PG) PRESSURE GAUGE
- (H) HUMIDISTAT
- INDICATING LIGHT
- (TC) THERMOSTAT
  - SYMBOL
    - L - LOCAL ADJ
    - C - CONCEALED ADJ
    - A - AVERAGING
    - G - GUARD
- (DPS) DIFFERENTIAL PRESSURE SWITCH
- ELECTRIC WIRING
- CONTROL LINE

PIPING ABBREVIATIONS

AS	AMMONIA SOLUTION
AV	AMMONIA VACUUM
BD	BLOWDOWN
BFP	BACKFLOW PREVENTER
BL	BLOWER PIPING
CA	COMPRESSED AIR
CF	CHEMICAL FEED
CG	CHLORINE GAS
CL	CHLORINE LIQUID
CS	CHLORINE SOLUTION
CV	CHLORINE VACUUM
CHR	CHILLED WATER RETURN
CHS	CHILLED WATER SUPPLY
CR	CONDENSATE RETURN
CWR	CONDENSER WATER RETURN
CWS	CONDENSER WATE SUPPLY
D	DRIP
DCW	DOMESTIC COLD WATER
DCW(T)	DOMESTIC TEPID WATER
DHW	DOMESTIC HOT WATER
DHWR	DOMESTIC HOT WATER RETURN
DIP	DUCTILE IRON PIPE
DIS	DEIONIZED STEAM
DIW	DEIONIZED WATER
DMW	DEMINERALIZED WATER
DOS	DIESEL OIL SUPPLY
DOR	DIESEL OIL RETURN
FOS	FUEL OIL SUPPLY
FOR	FUEL OIL RETURN
FW	FEEDWATER
FWSP	FINISHED WATER SAMPLE LINE
HPS	HIGH PRESSURE STEAM (50 PSIG & ABOVE)
HTWR	HIGH TEMP WATER RETURN
HWTS	HIGH TEMP WATER SUPPLY
HWS	HEATING HOT WATER SUPPLY
HWR	HEATING HOT WATER RETURN
IA	INSTRUMENT AIR
LPS	LOW PRESSURE STEAM (BELOW 50 PSIG)
NC	NORMALLY CLOSED
NG	NATURAL GAS
NO	NORMALLY OPEN
R	RELIEF LINE
RCP	REINFORCED CONCRETE PIPE
RH	REFRIGERANT HOT GAS
RL	REFRIGERANT LIQUID
RS	REFRIGERANT SUCTION
RWSP	RAW WATER SAMPLE LINE
SP	SAMPLING LINE
SS	SANITARY SEWER
V	SANITARY DRAINAGE VENT PIPING

HVAC ABBREVIATIONS

24x12	RECTANGULAR DUCT DIMENSION
ı12	ROUND DUCT DIMENSION
AC	AIR COMPRESSOR
ACC	AIR COOLED CONDENSING UNIT
AD	ACCESS DOOR
AD	AIR DRYER
AHU	AIR HANDLING UNIT
BD-#	BACKDRAFT DAMPER - (SPEC TYPE)
BOD	BOTTOM OF DUCT
BP	BACKFLOW PREVENTER
CD-#	CONTROL DAMPER - (SPEC TYPE)
CH	CABINET HEATER
CP	CIRCULATOR PUMP
CSA	COLD SUPPLY AIR
CU	CONDENSING UNIT
DD	DUAL DUCT
DDC	DIRECT DIGITAL CONTROLS
EA	EXHAUST AIR
EBPS	EMERGENCY BACKUP PUMP STATION
EC	ELECTRIC CONVECTOR
EF	EXHAUST FAN
EG	EXHAUST GRILLE
EHC	ELECTRIC HEATING COIL
ER	EXHAUST REGISTER
ET	EXPANSION TANK
EUH	ELECTRIC UNIT HEATER
F	FAN
FD-#	FIRE DAMPER - (SPEC TYPE)
FR	FINNED TUBE RADIATION
FRP	FIBERGLASS REINFORCED PLASTIC
GUH	GAS UNIT HEATER
GWH	GAS WATER HEATER
HV	HEATING AND VENTILATION UNIT
HVAC	HEATING, VENTILATION AND AIR CONDITIONING
L	LOUVER
MA	MIXED AIR
MAU	MAKE-UP AIR UNIT
MD	MANUAL DAMPER
MV	MIXING VALVE
MZ	MULTIZONE
NC	NORMALLY CLOSED
NO	NORMALLY OPEN
OA	OUTSIDE AIR
OB	OPPOSED BLADE
OCS	ODOR CONTROL SYSTEM
OWS	OIL WATER SEPARATOR
P	PUMP
PAC	PACKAGED AIR CONDITIONER
PB	PARALLEL BLADE
PS	PUMP STATION
RA	RETURN AIR
RG	RETURN AIR GRILLE
RH	REHEAT
RTU	PACKAGED ROOFTOP AIR HANDLING UNIT
RV	RELIEF VENT
SA	SUPPLY AIR
SG	SUPPLY AIR GRILLE
SMD	SMOKE DAMPER
SP	SUMP PUMP
T-#	THERMOSTAT - (SPEC TYPE)
TA	TRANSFER AIR
TOD	TOP OF DUCT
UH	UNIT HEATER
VAV-#	VARIABLE AIR VOLUME - (TERMINAL UNIT SPEC TYPE)
WSA	WARM AIR SUPPLY

INSTRUMENTS

- FLOW METERING ELEMENT
- GG - GAUGE GLASS
  LI - LEVEL INDICATOR
  LC - LEVEL CONTROLLER
  LLS - LIQUID LEVEL SWITCH
  LX - LEVEL TRANSMITTER
  FI - FLOW INDICATOR
  FC - FLOW CONTROLLER
  FS - FLOW SWITCH
  FX - FLOW TRANSMITTER
- T - THERMOMETER
  TC - THERMOCOUPLE
  TCT - TEMPERATURE CONTROLLER
  TS - TEMPERATURE SWITCH
  TX - TEMPERATURE TRANSMITTER
  RTD - RESISTANCE TEMPERATURE DETECTOR
- P - PRESSURE GAUGE
  PC - PRESSURE CONTROLLER
  PS - PRESSURE SWITCH
  PX - PRESSURE TRANSMITTER
- P - DIFFERENTIAL PRESSURE GAUGE
  PC - DIFFERENTIAL PRESSURE CONTROLLER
  PS - DIFFERENTIAL PRESSURE SWITCH
  PX - DIFFERENTIAL PRESSURE TRANSMITTER
- TC - TEST CONNECTION
  PT - PRESSURE TAP
- (S) SAMPLE CONNECTION
- CONTROL FUNCTION LINE

AIR DISTRIBUTION DEVICE IDENTIFICATION

(2) 50-60x6 — QUANTITY / CFM / SIZE
SA-A — APPLICATION / SA = SUPPLY / RA = RETURN

PLUMBING RISER IDENTIFICATION

P1 / M3
RISER NUMBER:
P = SANITARY WASTE
W = WATER
DRAWING NUMBER WHERE RISER IS DETAILED

NOTE:

THIS IS A STANDARD MECHANICAL LEGEND AND NOT ALL ITEMS OR EQUIPMENT AS DESIGNATED HEREON ARE USED ON THIS PROJECT.

PLUMBING

- SH SHOWER
- WF CIRCULAR WASH FOUNTAIN
- WF SEMI-CIRCULAR WASH FOUNTAIN
- MB MOP BASIN
- SS SERVICE SINK
- EWC ELECTRIC WATER COOLER
- WH WATER HEATER
- WC WATER CLOSET (FLUSH VALVE TYPE)
- WC WATER CLOSET (TANK TYPE)
- U URINAL
- LAV/SK LAVATORY OR SINK
- ES/EW EMERGENCY SHOWER AND EYEWASH
- 4"FD-A FLOOR DRAIN - SIZE - SPEC TYPE
- 4"ED-A EQUIPMENT DRAIN - SIZE - SPEC TYPE
- 4"RD-A ROOF DRAIN - SIZE - SPEC TYPE
- WHA WATER HAMMER ARRESTOR
- PT PRESSURE/TEMPERATURE RELIEF VALVE
- COLD WATER (CW)
- HOT WATER (HW)
- HOT WATER RECIRCULATING (HWR)
- SOIL OR WASTE (ABOVE GRADE)
- SOIL OR WASTE (BELOW GRADE)
- V VENT
- VTR VENT THROUGH ROOF
- RD ROOF DRAIN (ABOVE GRADE)
- RD ROOF DRAIN (BELOW GRADE)

BURNS McDONNELL
3650 MANSELL ROAD, SUITE 300
ALPHARETTA, GA 30022
770-587-4776
1234567890

CITICO PUMP RELIABILITY IMPROVEMENTS
CITY OF CHATTANOOGA, TN
CONSENT DECREE PROGRAM

REV	DATE	REVISION DESCRIPTION
0	05/15/17	ISSUED FOR CONSTRUCTION

THIS LINE ____ IS ONE INCH LONG WHEN PLOTTED FULL SCALE

THIS DRAWING MUST BE USED IN CONJUNCTION WITH THE APPLICABLE OR GOVERNING TECHNICAL SPECIFICATIONS AND OTHER CONTRACT DOCUMENTS.

PROJECT NO: 95307
DATE: 04/14/17

DISC. LEAD:	DESIGNER:	CHECKER:
JKP	JLB/BJH	JKP

SHEET TITLE
MECHANICAL

LEGEND, ABBREVIATIONS AND GENERAL NOTES

SHEET M001 REV 0

BRYCE JOSEPH DICKMEYER — REGISTERED ENGINEER — AGRICULTURE — No. 116241 — STATE OF TENNESSEE — 5/16/17

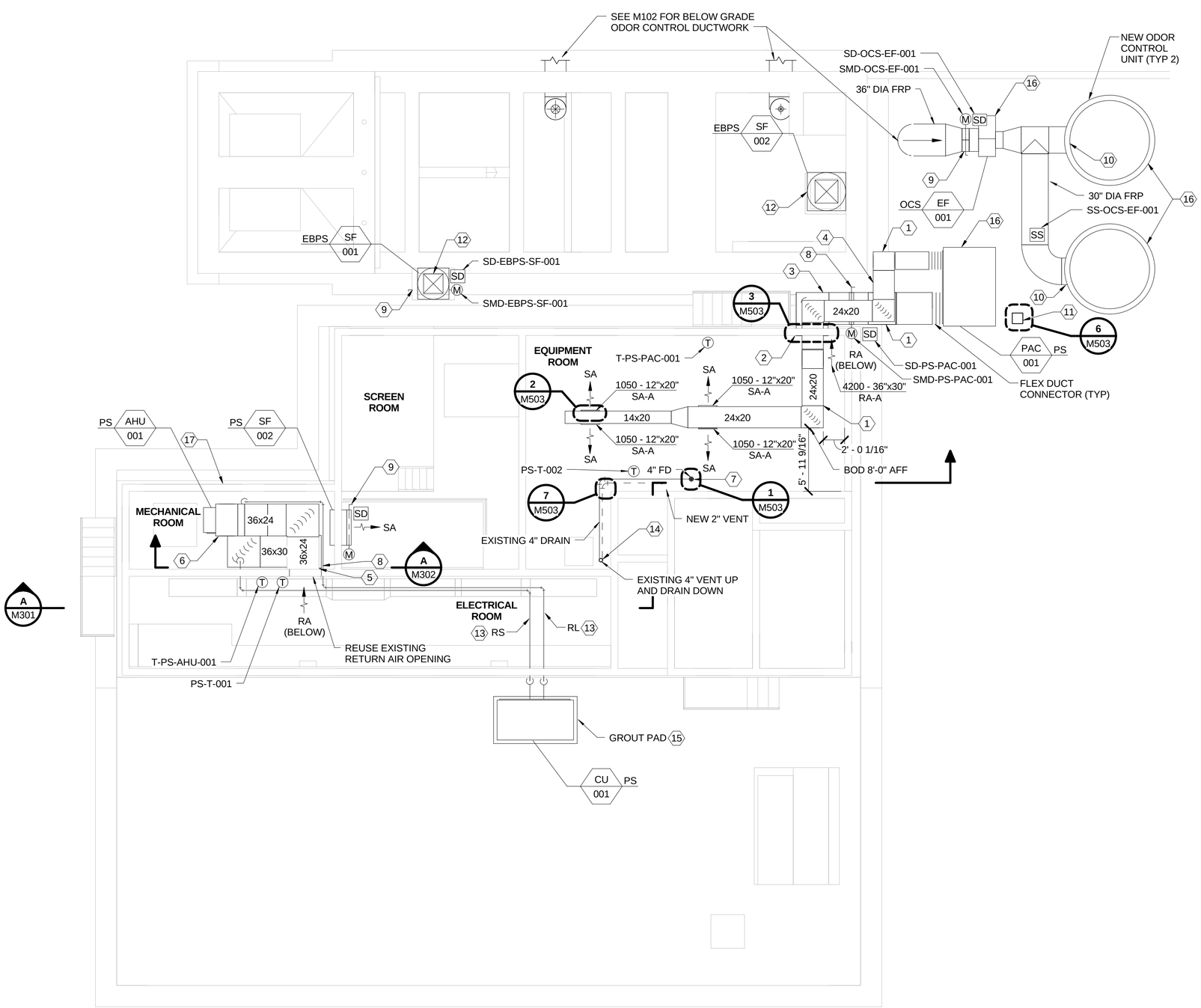

HVAC PLAN ELEVATION 665' - 0"

0 4' 8' 12'
SCALE IN FEET

NORTH

KEYED NOTES:

1. ALUMINUM DUCTWORK. SUPPORT EXTERIOR DUCTWORK PER GROUND DUCTWORK SUPPORT DETAIL 4 DWG M503. SUPPORT INTERIOR DUCTWORK PER EQUIPMENT ROOM SUPPORT NOTE 3 DWG S002.
2. 36"x30" RETURN AIR OPENING IN WALL. SEE DRAWING S504 FOR NEW OPENING IN EXISTING MASONRY WALL DETAIL.
3. 36"x30" RETURN AIR DUCT.
4. 24"x20" SUPPLY AIR DUCT.
5. CONTRACTOR SHALL PROVIDE NEW ALUMINUM DUCTWORK AND TRANSITION TO ACCOMODATE EXISTING RETURN AIR OPENING.
6. CONTRACTOR SHALL PROVIDE NEW ALUMINUM DUCTWORK AND TRANSITION TO CONNECT TO EXISTING SUPPLY AIR DUCTWORK.
7. CONTRACTOR SHALL INSTALL NEW 4" FD WITH TRAP PRIMER. CONNECT TO ADJACENT 4" CW LINE DOWNSTREAM OF BACKFLOW PREVENTER.
8. CONTRACTOR SHALL INSTALL SMOKE DAMPER WITH INTEGRAL SMOKE DETECTOR IN RETURN AIR DUCTWORK.
9. CONTRACTOR SHALL INSTALL SMOKE DAMPER WITH INTEGRAL SMOKE DETECTOR ON SUPPLY FAN DISCHARGE.
10. CONTRACTOR SHALL CONNECT 30" DIA FRP DUCT TO ODOR CONTROL SYSTEM INLET PER MANUFACTURER'S INSTRUCTIONS.
11. 1'x1'x1' SUMP WITH GRAVEL. FIELD ROUTE CONDENSATE DRAIN LINE TO SUMP. SEE STRUCTURAL DETAILS FOR OPENING REINFORCEMENT REQUIREMENTS.
12. SEE PROPELLER SUPPLY FAN DETAIL 5 DRAWING M503.
13. ROUTE NEW REFRIGERANT LINES ALONG EXISTING REFRIGERANT LINE SUPPORTS.
14. TIE NEW 2" VENT INTO EXISTING 4" VENT UP.
15. NEW TWO INCH GROUT PAD TO EXTEND MIN. 4" BEYOND EDGE OF CU PER SIMILAR PADS ON STRUCTURAL DRAWINGS. FASTEN CU PER MANUFACTURER'S RECOMMENDATIONS THROUGH GROUT PAD AND INTO CONCRETE BELOW.
16. TWO INCH GROUT PAD TO EXTEND MIN 4" BEYOND EDGE OF EQUIPMENT AS INDICATED ON S107. FASTEN EQUIPMENT PER MANUFACTURER'S RECOMMENDATIONS THROUGH GROUT PAD AND INTO CONCRETE BELOW.
17. EXISTING LOUVER TO REMAIN.

BRYCE JOSEPH DICKMEYER REGISTERED ENGINEER AGRICULTURE COMMERCE No. 116341 STATE OF TENNESSEE 5/16/17

BURNS McDONNELL
3650 MANSELL ROAD, SUITE 300
ALPHARETTA, GA 30022
770-587-4776
1234567890

CITICO PUMP RELIABILITY IMPROVEMENTS
CITY OF CHATTANOOGA, TN
CONSENT DECREE PROGRAM

CHATTANOOGA · TENNESSEE SEAL

REV	DATE	REVISION DESCRIPTION
0	05/15/17	ISSUED FOR CONSTRUCTION

THIS LINE IS ONE INCH LONG WHEN PLOTTED FULL SCALE

THIS DRAWING MUST BE USED IN CONJUNCTION WITH THE APPLICABLE OR GOVERNING TECHNICAL SPECIFICATIONS AND OTHER CONTRACT DOCUMENTS.

PROJECT NO: 95307
DATE: 04/14/17

DISC. LEAD:	DESIGNER:	CHECKER:
JKP	JLB/BJH	JKP

SHEET TITLE
MECHANICAL

PLAN ELEVATION
665' - 0"

SHEET **M101** REV **0**

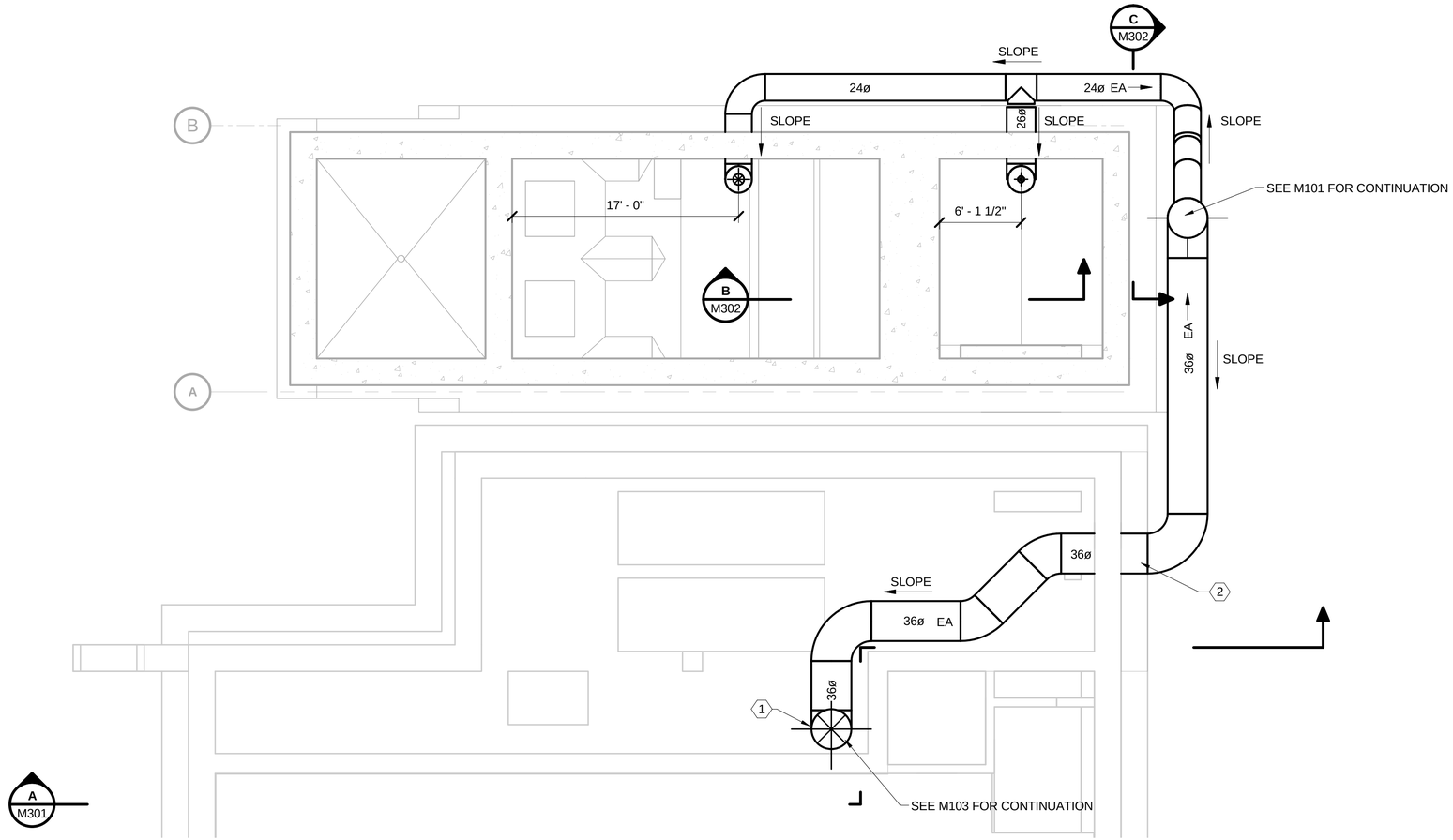

ODOR CONTROL DUCT PLAN
ELEVATION 640' - 0"

0 4' 8' 12'
SCALE IN FEET

NORTH

GENERAL NOTES:

1. ALL ODOR CONTROL DUCTWORK SHALL BE SLOPED BACK TO EACH RESPECTIVE WET WELL AS INDICATED AT 1%.
2. ALL DUCTWORK SERVING THE ODOR CONTROL SYSTEM SHALL BE FRP.
3. SEE CIVIL DRAWING C503 FOR FRP DUCTWORK TRENCHING.

KEYED NOTES:

1. TAP INTO EXISTING 30" FRP DUCT.
2. SEE DRAWING S307 FOR EXISTING WALL PENETRATION COLLAR REQUIREMENTS.

BURNS McDONNELL
3650 MANSELL ROAD, SUITE 300
ALPHARETTA, GA 30022
770-587-4776
1234567890

CITICO PUMP RELIABILITY IMPROVEMENTS

CITY OF CHATTANOOGA, TN
CONSENT DECREE PROGRAM

REV	DATE	REVISION DESCRIPTION
0	05/15/17	ISSUED FOR CONSTRUCTION

THIS LINE IS ONE INCH LONG WHEN PLOTTED FULL SCALE

THIS DRAWING MUST BE USED IN CONJUNCTION WITH THE APPLICABLE OR GOVERNING TECHNICAL SPECIFICATIONS AND OTHER CONTRACT DOCUMENTS.

PROJECT NO: 95307

DATE: 04/14/17

DISC. LEAD:	DESIGNER:	CHECKER:
JKP	JLB/BJH	JKP

SHEET TITLE
MECHANICAL

PLAN ELEVATION
640' - 0"

BRYCE JOSEPH DICKMEYER
REGISTERED ENGINEER
XV
AGRICULTURE
5/16/17
No. 116241
STATE OF TENNESSEE

SHEET **M102** REV **0**

KEYED NOTES:

1. INLET 12" BELOW CEILING.
2. GRIND OFF EXTERIOR FINISH A MINIMUM OF 12" FROM EDGE OF NEW CONNECTION. CLEAN AREA AND ALLOW TO FULLY DRY PRIOR TO MAKING CONNECTION. CONNECT NEW FRP DUCT WITH WET LAY UP JOINT.
3. EDGE OF CONCRETE PAD TO EQUIPMENT.
4. REUSE EXISTING OPENING.

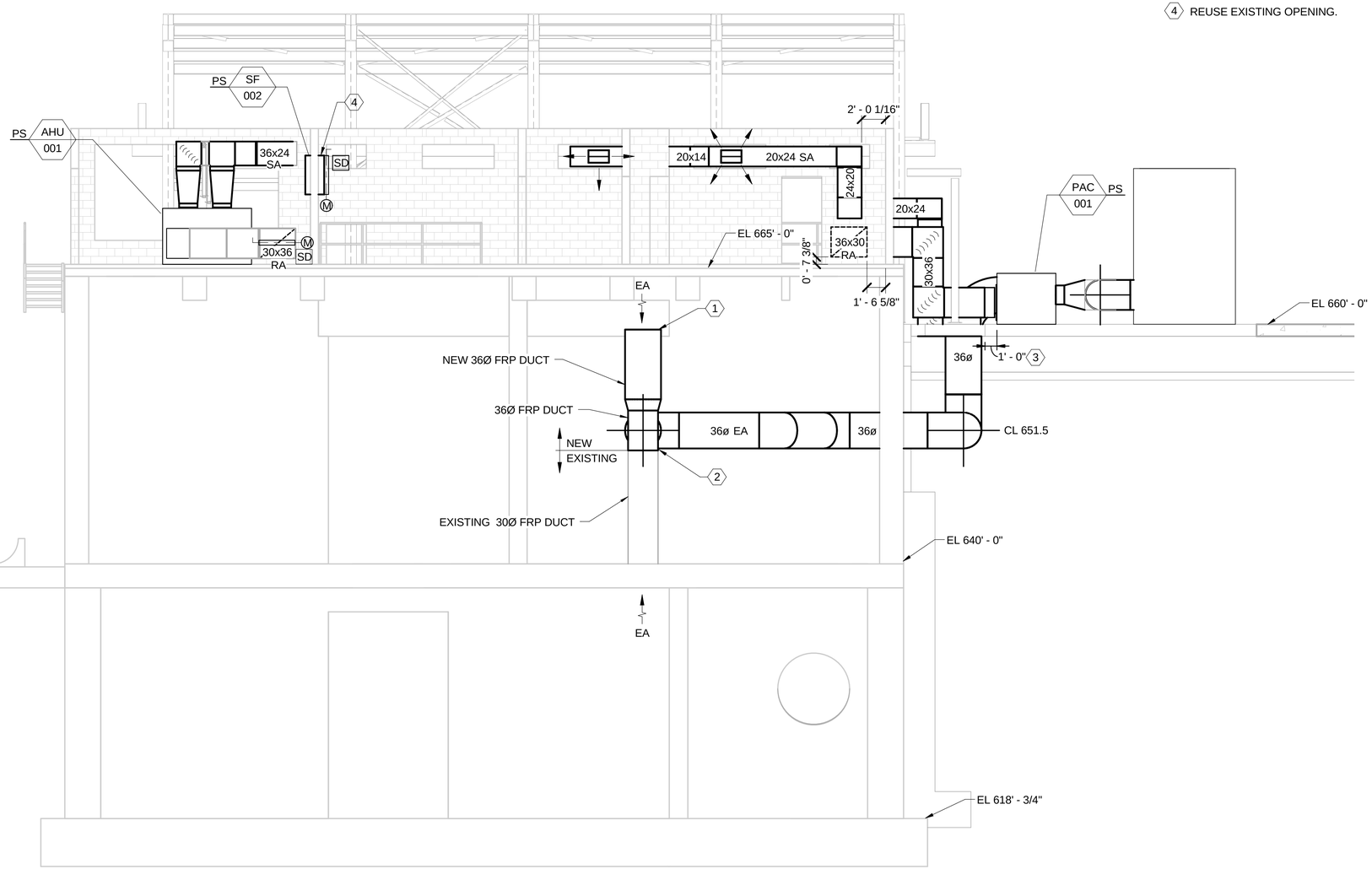

SECTION A M101 M102

PUMP STATION

0 4' 8' 12'

SCALE IN FEET

BURNS McDONNELL
3650 MANSELL ROAD, SUITE 300
ALPHARETTA, GA 30022
770-587-4776
1234567890

CITICO PUMP RELIABILITY IMPROVEMENTS

CITY OF CHATTANOOGA, TN
CONSENT DECREE PROGRAM

REV	DATE	REVISION DESCRIPTION
0	05/15/17	ISSUED FOR CONSTRUCTION

THIS LINE IS ONE INCH LONG WHEN PLOTTED FULL SCALE

THIS DRAWING MUST BE USED IN CONJUNCTION WITH THE APPLICABLE OR GOVERNING TECHNICAL SPECIFICATIONS AND OTHER CONTRACT DOCUMENTS.

PROJECT NO: 95307

DATE: 04/14/17

DISC. LEAD:	DESIGNER:	CHECKER:
JKP	JLB/BJH	JKP

SHEET TITLE
MECHANICAL

MECHANICAL SECTIONS 1

BRYCE JOSEPH DICKMEYER
REGISTERED ENGINEER
AGRICULTURE
5/16/17
No. 116241
STATE OF TENNESSEE

SHEET **M301** REV **0**

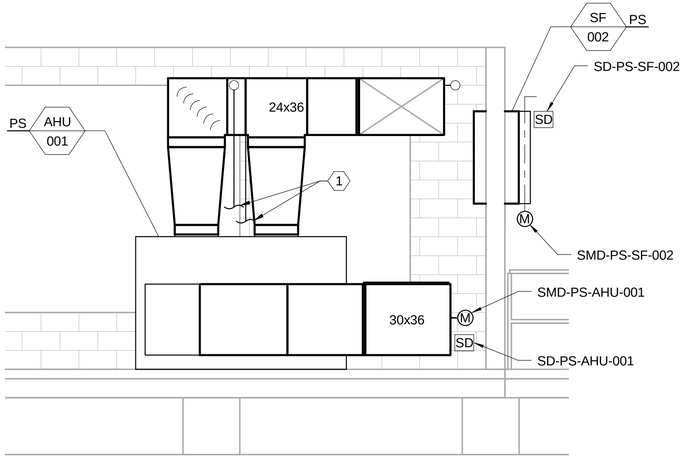

ELEVATION A M101

AHU VIEW

0 2' 4' 6'

SCALE IN FEET

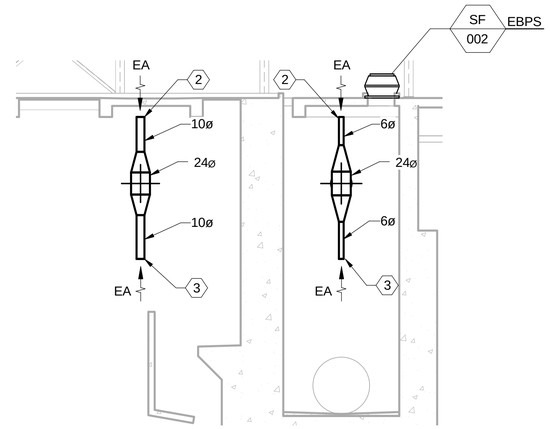

SECTION B M102

ODOR CONTROL DUCT NEW EBPS

0 4' 8' 16'

SCALE IN FEET

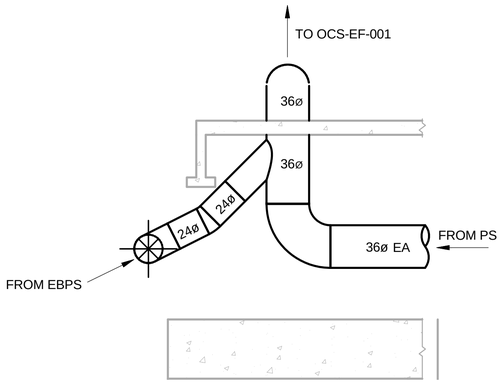

SECTION C M102

DUCT ELEVATION

0 4' 8' 12'

SCALE IN FEET

KEYED NOTES:

1. CONTRACTOR SHALL FIELD ROUTE RL AND RS TO AHU CONNECTIONS AND CONNECT PER MANUFACTURER'S RECOMMENDATION.
2. EXHAUST AIR INLET SHALL BE 1'-0" BELOW CONCRETE SLAB. COVER INLET OPENING WITH BIRD SCREEN.
3. EXHAUST AIR INLET ELEVATION 643'-0". COVER INLET OPENING WITH BIRD SCREEN.

BURNS McDONNELL
3650 MANSELL ROAD, SUITE 300
ALPHARETTA, GA 30022
770-587-4776
1234567890

CITICO PUMP RELIABILITY IMPROVEMENTS

CITY OF CHATTANOOGA, TN
CONSENT DECREE PROGRAM

REV	DATE	REVISION DESCRIPTION
0	05/15/17	ISSUED FOR CONSTRUCTION

THIS LINE IS ONE INCH LONG WHEN PLOTTED FULL SCALE

THIS DRAWING MUST BE USED IN CONJUNCTION WITH THE APPLICABLE OR GOVERNING TECHNICAL SPECIFICATIONS AND OTHER CONTRACT DOCUMENTS.

PROJECT NO: 95307

DATE: 04/14/17

DISC. LEAD:	DESIGNER:	CHECKER:
JKP	JLB/BJH	JKP

SHEET TITLE
MECHANICAL

MECHANICAL
SECTIONS 2

SHEET **M302** REV **0**

CONDENSING UNIT (CU) SCHEDULE

EQUIP. NUMBER	LOCATION		B.O.D. MFR	B.O.D. MODEL	GROSS COOLING LOAD (MBH)		MINIMUM CIRCUIT AMPACITY (MCA)	ELEC. DATA (V/PH/HZ)	WT (LBS)	REMARKS
	DWG	ROOM SERVED			SENSIBLE	TOTAL				
PS-CU-001	M101	ELECTRICAL ROOM	CARRIER	38AUZ	176	178	29.9	460/60/3	731	1,2

REMARKS:

1. PROVIDE PHENOLIC EPOXY CORROSION PROTECTION COATING ON COOLING COILS.
2. LOW AMBIENT KIT.

GRILL AND DIFUSER SCHEDULE

TYPE	LOCATION		B.O.D.	B.O.D.	FACE	FACE	MOUNT	PATTERN	BLADE	DAMPER	MAX	MAX	MATERIAL	FINISH
	DWG	ROOM SERVED	MFR	MODEL	TYPE	SIZE			SPACING		NC	PRESS. DROP ("W.G.")		
SA-A	M101	EQUIPMENT ROOM	TITUS	355ZFL	LB	12x20	DUCT	FX-30	3/4"	-	30	0.1	AL	W-E
RA-A	M101	EQUIPMENT ROOM	TITUS	350FL	-	36x30	WALL	-	3/4"	-	30	-	AL	W-E

LEGEND:
FACE TYPE:
LB = BLADES PARALLEL TO LONG DIMENSION

MATERIAL:
AL = ALUMINUM FINISHES
W-E = WHITE ENAMEL

PATTERNS:
FX-YY = DEG. DEFLECTION

FAN SCHEDULE

EQUIP. NUMBER	LOCATION		B.O.D.	B.O.D.	FAN TYPE	FAN MOUNTING	CFM @ STD. COND.	ESP (IN W.C.)	MOTOR TYPE	APPROX. HP	VOLTS/PHASE/HZ	DRIVE TYPE	WT (LBS)	REMARKS
	DWG	ROOM SERVED	MFR	MODEL										
EBPS-SF-001	M101	EBPS	GREENHECK	RBS-2H24-10	HOODED PROPELLER	GRADE	3500	0.5	EXP	1	460/60/3	BELT	210	-
EBPS-SF-002	M101	EBPS	GREENHECK	RBS-1H24-7	HOODED PROPELLER	GRADE	1350	0.5	EXP	0.75	460/60/3	BELT	214	-
PS-SF-002	M101	SCREEN ROOM	GREENHECK	SBCE-3H36-30	SIDEWALL PROPELLER	SIDEWALL	10,100	0.5	EXP	3	460/60/3	BELT	375	-
OCS-EF-001	M101	EBPS AND WET WELL/SCREEN ROOM	HARTZELL	A41-0-36-3FA	CENTRIFUGAL	FLOOR	16,000	12	EXP	75	460/60/3	BELT	3000	-

AIR HANDLING UNIT (AHU) SCHEDULE

EQUIP. NUMBER	LOCATION		B.O.D. MFR	B.O.D. MODEL	TOTAL FLOW (CFM)	OA (CFM)	ESP (IN W.C.)	APPROX MOTOR BHP	GROSS COOLING LOAD (MBH)		HEATING		HEAT	FILTER DEPTH	FILTER EFF	MINIMUM CIRCUIT AMPACITY (MCA)	ELEC. DATA (V/PH/HZ)	MIN EFF (IEER)	UNIT ORIENT.	WT (LBS)	REMARKS
	DWG	ROOM SERVED							SENSIBLE	TOTAL	ENTERING AIR TEMP DB (°F)	MINIMUM HEATING OUTPUT KW									
PS-AHU-001	M101	ELECTRICAL ROOM	CARRIER	40RUA	6000	100	2	3.7	176	178	76.8	12	ELECTRIC	2"	MERV-8	51.1	460/60/3	13.2	VERTICAL	713	1,2

REMARKS:

1. MANUFACTURER-PROVIDED REMOTE THERMOSTAT.
2. UNIT TO PROVIDE CONTINUOUS OUTSIDE AIR VENTILATION AT A MINIMUM OF 100 CFM TO BE IN COMPLIANCE WITH ASHRAE 62.1.

GRADE-MOUNTED PACKAGED AIR CONDITIONING (PAC) UNIT SCHEDULE

EQUIP. NUMBER	LOCATION		B.O.D. MFR	B.O.D. MODEL	TOTAL FLOW (CFM)	OA (CFM)	ESP (IN W.C.)	APPROX MOTOR BHP	GROSS COOLING CLG LOAD (MBH)		HEATING		HEAT	FILTER DEPTH	FILTER EFF	MINIMUM CIRCUIT AMPACITY (MCA)	ELEC. DATA (V/PH/HZ)	MIN EFF (IEER)	UNIT ORIENT.	WT (LBS)	REMARKS
	DWG	ROOM SERVED							SENSIBLE	TOTAL	ENTERING AIR TEMP DB (°F)	MINIMUM HEATING OUTPUT KW									
PS-PAC-001	M101	EQUIPMENT ROOM	CARRIER	50HCAD12	4200	100	2	5	92.5	94	76.8	7	ELECTRIC	2"	MERV-8	39.2	460/60/3	12.2	HORIZONTAL	1189	1,2,3,4

REMARKS:

1. MANUFACTURER-PROVIDED REMOTE THERMOSTAT.
2. LOW AMBIENT KIT.
3. UNIT TO PROVIDE CONTINUOUS OUTSIDE AIR VENTILATION AT A MINIMUM OF 100 CFM TO BE IN COMPLIANCE WITH ASHRAE 62.1.
4. PROVIDE PHENOLIC EPOXY CORROSION PROTECTION COATING ON COOLING COILS.

BRYCE JOSEPH DICKMEYER
REGISTERED ENGINEER
AGRICULTURE
5/16/17
STATE OF TENNESSEE

BURNS McDONNELL
3650 MANSELL ROAD, SUITE 300
ALPHARETTA, GA 30022
770-587-4776
1234567890

CITICO PUMP RELIABILITY IMPROVEMENTS
CITY OF CHATTANOOGA, TN
CONSENT DECREE PROGRAM

REV	DATE	REVISION DESCRIPTION
0	05/15/17	ISSUED FOR CONSTRUCTION

THIS LINE IS ONE INCH LONG WHEN PLOTTED FULL SCALE

THIS DRAWING MUST BE USED IN CONJUNCTION WITH THE APPLICABLE OR GOVERNING TECHNICAL SPECIFICATIONS AND OTHER CONTRACT DOCUMENTS.

PROJECT NO: 95307
DATE: 04/14/17

DISC. LEAD:	DESIGNER:	CHECKER:
JKP	JLB/BJH	JKP

SHEET TITLE
MECHANICAL

SCHEDULES

SHEET M501 REV 0

SEQUENCE OF OPERATIONS

1. AIR CONDITIONING SYSTEMS

1.1. SPLIT SYSTEM AIR CONDITIONING SYSTEMS

SPLIT SYSTEM AIR CONDITIONING SYSTEMS SHALL BE CONTROLLED BY THEIR RESPECTIVE SPACE THERMOSTATS AS INDICATED BELOW. THE THERMOSTAT SHALL HAVE AN "ON-OFF" SYSTEM SWITCH. WHEN IN THE "ON" POSITION, THE AIR HANDLING UNIT FAN SHALL OPERATE CONTINUOUSLY TO PROVIDE THE MINIMUM OUTDOOR AIR AS DESCRIBED IN THE SCHEDULE. BEFORE THE AIR HANDLING UNIT FAN IS ENERGIZED IN ANY MODE OF OPERATION, THE OUTSIDE AIR CONTROL DAMPERS SHALL BE PROVEN OPEN. WHEN THE FAN IS DE-ENERGIZED, THE CONTROL DAMPERS SHALL CLOSE.

EQUIPMENT	THERMOSTAT	CONTROL DAMPERS	CONDENSER
PS-AHU-001	T- PS-AHU-001	UNIT-SUPPLIED	PS-CU-001

1.1.1. SYSTEM COOLING MODE. WHEN COOLING IS REQUIRED AS DETERMINED BY THE THERMOSTAT, THE FAN AND THE RESPECTIVE CONDENSER COMPRESSOR SHALL BE ENERGIZED AND SHALL CYCLE TO MAINTAIN THE SUMMER SPACE TEMPERATURE SETPOINT OF 80 °F (ADJ.). WHEN THE THERMOSTAT IS SATISFIED, THE COMPRESSOR SHALL BE DE-ENERGIZED.

1.1.2. SYSTEM HEATING MODE. WHEN HEATING IS REQUIRED AS DETERMINED BY THE THERMOSTAT, THE SYSTEM ELECTRIC HEATING COIL SHALL BE ENERGIZED TO MAINTAIN THE WINTER SPACE TEMPERATURE SETPOINT OF 60 °F (ADJ.). WHEN THE THERMOSTAT IS SATISFIED, THE ELECTRIC HEATING COIL SHALL BE DE-ENERGIZED.

1.2. PACKAGED AIR CONDITIONING SYSTEMS

PACKAGED AIR CONDITIONING SYSTEMS SHALL BE CONTROLLED BY THEIR RESPECTIVE SPACE THERMOSTATS AS INDICATED BELOW. THE THERMOSTAT SHALL HAVE AN "ON-OFF" SYSTEM SWITCH. WHEN IN THE "ON" POSITION, THE SYSTEM FAN SHALL RUN CONTINUOUSLY TO PROVIDE THE MINIMUM OUTDOOR AIR AS DESCRIBED IN THE SCHEDULE. BEFORE THE SYSTEM FAN IS ENERGIZED IN ANY MODE OF OPERATION, THE OUTSIDE AIR CONTROL DAMPERS SHALL BE PROVEN OPEN. WHEN THE FAN IS DE-ENERGIZED, THE CONTROL DAMPERS SHALL CLOSE.

EQUIPMENT	THERMOSTAT	CONTROL DAMPERS	SMOKE DAMPER
PS-PAC-001	T-PS-PAC-001	UNIT-SUPPLIED	SMD-PS-PAC-001

1.2.1. SYSTEM COOLING MODE.
1.2.2. WHEN COOLING IS REQUIRED AS DETERMINED BY THE THERMOSTAT, THE RESPECTIVE CONDENSER COMPRESSOR SHALL BE ENERGIZED AND SHALL CYCLE TO MAINTAIN THE SUMMER SPACE TEMPERATURE SETPOINT OF 80 °F (ADJ.). FOR TWO STAGE UNITS, THE SECOND STAGE OF COOLING SHALL BE ENERGIZED IF THE SPACE TEMPERATURE RISES A FIXED AMOUNT ABOVE THE PREVIOUS STAGE COOLING SET POINT. WHEN THE THERMOSTAT IS SATISFIED, THE COMPRESSOR SHALL BE DE-ENERGIZED.

1.2.3. SYSTEM HEATING MODE. WHEN HEATING IS REQUIRED AS DETERMINED BY THE THERMOSTAT, THE SYSTEM ELECTRIC HEATING COIL SHALL BE ENERGIZED TO MAINTAIN THE WINTER SPACE TEMPERATURE SETPOINT OF 60 °F (ADJ.). WHEN THE THERMOSTAT IS SATISFIED, THE ELECTRIC HEATING COIL SHALL BE DE-ENERGIZED.

1.3. HVAC SYSTEM ALARMS.

REFER TO THE ELECTRICAL DRAWINGS FOR CONTROL AND WIRING DIAGRAMS ASSOCAITED WITH THE SEQUENCE BELOW.

1.3.1. SMOKE DETECTORS.

SMOKE DETECTORS SHALL BE LOCATED IN THE DUCTWORK OF THE EQUIPMENT LISTED BELOW. IN THE EVENT THAT SMOKE IS DETECTED BY ANY OF THE DETECTORS, A SIGNAL SHALL BE SENT TO THE HVAC SYSTEMS CONTROL PANEL, A VENTILATION FAILURE LIGHT SHALL BE ILLUMINATED ON THE HVAC SYSTEMS CONTROL PANEL, THE INDICATED EQUIPMENT SHALL BE DE-ENERGIZED, ANY SMOKE DAMPERS ASSOCIATED WITH THE EQUIPMENT SHALL CLOSE, A SIGNAL SHALL BE SENT TO THE PLC, AND A GENERAL HVAC SYSTEM FAILURE ALARM SHALL BE SENT TO THE SCADA SYSTEM.

EQUIPMENT	SMOKE DETECTOR	SMOKE DAMPER
PS-PAC-001	SD-PS-PAC-001	SMD-PS-PAC-001
PS-AHU-001	SD-PS-AHU-001	SMD-PS-AHU-001

1.3.2. HIGH TEMPERATURE ALARM.

A HIGH TEMPERATURE THERMOSTAT SHALL BE PROVIDED IN THE ROOMS INDICATED ON THE DRAWINGS. WHEN THE SPACE TEMPERATURE RISES A CERTAIN AMOUNT ABOVE THE THERMOSTAT SETPOINT, AN ALARM SIGNAL SHALL BE SENT TO THE PLC AND A GENERAL HVAC SYSTEM FAILURE ALARM SHALL BE SENT TO THE SCADA SYSTEM.

THERMOSTAT
PS-T-001
PS-T-002

2. ODOR CONTROL SYSTEM

2.1. SUPPLY FANS
2.1.1. EQUIPMENT INDICATED BELOW SHALL BE CONTROLLED BY AN "HAND-OFF-AUTO" SELECTOR SWITCH LOCATED AT THE LOCAL SUPPLY FAN STARTER. WHEN THE SWITCH IS PLACED IN THE "HAND" POSITION, THE FAN SHALL BE ENERGIZED. WHEN THE SWITCH IS PLACED IN THE "AUTO" POSITION, THE FAN SHALL BE CONTROLLED BY THE INTERLOCK.

EQUIPMENT	SMOKE DAMPER	INTERLOCK
EBPS-SF-001	SMD-PS-SF-001	OCS-EF-001
EBPS-SF-002	N/A	OCS-EF-001
PS-SF-002	SMD-PS-SF-002	OCS-EF-001

2.1.2. ODOR CONTROL SYSTEM EXHAUST FAN
EQUIPMENT INDICATED BELOW SHALL BE CONTROLLED BY A "START-STOP" SELECTOR SWITCH LOCATED ON THE FACE OF THE ODOR CONTROL SYSTEM EXHUAST FAN STARTER. WHEN THE SWITCH IS PLACED IN THE "START" POSITION, THE EXHAUST FAN AND ANY INTERLOCKED EQUIPMENT SHALL BE ENERGIZED.

EQUIPMENT	INTERLOCK
OCS-EF-001	EBPS-SF-001, EBPS-SF-002, PS-SF-002

2.2. ODOR CONTROL SYSTEM ALARMS

REFER TO THE ELECTRICAL DRAWINGS FOR CONTROL AND WIRING DIAGRAMS ASSOCIATED WITH THE SEQUENCE BELOW.

2.2.1. SMOKE DETECTORS.
SMOKE DETECTORS SHALL BE LOCATED IN THE DUCTWORK OR ON THE DISCHARGE OF THE EQUIPMENT LISTED BELOW. IN THE EVENT THAT SMOKE IS DETECTED BY ANY OF THE DETECTORS, A SIGNAL SHALL BE SENT TO THE ODOR CONTROL SYSTEM EXHAUST FAN STARTER, A GENERAL ODOR CONTROL SYSTEM VENTILATION FAILURE ALARM LIGHT SHALL BE ILLUMINATED ON THE STARTER, THE INDICATED EQUIPMENT AND ANY INTERLOCKED EQUIPMENT SHALL BE DE-ENERGIZED, ANY SMOKE DAMPERS ASSOCIATED WITH THE EQUIPMENT SHALL CLOSE, A SIGNAL SHALL BE SENT TO THE PLC, AND A GENERAL ODOR CONTROL SYSTEM VENTILATION FAILURE ALARM SHALL BE SENT TO THE SCADA SYSTEM. REFER TO THE ELECTRICAL DRAWINGS FOR WIRING AND CONTROL DIAGRAMS.

EQUIPMENT	SMOKE DETECTOR	SMOKE DAMPER	INTERLOCK
PS-SF-002	SD-PS-SF-002	SMD-PS-SF-002	OCS-EF-001
EBPS-SF-001	SD-EBPS-SF-001	SMD-EBPS-SF-001	OCS-EF-001
EBPS-SF-002	SD-EBPS-SF-002		OCS-EF-001
OCS-EF-001	SD-OCS-EF-001	SMD-OCS-EF-001	EBPS-SF-001, EBPS-SF-002, PS-SF-002

2.2.2. AIRFLOW SWITCH
AN AIRFLOW SWITCH SHALL BE PROVIDED IN THE DUCTWORK FOR THE EQUIPMENT INDICATED BELOW. IN THE EVENT THAT AIRFLOW IS NOT ATTAINED OR LOST, A GENERAL ODOR CONTROL SYSTEM VENTILATION FAILURE ALARM LIGHT SHALL BE ILLUMINATED ON THE FACE OF THE ODOR CONTROL SYSTEM EXHAUST FAN STARTER, A SIGNAL SHALL BE SENT TO THE PLC AND A GENERAL ODOR CONTROL SYSTEM VENTILATION FAILURE ALARM SHALL BE SENT TO THE SCADA SYSTEM. A TIMER (ADJUSTABLE) SHALL BE PROVIDED IN THE STARTER AND SHALL BE SET TO 1 MINUTE TO ALLOW SUFFICIENT TIME FOR THE CONTROL DAMPERS TO OPEN BEFORE SENDING AN ALARM.

EQUIPMENT	AIRFLOW SWITCH
OCS-EF-001	SS-OCS-EF-1

BRYCE JOSEPH DICKMEYER
REGISTERED ENGINEER
XVI
AGRICULTURE
5/16/17
No. 116241
STATE OF TENNESSEE

BURNS McDONNELL
3650 MANSELL ROAD, SUITE 300
ALPHARETTA, GA 30022
770-587-4776
1234567890

CITICO PUMP RELIABILITY IMPROVEMENTS
CITY OF CHATTANOOGA, TN
CONSENT DECREE PROGRAM

REV	DATE	REVISION DESCRIPTION
0	05/15/17	ISSUED FOR CONSTRUCTION

THIS LINE IS ONE INCH LONG WHEN PLOTTED FULL SCALE

THIS DRAWING MUST BE USED IN CONJUNCTION WITH THE APPLICABLE OR GOVERNING TECHNICAL SPECIFICATIONS AND OTHER CONTRACT DOCUMENTS.

PROJECT NO: 95307
DATE: 04/14/17

DISC. LEAD:	DESIGNER:	CHECKER:
JKP	JLB/BJH	JKP

SHEET TITLE
MECHANICAL

HVAC SEQUENCE OF OPERATIONS

SHEET M502 REV 0

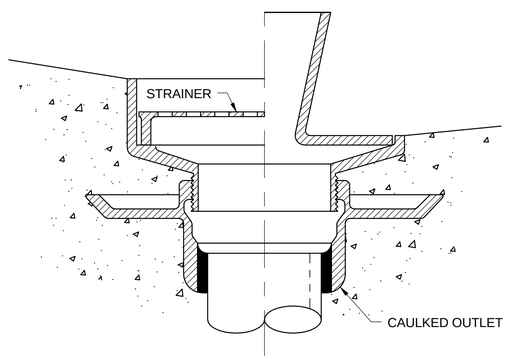

DETAIL 1 M101

FD01 - EQUIPMENT DRAIN INSTALLATION GROUND FLOOR

NOT TO SCALE

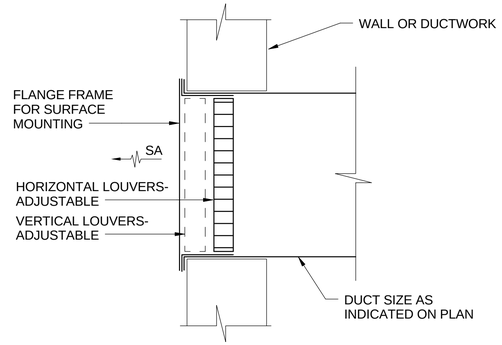

DETAIL 2 M101

DA04 - TYPE A - REGISTER

NOT TO SCALE

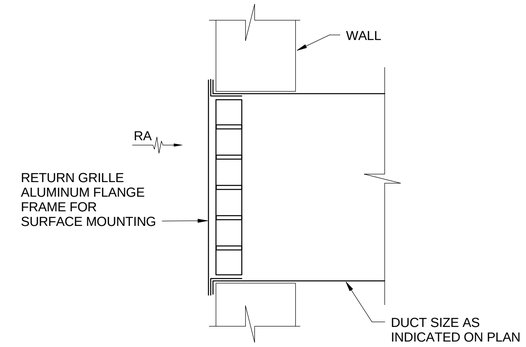

DETAIL 3 M101

DA05 - TYPE A - RETURN AIR GRILLE

NOT TO SCALE

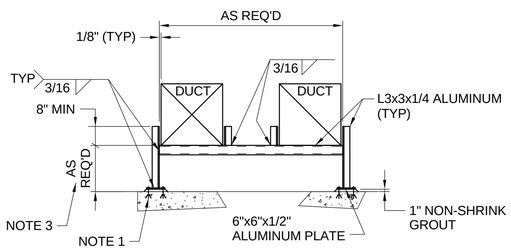

NOTES:

1. 5/8" DIAMETER TYPE 304 SST HILTI HIT HY 200 ANCHOR BOLTS OR ENGINEER APPROVED EQUAL (MIN EMBED = 5"). (TYP)
2. ALUMINUM ITEMS IN CONTACT WITH CONCRETE SHALL HAVE A BITUMINOUS COATING.
3. MINIMUM 18" ABOVE FINISHED GRADE.

DETAIL 4

GROUND DUCTWORK SUPPORT DETAIL

NOT TO SCALE

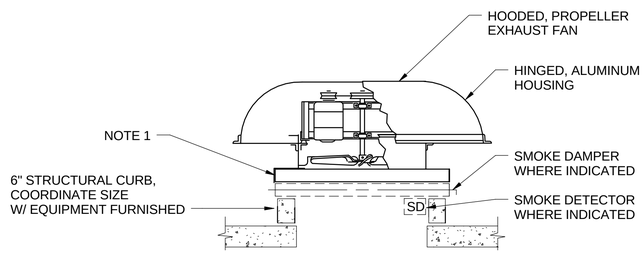

1. ALUMINUM ITEMS IN CONTACT WITH CONCRETE SHALL HAVE A BITUMINOUS COATING.

DETAIL 5

SUPPLY FAN

NOT TO SCALE

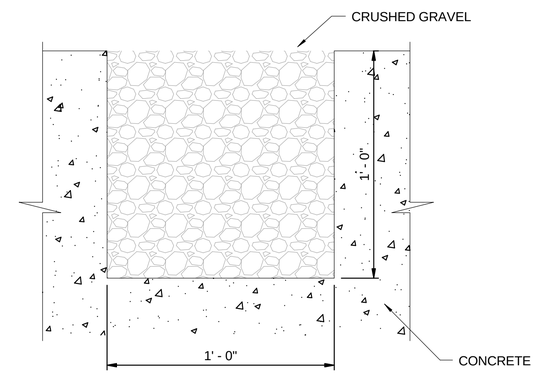

DETAIL 6 M101

CONDENSATE SUMP

NOT TO SCALE

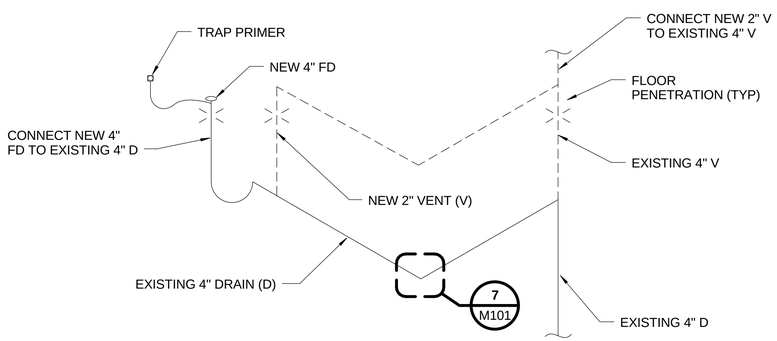

DETAIL 7 M101

PLUMBING RISER

NOT TO SCALE

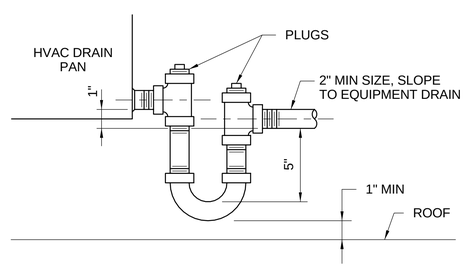

DETAIL 8

TD02 - HVAC CONDENSATE TRAP DRAIN

NOT TO SCALE

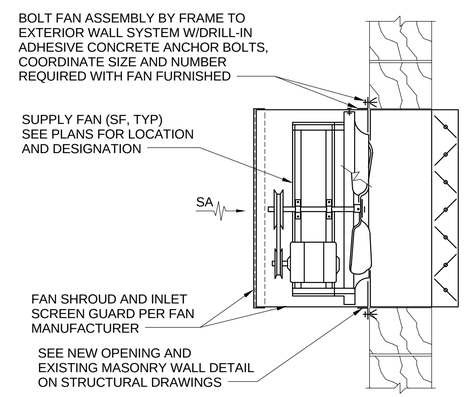

DETAIL 9

EF04 - SIDE WALL PROPELLER FAN

NOT TO SCALE

BURNS McDONNELL
3650 MANSELL ROAD, SUITE 300
ALPHARETTA, GA 30022
770-587-4776
1234567890

CITICO PUMP RELIABILITY IMPROVEMENTS

CITY OF CHATTANOOGA, TN

CONSENT DECREE PROGRAM

REV	DATE	REVISION DESCRIPTION
0	05/15/17	ISSUED FOR CONSTRUCTION

THIS LINE IS ONE INCH LONG WHEN PLOTTED FULL SCALE

THIS DRAWING MUST BE USED IN CONJUNCTION WITH THE APPLICABLE OR GOVERNING TECHNICAL SPECIFICATIONS AND OTHER CONTRACT DOCUMENTS.

PROJECT NO: 95307

DATE: 04/14/17

DISC. LEAD:	DESIGNER:	CHECKER:
JKP	JLB/BJH	JKP

SHEET TITLE

MECHANICAL

HVAC DETAILS

SHEET **M503** REV **0**

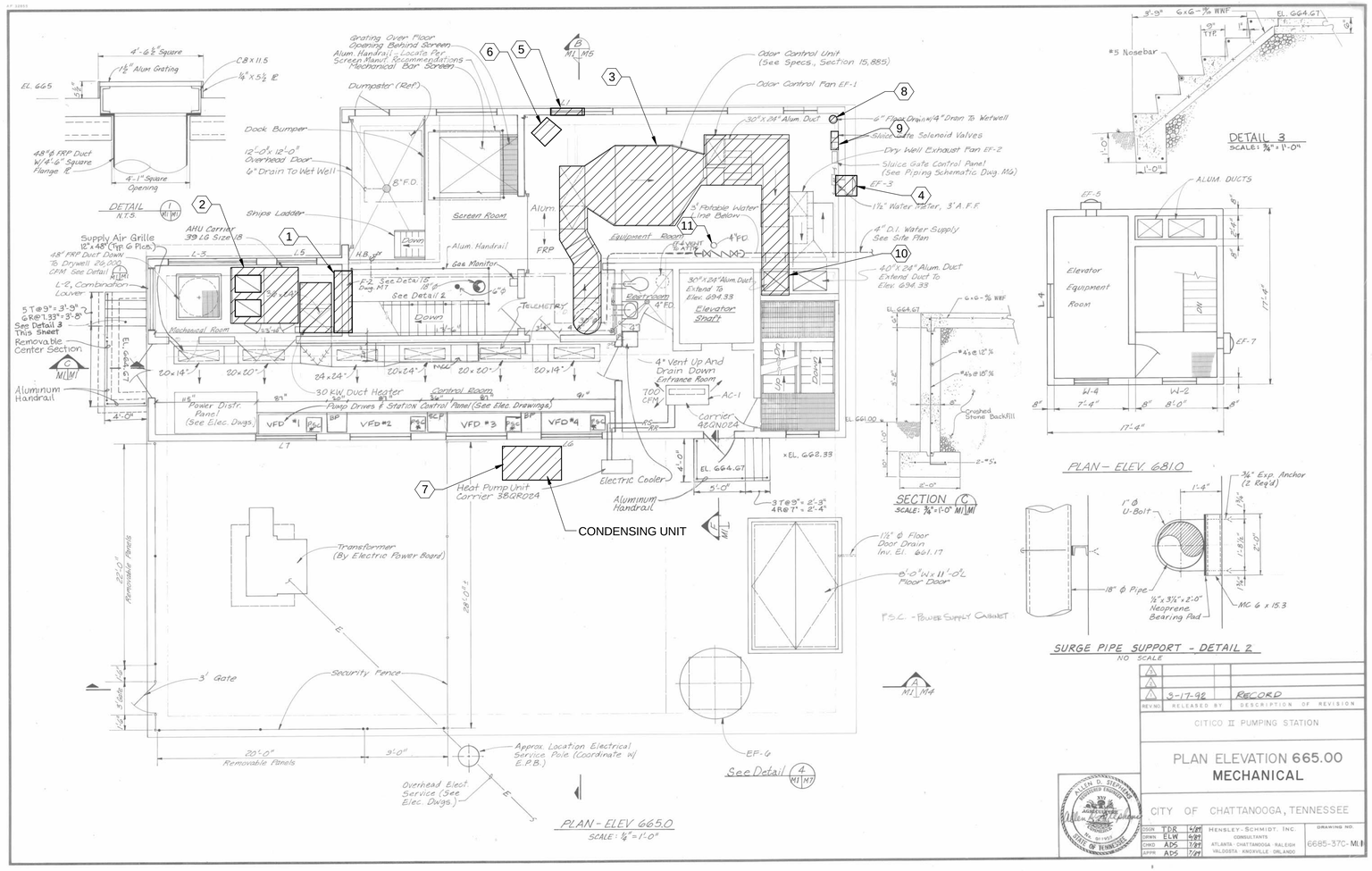

GENERAL NOTES:

1. BEFORE DEMOLISHING THE EXISTING ODOR CONTROL SYSTEM. THE NEW ODOR CONTROL SYSTEM SHALL BE INSTALLED AND OPERATIONAL.
2. PRIOR TO DEMOLISHING F-2 INSTALL A TEMPORARY SUPPLY FAN TO PROVIDE CONTINUOUS VENTILATION AT A MINIMUM OF 10,100 CFM TO THE SCREEN ROOM AND WET WELL. THE TEMPORARY SUPPLY AIR SYSTEM SHALL BE TURNED OFF AND REMOVED ONLY AFTER THE NEW SUPPLY FAN PS-SF-002 IS INSTALLED AND RUNNING CONTINUOUSLY.

KEYED NOTES:

1. DEMOLISH EXISTING SUPPLY FAN F-2, SUPPORTS, CABLE, CONDUIT, AND CONTROLS.
2. DEMOLISH EXISTING AIR HANDLING UNIT, REFRIGERANT LINES, CABLE CONDUIT, AND CONTROLS.
3. DEMOLISH EXISTING ODOR CONTROL UNIT, DUCTWORK, FAN EF-1, CABLE CONDUIT, AND CONTROLS.
4. DEMOLISH EXISTING EXHAUST FAN EF-3, SUPPORTS, CABLE CONDUIT, AND CONTROLS, SEE TYPICAL MASONRY INFILL DETAIL ON SHEET S504.
5. DEMOLISH EXISTING LOUVER, CONTROL DAMPER, CABLE CONDUIT AND CONTROLS, SEE TYPICAL MASONRY INFILL ON SHEET S504.
6. DEMOLISH EXISTING UNIT HEATER, CABLE CONDUIT, AND CONTROLS.
7. DEMOLISH EXISTING CARRIER CONDENSING UNIT, REFRIGERANT LINE, CABLE CONDUIT, AND CONTROLS.
8. DEMOLISH AND FILL IN FLOOR DRAIN WITH NON-SHRINK GROUT.
9. DEMOLISH SLUICE GATE VALVES AND 3" WATER LINE BETWEEN SLUICE GATE VALVE AND EXISTING BFP. CAP LINE AT BFP.
10. DEMOLISH EXISTING ODOR CONTROL DUCT WORK ALL THE WAY UP THROUGH THE CHIMNEY. INFILL EXISTING WALL PENETRATION AS SHOWN ON TYPICAL MASONRY INFILL DETAIL DWG S504. INFILL CHIMNEY ODOR CONTROL DUCT OPENING AS SHOW DWG S306(SIM).
11. DEMOLISH EXISTING 4" FLOOR DRAIN AND INSTALL NEW 4" FLOOR DRAIN WITH TRAP PRIMER PER DRAWING M101.

BURNS McDONNELL THE REGISTRANT OF THE NEWLY APPLIED SEAL, DATED _____, ONLY ASSUMES RESPONSIBILITY FOR THE CHANGES AS INDICATED ON BURNS & McDONNELL DRAWING _____ REVISION _____.

BRYCE JOSEPH DICKMEYER REGISTERED ENGINEER AGRICULTURE NUMBER 116241 STATE OF TENNESSEE 5/16/17

BURNS McDONNELL
3650 MANSELL ROAD, SUITE 300
ALPHARETTA, GA 30022
770-587-4776
1234567890

CITICO PUMP RELIABILITY IMPROVEMENTS
CITY OF CHATTANOOGA, TN
CONSENT DECREE PROGRAM

REV	DATE	REVISION DESCRIPTION
0	05/15/17	ISSUED FOR CONSTRUCTION

THIS LINE _____ IS ONE INCH LONG WHEN PLOTTED FULL SCALE

THIS DRAWING MUST BE USED IN CONJUNCTION WITH THE APPLICABLE OR GOVERNING TECHNICAL SPECIFICATIONS AND OTHER CONTRACT DOCUMENTS.

PROJECT NO: 95307
DATE: 04/14/17

DISC. LEAD:	DESIGNER:	CHECKER:
JKP	JLB/BJH	JKP

SHEET TITLE
MECHANICAL

HVAC DEMOLITION PLAN

SHEET M701 REV 0

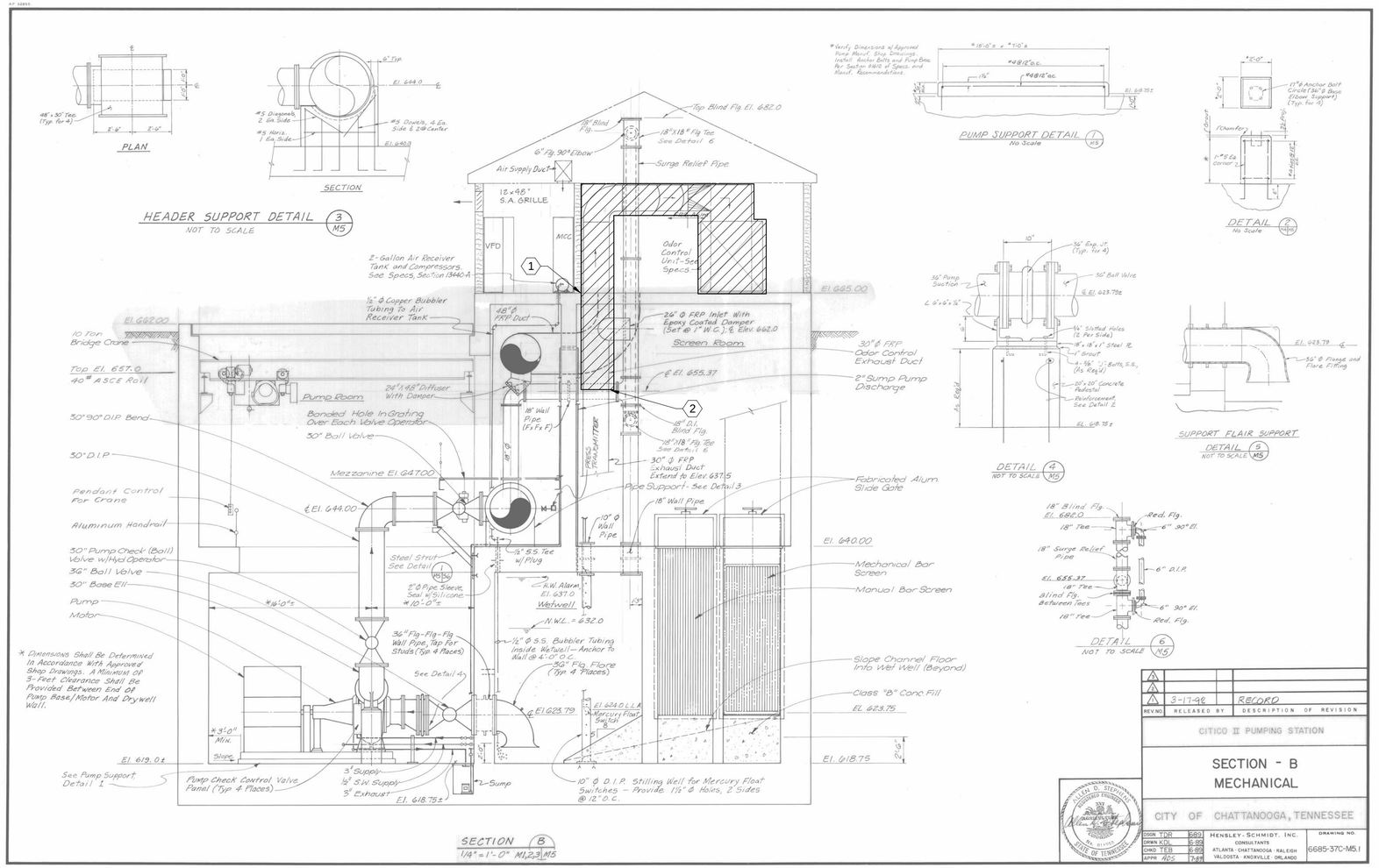

REV NO.	RELEASED BY	DESCRIPTION OF REVISION
1		
2		
3	3-17-98	RECORD

CITICO II PUMPING STATION

SECTION - B
MECHANICAL

CITY OF CHATTANOOGA, TENNESSEE

DSGN TOR	5-89	HENSLEY-SCHMIDT, INC. CONSULTANTS
DRWN KDL	10-89	ATLANTA · CHATTANOOGA · RALEIGH
CHKD TEB	10-89	VALDOSTA · KNOXVILLE · ORLANDO
APPR RDS	7-89	

DRAWING NO. 6685-37C-M5.1

GENERAL NOTES:

1. SEE M103 FOR NEW ODOR CONTROL CONNECTION AND DUCTWORK ROUTING.

KEYED NOTES:

1. SEE DWG S306 FOR CONCRETE OPENING INFILL DETAIL.
2. MAKE NEW CONNECTION AND INSTALL NEW DUCTWORK PER M301.

BURNS McDONNELL
3650 MANSELL ROAD, SUITE 300
ALPHARETTA, GA 30022
770-587-4776
1234567890

CITICO PUMP RELIABILITY IMPROVEMENTS
CITY OF CHATTANOOGA, TN
CONSENT DECREE PROGRAM

REV	DATE	REVISION DESCRIPTION
0	05/15/17	ISSUED FOR CONSTRUCTION

THIS LINE ↔ IS ONE INCH LONG WHEN PLOTTED FULL SCALE

THIS DRAWING MUST BE USED IN CONJUNCTION WITH THE APPLICABLE OR GOVERNING TECHNICAL SPECIFICATIONS AND OTHER CONTRACT DOCUMENTS.

PROJECT NO: 95307

DATE: 04/14/17

DISC. LEAD:	DESIGNER:	CHECKER:
JKP	JLB/BJH	JKP

SHEET TITLE
MECHANICAL

HVAC DEMOLITION SECTION

SHEET M702 REV 0

BURNS McDONNELL THE REGISTRANT OF THE NEWLY APPLIED SEAL, DATED _____, ONLY ASSUMES RESPONSIBILITY FOR THE CHANGES AS INDICATED ON BURNS & McDONNELL DRAWING _____ REVISION _____.

BRYCE JOSEPH DICKMEYER REGISTERED ENGINEER AGRICULTURE COMMERCE No. 116341 5/16/17 STATE OF TENNESSEE